Rear Elevation

1/4" = 1'-0"

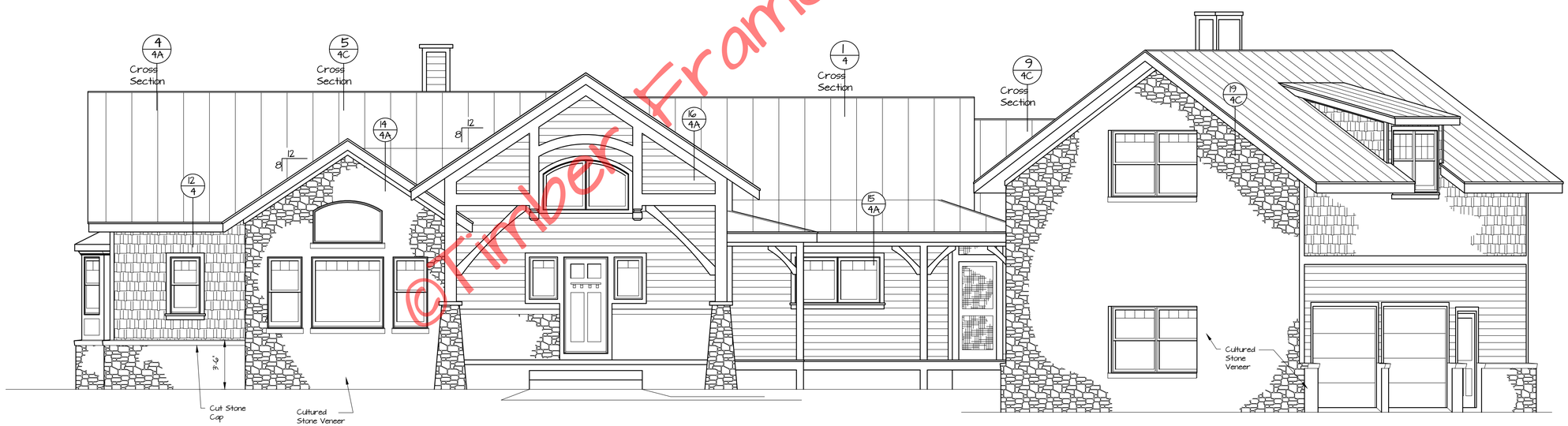

Front Elevation

1/4" = 1'-0"

©Timber Frame Homes, Inc. 2007

Maggie Valley
Elevations

SCALE: Noted
DATE: 1-30-08
FILE NO.: 0801
DRAWN BY: MAW/GB
SHEET NUMBER: 1

Timber Frame Homes

Copyright 2007 by Timber Frame Homes, Inc.
All Federal, state, and local codes, ordinance, regulations etc. shall be considered as part of specifications. For this building and shall take precedence over anything shown, described, or implied where same are at variance. All dimensions and conditions shall be verified on site by builder.

REVISIONS

NO.	DATE	REMARKS	BY
1	3-19-08	Final	MAW
2	4-1-08	Change Front Entry Door & Wdo's	MAW

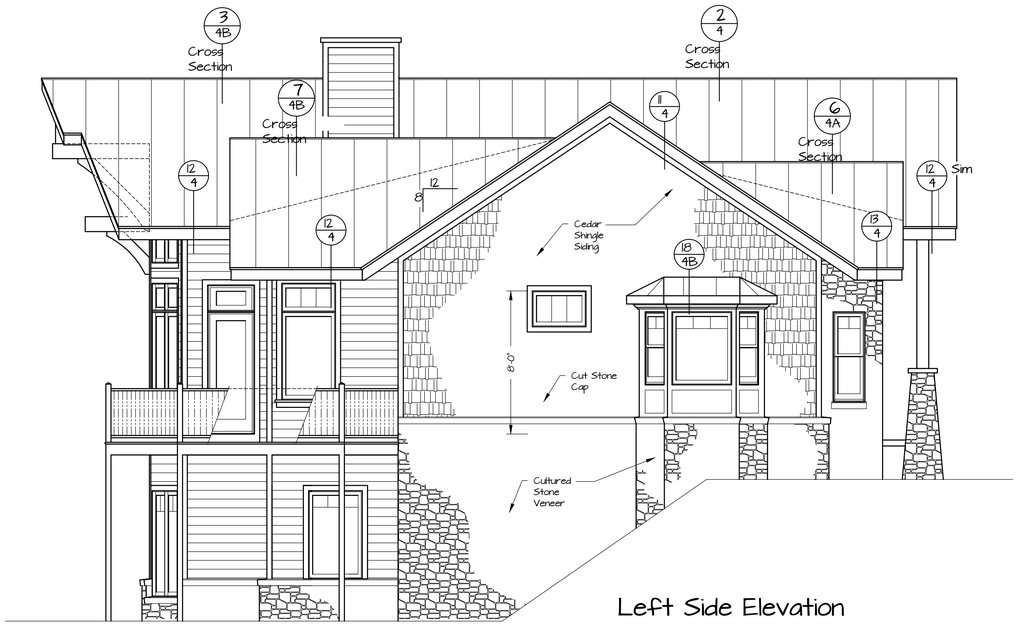

Left Side Elevation
1/4" = 1'-0"

Right Side Elevation
1/4" = 1'-0"

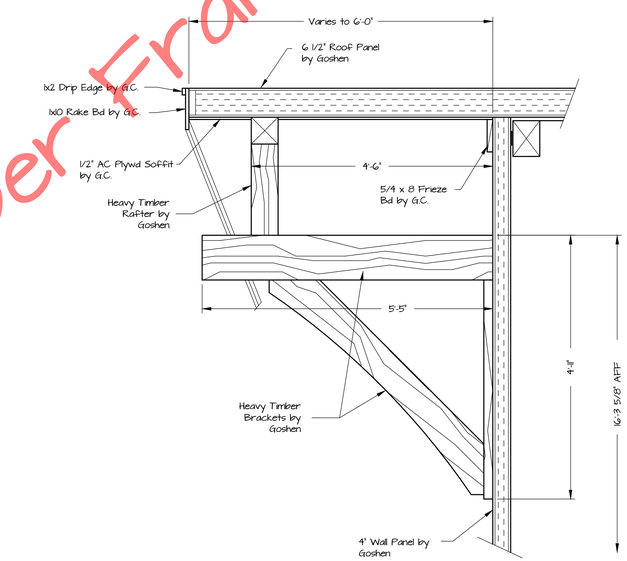

23/1 Rake Detail
3/4" = 1'-0"

©Timber Frame Homes, Inc. 2007

Maggie Valley
Elevations

SCALE: Noted
DATE: 1-30-08
FILE NO.
DRAWN BY: MAW/GB
SHEET NUMBER: 0801 1A

Timber Frame Homes

Copyright 2007 by Timber Frame Homes, Inc.
All Federal, state, and local codes, ordinance, regulations etc. shall be considered as part of specifications. For this building and shall take precedence over anything shown, described, or implied where same are at variance. All dimensions and conditions shall be verified on site by builder.

REVISIONS

NO.	DATE	REMARKS	BY
1	3-19-08	Final	MAW

Maggie Valley 1A

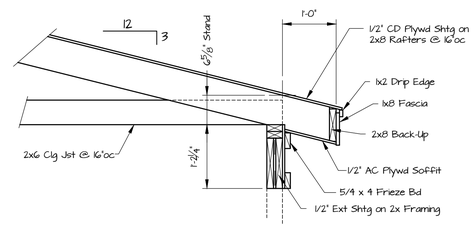

20 / 1B Eave Detail
3/4" = 1'-0"

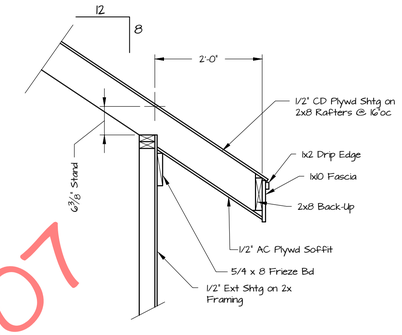

21 / 1B Eave Detail
3/4" = 1'-0"

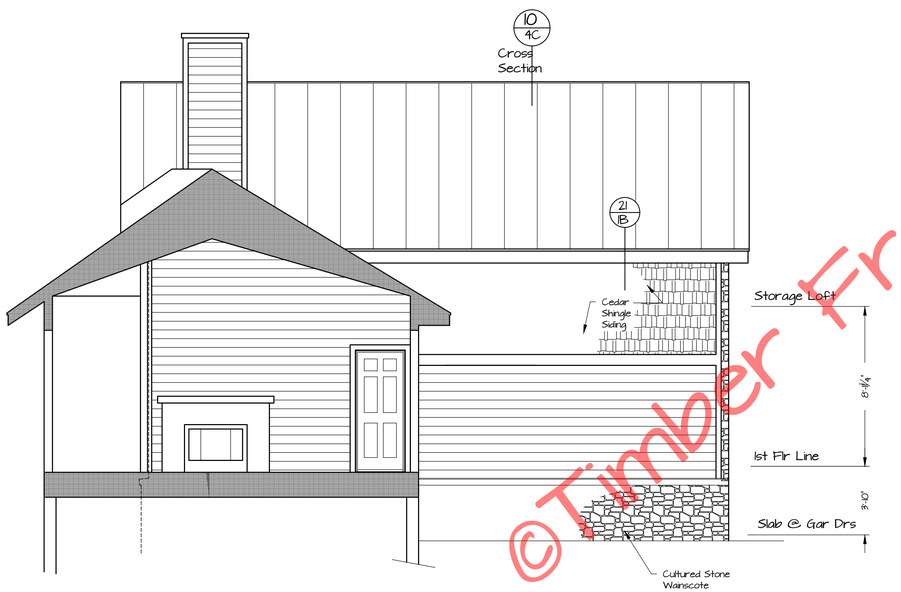

Garage Left Side Elevation
1/4" = 1'-0"

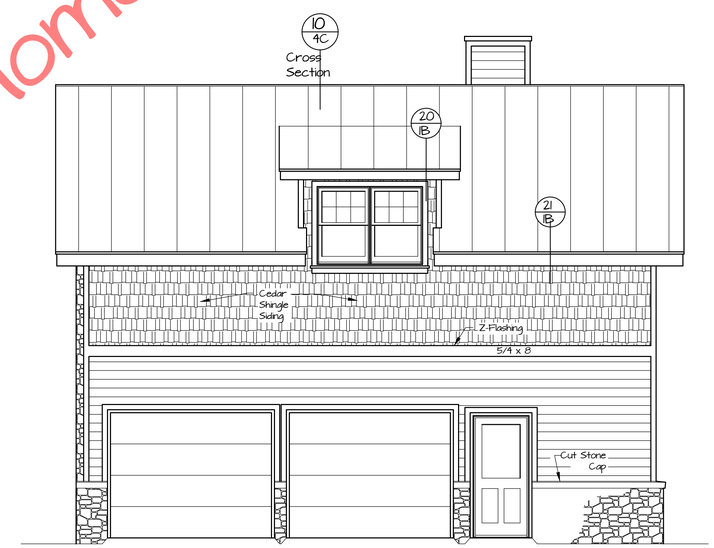

Garage Right Side Elevation
1/4" = 1'-0"

©Timber Frame Homes, Inc. 2007

Maggie Valley
Elevations

SCALE: Noted
DATE: 1-30-08
FILE NO.: 0801
DRAWN BY: MAW/GB
SHEET NUMBER: 1B

Timber Frame Homes

Copyright 2007 by Timber Frame Homes, Inc.
All federal, state, and local codes, ordinance, regulations etc. shall be considered as part of specifications for this building and shall take precedence over anything shown, described, or implied where same are at variance. All dimensions and conditions shall be verified on site by builder.

REVISIONS

NO.	DATE	REMARKS	BY
1	3-19-08	Final	MAW

Maggie Valley 1B

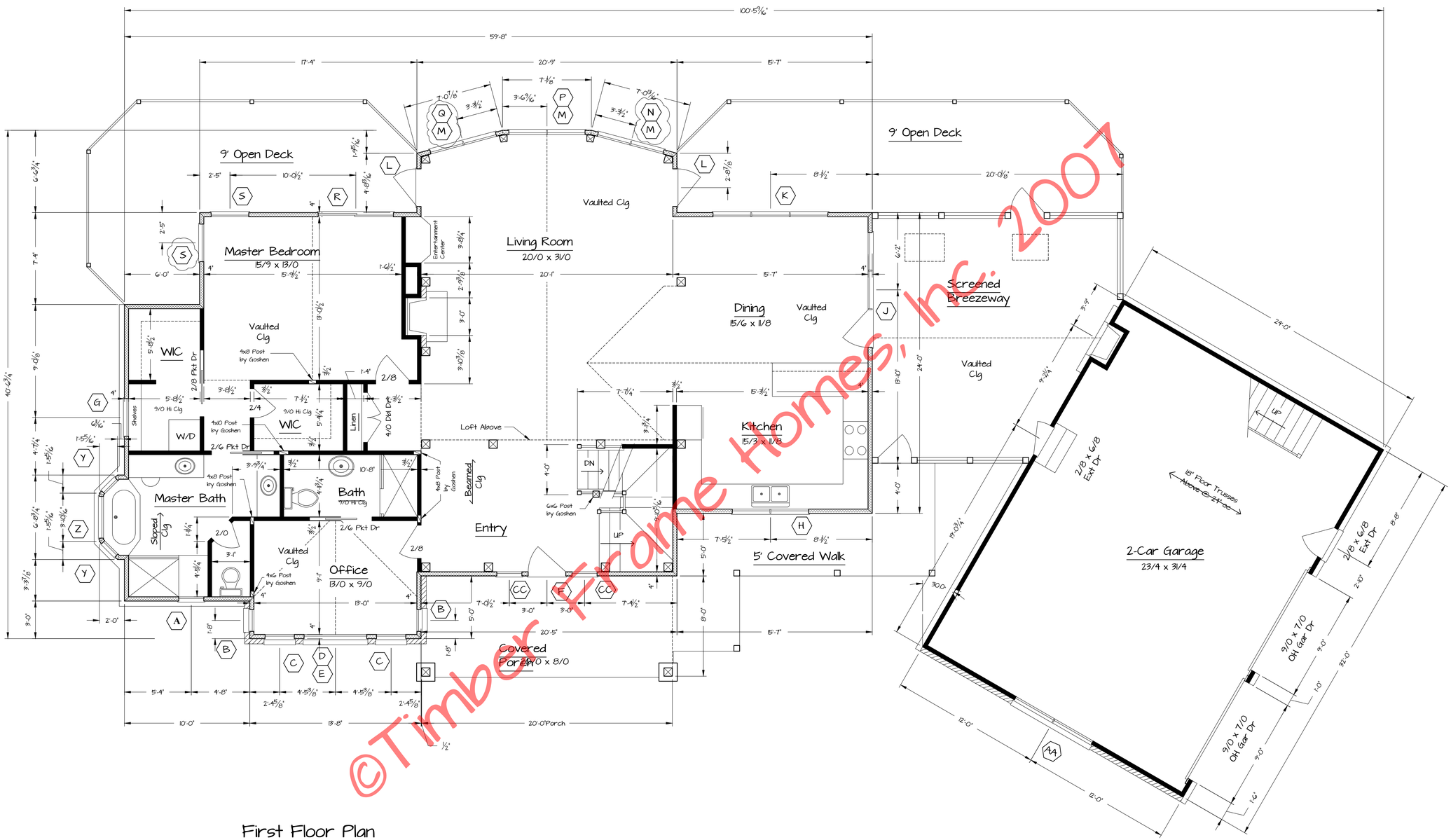

©Timber Frame Homes, Inc. 2007

First Floor Plan

1,831 sf Living Area 1/4" = 1'-0"

1. 'Jeld-Wen' WINDOW NOMENCLATURE

2. EXTERIOR WALLS ARE 4" 'Structural INSULATED PANELS' (R-24) by GOSHEN

3. INTERIOR WALLS ARE NON-BEARING, 2X4 CONSTRUCTION by G.C. UNLESS OTHERWISE NOTED

4. THE TIMBER FRAME IS #2 EASTERN WHITE PINE or BETTER, CUT , FIT AND RAISED by GOSHEN

Maggie Valley
Floor Plans

SCALE: Noted
DATE: 1-30-08
FILE NO.: 0801
DRAWN BY: MAW/GB
SHEET NUMBER: 2

Timber Frame Homes

Copyright 2007 by Timber Frame Homes, Inc.

All Federal, state, and local codes, ordinance, regulations etc. shall be considered as part of specifications for this building and shall take precedence over anything shown, described, or implied where same are at variance. All dimensions and conditions shall be verified on site by builder.

REVISIONS

NO.	DATE	REMARKS	BY
1	3-19-08	Final	MAW
2	3-19-08	Wide	MAW
3	4-1-08	Front Door, Add Wide's C.C.	MAW

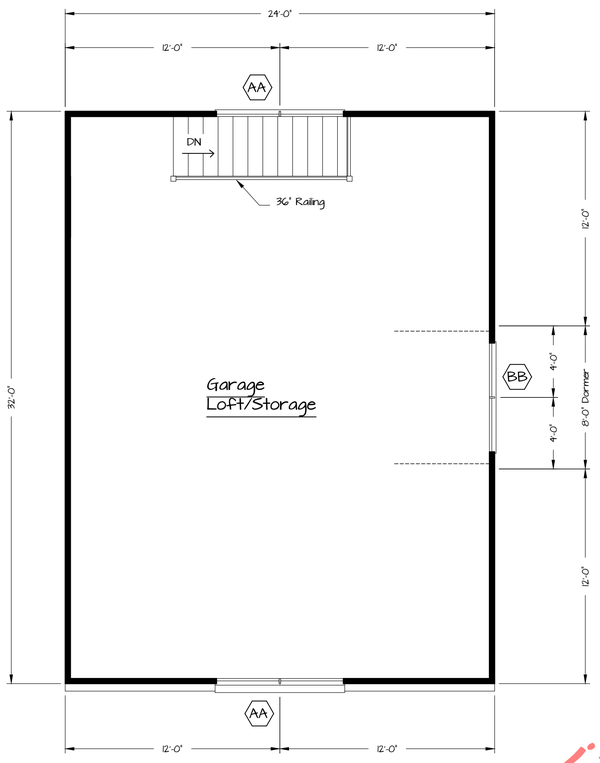

Garage Storage Loft

1/4" = 1'-0"

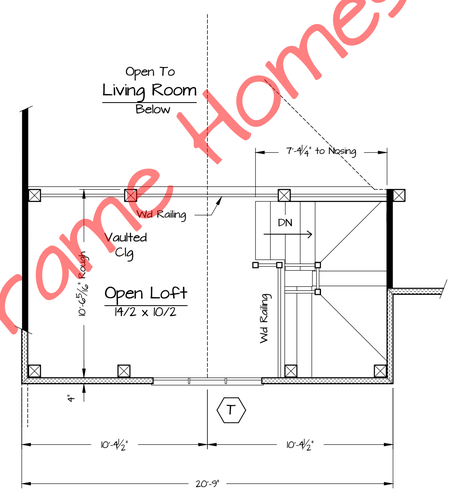

Second Floor Plan

151 sf Living Area 1/4" = 1'-0"

1. 'Jeld-Wen' WINDOW NOMENCLATURE

2. EXTERIOR WALLS ARE 4" 'STRUCTURAL INSULATED PANELS' (R-24) by GOSHEN

3. ROOF CONSISTS OF 6 1/2" 'STRUCTURAL INSULATED PANELS' (R-40) on 1X8 T&G DECKING by GOSHEN

Window Schedule

	Window #	Rough Opening	Qty.	Location
A	ECD2548	26 1/8 x 48 3/4	1	MB
B	ECD2160	22 1/8 x 60 3/4	2	Office
C	ECD2960	30 1/8 x 60 3/4	2	Office
D	ECDPG160	62 1/8 x 60 3/4	1	Office
E	CAESC-60L30	See Below	1	Office
F	3/0 x 6/8 Ext Dr	38 1/2 x 82 3/4	1	Entry
G	ECA3624	36 3/4 x 24 3/4	1	WIC
H	ECC3636-2	72 3/4 x 36 3/4	1	Kit
J	SCHD-9060110	108 3/4 x 83	1	Din
K	ECC3672-3 w/ ECC3618-3	108 3/4 x 90 3/4	1	Din
L	SCHD-2960110 w/ SCHD-2936-1	33 3/4 x 101 1/4	2	LR
M	ECC3654-2 w/ ECC3618-2	72 3/4 x 90 3/4	3	LR
N	Special	See Below	1	LR
P	Special	See Below	1	LR
Q	Special	See Below	1	LR
R	SCS3-6016-1 w/ SCS3-6061	72 3/4 x 101 1/4	1	MBR
S	ECC3660 w/ ECC3618	36 3/4 x 78 3/4	2	MBR
T	ECCS3630-2	See Below	1	Loft
U	ECD3156-3	94 7/8 56 3/4	1	BR2
V	ECC3072-2	60 3/4 x 72 3/4	2	FR
W	SCHD-6061IF	72 3/4 x 83	1	FR
X	ECC3660	36 3/4 x 60 3/4	2	BR3
X2	ECC3660-2	72 3/4 x 60 3/4	1	BR3
Y	ECC1848	18 3/4 x 48 3/4	2	MB
Z	ECC3648	36 3/4 x 48 3/4	1	MB
AA	ECD4152-2	83 1/2 x 52 3/4	3	Gar
BB	ECD3948-2	63 1/2 x 48 3/4	1	Gar Dormer
CC	ECC2436	24 3/4 x 36 3/4	2	Entry

Maggie Valley
Floor Plans

SCALE: Noted
DATE: 1-30-08
FILE NO.: 0801
DRAWN BY: MAW/GB
SHEET NUMBER: 2A

Timber Frame Homes

Copyright 2007 by Timber Frame Homes, Inc.
All federal, state, and local codes, ordinance, regulations etc. shall be considered as part of specifications for this building and shall take precedence over anything shown, described, or implied where same are at variance. All dimensions and conditions shall be verified on site by builder.

REVISIONS

NO.	DATE	REMARKS	BY
1	3-19-08	Final	MAW
2	3-25-08	Wdo Schedule	MAW
3	4-1-08	Add Wdo CC Change Door F	MAW

©Timber Frame Homes, Inc. 2007

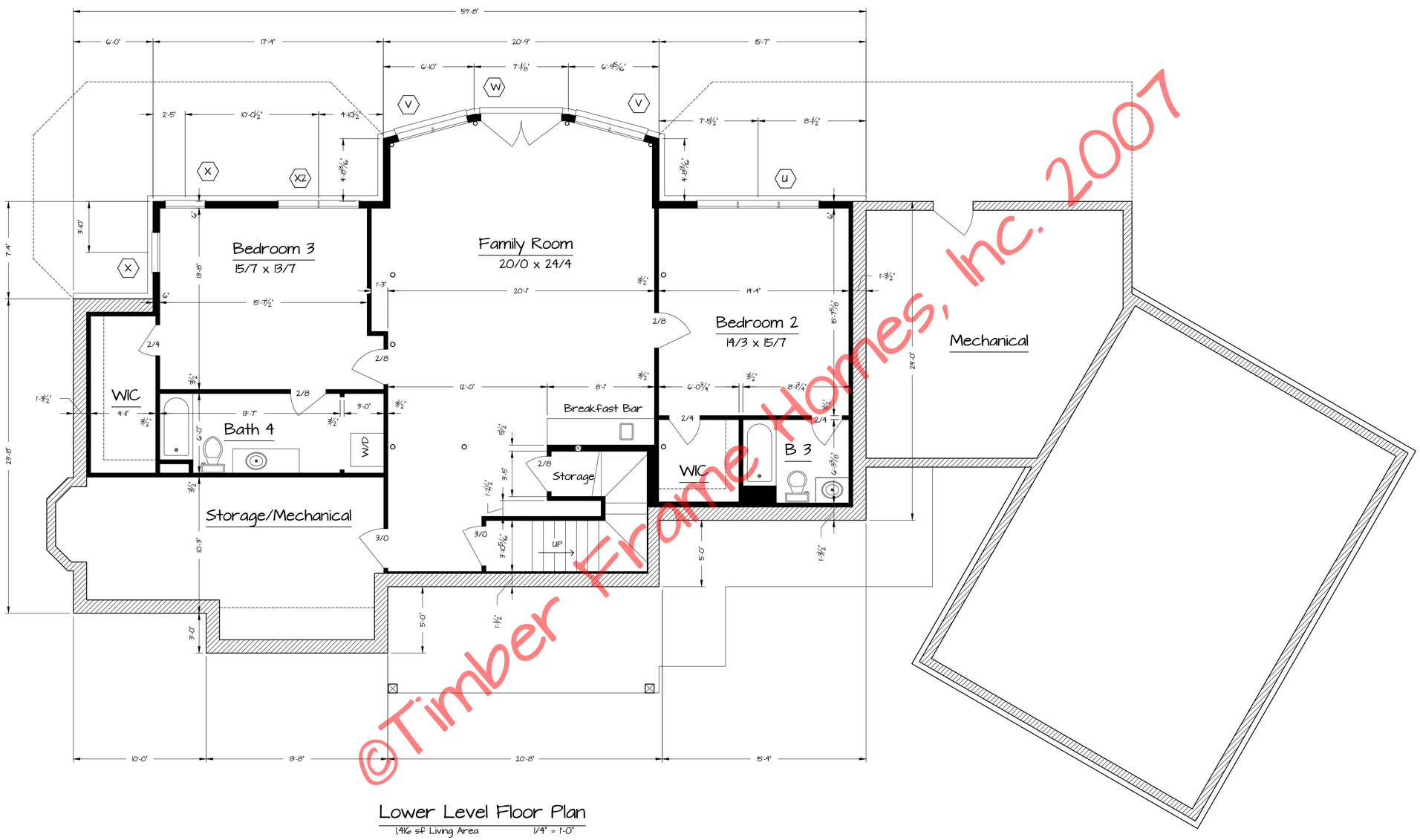

Lower Level Floor Plan

1,416 sF Living Area 1/4" = 1'-0"

©Timber Frame Homes, Inc. 2007

Maggie Valley
Floor Plans

SCALE: Noted
DATE: 1-30-08
FILE NO.
DRAWN BY: MAW/GB
SHEET NUMBER: 2B

0801

Timber Frame Homes

Copyright 2007 by Timber Frame Homes, Inc.
All Federal, state, and local codes, ordinance, regulations etc. shall be considered as part of specifications. For this building and shall take precedence over anything shown, described, or implied where same are at variance. All dimensions and conditions shall be verified on site by builder.

REVISIONS

NO.	DATE	REMARKS	BY
1	3-19-08	Final	MAW

Maggie Valley 2B