rexroth
A Bosch Company

4/3 and 4/2 Proportional directional valve elements with LS (with Cross Piloted Counterbalance or Cross Piloted Check Valves Option)

RE 18301-22
Edition: 02.2022

EDG-DP...B1 – EDG-DP...R1
Component Series 1

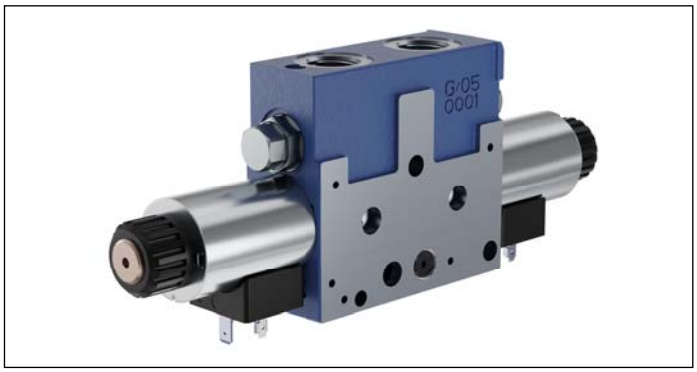

Size 6
Series 1
Maximum operating pressure:
350 bar (5000 psi) on pump side
350 bar (5000 psi) on consumer side
Maximum flow at 6 bar (87 psi) 40 l/min (10.6 gpm)
Ports connections G 3/8 - G 1/2 - SAE6 - SAE8

NEW spool position sensor available for this valve. See RE18300-30

General specifications

The inlet section can be configured for either a fixed displacement pump or load-sense variable displacement pump. When simultaneous machine functions are actuated, the pre-compensators will automatically adjust to the highest load pressure via a shuttle arrangement, making the system circuit independent of variations in loads and pump pressures.

- EDG-DP with Cross Piloted Counterbalance **(B1)** incorporates one or two Cross Piloted Counterbalance valves which allow free flow toward the A and B outlet ports, and lock in a leak free mode the flow returning from the actuator. Pilot pressure in the opposite line reduces the pressure setting of the counterbalance valve in proportion to the pilot ratio (4:1) until opening and allowing the flow return from the actuator. The pressure setting should be at least 1,3 times the highest expected load. Depending on the version selected, the counterbalance function can be double-acting or single-acting (only A ,only B or both A and B ports).
- EDG-DP with Cross Piloted Check Valve **(R1)** incorporates one or two Cross Piloted Check Valves which allow free flow toward the A and B outlet ports, and lock in a leak free mode the flow returning from the actuator, until sufficient pilot pressure is built up in the opposite line and the check valve is opened.

Main Field of Application

Truck mounted applications
Forestry machinery
Forklifts and Telehandler
Municipal vehicles
Cranes
Construction machines
Aerial working platforms
Heavy duty vehicles
Agricultural machines

Contents

New Series 1 features:
- Pole tube and coil (emproved corrosion resistance duration up to 500h)
- Label
- Flange with drain line for VMGLS and combination for EDG Electrohydraulic actuation
- Body valve zinc plating treatment for higher corrosion resistence protection up to 500h

Ordering details

		01	02		03		04	05		06	07	08	09	10	11		12	13		14		15	16		17	18
EDG	**-**	**D**	**P**	**-**	**_ _ _**	**-**	**_**	**2**	**-**	**_**	**_**	**_**	**_**	**_**	**_**	**-**	**_ _**	**_ _**	**-**	**_ _**	**-**	**_**	**_**	**00**	**_ _**	**1**

Family

00	Directional Valve elements EDG Size 6 proportional	**EDG**

Type

01	Direct Acting	**D**

Configuration

02	Proportional	**P**

Ports & Connections

03	G 3/8 DIN 3852	**G38**
	G 1/2 DIN 3852	**G12**
	9/16-18 UNF 2-B (SAE6)	**S06**
	3/4-16 UNF 2-B (SAE8)	**S08**
	Schäfer DN8-10-STH	**R08**

Local compensator bias spring

04	4 bar (58 psi)	**1**
	6 bar (87 psi)	**2**

Flange configuration

05	With P-TA-TB-LS-Xa-Xb-X-Y lines	**2**

Hydraulic connections in neutral

06	P, A, B closed LS to T	**B**
	P closed A, B, LS to T	**E**

Spool variants

07	4/3 operated both sides a and b	**2**
	4/2 operated on side a only	**3**
	4/2 operated on side b only	**4**

Notches dimension selection (from 1 to 9 according to table 1 and table 2)

08	Notch dimension selection P>A	**_**
09	Notch dimension selection P>B	**_**
10	Notch dimension selection (A>T)	**_** [5]
11	Notch dimension selection (B>T)	**_** [5]

Voltage supply

		07	03	01	00	
12	Without coil	–	–	–	●	**00**
	12V DC	●	●	●	–	**OB**
	24V DC	●	●	●	–	**OC**

● = Available – = Not available

Electric connections

13	Without coils	**00**
	With coils, with connection DIN EN 175301-803	**01** [1]
	With coils, with connection vertical Amp - Junior	**03**
	With coils, with connection horizontal DT04-2P	**07**

Secondary valve types

14	Double or single counterbalance valve with 4:1 pilot ratio	**B1** [2][3]
	Double or single piloted check valve with 4:1 pilot ratio and 0,5bar cracking pressure	**R1** [3][4]

Secondary valve config. setting:

15	A>Ta	**_** [2]
16	B>Tb	**_** [4]

Override option & Emergency Lever

17	Push pin type override	**00**
	Push button override on both sides A and B	**EP**
	Screw type override on both sides A and B	**EF**

Component Series

18	Series 1	**1**

1) For mating connectors ordering code see data sheet RE 18325-90.
2) For B1 Selection Secondary valve types: see table 3.
3) Different pilot ratios available (8:1 and 12:1), please contact factory fot further details
4) For R1 Selection Secondary valve types: see table 4
5) **"I"** for only meter in option.

Ordering details

Table 1

Notches dimension selection --> Flow Rate	Local compensator bias spring 4bar	6bar
1 *	4 l/min	6 l/min
2 *	8 l/min	10 l/min
3 *	12 l/min	14 l/min
4 *	16 l/min	18 l/min
6 **	24 l/min	30 l/min
9 **	32 l/min	40 l/min

*Note: standard spool types (symmetrical):
1111 - 2222 - 3333 - 4444 - 6666 - 9999
** Note: with 6 and 9 spool sizes delta pressure values exceed 30 bar (435 psi)

Table 2

Spool size selection guide

		P->A (corresponding A->T same size or "I" size)					
	Notch size	**1**	**2**	**3**	**4**	**6**	**9**
P->B (corresponding B->T same size or "I" size)	**1**	X	X	●	●	●	●
	2	X	X	X	◇	●	●
	3	●	X	X	X	◇	●
	4	●	◇	X	X	X	◇
	6	●	●	◇	X	X	X
	9	●	●	●	◇	X	X

X = Standard spool flow rate configuration
◇ = Special spool flow rate configuration, contact factory
● = Not available

Table 3
Counterbalance valve configuration setting

9										
With valve cavity plugged (Normally closed plug)										
A	**B**	**C**	**D**	**E**	**F**	**G**	**H**	**I**	**J**	**K**
50 bar	60 bar	70 bar	80 bar	90 bar	100 bar	110 bar	120 bar	130 bar	140 bar	150 bar
725 psi	870 psi	1015 psi	1160 psi	1305 psi	1450 psi	1595 psi	1740 psi	1885 psi	2030 psi	2175 psi
L	**M**	**N**	**O**	**P**	**Q**	**R**	**S**	**T**	**U**	**V**	**X**
160 bar	170 bar	180 bar	190 bar	200 bar	210 bar	220 bar	230 bar	240 bar	250 bar	270 bar	290 bar
2320 psi	2465 psi	2611 psi	2756 psi	2901 psi	3046 psi	3191 psi	3336 psi	3481 psi	3626 psi	3916 psi	4206 psi

Note
Pressure levels are set at 5 l/min (1.32 gpm).
For pressure higher than 290 bar (4206 psi), contact factory.

Table 4
R1 secondary valve types

A	**9**
0,5 bar (7.3 psi)	With valve cavity plugged

Hydraulic layout

EDG-DP...B1

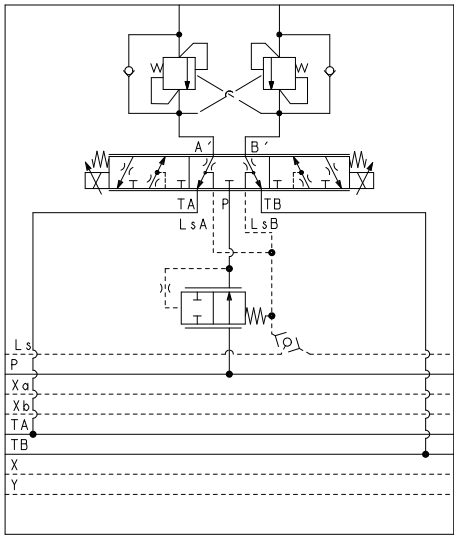

EDG-DP...R1

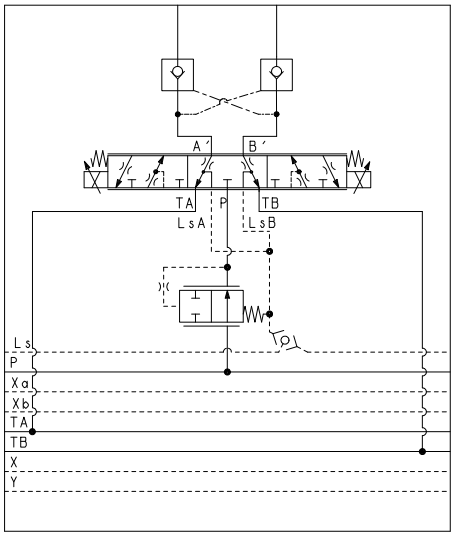

07 - Spool Variants

Both meter in and out

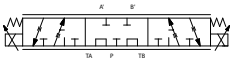
B2

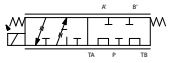
B3

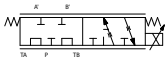
B4

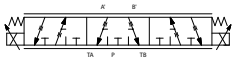
E2

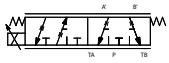
E3


E4

Both meter in and out

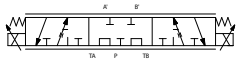
B2_ _II

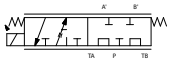
B3_ _II

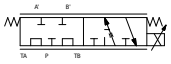
B4_ _II

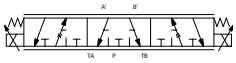
E2_ _II


E3_ _II

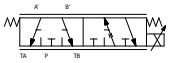
E4_ _II

Functional description

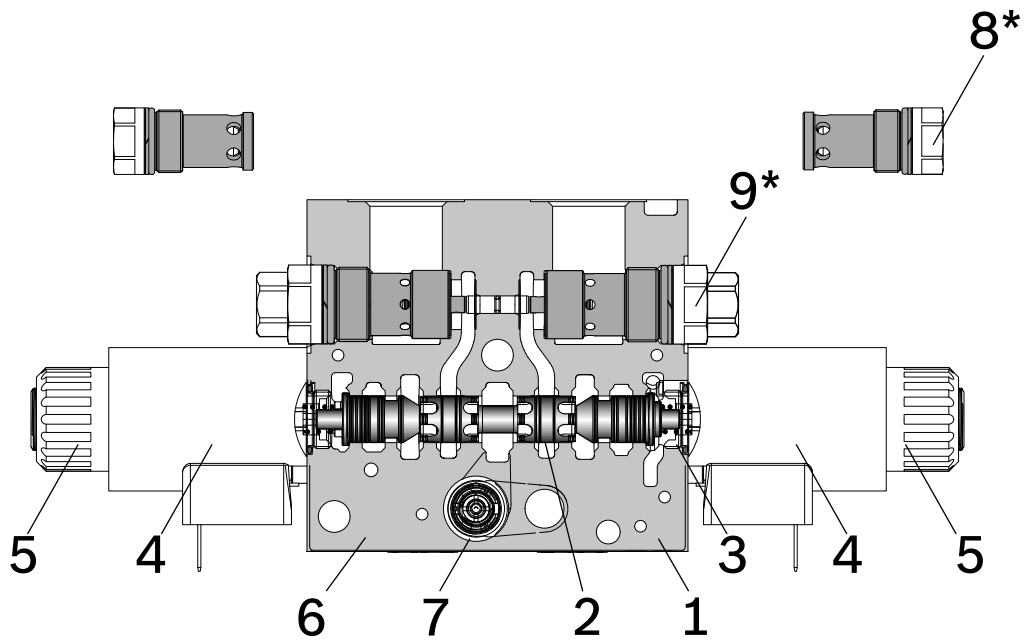

1 Housing.
2 Main spool.
3 Return Spring.
4 Coil.
5 Ring nut.
6 LS shuttle valve.
7 Compensator spool.
8 VSO30 Check cartridge valve.
9 VSD30 Counterbalance cartridge valve.
***** Normally open plug option as alternative to 8 or 9 cartridge selection.
For Both ports A and B.

The EDG direct acting proportional solenoid sectional valves with pressure compensation control the oil flow to actuators. These elements consist of a stackable housing (**1**) with a control spool (**2**), two solenoids (**4**), two return springs (**3**). Each solenoid (**4**), energized by PWM regulator, displaces the control spool from its neutral-central position “0” proportionally to the current received. When the spool is shifted and the metering notch is open, flow delivery starts and is controlled by a 2 way pressure compensator(**7**) (P > A; P > B).
When the solenoid is de-energized, the return spring pushes the spool back in its neutral-central position.
Each coil (**4**) is fastened to the solenoid tube by the ring nut (**5**). A push-pin manual override is included to actuate the valve without electrical power as needed.

Load pressure compensation
The pressure compensator (**7**) keeps the pressure differential on the main spool (**2**). The flow to the consumers remains constant, despite varying loads.
The highest load pressure on the pump is signaled via the LS line and the integrated shuttle valve (**6**).
Port relief valves with anti-cavitation function on A and B (**9**) protect the system against pressure peaks and cavitation. LS relief valves (**8**), for each consumer port, can be adjusted according to specific application requirements.

Technical data

General		
Valve element with 2 solenoids	kg (lbs)	2.2 (4.85)
Valve element with 1 solenoid	kg (lbs)	1.7 (3.75)
Ambient Temperature	°C (°F)	-30....+90 (-22....+194)
Hydraulic		
Maximum pressure at P, A and B ports	bar (psi)	350 (5000)
Maximum static pressure at T	bar (psi)	210 (3050) [in case of Emergency Lever option, max. pressure is limited up to 30 bar at T]
Max. regulated flow at 6 bar (87 psi)	l/min (gpm)	40 (10.6)
For E schemes symmetrical spool pattern in neutral position (connection A to T and B to T) E-schemes flow pattern with only meter IN (spool type E_ _ _ I I)in neutral position: the opening area is approx the 50% of nominal cross-section. This spool type is suitable in combination with load holding valves applications.		Approx. 2% of the nominal cross-section
Hydraulic fluid General properties: it must have physical lubricating and chemical properties suitable for use in hydraulic systems.		Mineral oil based hydraulic fluids HL (DIN 51524 part 1). Mineral oil based hydraulic fluids HLP (DIN 51524 part 2). For use of environmentally acceptable fluids (vegetable or polyglycol base) please consult us.
Fluid Temperature	°C (°F)	-30....+100 (-22....+212) (NBR seals)
Permissible degree of fluid contamination		ISO 4572: $\beta_x \geq 75$ X=12...15 ISO 4406: class 20/18/15 NAS 1638: class 9
Viscosity range	mm^2/s	20....380 (optimal 30....46)
Electrical		
Voltage type	PWM	120 Hz
Voltage tolerance (nominal voltage)	%	-10 .... +10
Duty		Continuous, with ambient temperature ≤ 50°C (122°F)
Coil wire temperature not to be exceeded	°C (°F)	180 (356)
Insulation class		H
Compliance with		Low Voltage Directive LVD 73/23/EC (2006/95/EC), 2004/108/EC
Coil weight	kg (lbs)	0.228 (0.503)
Voltage	V	12 24
Nominal 100% current	A	1.76 0.94
Nominal Coil Resistance at 20°C (68°F)	Ω	4.05 13.6

Note
For applications with different specifications consult us.
* In addition to relief valve pressure setting value.

Code	Voltage [V]	Connector type	Coil description	Marking	Coil Mat no.
=OB 01	12 DC	EN 175301-803 (Ex. DIN 43650)	C37 01	12 DC	R930077022
=OB 03	12 DC	AMP JUNIOR	C37 03	12 DC	R930063954
=OB 07	12 DC	DEUTSCH DT 04-2P	C37 07	12 DC	R930077020
=OC 01	24 DC	EN 175301-803 (Ex. DIN 43650)	C37 01	24 DC	R930077023
=OC 03	24 DC	AMP JUNIOR	C37 03	24 DC	R930063955
=OC 07	24 DC	DEUTSCH DT 04-2P	C37 07	24 DC	R930077021

Characteristic curves

Characteristic curves Q=Q (I) at 4 bar

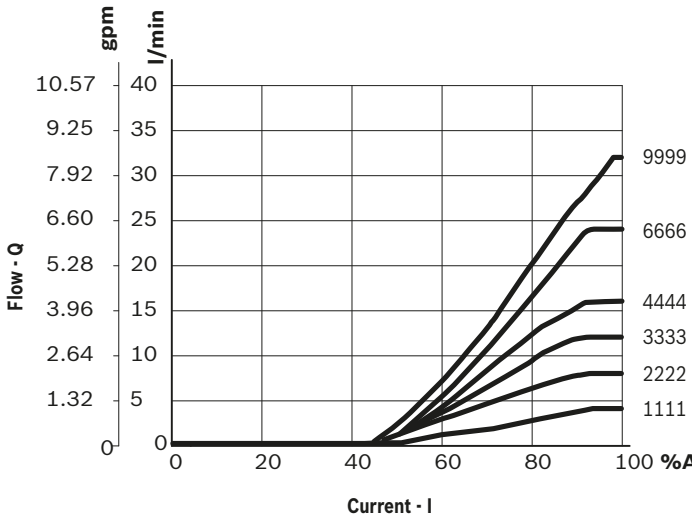

Characteristic curves Q=Q (I) at 6 bar

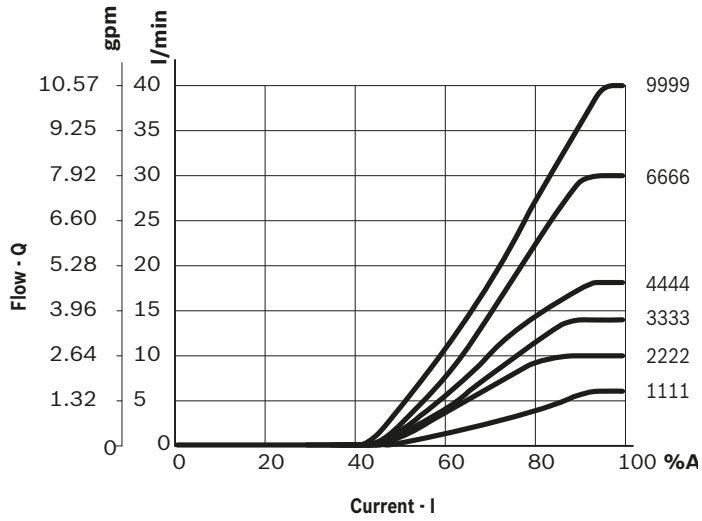

2-way inflow controller

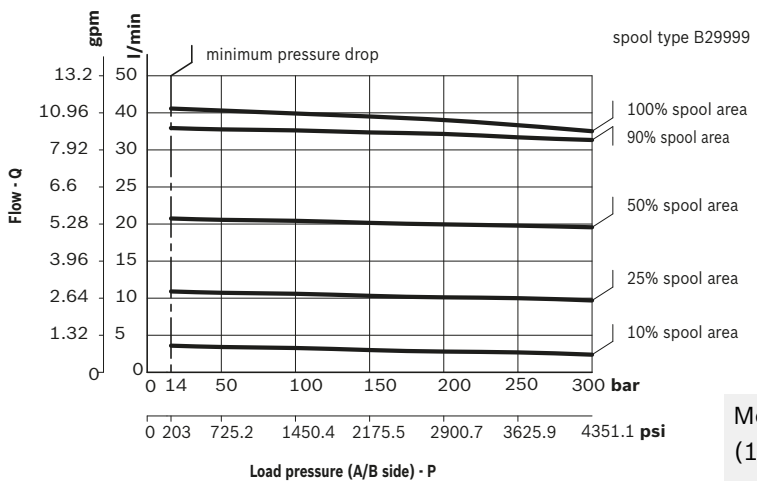

Measured with hydraulic fluid ISO-VG32 at 45° ±5 °C (113° ±9 °F); ambient temperature 20 °C (68 °F).

Characteristic curve for EDG-DP...B1

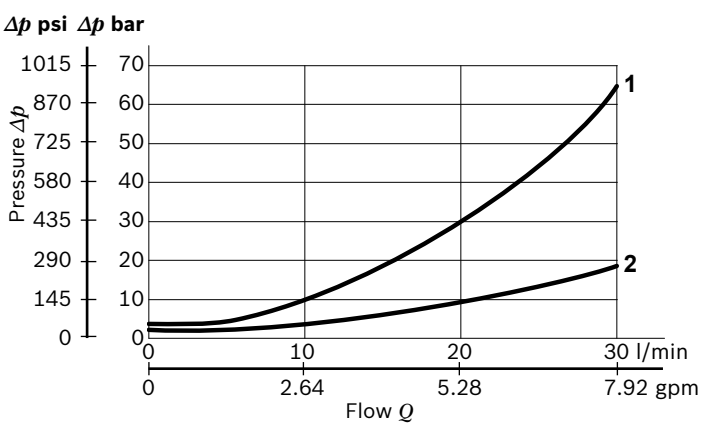

Pressure drop	Curve no.
Fully piloted	1
Through check valve	2

Characteristic curve for EDG-DP...R1

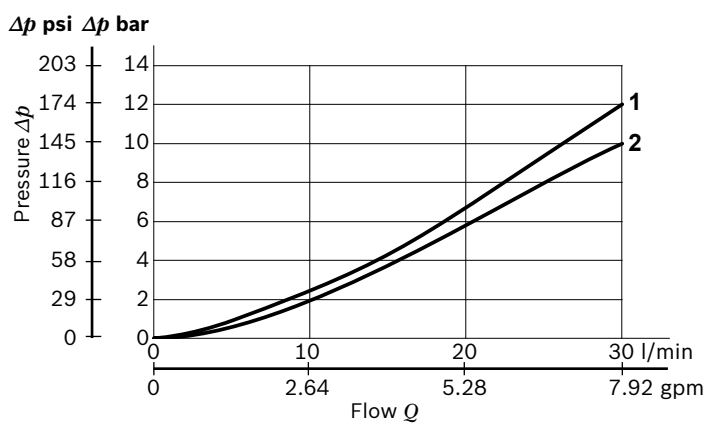

Cracking Pressure	Curve no.
0.5 bar (7.3 psi) free flow	1
Returning flow, fully piloted	2

External dimensions and fittings

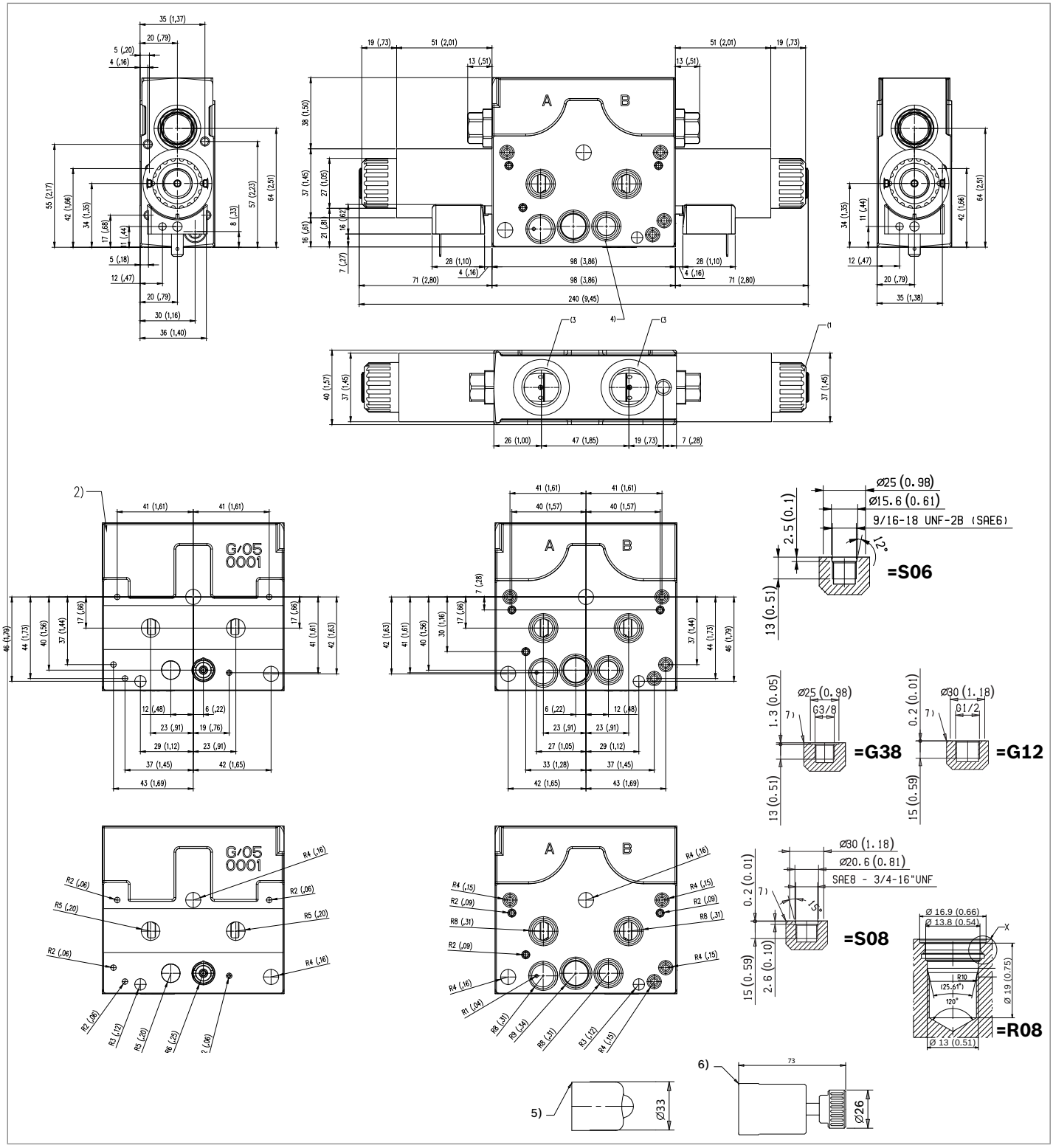

1 Ring nut for coil locking (Ø 30.3 mm).
Torque 6 – 7 Nm (4.4 – 5.2 ft-lb).

2 Flange specifications. For tie rod and tightening torque information see data sheet RE 18301-90.

3 A and B ports.

4 Identification label.

5 Optional push-button manual override, EP type, for spool opening: it is pressure stuck to the ring nut for coil locking.
Mat no. R933002705

6 Optional screw type manual override, EF type, for spool opening: it is screwed (torque 6-7 Nm (4.4-5.2 ft-lb)) to the tube as replacement of the coil ring nut. Mat no. R930084529.

External dimensions for spool with nominal flow 9

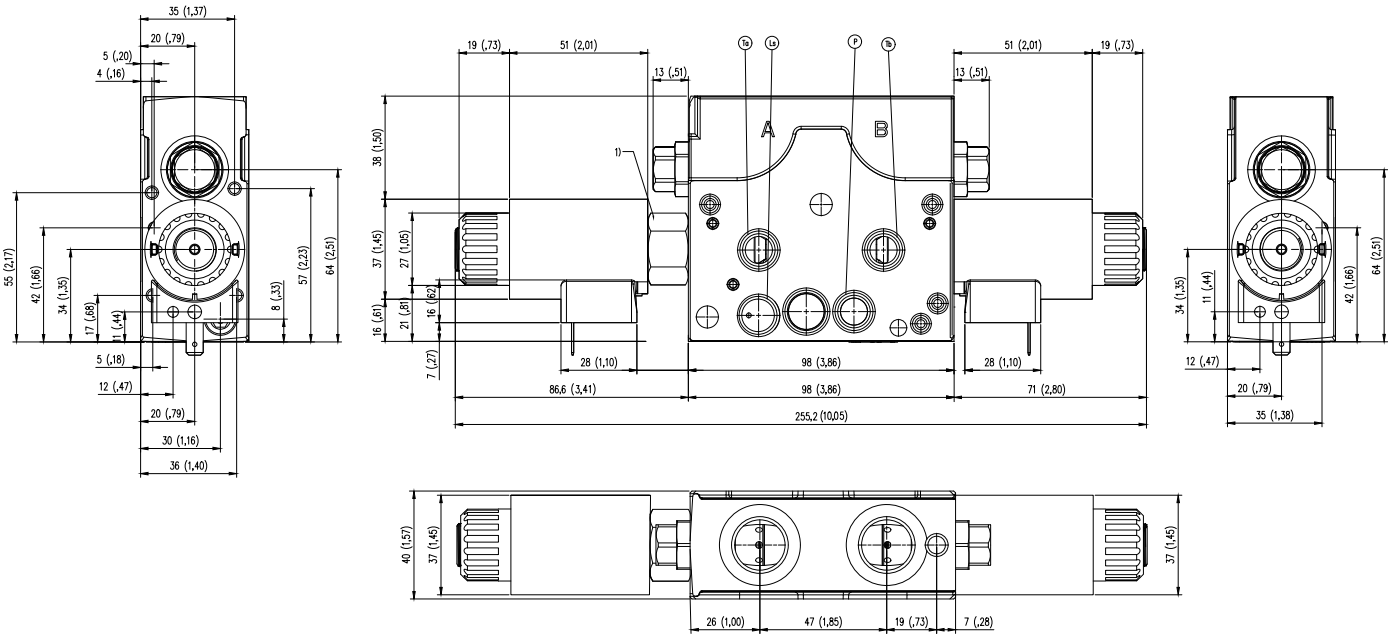

1 Flow-boost system only for spool with nominal flow 9.
It always mounted on "a" side of the valve.

Electric connection

00 without coil

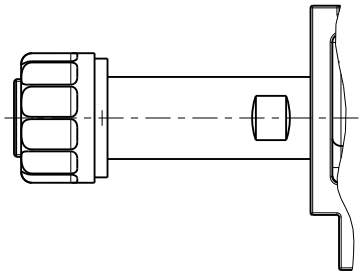

01 Protection class: IP 65 when connector with seal is properly screwed down.

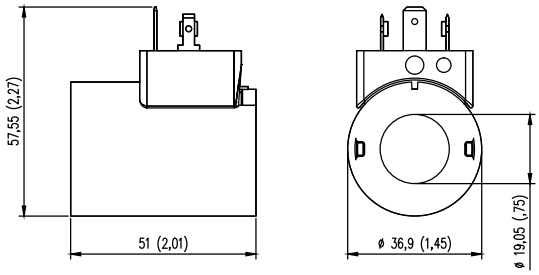

03 Protection class: IP 67 with female connector properly fitted (see drawing).

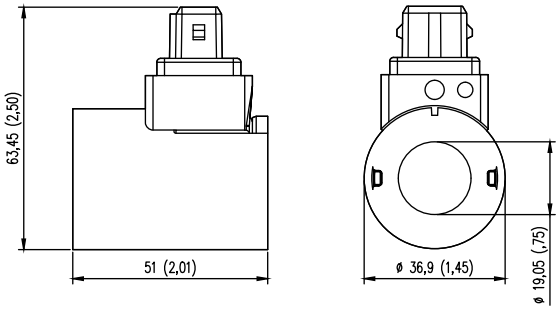

07 Protection class: IP 69K with female connector properly fitted (see drawing).

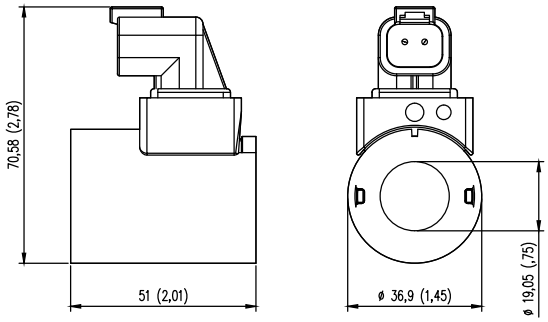

Bosch Rexroth Oil Control S.p.A.
Oleodinamica LC Division
Via Artigianale Sedrio, 12
42030 Vezzano sul Crostolo
Reggio Emilia - Italy
Tel. +39 0522 601 801
Fax +39 0522 606 226 / 601 802
compact-hydraulics-cdv@boschrexroth.com
www.boschrexroth.com/compacthydraulics