Advance Adapters
Atlas 2 Speed Service Manual

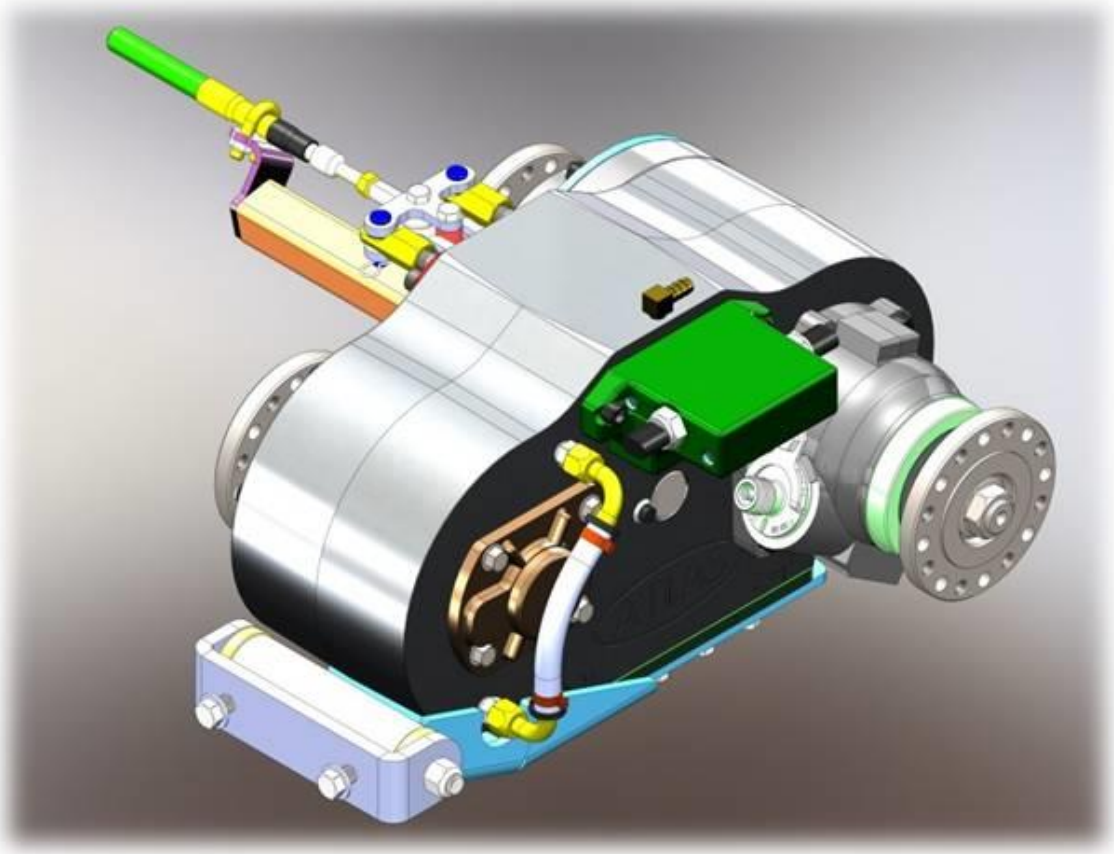

Advance Adapters
4320 Aerotech Center Way
Paso Robles, California
93446 USA
(800) 350-2223
www.AdvanceAdapters.com

Important Notice

The descriptions, specifications, and procedures contained in this service publication are based on the latest product information available at the time of publication approval. Advance Adapters reserves the right to discontinue or modify models, procedures and specifications at any time without notice. Any reference to a brand name in this publication is provided only as an example of the types of tools and materials recommended for use and should not be considered an endorsement. Equivalent products may be used.

Departure from the instructions, choice of tools, specifications, materials and recommended parts mentioned in this publication may jeopardize the personal safety of the service technician or vehicle operator.

and

are registered trademarks of Advance Adapter Inc. All rights reserved. No part of this publication is to be reproduced without prior written permission of Advance Adapters Inc., California USA.

Table of Contents

I	Function and Design	Page 4
	Options	Page 5
	Identification	Page 7
	Power flow diagrams	Page 8
	Lubrication	Page 10
	Maintenance	Page 11
II	Operating Instructions	Page 12
	Towing	Page 13
III	Troubleshooting	Page 14
IV	Removal from Vehicle	Page 16
V	Disassembly	Page 17
	Front output	Page 18
	Input	Page 19
	Rear output	Page 20
	Shift rail housing	Page 21
VI	Cleaning and Inspection	Page 22
VII	Assembly	Page 25
	Front output	Page 26
	Rear output	Page 31
	Input (divorced shown)	Page 36
	Shift rail housing	Page 39
	Final assembly	Page 42
	Front output preload procedure	Page 48
IX	Torque specifications	Page 60
XI	Special service tools (SST)	Page 61

Function and Design

The Advance Adapters Atlas transfer case is designed for vehicles that regularly travel over difficult terrain. The gear-driven transfer case features two-speeds and can be ordered in a variety of different configurations. Be sure to understand which specific options your Atlas transfer case includes before performing service. Some options require different servicing procedures. Direct Drive or High Range is always configured as 1:1 ratio. When maximum traction is not needed, 2WD operation is recommended to prevent wear and tear on non-essential front drive components.

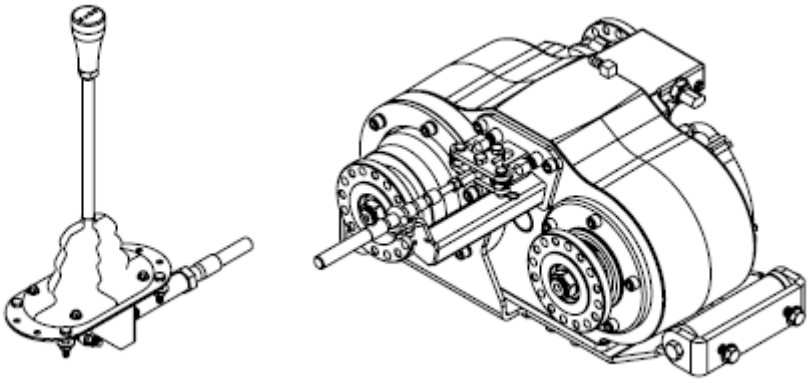

Transfer Case Options:

1. Differential output:
    - Left-driver
    - Right-passenger

2. Low Range Ratio: (Standard and HD)
    - 1.5:1
    - 2.0:1
    - 3.0:1
    - 3.8:1
    - 4.0:1
    - 5.0:1

3. Shifter Type:
    - Single direct lever
    - Dual direct lever
    - Single lever cable shifter
    - Dual lever cable shifter

4. Internal Gears:
    - Standard
    - Competition

5. Output Shafts:
   Front:
    - 32-spline

   Rear: 32 spline
    - Standard
    - HD
    - Short

6. Clocking Options: *** DEPENDING ON TRANSMISSION TAILHOUSING BOLT PATTERN***
   Left:
    - 0,8,15,18,22,25,29,32,39, and 49 degrees

   Right:
    - 0,5,12,15,19,22,26,29, and 36 degrees

7. Yoke Options:

32 Spline:

- 1310
- 1310CV
- 1330CV
- 1350
- 1350CV
- 1410
- 1410U
- 1300 flange
- 1410 flange
- 1480 flange
- Toyota flange

8. Speedometer:

- Mechanical (13T worm with variety of pinion gear counts available
- Electronic(GM VSS and custom_

9. Input Configuration:

- Divorced
- 10-spline
- 21-spline
- 23-spline std, long & short
- 25-spline
- 26-spline 2012 & newer JK
- 27-spline
- 28-spline
- 29-spline also offered in a H.D
- 31-spline
- 32-spline also offered in a H.D
- 35-spline
- 34-spline

Transfer Case Identification

All Atlas transfer cases come with an identification number that correlates to a customer order number. This number can be found on the back of the housing below the cluster pin.

Figure 1

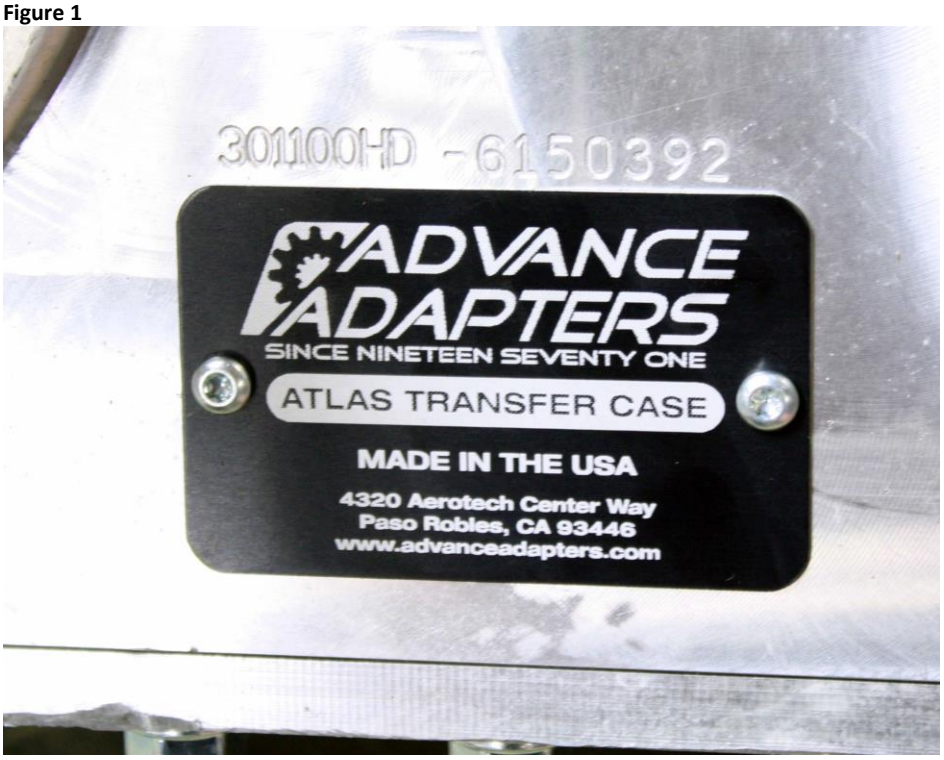

Power Flow Diagrams:

2WD-Hi

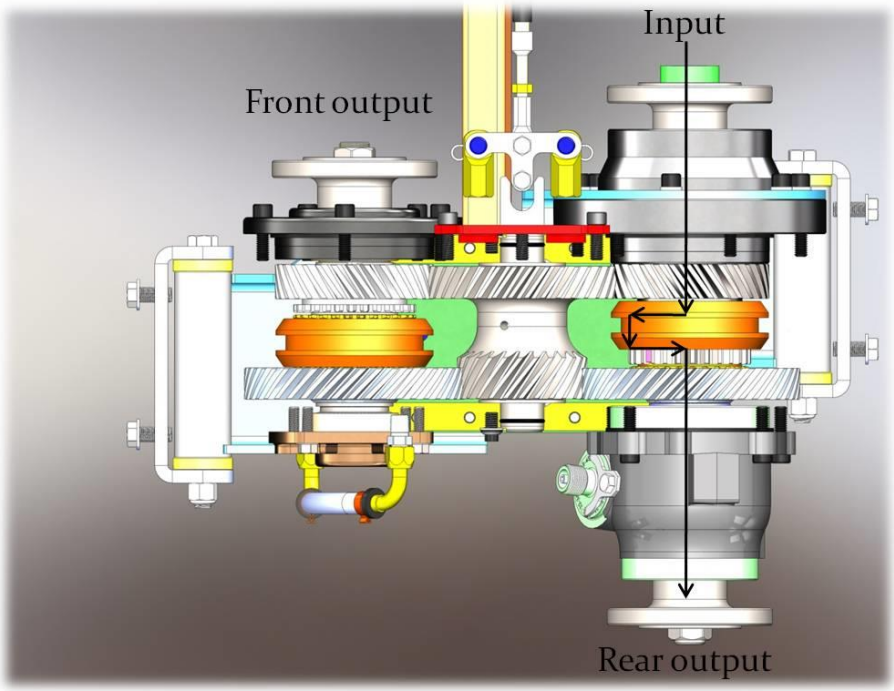

Neutral

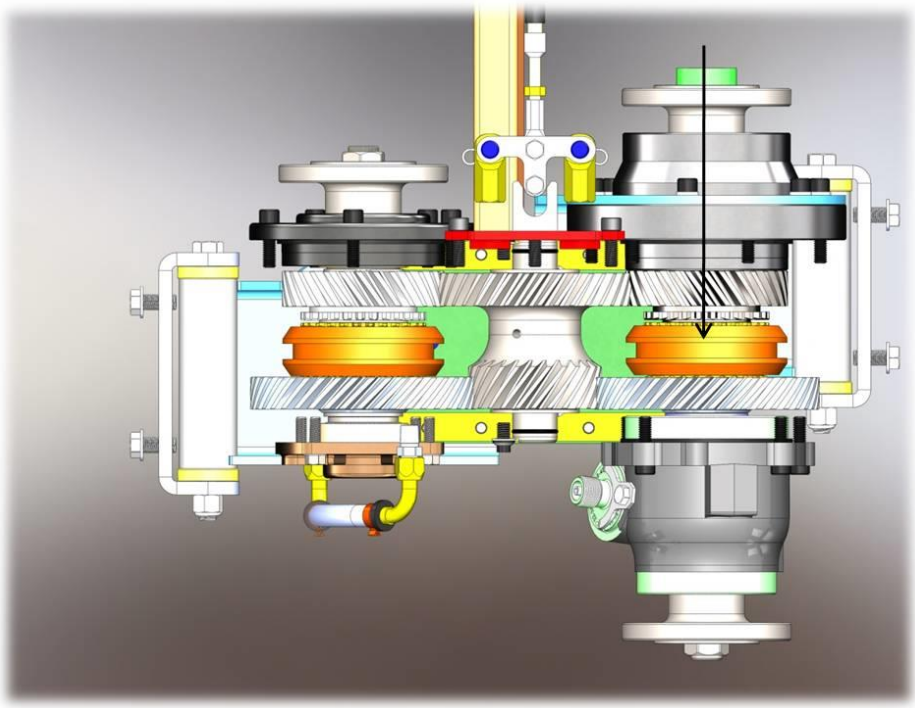

4WD-Hi

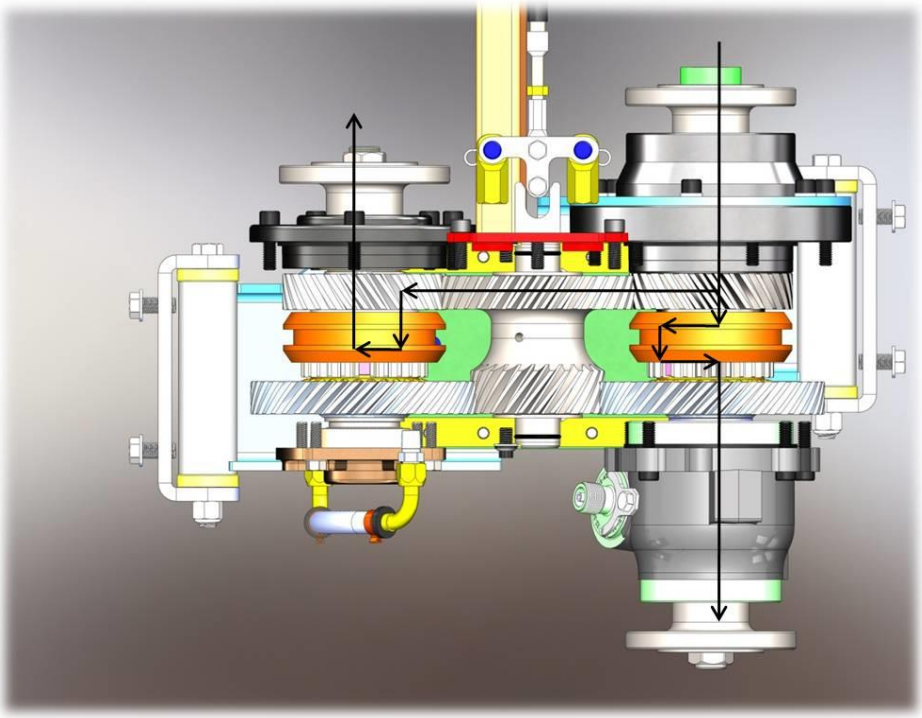

4WD-Low

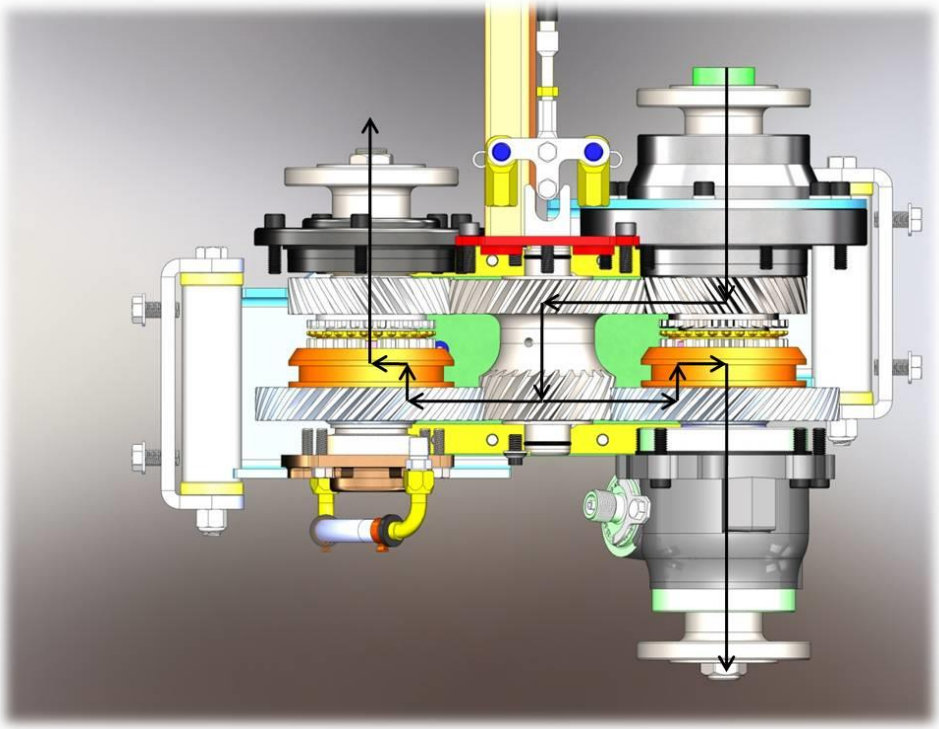

Lubrication Specifications

All Atlas II transfer cases are shipped dry.
All holes are plugged with red plastic caps to keep contaminates out during shipment.

Preferred lubricant: Amsoil MTG GL-4 or any synthetic 75W-90 meeting GL-4 standards and Amsoil Severe Gear SAE 190 fir 1.5:1 units and race applications with other ratios

Capacity:
Quarts: 2.0
Liters: 1.98

The Atlas includes a site tube to help you determine the correct fluid level. Once the required two quarts are installed, we recommend marking the oil level on the site tube.

Operation Temperatures:

Normal Operating Temperature:	160F - 220F Degrees
Max Intermittent Temperature:	220F - 240F Degrees

Lubrication Notes:
Too much fluid will cause foaming at high speeds. Foaming oil expands and fills the entire cavity, which forces fluid out the breather tube; or the breather hose may be restrictive, causing the Atlas to build up pressure.

Advance Adapters recommends a minimum of three feet of 3/8" fuel hose for proper ventilation. This hose should be connected to the brass elbow located on top of the Atlas (Rear shift block).

Your warranty could be voided if the proper gear lubricants are not used and proper oil levels are not maintained.

Maintenance:

Lubricant should be changed:
5000 miles (first time)
Every 15000 miles (thereafter)

Re-torque fasteners:
Check bolt torque on adapter to the Atlas and yokes 1st time 5000 miles, 2nd time 15000 miles (same time as oil).

Checking oil:
Check oil level on level ground.

Drain oil:
Remove lower plug on oil pan or fitting on lower site tube.

Refill:
Install drain plug. Fill lubrication through upper site tube on back side of Atlas or through the fill hole on some units.

Race units:
These units see a complete different type of usage, for these applications please refer to instructions AB2000/AB2001 for service recommendations.

II. Operating Instructions

Shifting an Atlas:
Shifting from High range to Low range:
Verify that the "FRONT" lever is in NEUTRAL.
Bring the vehicle to a speed of about 3-5mph and place the transmission into neutral.
Shift lever into NEUTRAL. Place the transmission back into gear and resume driving.

Shifting from Low range to High range:
Bring the vehicle up to a speed of 5-20mph and shift the transmission into neutral.
Shift transfer case shift lever into neutral.
Apply pressure to lever toward the HIGH position until the Atlas completes the shift into HIGH.
Put the transmission back into gear and resume driving.

What to do if the moving vehicle shift was not successful (shifting while stationary):
Manual Transmission:
Put the transmission into gear (with vehicle still stationary) and feather the clutch while re-attempting the desired shift by holding steady pressure on the shift lever. Repeat as needed.
Automatic Transmission:
Shift the transmission from drive to reverse while maintaining pressure on the transfer case shifter lever. DO NOT SHIFT THE TRANSMISSION INTO PARK. If unsuccessful, turn off the engine with the transmission still in neutral. Now shift the transfer case into gear and re-start the engine.

General notes on Shifting:
The Atlas Transfer Case is a Synchronized gear box. This means that in order for the case to shift easily and smoothly the vehicle must be moving in a forward direction. This will allow the synchronizers to function properly. Note that when the transfer case is shifted when not in motion, the teeth may or may not be aligned. If the teeth are aligned, then the unit will slip into gear easily. If the unit does not slip into gear easily, then no amount of pulling on the lever will cause the unit to shift, under these circumstances. Once the transfer case is allowed to rotate slightly, or the binding is relieved it should slip right into gear.
The Atlas is classified as a Part-Time Transfer case. As with all part-time transfer cases, 4WD should be used in low traction conditions only. Anytime the unit is in 4WD low or 4WD high, the rear output and the front output are locked to each other and can only spin at the exact same speed. This characteristic is essential for extreme off road usage but becomes a hindrance on dry pavement.
When a vehicle turns a corner, the front driveshaft spins at a different speed than the rear driveshaft. This creates a binding in the drive train if the tires cannot slip to relieve this torque. How does this relate to shifting an Atlas? When being operated in high traction conditions, the Atlas will not shift to its potential, especially when shifting out of 4WD. If the transfer case becomes stuck in 4WD, try driving at least half of the vehicle onto a surface that will allow the tires to slip before re-attempting to shift out of 4WD. Deactivating locking differentials (if applicable) will also help in this situation

Towing:
When a vehicle is being towed with the Atlas, the shift levers should be in the Neutral position.

Figure 2-flat towing should be avoided when possible

Figure 3-raised towing is the preferred method

Transmission towing positions are as follows (please also verify in your owner's manual what the vehicle manufacturer recommends):
Automatic transmissions should be left in park.
Manual transmissions should be left in any gear.

III. Troubleshooting

Noisy Operation:

Due to the fact that the Atlas is gear driven, it will typically create more noise than a typical chain driven transfer case. This noise is more noticeable on applications where the direct lever type shifter is used.

Should your Atlas exhibit a new sound, check the oil level and inspect the color of the oil at the sight tube. If oil is low or appears to be contaminated, change it immediately.

Gear wine is typically a result of inadequate lubrication. This can result if a leak occurs or if water or other substance mixes with the lubrication.

If noisy condition is not remedied by oil change, disassembly and inspection of individual wear components is recommended.

Vibration:

Vibrations can come from several areas in the drive train (transmission, drivelines, axles, tires). Such vibrations may be most noticeable at the Atlas shifter if equipped with a direct linkage type shift mechanism. Be sure to check other components prior to the Atlas. In most cases, vibration is the result of a worn component such as a CV driveline or failed transmission mount or isolator.

Improper driveline angles can also result in vibrations. Inspect both front and rear driveline angles in relation to the axle pinion yoke. Driveline angles greater than 4 degrees can cause a noticeable vibration. This type of vibration can be remedied by adjusting axle pinion angle.

Improper driveline angles are responsible for 99.9% of all noises that “seem” to be coming from the Atlas.

If all other components appear to be intact, check the Atlas front and rear output shafts for excessive movement. Improper yoke nut torque may allow a slight amount of in and out movement. Check the yoke nut torque specifications periodically. The 32 splined shafts should be torqued at 150 lb-ft.

Difficulty Shifting:

There are two main reasons an Atlas may be difficult to shift. First, the linkage could be binding. You may need to inspect for possible trouble areas. Refer to the Final Installation section under the subtitle Shifter Problem Checklist for more information.

Notes on shifting:
Shifting the Atlas is an acquired “touch” and “feel”. You will not learn it overnight.
It is twice as hard to shift the transfer case if the vehicle is not at least slowly rolling forward. In addition, trying to shift the transfer case while the steering wheels are turned puts a bind on the synchronizers, making it almost impossible to shift in or out of gear.

IV. Removal from Vehicle

Recommended Equipment:

- Floor jack to support the transmission when the crossmember is removed.
- Transmission jack for raising and lowering the transfer case.
- Pneumatic impact gun.
- Magnetic parts tray.

Procedure:

1. Prior to removing the Atlas from a vehicle, place shifter(s) in neutral and drain the lubrication fluid.
2. Disconnect vehicle negative battery cable.
3. Remove front and rear drivelines from vehicle.
4. Disconnect shift linkage by removing e-clips that retain shift rod button ends.
5. Remove divorced Atlas mounting bracket from chassis.
6. Support the rear portion of the Atlas with a transmission jack or similar device.
7. Remove six mounting bolts that secure the transfer case to the transmission.
8. Disconnect the speedometer cable or wires.
9. Remove any wiring related to the 4WD/4L switches.
10. Remove the vent hose from the transfer case.
11. Separate the transfer case from the transmission by pulling straight back.
12. After separation, lower transfer case from vehicle.

V. Disassembly

Tools required:
Dead blow hammer
¾-inch socket
⅞-inch socket
¼-inch Allen socket
½-inch socket

Procedure:

1. Start with a clean work area.
2. Remove the brass elbow on the top of the transfer case or top of the shifter block.
3. Shift the unit into 4WD low range (both shift rods back into the case).
4. Set the unit upside-down on a work surface.
5. Remove shifter mechanisms/components and divorced bracket if equipped.
6. Remove all output yokes.
7. Remove oil pan and inspect internal components for signs of unusual wear.
8. Remove shift fork to shift rail retaining bolts.
9. Remove shift rail housing retaining bolts.
10. Remove the cluster pin bolts from both the front and rear of the transfer case.
11. From the front of the transfer case, push the cluster pin out of the case.
12. Support the cluster gear with one hand as you push out the cluster pin with the other.
13. Once the cluster pin is removed, remove the cluster gear from the case.
14. Be careful so that the caged needle bearings do not fall out of the cluster gear.
15. Remove the two thrust washers (300355) from the inside of the case.
16. To remove the shift fork assembly, use one hand to support the Atlas shift forks from inside the case.
17. Using a plastic dead blow hammer, gently tap the shift rails from the front of the case.
18. Remove six input housing bolts to free the input ring assembly from the transfer case.
19. Remove the five bolts from the front output shaft retainer.
20. Remove four rear bearing cap bolts for front output shaft.
21. Remove the front subassembly from the case.
22. Remove the five bolts retaining the rear output subassembly.
23. Remove input sub-assembly.

Front Output Sub-assembly:

Tools required:
Impact gun
¼ Allen wrench socket
½ inch socket
Snap ring pliers
Press

Procedure:

1. Remove front output housing (300103) from case.
2. Remove rear bearing retainer (300105) from case.
3. Remove front output gear from output shaft.
4. Remove caged needle bearings (300517) from shaft.
5. Remove brass Synchro blocker ring (300370) from shift hub assembly.
6. Remove two springs (300373) that retain the shift hub (300371) and three synchro dogs (300372) to the front output shaft hub (300123).
7. Remove tapered roller bearings (300511) from shaft with press.

Input Sub-assembly:

Tools required:
Impact gun
¼ Allen wrench socket
Snap ring pliers
1 1/8” socket
Arbor press

Procedure:

1. Remove six 1/4-inch Allen head bolts (723730) retaining input housing. Remove the input subassembly from case.
2. Remove the input gear snap ring (716453) from the input shaft.

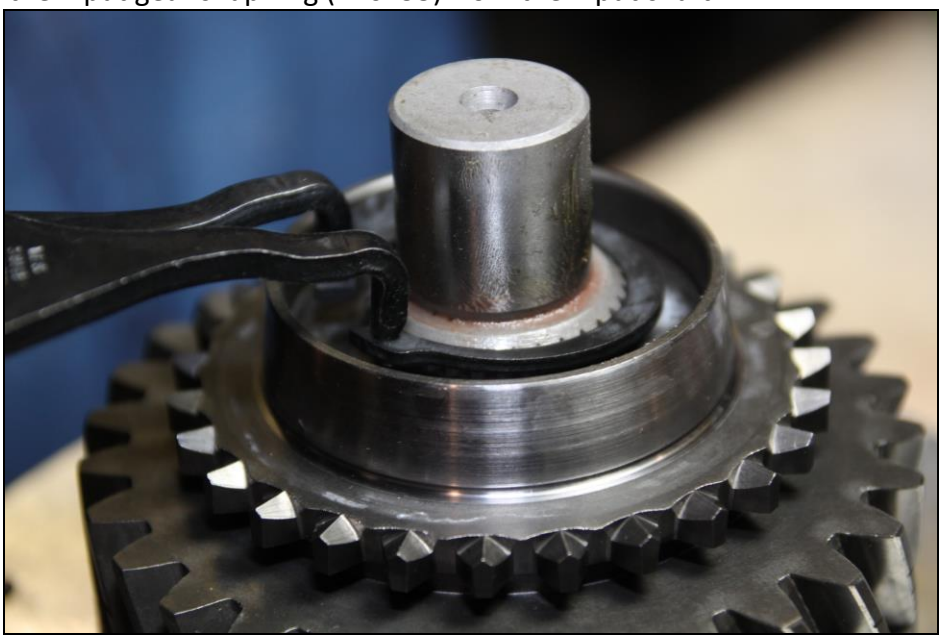

Figure 4

3. Remove input gear from shaft

Rear output sub-assembly:

Tools required:
Impact gun
¼ Allen wrench socket
Snap ring pliers

Procedure:

1. Remove speedometer housing (300628) from tail housing assembly.
2. Remove six 1/4-inch Allen head bolts (723730) retaining tail housing to case.
3. Remove tail housing from output shaft.
4. Remove rear output shim (300491) from output shaft.
5. Remove speedometer gear (300625) from output shaft.
6. Remove snap ring (300627) from output shaft.
7. Remove tapered roller bearing (300314) from output shaft. Critical: Do not to let tooling make contact with bearing surface on output shaft.
8. Remove brass Synchro blocker ring (300370) from shift hub assembly.
9. Remove two springs (300373) that retain the shift hub (300371) and three synchro dogs (300372) to the rear output shaft.
10. Remove tapered roller bearing (300314) from output shaft.

Shift rail housing sub-assembly:

Tools required:
¼ –inch Allen socket
¾-inch socket
⅞-inch socket

Procedure:

1. Remove 4WD and Low range shift switches (300378) from shift rail housing with 7/8-inch socket.
2. Remove three bolts retaining shift rail housing to Atlas case with ¼-inch Allen socket.
3. Remove shift detent plugs (302019) from shift rail housing with ¾-inch socket.
4. Remove corresponding detent balls and springs.
5. Shift the front shift rail into neutral shift position (middle slot).
6. Remove rear shift rail from shift rail housing by pulling straight out.
7. Remove front shift rail (300381) from shift rail housing by pulling straight out.

VI. Cleaning and Inspection

Advance Adapters recommends the following practices for powertrain assembly:

Part cleanliness:
Thoroughly clean all parts prior to assembly.

- Less debris/contamination in oil.
- More accurate part fitment.
- Maximizes oil seal life.
- Reduces bearing wear.

Figure 5-shows correctly cleaned housing on left and dirty housing on right

Part inspection:
Inspect used and new parts for signs of damage or wear prior to assembly.

- Allows for easier assembly.
- Guarantees a good repair.
- Damaged used parts may indicate other problems.

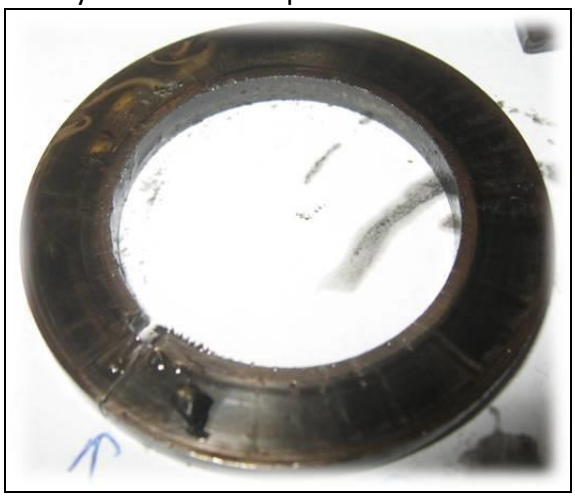

Figure 6-damaged component

Magnetic drain plug inspection:

- Inspect debris collected by magnet.
- Easy to check when performing oil change.
- A small amount of material is normal due to wear.
- Larger amounts of debris may indicate a problem.

Figure 7-normal amount of debris

Figure 8-excessive debris indicates problem

Bearing installation:

- Leave bearing in original packaging until just before installation (reduces risk of debris in bearing)
- Bearing into housing: press on outer race
- Bearing onto shaft: press on inner race

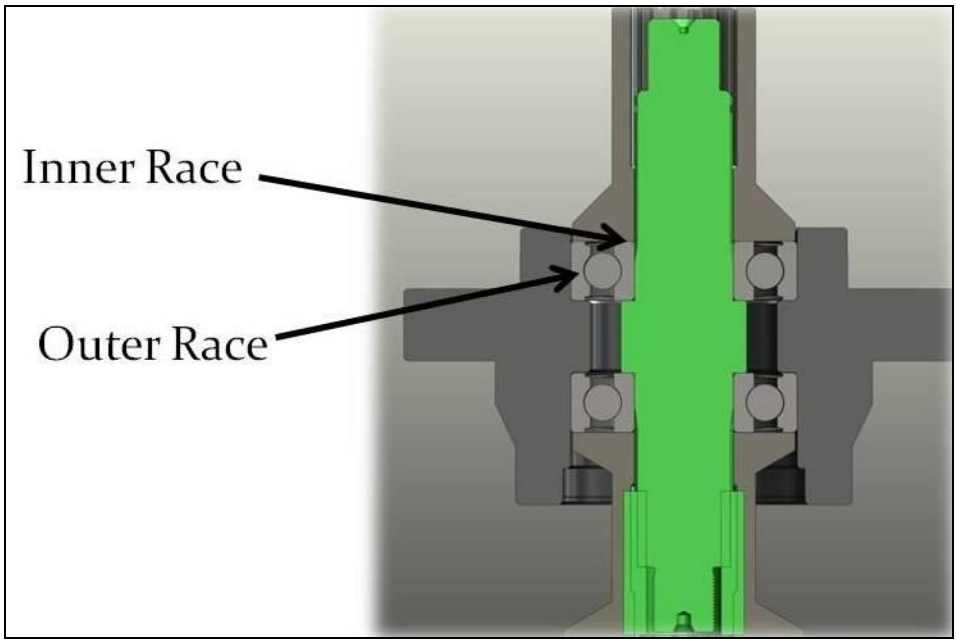

Figure 9

VII. Assembly

The Atlas II transfer case consists of six subassemblies. Each subassembly requires a specific set of procedures. In the following pages, you will find step by step instructions for each subassembly.

Six main sub-assemblies: (In order of assembly)

- Front output
- Rear output
- Input
- Shift rail housing
- Cluster gear
- Divorced mount

Front output sub-assembly:
The part number listed in the exploded view are an example of one assembly, your application may require different part numbers.

Tools required:
SST-104
SST-105
SST-100
Arbor press
Snap ring pliers

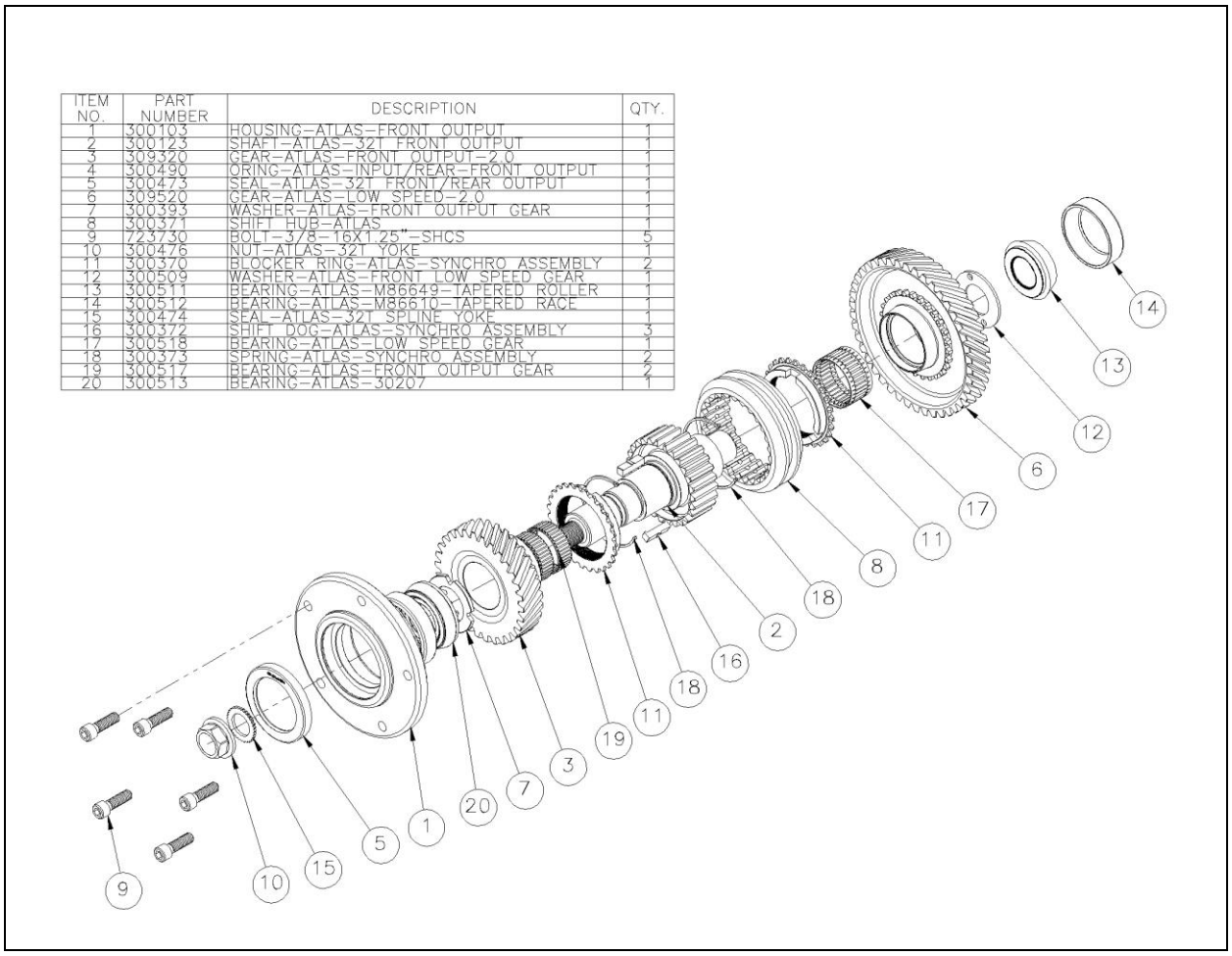

ITEM NO.	PART NUMBER	DESCRIPTION	QTY.
1	300103	HOUSING–ATLAS–FRONT OUTPUT	1
2	300123	SHAFT–ATLAS–32T FRONT OUTPUT	1
3	309320	GEAR–ATLAS–FRONT OUTPUT–2.0	1
4	300490	ORING–ATLAS–INPUT/REAR–FRONT OUTPUT	1
5	300473	SEAL–ATLAS–32T FRONT/REAR OUTPUT	1
6	309520	GEAR–ATLAS–LOW SPEED–2.0	1
7	300393	WASHER–ATLAS–FRONT OUTPUT GEAR	1
8	300371	SHIFT HUB–ATLAS	1
9	723730	BOLT–3/8–16X1.25"–SHCS	5
10	300476	NUT–ATLAS–32T YOKE	1
11	300370	BLOCKER RING–ATLAS–SYNCHRO ASSEMBLY	2
12	300509	WASHER–ATLAS–FRONT LOW SPEED GEAR	1
13	300511	BEARING–ATLAS–M86649–TAPERED ROLLER	1
14	300512	BEARING–ATLAS–M86610–TAPERED RACE	1
15	300474	SEAL–ATLAS–32T SPLINE YOKE	1
16	300372	SHIFT DOG–ATLAS–SYNCHRO ASSEMBLY	3
17	300518	BEARING–ATLAS–LOW SPEED GEAR	1
18	300373	SPRING–ATLAS–SYNCHRO ASSEMBLY	2
19	300517	BEARING–ATLAS–FRONT OUTPUT GEAR	2
20	300513	BEARING–ATLAS–30207	1

Figure 10-front output exploded view

Procedure:

1. Start by installing bearing race (300513) into retainer casting (300103). Press bearing race into housing with special service tool SST-104. Ensure bearing race is fully seated into housing

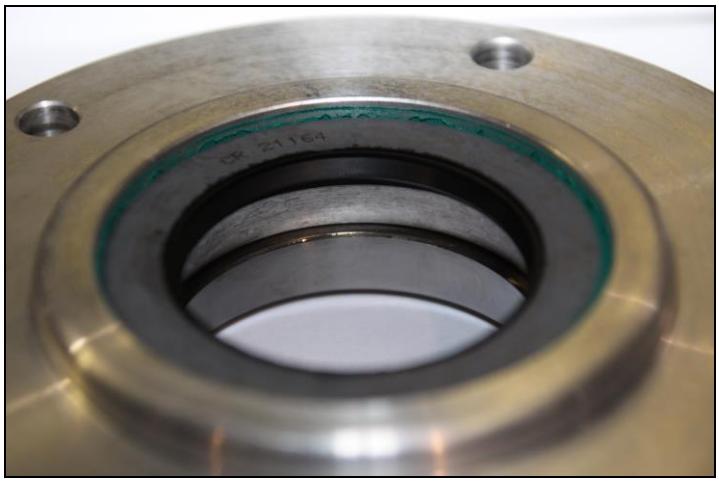

Figure 11

2. Press front output yoke seal into housing with SST-104.
3. Position front output shaft (300123) as shown and install synchro slider (300371) on to shaft.

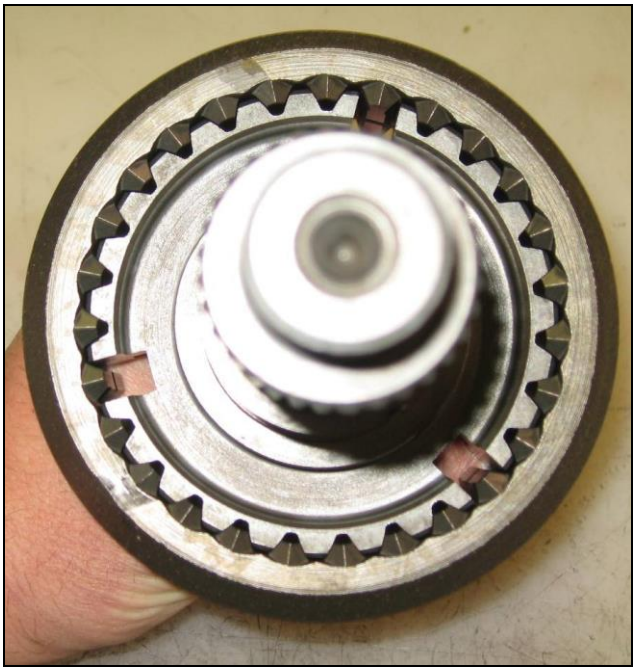

Figure 12

4. Position shaft as shown and install synchro slider over the synchro hub.
5. Use thumb and fore finger to cover up the three synchro dog holes on the shorter side of the shaft.
6. Install three synchro dogs (300372). Note: Spring retaining flanges should face shaft.

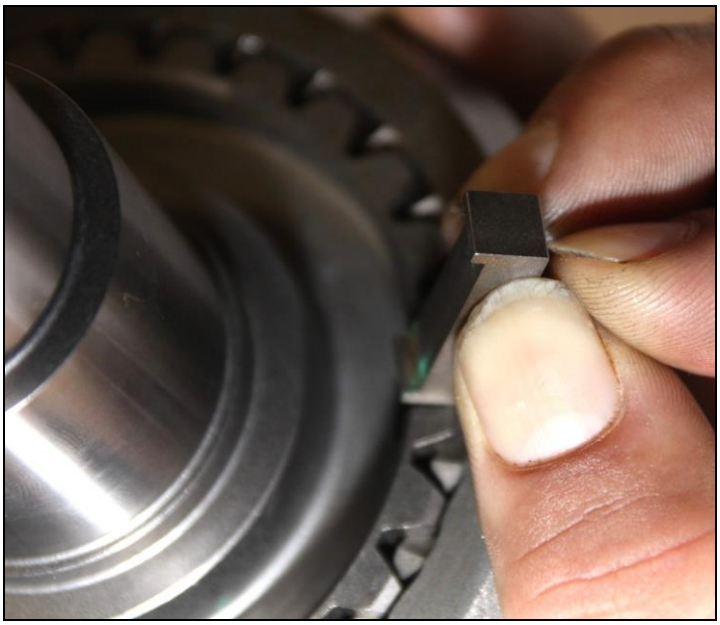

Figure 13

7. Install synchro dog synchro spring (300373) on long side of shaft. This retains the three synchro dogs to the synchro hub.

Figure 14

8. Install second synchro spring into groove on short side of shaft (inside void of synchro hub).
9. Install two needle bearings (300517) on long side of shaft.

Figure 15

10. Install brass blocker synchro ring (300370) on shaft. Ensure three notches line up with the synchro dogs in the hub.

Figure 16

11. Apply assembly lube to needle bearings and synchro ring.

12. Install front output high range gear as shown.

Figure 17

13. Install thrust washer (300393) on shaft. Ensure that chamfered edge is pointed towards gear.
14. Install tapered roller bearing (300513) with minor end facing up.

Figure 18

Rear output sub-assembly:

The part number listed in the exploded view are an example of one assembly, your application may require different part numbers.

Tools required:
Assembly oil (spray type)
SST-104
SST-105
SST-106
Press
Snap ring pliers
Dead blow hammer
Dial indicator
Micrometer
Pry bar
¼ Allen wrench socket

ITEM NO.	PART NUMBER	DESCRIPTION	QTY.
1	300104	HOUSING–ATLAS–STANDARD REAR OUTPUT	1
2	300140	SHAFT–ATLAS–HD REAR OUTPUT	1
3	300491	SHIM–ATLAS–REAR OUTPUT SHAFT	1
4	300513	BEARING–ATLAS–30207	1
5	300314	BEARING–ATLAS–26885–TAPERED ROLLER	1
6	300514	BEARING–ATLAS–26885–TAPERED RACE	1
7	300518	BEARING–ATLAS–LOW SPEED GEAR	1
8	300473	SEAL–ATLAS–32T FRONT/REAR OUTPUT	1
9	300515	BEARING–ATLAS–INTERNAL REAR OUTPUT	1
10	300490	ORING–ATLAS–INPUT/REAR–FRONT OUTPUT	1
11	309520	GEAR–ATLAS–LOW SPEED–2.0	1
12	300370	BLOCKER RING–ATLAS–SYNCHRO ASSEMBLY	3
13	300476	NUT–ATLAS–32T YOKE	1
14	723730	BOLT–3/8–16X1.25"–SHCS	5
15	300628	HOUSING–SPEEDOMETER	1
16	300630	ORING–SPEEDOMETER HOUSING	1
17	300631	SEAL–SPEEDOMETER SHAFT	1
18	300620–34	GEAR–SPEEDOMETER–34T	1
19	300372	SHIFT DOG–ATLAS–SYNCHRO ASSEMBLY	3
20	300371	SHIFT HUB–ATLAS	1
21	300373	SPRING–ATLAS–SYNCHRO ASSEMBLY	2
22	300627	RETAINING RING–ATLAS–13T SPEEDOMETER GEAR	1
23	300625	GEAR–SPEEDOMETER–13T WORM	1
24	300474	SEAL–ATLAS–32T SPLINE YOKE	1
25	300629	CLIP–SPEEDOMETER RETAINING	1
26	723123	BOLT–5/16–18X1/2"–HHCS–GR5	1

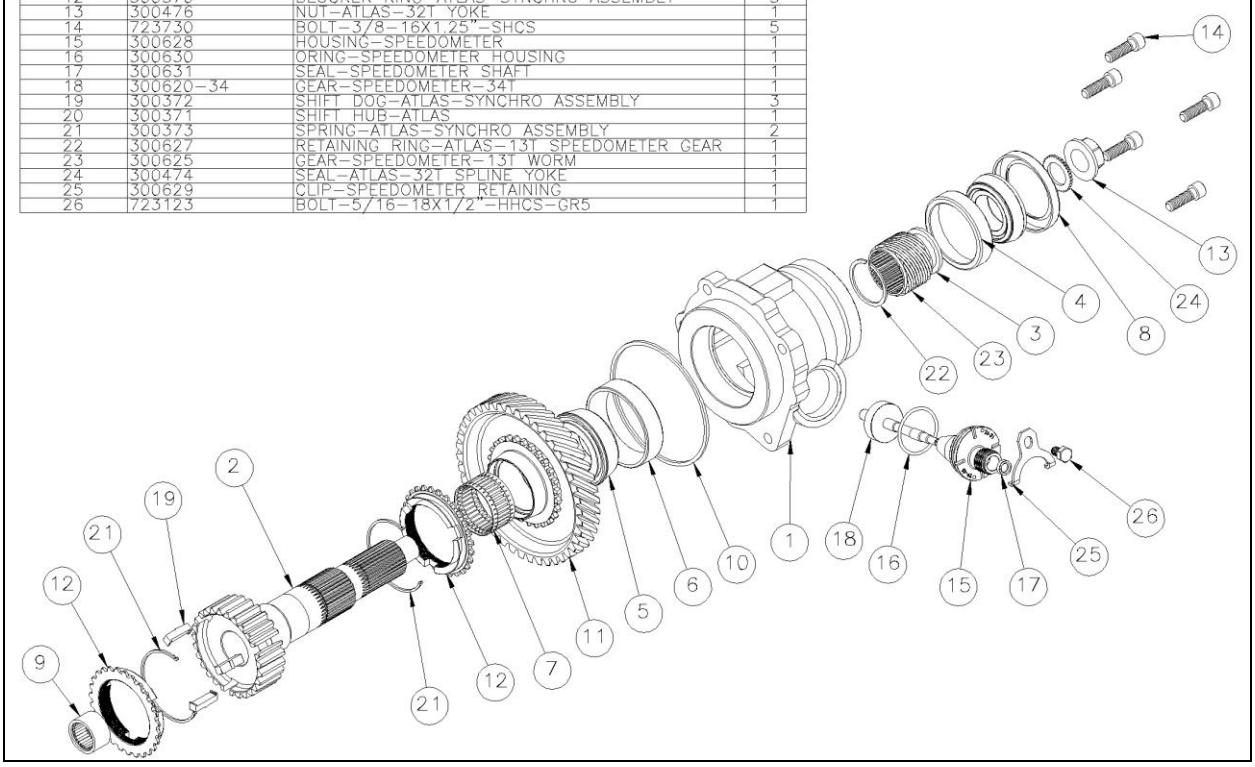

Figure 19-exploded view rear output

Procedure:

1. Start by pressing bearing race (300513) into the tail housing (300104). Ensure that bearing race is fully seated into housing.

Figure 20

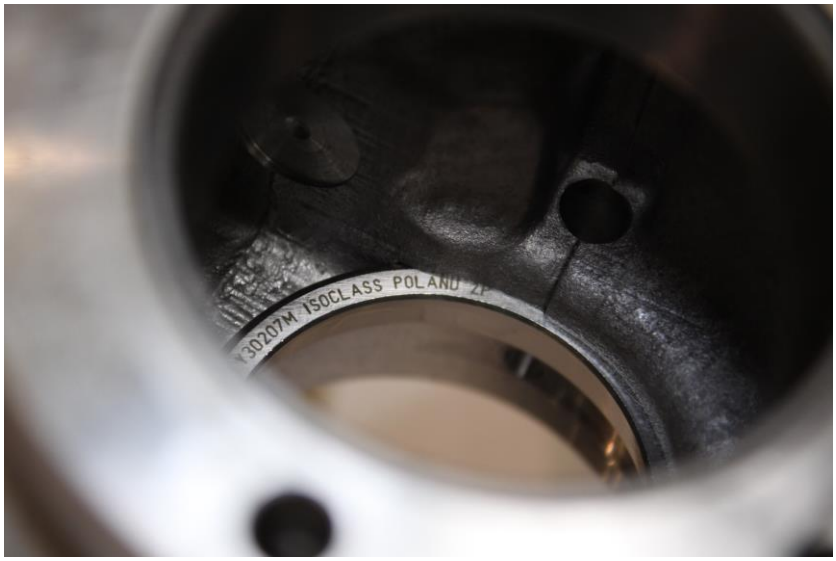

Figure 21-bearing race fully seated

2. Install caged needle bearing (300515) into the rear pocket of the output shaft. Critical: Ensure that the tapered side of bearing faces inside pocket. Use special service tool SST-106

Figure 22

3. Slide tapered roller (300313) onto output shaft.

Checking and setting output shaft endplay:

The rear output sub-assembly utilizes two tapered roller bearings to support the rear output shaft. This setup requires shimming to achieve the desired bearing preload during operation. While the initial endplay is set at the factory, any Atlas rebuild may require an adjustment due to normal bearing wear.

Figure 16

Figure 17

A. Temporarily assemble rear output assembly(housing, shaft, bearings, shim, yoke, and nut)
B. Fasten output assembly to empty Atlas main housing using existing fasteners as seen in Fig. 16
C. Gently drive the output shaft assembly with a soft hammer to seat rear output bearing as seen in Fig. 16
D. Clamp dial indicator base to exterior of Atlas as shown in Fig. 17
E. Use pry bar to apply vertical force to bottom side of flange yoke.
F. Record indicator value and compare to factory specification seen below.
G. Endplay specification: 0.001-0.0025”[0.025-0.064mm] At 65-80°F [18-27°C]
H. **To decrease endplay:** use a smaller shim than the one used for measurement
I. **To increase endplay:** use a larger shim than the one used for measurement
J. Using a micrometer, choose an appropriate shim that will adjust endplay into the range given above.
K. Disassemble rear output assembly to change to newly selected shim
L. Install new shim onto output shaft and reassemble output shaft assembly
M. Recheck output shaft end play. Repeat steps A through L if necessary to achieve correct endplay

Rear output continued:

4. Install tail housing (300104) and bearing (300513) onto output shaft.
5. Install output yoke and retaining nut. Torque to 150 lb-ft.
6. Install tail housing seal (300473) with special service tool SST-104
7. With output shaft seal installed, remove tail housing from output shaft.
8. Install o-ring (300490) around tail housing mounting flange base.
9. Temporarily remove end play shim.
10. Remove bearing (300104) from output shaft. Critical: do not let tool touch ground needle bearing surface on shaft.
11. With the bearing removed, install shift synchro hub over the hub section of the output shaft.
12. Install three synchro dogs (300372) with the legs facing the output shaft.

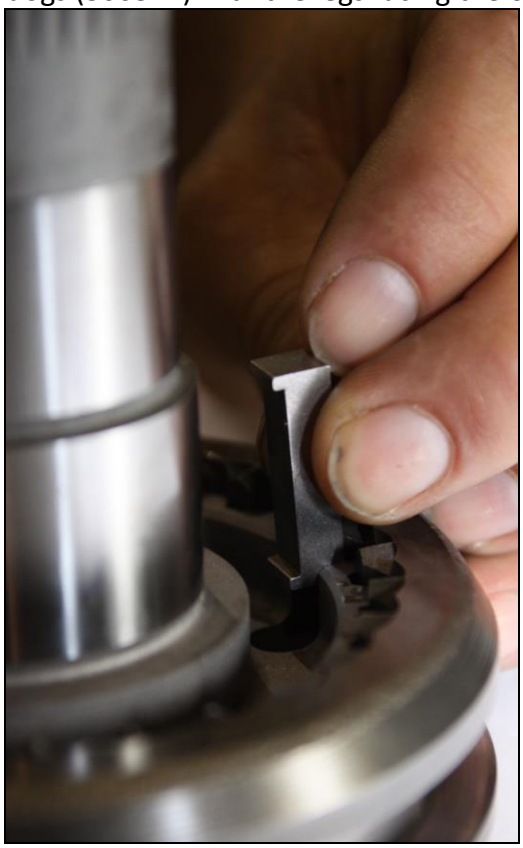

Figure 23

13. Install two retaining springs (300373) to either side of the hub assembly. This retains the three synchro dogs to the synchro hub.

Input sub-assembly: (divorced housing shown)

The part number listed in the exploded view are an example of one assembly, your application may require different part numbers.

Tools required:

Assembly oil (spray type)
SST-100
SST-101
Press
Snap ring pliers

ITEM NO.	PART NUMBER	DESCRIPTION	QTY.
1	300510	BEARING–ATLAS–INPUT–6307	2
2	716453	RETAINING RING–ATLAS–INPUT GEAR	1
3	309120	GEAR–ATLAS–INPUT–2.0	1
4	300016A	SHAFT–ATLAS–DIVORCED INPUT	1
5	300490	ORING–ATLAS–INPUT/REAR–FRONT OUTPUT	1
6	723730	BOLT–3/8–16X1.25"–SHCS	6
7	302085	WASHER–3/8" SHCS	6
8	300106	HOUSING–ATLAS–DIVORCED INPUT	1
9	300476	NUT–ATLAS–32T YOKE	1
10	300503	SEAL–ATLAS–DIVORCED INPUT	1
11	300474	SEAL–ATLAS–32T SPLINE YOKE	1
12	300493	SHIM–ATLAS–INPUT GEAR(.006,.010)	1

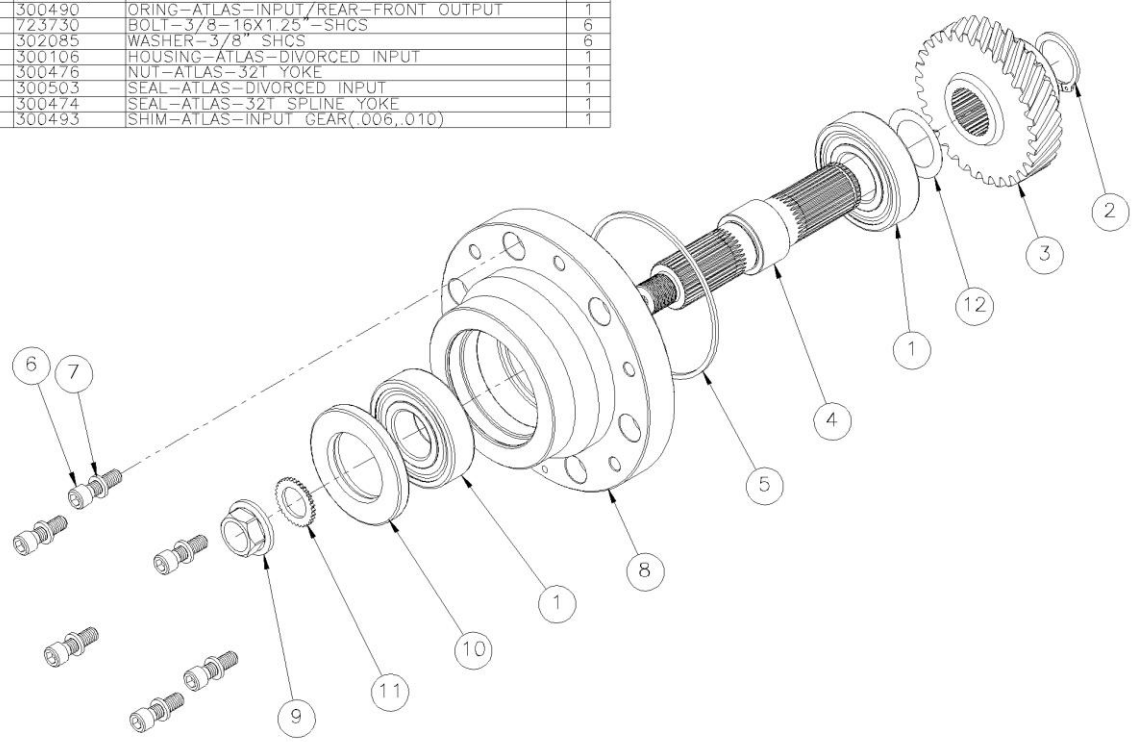

Figure 24-exploded view divorced input assembly

Procedure:

1. Start by installing the first of two input shaft main bearings (300510) on the input shaft as shown in Fig. 18.

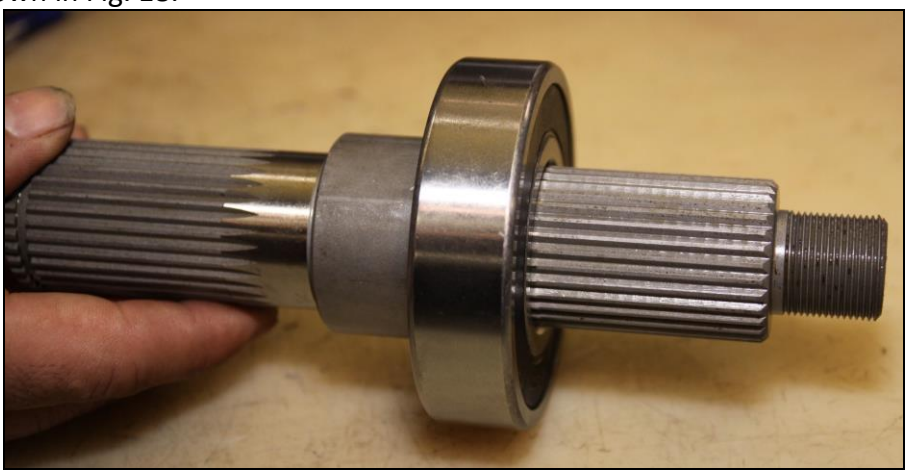

Figure 25

2. Once the main bearing is in place on the input shaft, place the shaft into the fixture with the flange side of the fixture facing the bearing.
3. Use the fixture to hold the input shaft vertically on work surface.
4. Install front input housing (300106 divorced, 300102 std.).
5. Install second input shaft bearing (300510) on input shaft.
6. Press both bearings into input housing with press. Use special service tool SST-101 on
7. top and SST-100 on the bottom.

Figure 26

8. Press seal (300503) into input housing using SST-101.

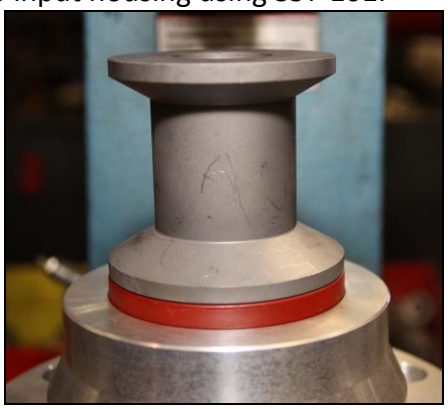

Figure 27

9. With both bearings and seal in place, install input gear onto splined section of input shaft.
10. Use snap ring (716453) to retain input gear to input shaft.

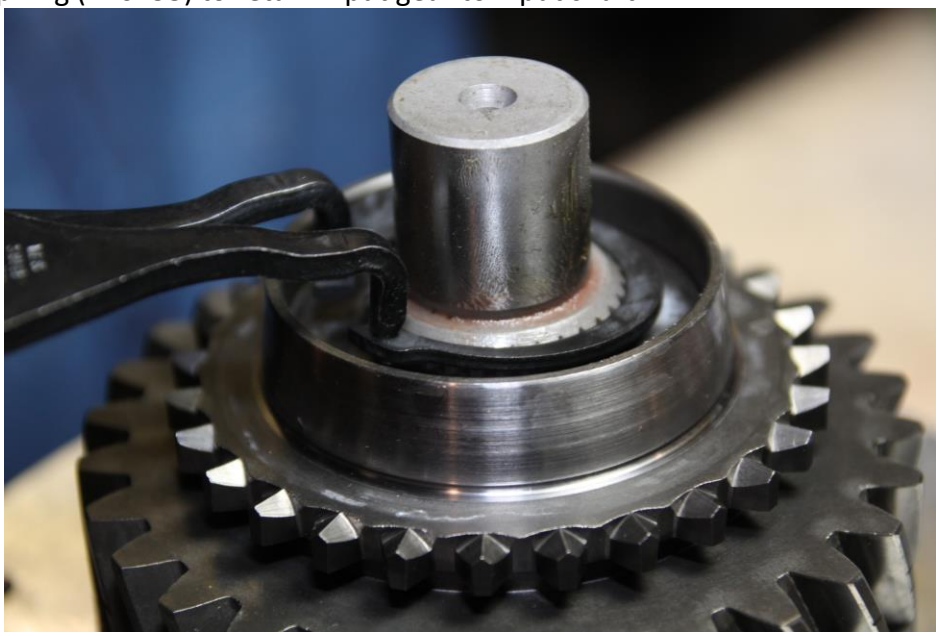

Figure 28

Shift rail housing sub-assembly:

The part number listed in the exploded view are an example of one assembly, your application may require different part numbers.

Tools required:

Assembly oil (spray type)
SST-112
Arbor press
Flat head screwdriver or similar
Torque wrench
¾-inch socket
⅞-inch socket

ITEM NO.	PART NUMBER	DESCRIPTION	QTY.
1	300384	HOUSING–ATLAS–SHIFT RAIL ASSEMBLY	1
2	300382	SHAFT–ATLAS–FRONT SHIFT RAIL	1
3	300381	SHAFT–ATLAS– REAR SHIFT RAIL	1
4	300388	ROD–ATLAS–SHIFT DETENT LOCKOUT	2
5	302019	PLUG–ATLAS–SHIFT DETENT	2
6	300390	SPRING–ATLAS–SHIFT DETENT	2
7	300392	BALL–ATLAS–SHIFT DETENT–3/8"	2
8	300482	ORING–ATLAS–SHIFT DETENT	2
9	723730	BOLT–3/8–16X1.25"–SHCS	2
10	723729	BOLT–3/8–16X2"–SHCS	1
11	301378A	SHIFT FORK–ATLAS–LH CASE REAR/RH CASE FRONT	1
12	301378B	SHIFT FORK–ATLAS–LH CASE FRONT/RH CASE REAR	1
13	300378	SWITCH–ATLAS–4WD/LOW RANGE	2
14	300383	CLIP–ATLAS–SHIFT FORK	4
15	300386	BOLT–3/8–24X1/2"–CPSS	2
16	300389	PLUG–ATLAS–SHIFT RAIL HOUSING	2

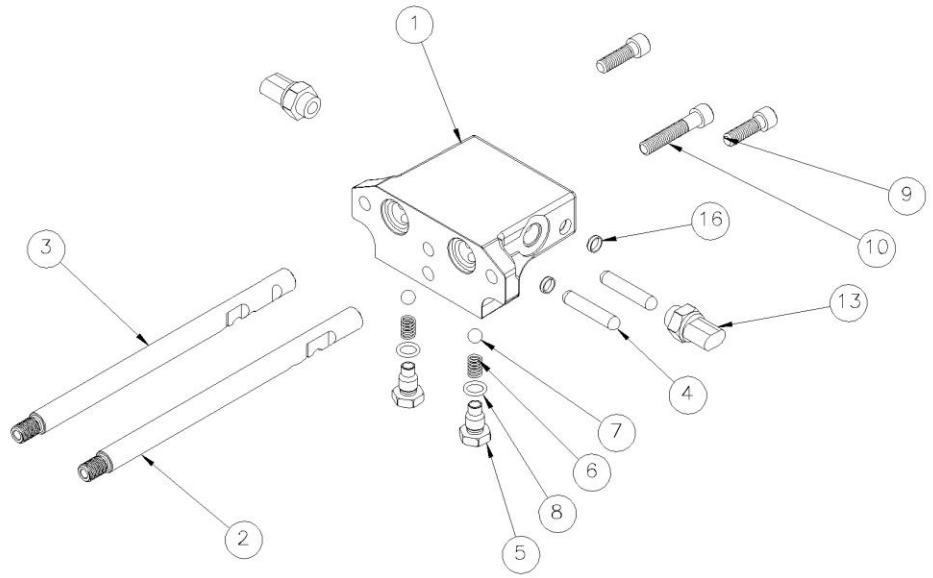

Figure 29-exploded view shift rail housing

Procedure:

1. Apply spray lubrication to the inner bore of the shift rod detent holes as shown.

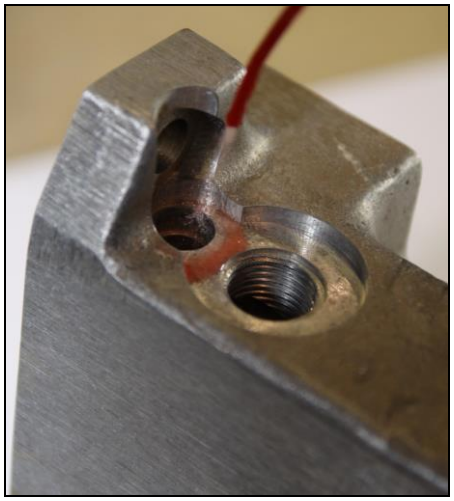

Figure 30

2. Install lockout pills (300388) into previously lubricated holes.
3. Install front shift rail (300382) into shift rail housing as shown. Critical: Ensure that the three detent slots on the shift rail face the holes where detent balls and springs are installed.

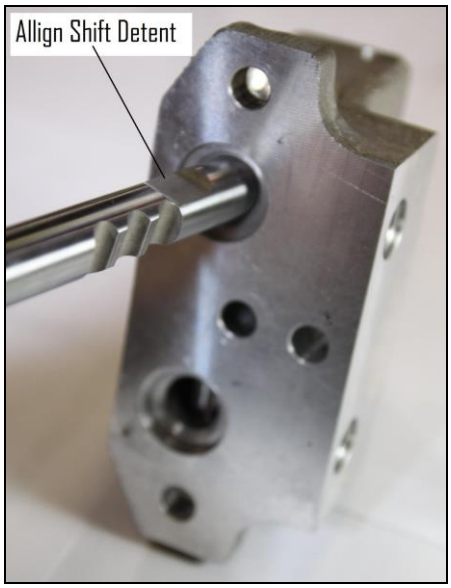

Figure 31

4. Position the front shift rail in the neutral shift position (middle slot). This will allow installation of rear shift rail.
5. Install rear shift rail (300381) into shift rail housing. Critical: Ensure that the three detent slots on the shift rail face the holes where detent balls and springs are installed.
6. Position the shift rail housing so that the shift detent holes face up.
7. Install shift detent ball (300392) into each detent hole of shift housing.

8. Install shift detent spring (300390) into each detent hole of shift housing. Ensure that each spring touches each detent ball.
9. Apply assembly lubrication into shift detent holes of shift housing.
10. Apply assembly lubrication on each shift detent o-ring (300482).
11. Install shift detent o-rings (300482) on each shift detent plug (302019).
12. Install each shift detent plug (302019) with ¾-inch socket. Torque to 12 lb-ft.
13. Install shift housing freeze plugs (300389) in shift housing as shown. Use SST-112 and hammer to set plugs in place. Note: New freeze plugs are only needed when installing new replacement shift housing.
14. Install 4WD shift switch (300378 or plug) into hole on front shift rail side of shift housing. Tighten to 12 lb-ft. with ⅞-inch socket.
15. Install Low range shift switch (300378 or plug) into hole on rear shift rail side of shift housing. Tighten to 12 lb-ft. with ⅞-inch socket.

Final Assembly

Tools required:
Assembly oil (spray type)
SST-100
SST-110
SST-111
Arbor press
Torque wrench
¾-inch socket
1-1/8”-inch socket
¼-inch Allen socket
Depth micrometer
Micrometer
LocTite 518
LocTite thread locking compound (medium strength)
RTV silicone
Synthetic grease
Solvent
Clean rags

Procedure:

1. Install front output tapered race (300512) into hole on rear side of Atlas main case. Use SST-100 and arbor press. Tapered side should face front. Race should be flush with exterior surface of case.
2. Apply assembly lubricant to low range gear (309520) as shown.

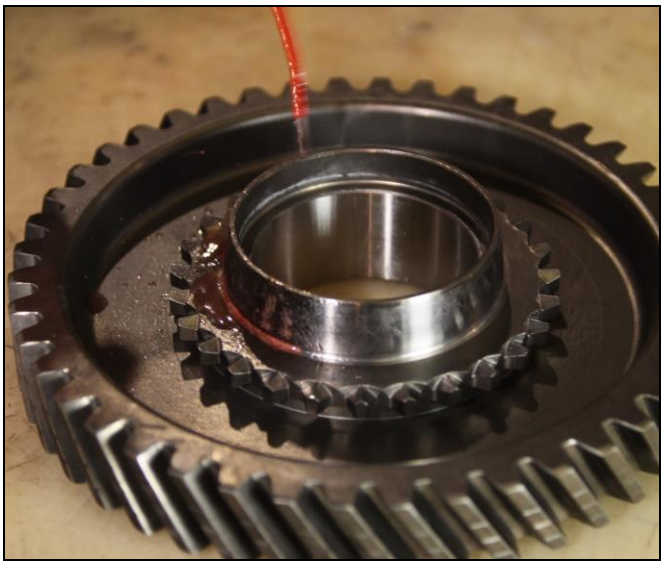

Figure 32

3. Install brass synchronizer blocker ring (30370) on low range gear (309520) as shown.

Figure 33

4. Install Low range bearing (300518) on front output subassembly shaft (300123) as shown. Coat bearing with assembly lubrication.

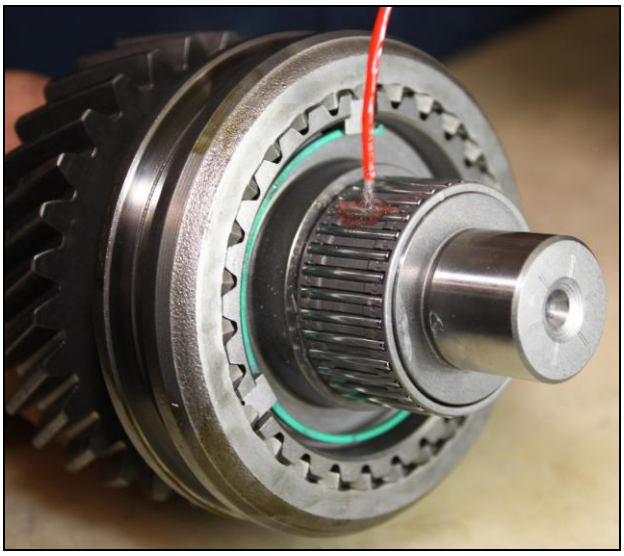

Figure 34

5. Place Low range gear and synchronizer blocker ring inside Atlas main housing. Brass synchronizer side should face front of case.
6. Install front subassembly through front output opening of Atlas main housing case. Hold low range gear up with opposite hand as shown.

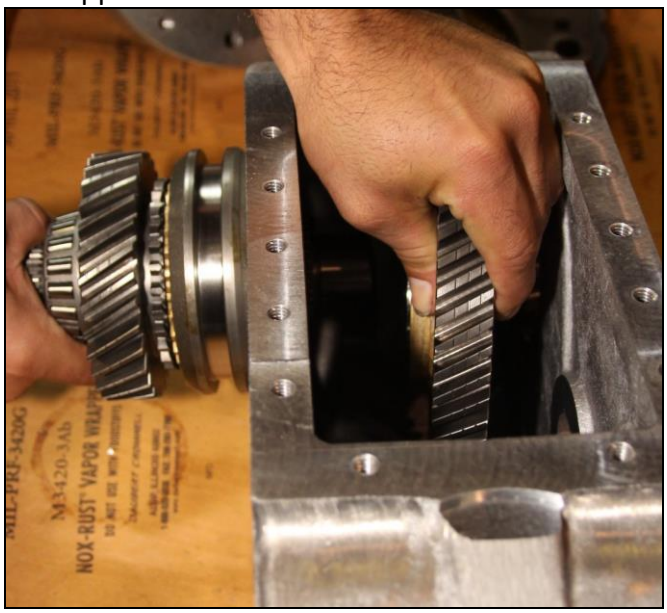

Figure 35

7. Carefully align brass blocker synchro ring (300370) with the three synchro dogs (300372) in the front output shaft hub.
8. Install front output washer (300509) onto front output shaft with chamfered edge facing towards gear.

9. Install tapered roller (300511) on front output shaft as shown. Coat bearing with assembly lubrication.

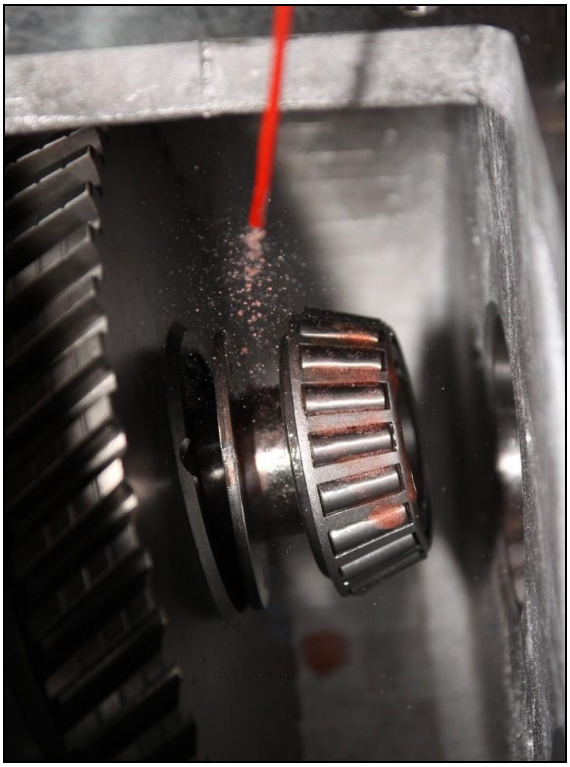

Figure 36

10. Align rear side of front output shaft with finger while pushing front subassembly in place with other hand.
11. Reposition case on workbench as shown.

Figure 37

12. Install o-ring (300490) on front output housing as shown.

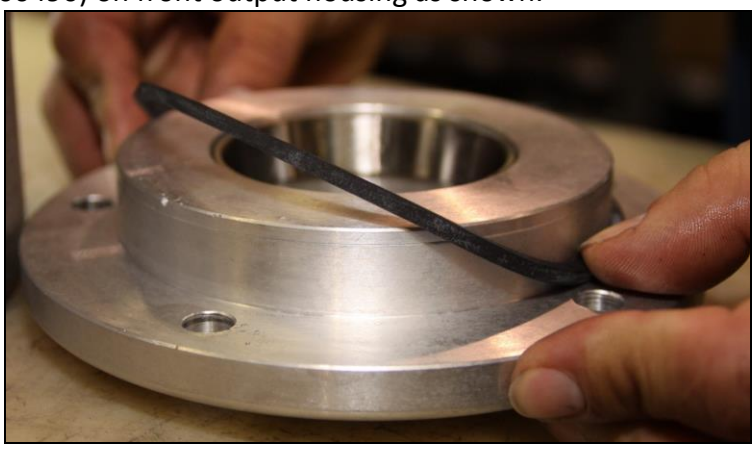

Figure 38

13. Install front output housing ensuring that holes line up with threaded holes in Atlas main housing.

Figure 39

14. Coat each of the five retaining bolts with RTV silicone prior to installation. Torque bolts to 35 foot-pounds with ¼-inch Allen socket (new bolts 2014 have a seal patch sealant on them and do not use silicon).

Figure 40

15. Apply assembly lubrication to front output yoke seal.

16. Apply RTV silicone to inner splines of front output yoke.
17. We no longer use the yoke seal washer on any yokes, the silicon on step 16 will seal the yoke to the shaft. **Do not use P/N seal washer (300474) inside of yoke**.
18. Install front output yoke. Torque retaining nut to 150 Lb-ft with 1-1/8” inch socket.
19. Reposition case on workbench to access rear side of front output. Clean case with solvent and rag in the area where the front output bearing retainer (300105) mates to case.

Front output preload adjustment:

a. Measure rear bearing retainer depth (D) using depth micrometer:
   0.130” [3.302mm] is the nominal depth

Figure 41

b. Measure bearing race height (H) from main housing using depth micrometer

Figure 42-measurement of bearing race height

c. Factory preload specification: 0.000-0.0015”[0.000-0.038mm] At 65-80°F [18-27°C]

d. Example preload calculation:

Bearing retainer depth (D): 0.130” [3.302mm]
Bearing race height (H): 0.113” [2.870mm]
Desired preload (P): 0.001” [0.025mm]

Equation: **D – H + P** = required thickness of shims

Calculation: 0.130” - 0.113” + 0.001” = .018” [.457mm] (Required thickness of shims)

e. Choose from available shims to construct calculated thickness

Available shims: 0.010” [0.254mm], 0.008” [0.203mm], 0.0045” [0.114mm]

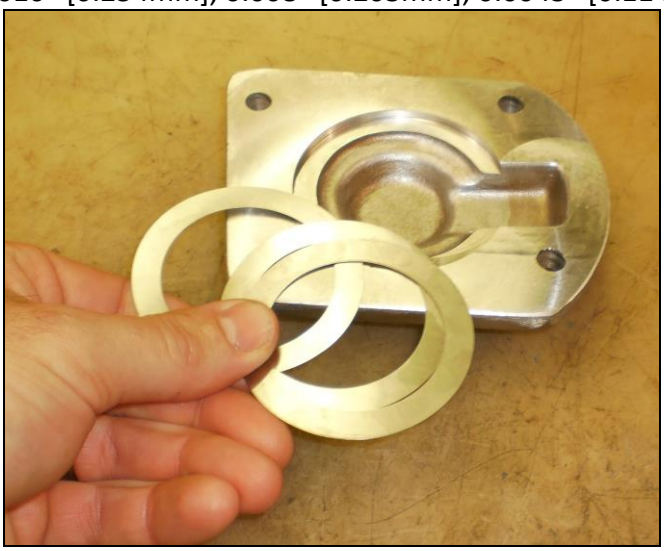

Figure 43

f. Place shims in bearing housing and measure depth with depth micrometer verify correct thickness of shims

Figure 44-depth measured with shims installed

20. Apply continuous bead of silicon to mating surface of front output bearing retainer as shown.

Figure 45

21. Install LocTite 518 on four retaining bolts (new bolts 2014 do not require). Install bolts by hand with 5/16-inch socket. Torque to 25 lb-ft. Do not tighten with impact gun.
22. Apply assembly lubricant to Low range gear (309520) as shown in Fig. 23.
23. Install brass blocker synchro ring (300370) on low range gear (309520).
24. Place low range gear and blocker synchro ring inside Atlas main housing (input side). Brass synchronizer side should face front of case.

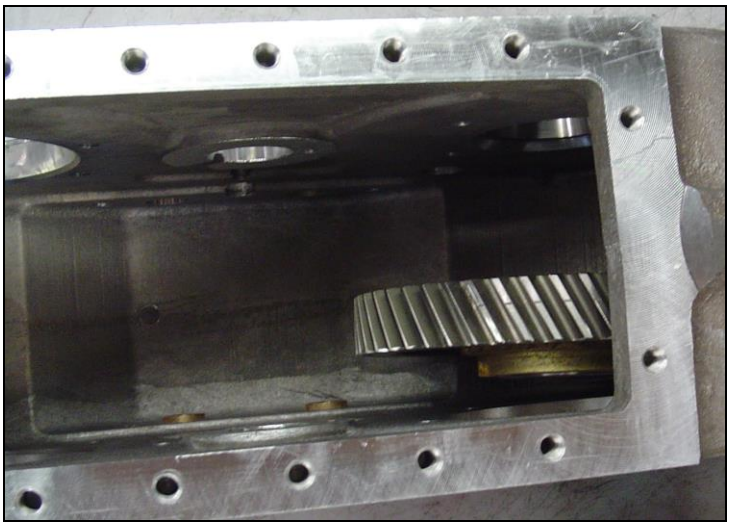

Figure 46-low range gear installed in preparation for rear output sub-assembly

25. Align low range gear (309520) with one hand while installing rear output sub-assembly in place with other hand. Critical: Align brass blocker synchro ring (300370) with the three synchro dogs (300372) in the input shaft hub.
26. Position case on workbench with front side facing up.
27. Insert rear output shaft through input bore and then into previously installed low range gear.

28. Install large tapered roller (300511) onto output shaft.

Figure 47-tapered roller installed on shaft while in main case

29. Reposition case upside down on workbench. Hold output shaft tight against rear portion of case while rotating case into position.
30. Use snap ring pliers to install snap ring (300627) on output shaft as shown.
31. Install speedometer gear (300625) on output shaft.

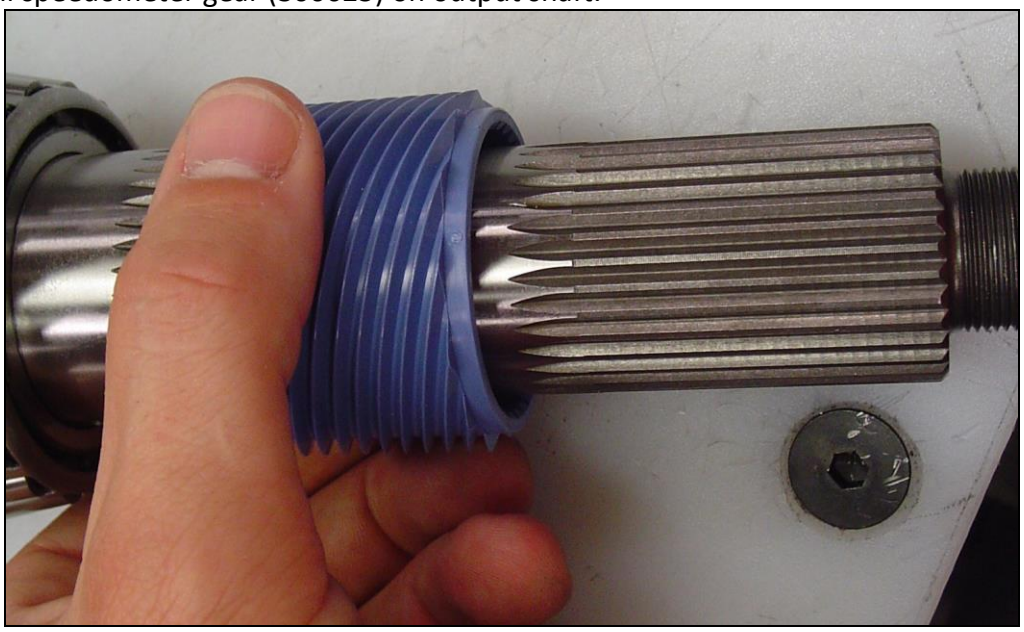

Figure 48-speedometer gear installation with shaft in main housing

32. Install rear output shim (300491) on output shaft.

Figure 49

33. Install rear output housing onto rear output shaft aligning the five mounting bolt holes with the tapped holes in the Atlas main housing.
34. Coat each of five 5/16-inch Allen bolts (301401) with RTV Silicone as shown (new bolts 2014 do not require).
35. Tighten the five rear output housing bolts by hand with 5/16-inch Allen socket. Torque to 35 lb-ft
36. Apply assembly lubrication to rear output bearing (300511) and pocket bearing (300515).
37. Apply assembly lubrication to synchronizer cone on input shaft subassembly.
38. Install brass synchro blocker on rear output gear hub.
39. Align the three notches of the brass synchronizer blocker ring with the synchronizer dogs in the rear output sub-assembly.
40. Install input sub-assembly. Correct housing alignment is seen when the indicating mark is oriented towards the bottom of the main housing.

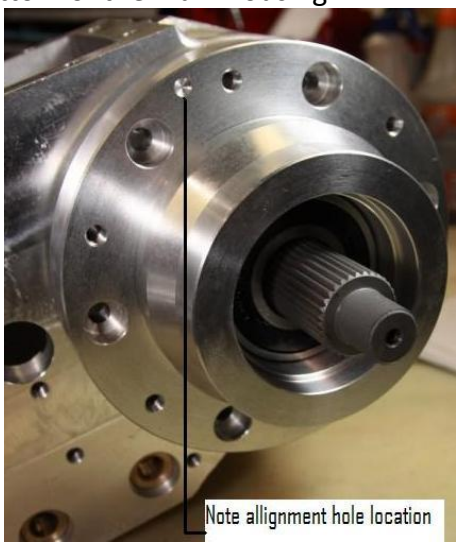

Figure 50

41. Support the splined section of the rear output shaft as you mate the input sub-assembly with the rear output sub-assembly. Be sure that the synchronizer dogs line up properly as the two sub-assemblies are joined.
42. Align the six mounting holes of the input housing with threaded holes in the case.
43. Apply medium strength LocTite to the six 5/16-inch Allen bolts (301401).
44. Install the six mounting bolts and washers by hand to ensure proper thread engagement. Torque to 40 lb-ft.
45. Use solvent to clean mating surfaces of shift housing sub-assembly and main case where sub-assembly is to be installed.
46. Apply silicon to mounting face of shift rail housing subassembly.

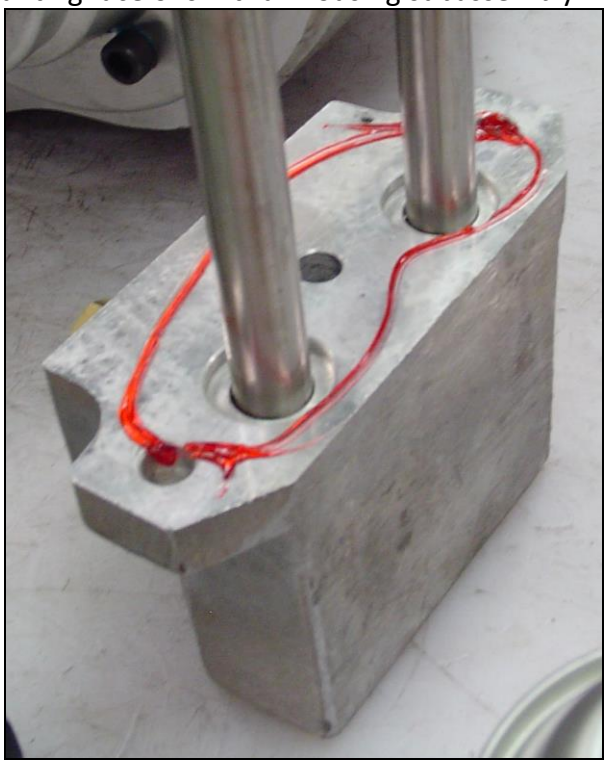

Figure 51

47. Position transfer case on workbench with tail housing facing you.
48. Install shift forks (301378A & 301378B) on appropriate shift hub. Critical: Install the shift forks with minor side of tubular fork interface towards the rear of case (longer curved surface of fork should point down towards work surface).

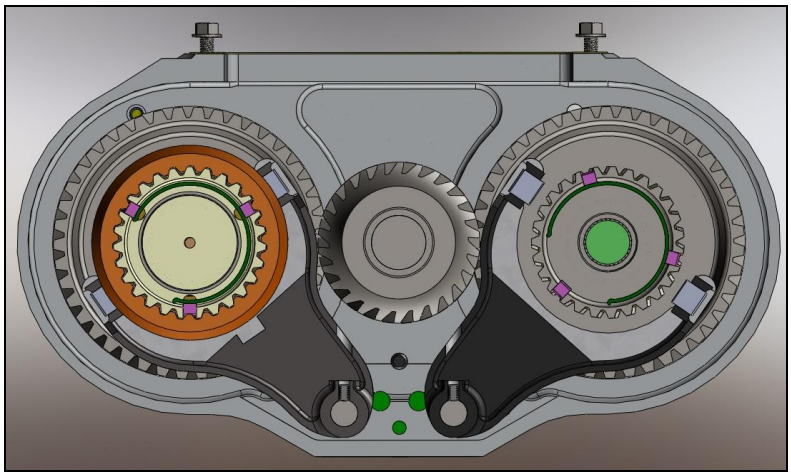

Figure 52

49. Insert shift rail housing sub-assembly into main housing. Align shift fork holes with corresponding shift rail. Wiggle the shift sub-assembly as you attempt installation.
50. Install three shift rail housing support bolts by hand. Torque to 30 lb-ft with ¼-inch Allen socket.
51. Position transfer case upside down on workbench so that the input shaft faces you.
52. Attach shift rail rod ends (303055) to threaded ends of shift rails.
53. Place both shift rails in the Neutral position.
54. Align each shift fork so that the retaining screws (300385) can be installed in each shift rail.
55. Apply medium strength LocTite to the two 3/8-inch mounting screws (300385).
56. Secure each shift fork to corresponding shift rail by hand with appropriate tool. Torque to 150 lb-in.
57. Test each shift fork to ensure bind-free operation. After testing, place both shifters in low range.
58. Apply assembly lubrication to rear output yoke seal. Apply RTV silicone to inner splines of rear output yoke.
59. We no longer use the yoke seal washer on any yokes, the silicon on step 16 will seal the yoke to the shaft. **Do not use P/N seal washer (300474) inside of yoke**.
60. Install rear output yoke. Torque retaining nut to 150 lb-ft with 1 1/8 inch socket.
61. Apply assembly lube to one side of each cluster gear thrust washer (300355). This will help retain the washers in place while installing the cluster gear assembly.

Figure 53

62. Install rear cluster gear thrust washer inside case as shown.

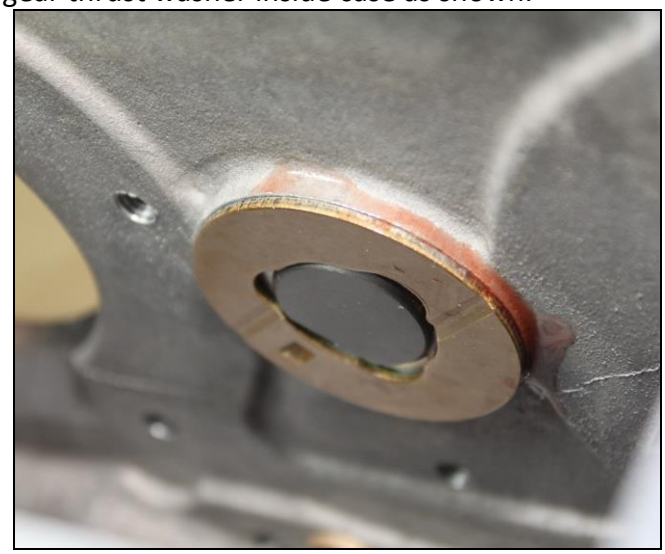

Figure 54

63. Install cluster gear shaft (300022) from back side of transfer case, aligning flat relief area parallel with bottom of transfer case.
64. Push cluster gear shaft through rear case opening until flush with inner surface of rear cluster shaft washer (300355).
65. Install front cluster shaft washer to front inside of case. Use special service tool SST-110 to retain washer.
66. Install cluster gear needle bearings and spacer as shown in Fig. 47.

Figure 55

67. Position transfer case on work bench as shown.

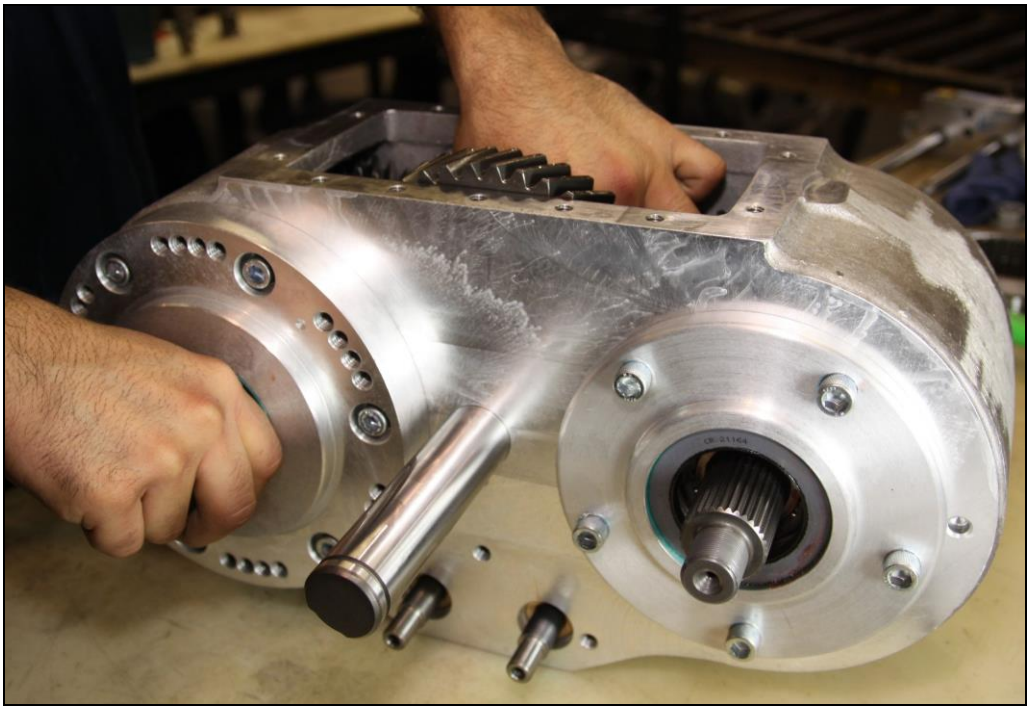

Figure 56

68. Hold cluster gear as shown.

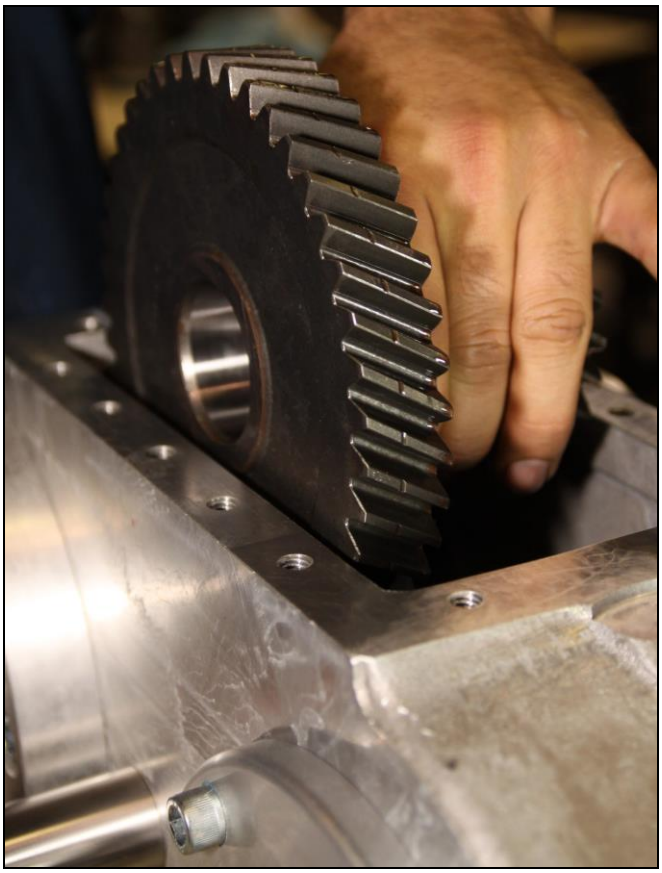

Figure 57

69. Gently lower the cluster gear into the main housing.
70. Rotate front/rear output yokes back and forth until the cluster gear assembly drops into alignment with SST-110.
71. Use SST-110 to retain cluster gear assembly in place.
72. Install first o-ring (300358) on back side of cluster shaft.

Figure 58

73. Push cluster shaft through cluster gear until the second o-ring groove is exposed on the opposite side of the main housing. Catch SST-110 with free hand.
74. Install second o-ring (300358) on exposed cluster shaft groove.
75. Install both cluster shaft retaining bolts by hand with a ½-inch socket. Torque to 12 lb-ft.
76. Shift each shift fork to the neutral position.
77. Apply assembly lubricant to both shift rail seals (300387).
78. Install one shift rail seal (300387) on each shift rail.
79. Use hammer and SST-111 to drive both shift rail seals (300387) into main housing as seen in Fig. 51.

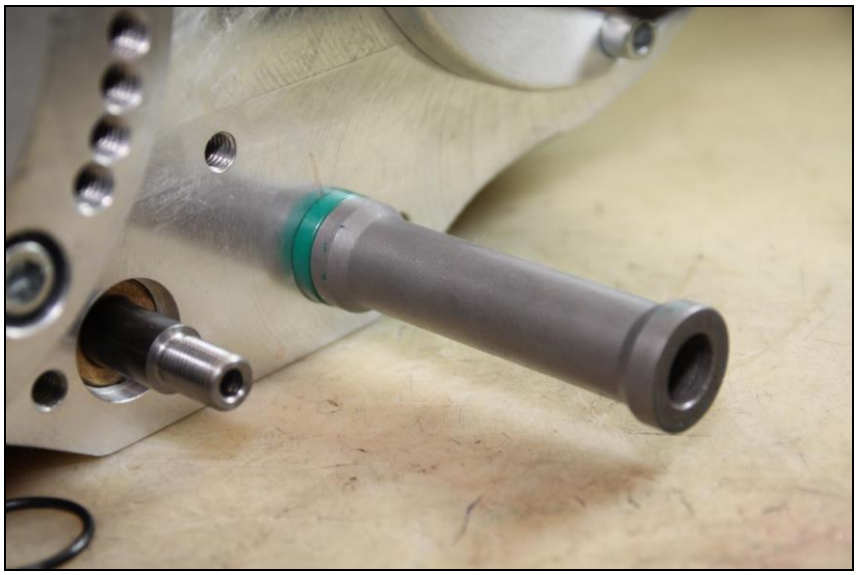

Figure 59

80. Clean the oil pan mounting flanges with solvent and a clean rag.
81. Install oil pan gasket (301400) and oil pan (301106).
82. Torque 14 oil pan retaining bolts (301401 & 301402) to 23 lb-ft
83. Install oil pan drain plug. Torque to 10 foot-pounds.
84. Install ¼-inch site tube fittings into case if case is equipped. Torque fittings to 15 lb-ft
85. Install site tube if case is equipped.
86. Install brass vent fitting on top of case or to the shifter block.

IX Torque Specifications

COMPONENT	FASTENER DESCRIPTION	QTY	BOLT SEALANT/THREADLOCK	WASHER	TORQUE SPEC. (Ft-Lbs, N-m)
HOUSING - OIL PAN - BLIND	5/16-18X1 FHCS	10	RTV SILICONE	N	23, 31
HOUSING - OIL PAN - THRU	5/16-18X1 FHCS	4	RTV SILICONE	N	23, 31
HOUSING - OIL PAN - DIVORCED	5/16-18X1 1/4 FHCS	10	RTV SILICONE	N	23, 31
HOUSING - INPUT(MARRIED/DIVORCED)	3/8-16X1 1/4 SHCS	6	RTV SILICONE	Y	40, 54
HOUSING - DIVORCED INPUT	3/8-16X1 1/4 SHCS	6	MED. STRENGTH THREADLOCK	Y	40, 54
HOUSING - REAR OUTPUT	3/8-16X1 1/4 SHCS	5	RTV SILICONE	N	35, 48
HOUSING - FRONT OUTPUT	3/8-16X1 1/4 SHCS	5	RTV SILICONE	N	35, 48
HOUSING - SHIFT RAIL	3/8-16X1 1/4 SHCS	2	RTV SILICONE	N	30, 41
HOUSING - SHIFT RAIL	3/8-16X1 3/4 SHCS	1	RTV SILICONE	N	30, 41
HOUSING - SHIFTER SUPPORT	3/8-16X1 1/4 SHCS	3	RTV SILICONE	N	30, 41
HOUSING - FRONT BRG. CAP	5/16-18X1 FHCS	4	RTV SILICONE	N	23, 34
BRACKET - DIVORCED MOUNT PAN	5/16-18X1 1/4 FHCS	10	RTV SILICONE	N	23, 31
BRACKET - DIVORCED MOUNT INPUT	3/8-16X1 1/4 SHCS	6	MED. STRENGTH THREADLOCK	Y	40, 54
SHAFT - CLUSTER	3/8-16X1/2 HHCS	2	SEAL WASHER	Y	20, 27
RETAINER - SPEEDO	5/16-16X3/4 HHCS	1	RTV SILICONE	N	10, 13
FITTING - SITE TUBE	1/4" NPT	2	RTV SILICONE	N	15, 20
FITTING - BREATHER	90 DEGREE 1/8" NPT	1	RTV SILICONE	N	10, 13
PLUG - OIL PAN	9/16-18 W/MAG	1	SEAL WASHER	Y	10, 13
PLUG - SHIFT HOUSING SWITCH BORE	5/8-18 HHCS	2	SEAL WASHER	Y	12, 16
SWITCH-4WD/LOW RANGE	5/8-18 HHCS	2	NONE	N	12, 16
SHIFT FORK - SHIFT RAIL	3/8-24X1/2 CPSS	2	MED. STRENGTH THREADLOCK	N	12, 16
NUT - YOKE - 26SPL	3/4-16 (INT. FIT)	1	SEAL WASHER	Y	130, 176
NUT - YOKE - 32SPL	7/8-20 (INT. FIT 170in-lbs)	1	SEAL WASHER	Y	150, 204

Please note that in 2014 Advance Adapters switched most of its bolts for the Atlas to a “N.D.” patch fastener. The bolts have a locking and sealing property that does not require Loctite or silicone. These bolts are reusable for up to 12 times per the manufacture specifications.

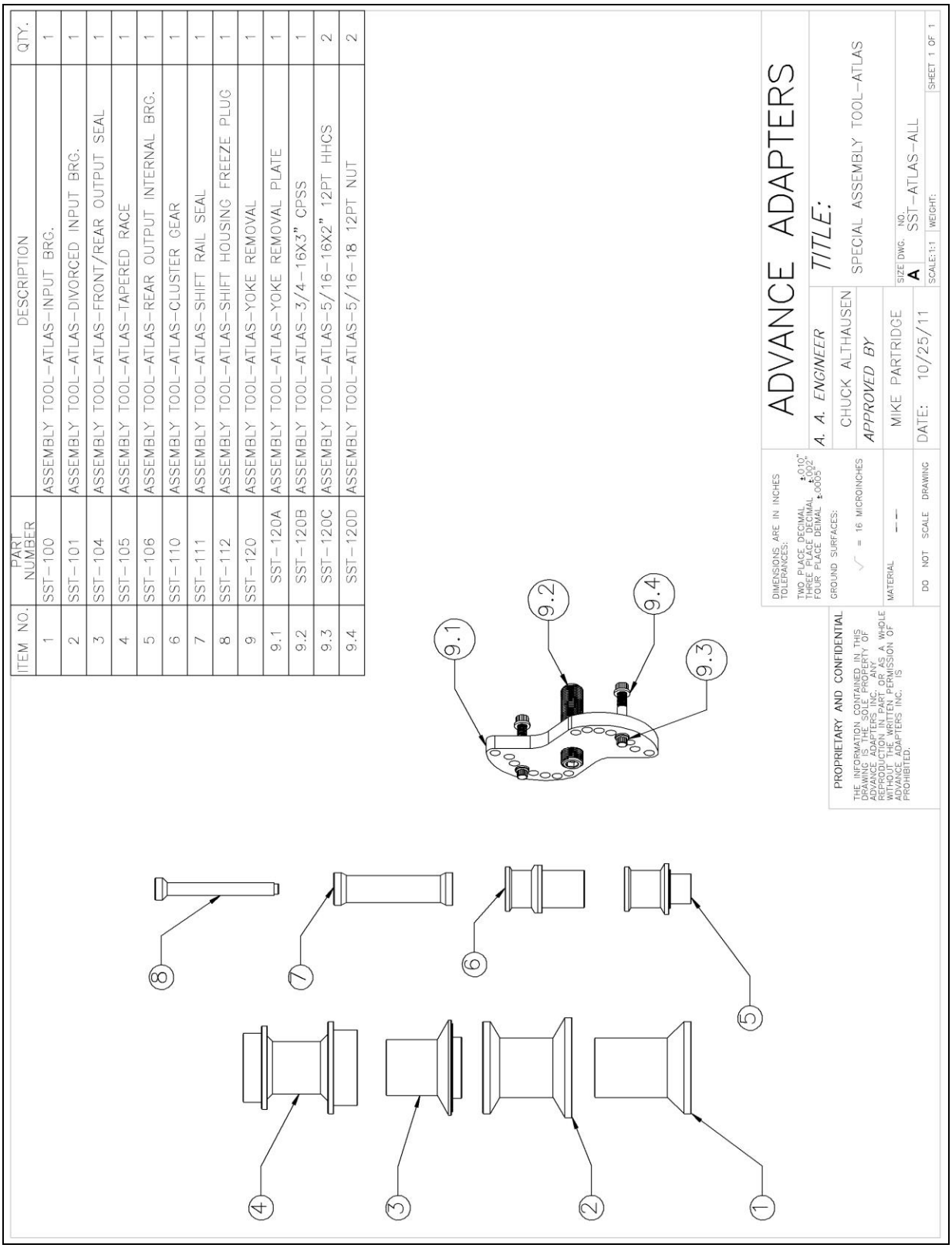
ITEM NO. | PART NUMBER | DESCRIPTION | QTY.
1 | SST-100 | ASSEMBLY TOOL-ATLAS-INPUT BRG. | 1
2 | SST-101 | ASSEMBLY TOOL-ATLAS-DIVORCED INPUT BRG. | 1
3 | SST-104 | ASSEMBLY TOOL-ATLAS-FRONT/REAR OUTPUT SEAL | 1
4 | SST-105 | ASSEMBLY TOOL-ATLAS-TAPERED RACE | 1
5 | SST-106 | ASSEMBLY TOOL-ATLAS-REAR OUTPUT INTERNAL BRG. | 1
6 | SST-110 | ASSEMBLY TOOL-ATLAS-CLUSTER GEAR | 1
7 | SST-111 | ASSEMBLY TOOL-ATLAS-SHIFT RAIL SEAL | 1
8 | SST-112 | ASSEMBLY TOOL-ATLAS-SHIFT HOUSING FREEZE PLUG | 1
9 | SST-120 | ASSEMBLY TOOL-ATLAS-YOKE REMOVAL | 1
9.1 | SST-120A | ASSEMBLY TOOL-ATLAS-YOKE REMOVAL PLATE | 1
9.2 | SST-120B | ASSEMBLY TOOL-ATLAS-3/4-16X3" CPSS | 1
9.3 | SST-120C | ASSEMBLY TOOL-ATLAS-5/16-16X2" 12PT HHCS | 2
9.4 | SST-120D | ASSEMBLY TOOL-ATLAS-5/16-18 12PT NUT | 2
9.1
9.2
9.3
9.4
8
7
6
5
4
3
2
1
DIMENSIONS ARE IN INCHES
TOLERANCES:
TWO PLACE DECIMAL ±.010"
THREE PLACE DECIMAL ±.002"
FOUR PLACE DECIMAL ±.0005"
GROUND SURFACES:
√ = 16 MICROINCHES
MATERIAL —
DO NOT SCALE DRAWING
PROPRIETARY AND CONFIDENTIAL
THE INFORMATION CONTAINED IN THIS DRAWING IS THE SOLE PROPERTY OF ADVANCE ADAPTERS INC. ANY REPRODUCTION IN PART OR AS A WHOLE WITHOUT THE WRITTEN PERMISSION OF ADVANCE ADAPTERS INC. IS PROHIBITED.
ADVANCE ADAPTERS
A. A. ENGINEER
CHUCK ALTHAUSEN
APPROVED BY
MIKE PARTRIDGE
DATE: 10/25/11
TITLE:
SPECIAL ASSEMBLY TOOL-ATLAS
SIZE A
DWG. NO. SST-ATLAS-ALL
SCALE:1:1
WEIGHT:
SHEET 1 OF 1

Figure 60

Assembly fluids:

FLUID	APPROVED MANUFACTURERS	LOCATION OF USE
MEDIUM STRENGTH THREAD LOCKING COMPOUND	LOCKTITE 271, LAWSON 87137	INPUT HOUSING BOLTS, FRONT DIVORCED MOUNT BOLTS
ANEROBIC SEALANT	LOCKTITE 518	FRONT OUTPUT--REAR BEARING RETAINER, SHIFTER RAIL HOUSING, SIHFTER HOUSING
RTV SILICONE	LAWSON 93204,93844 PERMATEX 81173	OIL PAN BOLTS, TAILHOUSING BOLTS, FRONT OUTPUT HOUSING BOLTS, YOKE SPLINES
ENGINE ASSEMBLY LUBE	ALL	CLUSTER GEAR THRUST WASHER
SYNTHETIC BEARING GREASE	ALL(W/O LITHIUM)	INPUT HOUSING SEAL
ASSEMBLY OIL	TORCO MPZ, 75W--90 GEAR OIL	LIGHT COATING APPLIED TO BEARINGS FOR INITIAL STARTUP

Figure 61

Recommended hand tools:

TOOL	DRIVE	SIZE	HEAD STYLE	DESCRIPTION	LOCATION OF USE
ARBOR PRESS	NA	2 TON	NA	2 TON MIN. CAPACITY	BEARINGS, SHAFTS, AND SEALS
PNEUMATIC IMPACT GUN	3/8"	100 FT--LB MIN.	NA	LIGHT DUTY IMPACT FOR DISASSEMBLY	VARIOUS FASTENERS
PNEUMATIC IMPACT GUN	1/2"	150 FT--LB MIN.	NA	HEAVY DUTY IMPACT FOR DISASSEMBLY	YOKE NUT REMOVAL
TORQUE WRENCH #1	3/8"	5--50FT--LB	NA	3/8" DRIVE, 5--50 FT--LB TORQUE RANGE	VARIOUS FASTENER ASSEMBLY
TORQUE WRENCH #2	1/2"	150FT--LB	NA	1/2" DRIVE, 150 FT--LB MIN. TORQUE CAPACITY	YOKE NUT ASSEMBLY
SOCKET	3/8"	T40	BHCS/TORX	USED ON ATLAS' PRIOR TO SERIAL# 10550	OIL PAN BOLTS(BHCS T40 TORX)
SOCKET	3/8"	1/2"	HHCS/6PT.	1/2" HEX HEAD	OIL PAN BOLTS/REAR BEARING CAP
SOCKET	3/8"	3/16"	SHCS	3/16" SOCKET HEAD DRIVER	SHIFT FORK RETAINING SCREWS
SOCKET	3/8"	1/2"	HHCS/12PT.	1/2" HEX HEAD	CLUSTER SHAFT RETAINING BOLTS
SOCKET	3/8"	7/8"	HHCS/6PT.	7/8" HEX HEAD	DRAIN PLUG, 4WD SWITCH
SOCKET	3/8"	5/16"	SHCS	5/16" SOCKET HEAD DRIVER	INPUT HOUSING, TAILHOUSING, SHIFT HOUSING
SOCKET	1/2"	1--1/8"	HHCS/6PT.	1--1/8" IMPACT SOCKET	YOKE NUT INSTALLATION/REMOVAL
DEPTH MICROMETER	NA	0--1"[25MM]	NA	.001"[.025MM] GRADUATION	FRONT OUTPUT--REAR BRG. ENDPLAY SETUP
RATCHET WRENCH	3/8"	NA	NA	RATCHET WRENCH USED W/ SOCKETS	USED TO START ALL FASTENERS
RETAINING RING PLIERS #1	NA	NA	NA	EXTERNAL RETAINING RING PLIERS--35MM MIN. CAPACITY, .100" MAX TIP DIAMETER.	INPUT GEAR RETAINING RING INSTALLATION
RETAINING RING PLIERS #2	NA	NA	NA	INTERNAL RETAINING RING PLIERS--70MM MIN. CAPACITY, .125" MAX TIP DIAMETER	INPUT BRG. RETAINING RING INSTALLATION(MARRIED SETUP ONLY)
RETAINING RING PLIERS #3	NA	NA	NA	EXTERNAL CONSTANT SECTION RETAINING RING PLIERS, STRAIGHT TIP, 1 3/4" CAPACITY	SPEEDOMETER WORM GEAR RETAINING RING INSTALLATION
SOCKET EXTENSION	3/8"	4" LONG	NA	SOCKET EXTENSION ADAPTER	USED WITH 3/16" SOCKET HEAD DRIVER TO INSTALL SHIFT FORK SS
DEAD BLOW HAMMER	NA	48OZ.	NA	48 OZ DEAD BLOW HAMMER OR MALLET	GENERAL ASSEMBLY/DISASSEMBLY
SEAL REMOVER	NA	NA	NA	HOOK STYLE SEAL REMOVER 1.875"--3.375" RANGE	REMOVAL OF LIP STYLE OIL SEALS

Figure 62