APCX Series
Air Cooled Packaged Chillers

Range 30 TR to 244 TR
(105 kW to 854 kW)

اجهزة تكييف هواء
AIR CONDITIONING EQUIPMENT

R-134a

ISO 9001
BUREAU VERITAS
Certification

SKM Air Cooled Packaged Chillers
APCX Series - R134a

Contents

Introduction 2
Legend.....2
Nomenclature 2
General Features 3
Main Component Features 3
Optional Features 6
Engineering Specifications 8
Capacity Ratings 12
Compressor Starting 18
Capacity Correction Factors & Operational Limits.....19
Selection Procedure 20
Water Pressure Drop 21
Typical Wiring Diagram 22
Electrical Data 24
Dimensional Data 29
Installation & Application Data 32
Loading Points.....33
Water Piping Practices 36
Guide Specifications.....40

Legend

The following legends are used throughout this manual:

AMB.....Ambient Temperature
ARI.....Air Conditioning & Refrigeration Institute
BTU .....British Thermal Unit
C.CAP.....Cooling Capacity in TR (kW refrigeration)
cfm.....Cubic feet per minute
ECWT.....Entering Chilled Water Temperature
EER .....Energy Efficiency Ratio
GPM .....Gallons Per Minute
kg.....Kilogram
kPa .....Kilo pascals
kW .....Kilowatt
lbs.....Pounds
LCWT .....Leaving Chilled Water Temperature
L/S .....Liter per second
mm.....Millimeters
PI .....Compressor Power Input in kW
Qty.....Quantity
Range.....ECWT-LCWT
TR.....Tons of Refrigeration
WFR .....Water flow rate
WPD .....Water Pressure Drop

Nomenclature

APC X - 5 1 0 0 Y

- APC — Air Cooled Packaged Chillers
- X — R-134a (Semi-Hermetic Compressor)
- 5 — Power Supply Frequency: 5 : 50 Hz
- 6 — Power Supply Frequency: 6 : 60 Hz
- 1 0 0 — Nominal Tonnage
- Y — Power Supply Code

Y : 380-415V/3Ph/50Hz
P : 440V/3Ph/50Hz
R : 380V/3Ph/60Hz
E : 460V/3Ph/60Hz
T : 220V/3Ph/60Hz

Introduction

APCX Series Air Cooled Packaged Chillers are the new generation of SKM chillers. ***APCX*** Series have quite and low vibration design and are manufactured to meet the requirements of the severe climatic conditions of the gulf.

APCX Series Chillers are ideally suited for hotels, high-rise buildings, stores, hospitals and modern cooling applications of modern manufacturing industries. ***APCX*** units are factory assembled, leak tested, evacuated, internally wired and fully charged with refrigerant R-134a. Every unit is fully tested before delivery and is ready for installation.

APCX Series Chillers are designed and manufactured in accordance with the SKM Quality Management System, approved to ISO 9001-2000 and rated in accordance with AHRI 550/590.

APCX Chillers are available in 62 models covering capacity ranges of 30 to 213 TR (105 to 746 kW) in 50 Hz and 36 to 244 TR (126 to 854 kW) in 60 Hz.

SKM Air Conditioning Equipment,

You name it.....We cool it

SKM Air Cooled Packaged Chillers APCX Series - R134a

General Features

High Energy Efficiency Ratio (EER)

APCX chillers use, exclusively, high efficiency semi-hermetic compressors having a unique valve design. EER ratings for ***APCX*** chillers at ARI conditions are listed in Capacity Ratings

Parallel Compressors Operation

APCX chillers are equipped with multiple compressors connected in parallel in order to achieve greater operating flexibility. By cycling individual compressors the system capacity can be modulated with full power savings for the compressors in operation. By using the system of parallel compressors operation, uncomplicated unload start is achieved by a simple time delay starting of single compressors as opposed to a compressor start with the total capacity.

Wide Operating Range

APCX chillers are designed, as standard, to operate at a wide range of ambient temperatures from 50°F (10°C), or lower if optional low ambient operation kit is included, to 125°F (52°C).

Main Component Features

Compressors

Compressors used in ***APCX*** series are fully accessible, semi-hermetic, reciprocating type, equipped with an oil sight glass, suction and discharge service valves and crankcase heater. These are refrigerant gas cooled and equipped with an oil pressure lubrication system. The oil pump working in either direction is protected by an oil screen and a valve provided for the fitting of an oil pressure gauge. For protection, all compressors are equipped with preset internal relief valve between suction and discharge sides.

The compressors are provided with vibration isolator mounting under the compressors skid and therefore, external to ***APCX*** chillers, AVM's may be necessary only for critical applications. The compressor motors have inherent thermal protection. This is in addition to other standard safety and protection controls.

Condensers

Condenser coils are manufactured from seamless Hi-x copper tubes mechanically bonded to aluminum fins to ensure optimum heat transfer. All coils are tested against leakage by air pressure of 450 psig (3100 KPa) under water. All standard coils are 3 or 4 rows with 14 FPI, (1.8 mm) fin spacing, 3/8" (9.5 mm) O.D. tubes.

Condenser fin materials should be matched with site conditions to inhibit coil corrosion and ensure extended equipments life.

For different application requirements, other optional condenser fin materials are available:

- Copper fins only electrotinned.
- Copper coils electro-tinned after manufacturing
- Precoated Aluminum fins
  The pre-coated is hydrophobic polyurethane resin. This option provides substantial corrosion protection beyond standard coil construction.
- Aeris Guard Coil Coating
  The Aeris Guard Coil is a self etching high performance modified epoxy finish that is specifically designed to coat and protect Aluminum and Copper surfaces. In addition, the coating is ideal for the protection of ferrous and non ferrous materials.

Condensers Fans & Motors

The condenser fans are propeller type, aluminum alloy blades, directly driven by electric motors. Motors are Totally Enclosed Air Over (TEAO) six pole with class 'F' insulation and IP55 protection. The TEAO and class 'F' insulation features ensure long life and are unique to SKM. The motors are factory wired to chiller unit control panel where the motor starters are located to control the operation of these motors. The condenser fans are individually statically and dynamically balanced at the factory. Complete fan assembly is provided with suitable acrylic coated fan guard.

Evaporator

APCX evaporators are direct expansion, shell and tube, with having 1, 2,3 or 4 refrigerant circuits. Evaporator shell is made of steel. Tubes of copper fixed to steel end plates. Baffles are provided in the water flow to increase heat transfer efficiency. Evaporators are provided with drain and vent plugs. Cooler shell is insulated with 1.0" (25mm) thick flexible closed cell insulation, K factor 0.28 Btu. in/ft².h.°F (0.04W/m.°K). Maximum working pressure of waterside is 145 psig (1000 kPa) and refrigerant side is 239.3 psig (1650 kPa).

SKM Air Cooled Packaged Chillers APCX Series - R134a

Casing/Structure

The unit casing in ***APCX*** series chillers is made of zinc coated galvanized steel sheets conforming to JIS-G 3302 and ASTM A653 which is phosphatized and baked after an electrostatic powder coat of approximately 60 microns. This finish and coating can pass a 1000 hour in 5% salt spray testing at 95°F (35°C) and 95% RH as per ASTM B117. Unit casing is provided with access doors for easy servicing/maintenance.

APCX chillers are assembled on rigid structural steel skid channels painted with two coat galvanized primer and one coat black enamel. The package is assembled for easy handling during transportation and robust support during installation and operation.

Refrigerant Piping

The refrigeration circuit piping is fabricated from ACR grade copper piping. Each refrigeration circuit includes filter drier, liquid line solenoid valve, thermostatic expansion valve, sight glass, shut off valve and hot gas muffler. For single compressor circuits, additional vibration eliminators are provided.

After fabrication the refrigeration circuit suction line is insulated with ½" (13 mm) wall thickness closed cell pipe insulation.

Electrical Control Panel

The unit mounted chiller control panel enclosure is fabricated out of heavy gauge sheet steel in phosphatized powder coated baked finish. The enclosure conforms to IP54 as per guidelines in IEC 529. A hinged access door and key-fastener is provided for easy access and security. The panel is factory wired in accordance with NEC 430 & 440, labeled, tagged and features 220V / 240V controls.

- Individual compressor and condenser fan motor contactors.
- Thermal magnetic circuit breakers for compressors and condenser fan motors.
- Circuit breaker for control circuit.
- Remote/Off/Local selector switch.
- Microprocessor master board with graphical display.
- Microprocessor expansion boards as required.
- Control Relays and control circuit fuses.
- Control circuit on/off switch and pump down switches.
- Indication light for common fault.
- Volt free contacts for run, common fault and auto mode indications.
- Provision for accepting volt free contact for remote start/ stop.
- Control terminal blocks and power terminal blocks/bus bars.

SKM Microprocessor Controller - MAGNUM

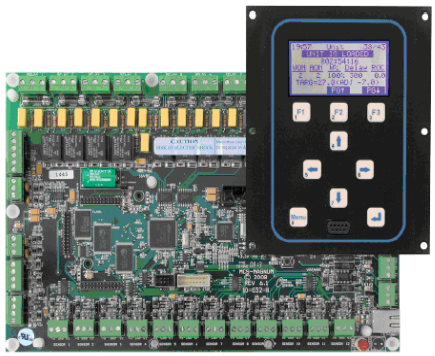

Microprocessor control system is available for ***APCX*** series chiller as a standard feature. Our high energy efficient chiller has a full function microprocessor control unit designed to keep the chiller running at its most energy efficient level. It is a rugged microprocessor based controller that is designed for the hostile environment of HVAC industry.

It provides flexibility with set points and control options that can be selected prior to commissioning a system or when the unit is live and functioning. Displays, alarms and other interfaces are accomplished in a clear and simple language that informs the user as to the status of the system. It is designed to safeguard the system that is being controlled, eliminate the need for manual intervention and to provide a simple but meaningful man-machine-interface.

This controller provides complete operational control for the chiller and has built-in auto diagnostic capability that can signal normal operation or alarm conditions as well as shutting down the chiller or system, if necessary.

The Main Features of the controller are as follows:

- A large graphical LCD Display (2.8˝ diagonal) with back-lit that can be seen in bright or dim lighting.
- A nine button generic keypad that is so user friendly, it rarely requires a reference manual.
- Battery backed up built in real time clock to program the chiller for 2 starts and 2 stops daily to provide the information about the running hours of the compressors.
- Multiple authorization levels to provide tight security of the control system.
- Two operating schedules per each day of the week and 8 holidays.
- The system provides 'last time' enabled & disabled, number of cycles, and total run hours.
- Automatic Lead/Lag changeover of the compressors.

- Pump-down at the beginning and end of every circuit cycle.
- Capacity control based on leaving chilled water temperature. A special control zone based on leaving water temperature that reduces compressor cycling, and improved unit part load efficiency.
- Start/stop facility from remote through Volt Free Contact (VFC).
- Common Run, Fault and remote mode operation status volt free contacts provided for remote signaling.

Display Information

SKM ***APCX*** chillers offer a graphics LCD display which allows the operator to access different parameters of the chiller. Operator can view and change the set point of chiller parameters. The graphical display has lot of features, trending is one of the key features of graphical display, which shows last 25 samples with an appropriate scale to allow it to fit on the display.

The well designed keypad with three function keys, four direction keys and two selection keys allows the operator to navigate through different Menu, such as:

- Status
- Outputs
- Inputs
- Alarms
- Graphs
- Set point
- Service tools
- Lockout Reset
- Lockout Alarm
- Password

System Control Philosophy

The unit may be enabled or disabled manually or through the use of an external signal from a building automation system.

Control is based upon leaving chilled water temperature. How fast the temperature changes is calculated and capacity decisions are based upon the rate, the current temperature, and the control temperature zone. Capacity is never added if the system is moving toward the temperature target at an acceptable rate. The unit will monitor all control functions and stage the compressor to maintain the required operating capacity.

Easy Accessible Measurements Include:

- Status of the chiller.
- Status of each circuit/compressor.
- Status of condenser fans.
- Leaving and Entering chilled water temperature.
- Suction pressure for each refrigerant circuit.
- Discharge pressure for each refrigerant circuit.
- Oil pressure for each compressor.
- Ampere draw for each compressor.
- Ambient temperature.
- All active set points.
- Run time for each compressor.
- Number of compressor starts.
- Lockout and alarm status.
- Status of water flow switch, compressor internal motor. protector, run/stop input and pump down switches.
- Log of last 100 alarms.
- Lead compressor identification.
- Date and time.
- Graphs of all inputs and outputs.

System Protection

The following system protection controls will automatically act to insure system reliability and protection of the unit.

- Low suction pressure protection.
- High discharge pressure protection.
- Low discharge pressure protection.
- Low oil pressure protection.
- High compressor motor winding temperature protection.
- High compressor ampere protection.
- Compressor internal thermal protection.
- Freeze protection.
- Chilled water flow loss protection.
- Sensor error protection.
- Pump down.
- Anti-recycle.
- Time delay between stages.
- 4-Levels of passwords to restrict the intentional mishandling.

Optional Features available for Magnum

PC Support Software for Magnum

PC software to communicate with ***APCX*** microprocessor is available as an optional feature. Software is named **MCS-Connect** and it can provide both local and remote communications to the chiller microprocessor. This program allows viewing the entire status of chiller, inputs, outputs, set points, alarms, graphs etc. Through proper authorization, changes can be made to the system. Configuration files can be transmitted to or received from the unit. Communication between PC and chiller microprocessor can be made through RS-232 serial port or Ethernet port.

If there is more than one chiller, these chillers can be connected together via Rs-485 network which can support up to 20 chillers.

Access to this network can be local, via RS 232 or Ethernet connection, or remote via 14.4K Baud modem. Each chiller in the network must be assigned to a unique address. This address can be changed from the LCD/keypad of the unit or through **MCS-Connect** software. RS 232 transmission should not exceed 50 feet in length and RS 485 transmission should not exceed 1 mile without repeater. For Ethernet communication, it is necessary to use a crossover cable when connected directly to a PC.

This software can run with Windows 2000 or newer version.

BMS Communication

BMS communication with the chiller microprocessor is possible through hardwired signals or major BMS protocols.

Hard Wired of BMS Connection

Volt free contacts for Run, Common fault and Auto mode indications and provision for remote start/stop are provided as standard feature. In addition to these, below options can be provided if specified.

- Emergency Stop – A volt free contact from BMS to chiller, which is normally closed and opens on an emergency shut down condition. It will make the chiller to shut down immediately bypassing normal shut down procedure.
- Chilled water reset – A 0-5VDC signal from BMS to chiller, which allows resetting chilled water set point around an acceptable range.

BMS Protocols

The chiller controller is capable to interface with four major building management systems, which are BACnet, Modbus, Lonworks and Johnson N2, by adding optional hardware. This interface allows to monitor the status of chiller and individual circuits, all inputs and outputs, chilled water set point etc. The required BMS protocol and number of chillers needs to be specified during the time of order as costing of the BMS interface involves these parameters.

Optional Features

Factory Installed

Low Ambient Operation Kit (LAO)
For operation down to 25°F (-4°C) ambient. Specify minimum design ambient temperature on order.

Alternative Condenser Material
Made of copper tubes and alternative fin material and/or protective coating.

- For Copper Fins specify **(FC)**
- For Copper Fins only electrotinned **(CFT)**
- For Copper Coil electrotinned specify **(FCT)**
- For Pre Coated Aluminum Fins specify **(FAP)**
- For Aluminum Fins with Aeris Coat Protection specify **(FAA)**
- For Copper Fins with Aeris Coat Protection specify **(FCA)**

Galvanised Frame (GFB)
Hot dip galvanised after manufacture, steel frame and base.

IP55 Control Panel (ICP)
Control Panel for special applications to meet IP55 requirements.

Evaporator Casing (ECA/ECG/ECS)
Shell and insulation casing enclosed in a jacket/casing of aluminum, galvanized or stainless steel as required.

Condenser Coil Guard (CGP)
Coil wire mesh guard, in galvanised and painted finish, for condensers. Recommended on ground level installations where coil needs to be protected against vandalism.

Electronic Expansion Valve (EEV)
To provide energy saving benefits over mechanical thermostatic expansion valve (TXV).

Part Winding Start (PWS)
To reduce starting current of compressors. Compressor motor winding is split into two parts. First part winding will be switched on first and after a delay of 1 second, second part winding will be switched on. **(Some compressors are with part winding as standard. Please refer table-5 of page-18.)**

Individual Refrigerant Circuit (IRC)
For independent refrigeration circuits other than standard arrangement shown, consult SKM.

Load Limit Control Kit (LCK)
To prevent nuisance trip-out when the entering chilled water temperature is above 76°F (24.4°C) at start up or where chillers may be subject to shut down for long periods during season.

Voltage Monitoring Module (VMM)
To prevent ***APCX*** unit operation in the event of phase loss, phase reversal, and under voltage/over voltage on the incoming line voltage.

Voltage Monitoring Module as per DEWA (DVM)
Under voltage relay as per DEWA regulations. This option is available for Dubai, UAE only.

Evaporator Freeze-Up Protection (EFP)
Heating cable with thermostat to prevent evaporator freeze-up where low ambient temperatures below 32°F (0°C) are anticipated without chiller operation.

Ammeter and Phase Selector Switch (AMPI)
To indicate running Amperes on main incomer/incomers of a chiller.

Voltmeter and Selector Switch (VSS)
For incoming line voltage.

Pressure Gauges (SDG)
Suction and discharge and oil pressure indication of each refrigerant circuit. Gauges mounted outside the Control Panel.

Low Noise Fan & Motor (LNF)
Low noise Fan & Motor assembly can be provided for applications where minimal unit sound is required.

Vibration Eliminator (DVE)
For parallel compressor circuiting, vibration eliminators can be provided as an option.

Capacity Control Steps (CRS1 & CRS2)
Where loads may vary greatly and finer capacity control is desired, the standard control steps may not be suffice. Additional capacity control steps are available as options CRS1 and CRS2. See page 20 for this additional control options available.

Marine Paint (MP)
To provide increased corrosion resistant in coastal environments and off-shore locations.

Compressor Sound Enclosure (CSE)
To reduce compressor sound, compressor sound enclosure with isulated panels is mounted around the compressor.

ASME Stamped Evaporator (STE)
Shell and Tube evaporator with ASME stamp.

Note : Some optional items are not applicable, for all sizes/ models, consult SKM.

Options for Field Installation

Chilled Water Flow Switch (CWFS)

Anti-Vibration, Spring Type (CAVM)

SKM Air Cooled Packaged Chillers
APCX Series - R134a

ENGINEERING SPECIFICATIONS - 50 Hz

Model		APCX	5030	5040	5045	5050	5060	5065	5070	5075
Cooling Capacity (1)		TR	31.7	37.2	44.4	50.3	57.0	66.2	69.5	75.5
		kW	111.5	130.7	156.2	176.7	200.4	232.9	244.2	265.4
Cooling Capacity (2)		TR	27.3	32.1	38.3	43.1	48.9	56.9	59.7	64.6
		kW	96.0	112.9	134.7	151.5	171.9	200.1	209.9	227.1
Compressor		-	Semi-Hermetic Reciprocating Discus 1450 rpm							
1	Code / Qty	- / #	2	2	2	2	3	1	3	1
	Oil (Polyol Ester) Charge	USGal	1.1 x 2	1.9 x 2	2.0 x 2	2.0 x 2	1.9 x 3	1.9 x 3	2.0 x 3	2.0 x 1
		Litre	4.3 x 2	7.4 x 2	7.7 x 2	7.7 x 2	7.4 x 3	7.4 x 3	7.7 x 3	7.7 x 1
2	Code / Qty	- / #	-	-	-	-	-	2	-	2
	Oil (Polyol Ester) Charge	USGal	-	-	-	-	-	2.0 x 2	-	2.0 x 2
		Litre	-	-	-	-	-	7.7 x 2	-	7.7 x 2
Condenser Coil		-	Air-cooled 3 or 4 rows, 14 fpi (2.1mm) fin spacing, copper tubes aluminum fins							
	Area	ft²	71.1		88.9		106.7	124.4	133.3	133.3
		m²	6.6		8.3		9.9	11.5	12.4	12.4
Condenser Fan (823)		-	Propeller direct drive 960 rpm							
	Qty	#	4				6			
	Airflow Rate	cfm	37220	36012	37596	37596	54018	55746	56394	56394
		l/s	17564	16994	17742	17742	25491	26307	26612	26612
Condenser Fan Motor		-	Totally enclosed air over, Class-F insulation, 6 pole, IP-55 protected							
	Size / Qty	kW x #	1.1 x 4				1.1 x 6			
Evaporator		-	Direct Expansion shell & tube							
	Code / Qty	#	1							
	Ref. Circuits	#	1				3			
	Water Volume	USGal	11.04	16.57	15.35	15.35	16.64	23.2	23.2	23.2
		Litre	41.8	62.7	58.1	58.1	63	88	88	88
Refrigerant Charge (R134a)		Lb	67	82	97	97	127	140	147	147
		Kg	30	37	44	44	57	64	67	67
Operating Weight (Approx.)		Lb	4132	4543	5221	5227	6634	7277	7590	7595
		Kg	1874	2060	2368	2371	3009	3300	3442	3444

Model		APCX	5130	5135	5140	5145	5150	5155	5160	5165
Cooling Capacity (1)		TR	128.3	135.9	139.5	146.0	152.3	158.3	162.1	168.2
		kW	451.0	477.7	490.6	513.3	535.3	556.7	570.1	591.3
Cooling Capacity (2)		TR	110.7	117.2	120.3	125.6	130.8	135.8	139.3	144.4
		kW	389.1	412.1	423.0	441.6	459.9	477.5	489.8	507.7
Compressor		-	Semi-Hermetic Reciprocating Discus 1450 rpm							
1	Code / Qty	- / #	3	1	6	4	2	6	6	4
	Oil (Polyol Ester) Charge	USGal	1.9 x 3	1.9 x 1	2.0 x 6	2.0 x 4	2.0 x 2	2.0 x 6	1.9 x 6	1.9 x 4
		Litre	7.4 x 3	7.4 x 1	7.7 x 6	7.7 x 4	7.7 x 2	7.7 x 6	7.4 x 6	7.4 x 4
2	Code / Qty	- / #	3	5	-	2	4	-	2	4
	Oil (Polyol Ester) Charge	USGal	2.0 x 3	2.0 x 5	-	2.0 x 2	2.0 x 4	-	2.0 x 2	2.0 x 4
		Litre	7.7 x 3	7.7 x 5	-	7.7 x 2	7.7 x 4	-	7.7 x 2	7.7 x 4
Condenser Coil		-	Air-cooled 3 or 4 rows, 14 fpi (2.1mm) fin spacing, copper tubes aluminum fins							
	Area	ft²	213.3	248.8	266.7				284.4	
		m²	19.8	23.1	24.8				26.4	
Condenser Fan (823)		-	Propeller direct drive 960 rpm							
	Qty	#	12						16	
	Airflow Rate	cfm	108036	111492	112788	112788	112788	112788	144048	144048
		l/s	50982	52613	53225	53225	53225	53225	67976	67976
Condenser Fan Motor		-	Totally enclosed air over, Class-F insulation, 6 pole, IP-55 protected							
	Size / Qty	kW x #	1.1 x 12						1.1 x 16	
Evaporator		-	Direct Expansion shell & tube							
	Qty	#	1							
	Ref. Circuits	#	3						4	
	Water Volume	USGal	38	38	38	38	38	38	67.3	67.3
		Litre	144	144	144	144	144	144	254.8	254.8
Refrigerant Charge (R134a)		Lb	255	282	295	295	295	295	327	327
		Kg	115	128	134	134	134	134	148	148
Operating Weight (Approx.)		Lb	14640	15648	16173	16176	16181	16187	19648	20005
		Kg	6639	7097	7335	7336	7338	7341	8911	9073

Table 1

Notes :

1). Capacity ratings are based on standard AHRI 550-590 conditions of 95°F (35°C) ambient, 44°F (6.7°C) leaving chilled water temperature, 10°F (5.5°C) range and 0.0001 ft².h°F/Btu (0.018 m².°C/kW) fouling factor

2). Capacity ratings are based on 115°F (46°C) ambient, 45°F (7.2°C) leaving chilled water temperature, 10°F (5.5°C) range and 0.0001 ft².h°F/Btu (0.018m².°C/kW) fouling factor.

SKM Air Cooled Packaged Chillers
APCX Series - R134a

ENGINEERING SPECIFICATIONS - 50 Hz

APCX	5080	5085	5090	5095	5100	5105	5110	5120	5125
TR	78.4	86.0	89.1	92.3	98.6	104.7	113.0	119.0	125.7
kW	275.5	302.2	313.3	324.4	346.8	368.2	397.3	418.3	442.0
TR	67.5	74.1	76.8	79.4	84.7	89.7	97.2	102.4	108.2
kW	237.3	260.5	270.0	279.2	297.8	315.4	341.8	360.0	380.4
-	Semi-Hermetic Reciprocating Discus 1450 rpm								
- / #	4	2	1	4	2	4	2	6	4
USGal	1.9 x 4	1.9 x 2	1.9 x 1	2.0 x 4	2.0 x 2	2.0 x 4	1.1 x 2	1.9 x 6	1.9 x 4
Litre	7.4 x 4	7.4 x 2	7.4 x 1	7.7 x 4	7.7 x 2	7.7 x 4	4.3 x 2	7.4 x 6	7.4 x 4
- / #	-	2	3	-	2	-	4	-	2
USGal	-	2.0 x 2	2.0 x 3	-	2.0 x 2	-	1.9 x 4	-	2.0 x 2
Litre	-	7.7 x 2	7.7 x 3	-	7.7 x 2	-	7.4 x 4	-	7.7 x 2
-	Air-cooled 3 or 4 rows, 14 fpi (2.1mm) fin spacing, copper tubes aluminum fins								
ft²	142.2	177.7					213.3		
m²	13.2	16.5					19.8		
-	Propeller direct drive 960 rpm								
#	8						12		
cfm	72024	75192	75192	75192	75192	75192	110436	108036	108036
l/s	33988	35483	35483	35483	35483	35483	52115	50982	50982
-	Totally enclosed air over, Class-F insulation, 6 pole, IP-55 protected								
kW x #	1.1 x 8						1.1 x 12		
-	Direct Expansion shell & tube								
- x #	1	1	1	1	1	1	1	1	1
#	2						3		
USGal	34.21	34.21	34.21	34.21	34.21	34.21	40	40	40
Litre	129.5	129.5	129.5	129.5	129.5	129.5	150	150	150
Lb	168	168	182	195	195	200	204	245	245
Kg	76	76	82	89	89	91	93	111	111
Lb	9415	9771	10207	10749	10754	10758	13763	14104	14461
Kg	4270	4431	4629	4875	4877	4879	6242	6396	6558

APCX	5175	5180	5190	5200	5205	5210
TR	175.3	182.1	195.0	201.4	207.7	213.8
kW	616.4	640.4	685.5	708.2	730.3	751.8
TR	150.5	156.3	167.7	173.0	178.1	183.1
kW	529.2	549.6	589.6	608.3	626.2	643.8
-	Semi-Hermetic Reciprocating Discus 1450 rpm					
- / #	2	8	6	4	2	8
USGal	1.9 x 2	2.0 x 8	2.0 x 6	2.0 x 4	2.0 x 2	2.0 x 8
Litre	7.4 x 2	7.7 x 8	7.7 x 6	7.7 x 4	7.7 x 2	7.7 x 8
- / #	6	-	2	4	6	-
USGal	2.0 x 6	-	2.0 x 2	2.0 x 4	2.0 x 6	-
Litre	7.7 x 6	-	7.7 x 2	7.7 x 4	7.7 x 6	-
-	Air-cooled 3 or 4 rows, 14 fpi (2.1mm) fin spacing, copper tubes aluminum fins					
ft²	320.0	355.6				
m²	29.7	33.0				
-	Propeller direct drive 960 rpm					
#	16					
cfm	147664	150384	150384	150384	150384	150384
l/s	69683	70966	70966	70966	70966	70966
-	Totally enclosed air over, Class-F insulation, 6 pole, IP-55 protected					
kW x #	1.1 x 16					
-	Direct Expansion shell & tube					
#	1					
#	4					
USGal	67.3	67.3	64	64	64	64
Litre	254.8	254.8	240	240	240	240
Lb	327	381	381	381	381	381
Kg	148	173	173	173	173	173
Lb	21076	21962	22046	22049	22055	22060
Kg	9558	9960	9998	10000	10002	10005

Table 1 ends

Notes :

1). Capacity ratings are based on standard AHRI 550-590 conditions of 95°F (35°C) ambient, 44°F (6.7°C) leaving chilled water temperature, 10°F (5.5°C) range and 0.0001 ft².h°F/Btu (0.018 m².°C/kW) fouling factor.

2). Capacity ratings are based on 115°F (46°C) ambient, 45°F (7.2°C) leaving chilled water temperature, 10°F (5.5°C) range and 0.0001 ft².h°F/Btu (0.018m².°C/kW) fouling factor.

SKM Air Cooled Packaged Chillers
APCX Series - R134a

ENGINEERING SPECIFICATIONS - 60 Hz

Model		APCX	6035	6045	6050	6060	6065	6075	6080	6085
Cooling Capacity (1)		TR	36.2	42.6	54.4	61.2	68.0	75.5	79.5	86.9
		kW	127.3	149.8	191.3	215.2	239.1	265.5	279.5	305.5
Cooling Capacity (2)		TR	31.0	36.7	46.8	52.9	58.4	65.0	68.4	74.5
		kW	109.0	129.0	164.5	186.0	205.3	228.5	240.5	261.9
Compressor		-	Semi-Hermetic Reciprocating Discus 1750 rpm							
1	Code / Qty	- / #	2	2	2	2	3	1	3	1
	Oil (Polyol Ester) Charge	USGal	1.1 x 2	1.9 x 2	2.0 x 2	2.0 x 2	1.9 x 3	1.9 x 3	2.0 x 3	2.0 x 1
		Litre	4.3 x 2	7.4 x 2	7.7 x 2	7.7 x 2	7.4 x 3	7.4 x 3	7.7 x 3	7.7 x 1
2	Code / Qty	- / #	-	-	-	-	-	2	-	2
	Oil (Polyol Ester) Charge	USGal	-	-	-	-	-	2.0 x 2	-	2.0 x 2
		Litre	-	-	-	-	-	7.7 x 2	-	7.7 x 2
Condenser Coil		-	Air-cooled 3 or 4 rows, 14 fpi (2.1mm) fin spacing, copper tubes aluminum fins							
	Area	ft²	71.1		88.9		106.7	124.4	133.3	133.3
		m²	6.6		8.3		9.9	11.5	12.4	12.4
Condenser Fan (823)		-	Propeller direct drive 960 rpm							
	Qty	#	4				6			
	Airflow Rate	cfm	45308	43828	45772		65742	67854	68658	68658
		l/s	21383	20685	21383		31027	32024	32403	32403
Condenser Fan Motor		-	Totally enclosed air over, Class-F insulation, 6 pole, IP-55 protected							
	Size / Qty	kW x #	1.5 x 4				1.5 x 6			
Evaporator		-	Direct Expansion shell & tube							
	Code / Qty	#	1							
	Ref. Circuits	#	1				3			
	Water Volume	USGal	11.04	16.57	15.35	15.35	28	23.2	23.2	23.2
		Litre	41.8	62.7	58.1	58.1	106	88	88	88
Refrigerant Charge (R134a)		Lb	67	82	97	97	127	140	147	147
		Kg	30	37	44	44	57	64	67	67
Operating Weight (Approx.)		Lb	4132	4543	5221	5227	6634	7277	7590	7595
		Kg	1874	2060	2368	2371	3009	3300	3442	3444

Model		APCX	6145	6155	6160	6170	6175	6185	6190	6195
Cooling Capacity (1)		TR	147.4	156.1	164.0	171.5	178.8	185.9	191.6	199.0
		kW	518.3	548.8	576.6	603.0	628.7	653.6	673.7	699.7
Cooling Capacity (2)		TR	126.8	134.2	140.8	146.9	152.9	158.6	165.0	171.1
		kW	445.8	471.8	495.1	516.5	537.6	557.6	580.1	601.6
Compressor		-	Semi-Hermetic Reciprocating Discus 1750 rpm							
1	Code / Qty	- / #	3	1	6	4	2	6	6	4
	Oil (Polyol Ester) Charge	USGal	1.9 x 3	1.9 x 1	2.0 x 6	2.0 x 4	2.0 x 2	2.0 x 6	1.9 x 6	1.9 x 4
		Litre	7.4 x 3	7.4 x 1	7.7 x 6	7.7 x 4	7.7 x 2	7.7 x 6	7.4 x 6	7.4 x 4
2	Code / Qty	- / #	3	5	-	2	4	-	2	4
	Oil (Polyol Ester) Charge	USGal	2.0 x 3	2.0 x 5	-	2.0 x 2	2.0 x 4	-	2.0 x 2	2.0 x 4
		Litre	7.7 x 3	7.7 x 5	-	7.7 x 2	7.7 x 4	-	7.7 x 2	7.7 x 4
Condenser Coil		-	Air-cooled 3 or 4 rows, 14 fpi (2.1mm) fin spacing, copper tubes aluminum fins							
	Area	ft²	213.3	248.8	266.7				284.4	
		m²	19.8	23.1	24.8				26.4	
Condenser Fan (823)		-	Propeller direct drive 960 rpm							
	Qty	#	12						16	
	Airflow Rate	cfm	131484.0	135708.0	137316.0				175312.0	
		l/s	62053.9	64047.4	64806.3				82738.5	
Condenser Fan Motor		-	Totally enclosed air over, Class-F insulation, 6 pole, IP-55 protected							
	Size / Qty	kW x #	1.5 x 12							
Evaporator		-	Direct Expansion shell & tube							
	Qty	#	1							
	Ref. Circuits	#	3						4	
	Water Volume	USGal	38	42.72	42.72	42.72	42.72	42.72	42.72	34.21 x 2
		Litre	144	161.7	161.7	161.7	161.7	161.7	161.7	129.5 x 2
Refrigerant Charge (R134a)		Lb	255	255	282	295	295	295	295	327
		Kg	115	115	128	134	134	134	134	148
Operating Weight (Approx.)		Lb	14640	15648	16173	16176	16181	16187	19648	20005
		Kg	6639	7097	7335	7336	7338	7341	8911	9073

Table 2

Notes :

1). Capacity ratings are based on standard AHRI 550-590 conditions of 95°F (35°C) ambient, 44°F (6.7°C) leaving chilled water temperature, 10°F (5.5°C) range and 0.0001 ft².h°F/Btu (0.018 m².°C/kW) fouling factor.

2). Capacity ratings are based on 115°F (46°C) ambient, 45°F (7.2°C) leaving chilled water temperature, 10°F (5.5°C) range and 0.0001 ft².h°F/Btu (0.018m².°C/kW) fouling factor.

SKM Air Cooled Packaged Chillers
APCX Series - R134a

ENGINEERING SPECIFICATIONS - 60 Hz

APCX	6090	6100	6105	6110	6115	6125	6130	6135	6140
TR	92.5	102.0	105.8	109.6	117.3	124.6	129.5	136.4	143.8
kW	325.2	358.6	372.0	385.4	412.4	438.1	455.3	479.6	505.6
TR	80.0	88.0	91.3	94.4	100.7	106.7	111.7	117.7	123.9
kW	281.3	309.4	321.0	331.9	354.1	375.2	392.7	413.8	435.6
-	Semi-Hermetic Reciprocating Discus 1750 rpm								
- / #	4	2	1	4	2	4	2	6	4
USGal	1.9 x 4	1.9 x 2	1.9 x 1	2.0 x 4	2.0 x 2	2.0 x 4	1.1 x 2	1.9 x 6	1.9 x 4
Litre	7.4 x 4	7.4 x 2	7.4 x 1	7.7 x 4	7.7 x 2	7.7 x 4	4.3 x 2	7.4 x 6	7.4 x 4
- / #	-	2	3	-	2	-	4	-	2
USGal	-	2.0 x 2	2.0 x 3	-	2.0 x 2	-	1.9 x 4	-	2.0 x 2
Litre	-	7.7 x 2	7.7 x 3	-	7.7 x 2	-	7.4 x 4	-	7.7 x 2
-	Air-cooled 3 or 4 rows, 14 fpi (2.1mm) fin spacing, copper tubes aluminum fins								
ft²	142.2	177.7					213.3		
m²	13.2	16.5					19.8		
-	Propeller direct drive 960 rpm								
#	8						12		
cfm	87656	91544					134436	131484	131484
l/s	41369	43204					63447	62054	62054
-	Totally enclosed air over, Class-F insulation, 6 pole, IP-55 protected								
kW x #	1.1 / 6	1.5 x 8						1.5 x 12	
-	Direct Expansion shell & tube								
#	1								
#	2						3		
USGal	34.21	34.21	34.21	34.21	34.21	34.21	29.99	29.99	29.99
Litre	129.5	129.5	129.5	129.5	129.5	129.5	113.5	113.5	113.5
Lb	168	168	182	195	195	200	204	245	245
Kg	76	76	82	89	89	91	93	111	111
Lb	9415	9771	10207	10749	10754	10758	13763	14104	14461
Kg	4270	4431	4629	4875	4877	4879	6242	6396	6558

APCX	6205	6215	6220	6230	6235	6240
TR	208.0	216.6	223.9	231.0	237.8	244.3
kW	731.3	761.6	787.2	812.2	836.1	859.0
TR	178.6	185.7	191.6	197.3	202.8	208.0
kW	628.0	652.9	673.7	693.7	713.0	731.3
-	Semi-Hermetic Reciprocating Discus 1750 rpm					
- / #	2	8	6	4	2	8
USGal	1.9 x 2	2.0 x 8	2.0 x 6	2.0 x 4	2.0 x 2	2.0 x 8
Litre	7.4 x 2	7.7 x 8	7.7 x 6	7.7 x 4	7.7 x 2	7.7 x 8
- / #	6	-	2	4	6	-
USGal	2.0 x 6	-	2.0 x 2	2.0 x 4	2.0 x 6	-
Litre	7.7 x 6	-	7.7 x 2	7.7 x 4	7.7 x 6	-
-	Air-cooled 3 or 4 rows, 14 fpi (2.1mm) fin spacing, copper tubes aluminum fins					
ft²	320.0	355.6				
m²	29.7	33.0				
-	Propeller direct drive 960 rpm					
#	16					
cfm	179728	183088				
l/s	84823	86408				
-	Totally enclosed air over, Class-F insulation, 6 pole, IP-55 protected					
kW x #	1.5 x 16					
-	Direct Expansion shell & tube					
#	1					
#	4					
USGal	34.21 x 2	34.21 x 2	34.21 x 2	34.21 x 2	34.21 x 2	34.21 x 2
Litre	129.5 x 2	129.5 x 2	129.5 x 2	129.5 x 2	129.5 x 2	129.5 x 2
Lb	327	381	381	381	381	381
Kg	148	173	173	173	173	173
Lb	21076	21962	22046	22049	22055	22060
Kg	9558	9960	9998	10000	10002	10005

Table 2 ends

Notes :

1). Capacity ratings are based on standard AHRI 550-590 conditions of 95°F (35°C) ambient, 44°F (6.7°C) leaving chilled water temperature, 10°F (5.5°C) range and 0.0001 ft².h°F/Btu (0.018 m².°C/kW) fouling factor.

2). Capacity ratings are based on 115°F (46°C) ambient, 45°F (7.2°C) leaving chilled water temperature, 10°F (5.5°C) range and 0.0001 ft².h°F/Btu (0.018m².°C/kW) fouling factor.

SKM Air Cooled Packaged Chillers
APCX Series - R134a

CAPACITY RATINGS - 50 Hz

Model APCX	LCWT	Condenser Entering Air Temperature °F (°C)																			
		95°F (35°C)				105°F (40.6°C)				115°F (46.1°C)				120°F (48.9°C)				125°F (51.7°C)			
		CCap	PI*	WFR	WPD	CCap	PI*	WFR	WPD	CCap	PI*	WFR	WPD	CCap	PI*	WFR	WPD	CCap	PI*	WFR	WPD
	°F	TR	kW	USgpm	ft.wg	TR	kW	USgpm	ft.wg	TR	kW	USgpm	ft.wg	TR	kW	USgpm	ft.wg	TR	kW	USgpm	ft.wg
EER	°C	kW	kW	l/s	ft.wg	kW	kW	l/s	ft.wg	kW	kW	l/s	ft.wg	kW	kW	l/s	ft.wg	kW	kW	l/s	ft.wg
	42	30.5	32.2	73.2	4.2	28.1	33.7	67.4	3.4	25.6	35	61.5	2.6	24.5	35.7	58.8	2.2	23.4	36.4	56.1	1.8
	5.6	107.2	32.2	4.6	12.5	98.8	33.7	4.3	10.3	90.2	35	3.9	7.9	86.2	35.7	3.7	6.7	82.2	36.4	3.5	5.4
	44	31.7	32.7	76.2	4.6	29.3	34.3	70.2	3.8	26.7	35.8	64.1	3	25.6	36.5	61.3	2.6	24.4	37.2	58.5	2.2
5030	6.7	111.7	32.7	4.8	13.7	102.9	34.3	4.4	11.4	94	35.8	4	9	89.9	36.5	3.9	7.8	85.7	37.2	3.7	6.5
10.3	45	32.4	33	77.7	4.8	29.9	34.6	71.7	4	27.3	36.1	65.4	3.2	26.1	36.9	62.6	2.8	24.9	37.6	59.7	2.4
	7.2	113.9	33	4.9	14.3	105	34.6	4.5	12	95.9	36.1	4.1	9.5	91.7	36.9	3.9	8.3	87.5	37.6	3.8	7.1
	48	34.3	33.8	82.4	5.4	31.7	35.6	76	4.6	28.9	37.2	69.4	3.7	27.7	38	66.4	3.3	26.4	38.8	63.4	2.9
	8.9	120.8	33.8	5.2	16.1	111.3	35.6	4.8	13.6	101.7	37.2	4.4	11.1	97.4	38	4.2	9.9	93	38.8	4	8.7
	42	35.7	39	85.7	6.6	32.9	40.9	79	10.1	30.2	42.7	72.4	15.4	28.9	43.6	69.3	18.4	27.6	44.5	66.3	21.8
	5.6	125.5	39	5.4	19.7	115.8	40.9	5	30.2	106.1	42.7	4.6	45.9	101.6	43.6	4.4	54.9	97.2	44.5	4.2	65.1
	44	37.2	39.9	89.4	5.3	34.3	41.9	82.4	8.1	31.4	43.8	75.4	12.7	30.1	44.7	72.2	15.5	28.7	45.7	69	18.7
5040	6.7	131	39.9	5.6	15.8	120.8	41.9	5.2	24.3	110.5	43.8	4.8	38.1	105.8	44.7	4.6	46.4	101.1	45.7	4.4	56
10.1	45	38	40.3	91.3	4.8	35.1	42.4	84.2	7.3	32.1	44.3	77	11.5	30.7	45.3	73.7	14.2	29.3	46.2	70.4	17.3
	7.2	133.7	40.3	5.8	14.3	123.4	42.4	5.3	21.7	112.8	44.3	4.9	34.5	108	45.3	4.6	42.4	103.1	46.2	4.4	51.7
	48	40.5	41.7	97.2	3.8	37.4	44	89.7	5.2	34.2	45.9	82	8.4	32.7	47	78.5	10.5	31.2	47.9	74.9	13.1
	8.9	142.5	41.7	6.1	11.5	131.4	44	5.7	15.5	120.1	45.9	5.2	25	115	47	5	31.4	109.8	47.9	4.7	39.2
	42	42.5	46.1	102	3.1	39.2	48.8	94.1	3.3	35.8	51.2	85.9	3.9	34.3	52.4	82.2	4.3	32.7	53.5	78.5	4.7
	5.6	149.5	46.1	6.4	9.1	137.8	48.8	5.9	10	125.9	51.2	5.4	11.7	120.5	52.4	5.2	12.9	115	53.5	5	14.2
	44	44.4	47	106.6	3	41	49.8	98.3	3.2	37.4	52.3	89.9	3.6	35.8	53.5	86	3.9	34.2	54.7	82.1	4.3
5045	6.7	156.3	47	6.7	9	144.1	49.8	6.2	9.4	131.7	52.3	5.7	10.8	126	53.5	5.4	11.7	120.4	54.7	5.2	12.9
10.4	45	45.5	47.5	109.1	3	41.9	50.3	100.6	3.1	38.3	52.8	91.9	3.5	36.7	54.1	88	3.8	35	55.3	84.1	4.1
	7.2	159.9	47.5	6.9	9	147.4	50.3	6.3	9.2	134.7	52.8	5.8	10.4	129	54.1	5.6	11.2	123.2	55.3	5.3	12.3
	48	48.5	48.8	116.5	3.2	44.8	51.8	107.5	3	40.9	54.4	98.3	3.2	39.2	55.8	94.1	3.3	37.5	57.1	89.9	3.6
	8.9	170.7	48.8	7.4	9.4	157.5	51.8	6.8	9	144	54.4	6.2	9.4	137.9	55.8	5.9	10	131.8	57.1	5.7	10.8
	42	48.2	55.6	115.6	3.1	44.3	58.5	106.3	3	40.4	61	96.9	3.2	38.6	62.4	92.7	3.4	36.9	63.7	88.5	3.7
	5.6	169.4	55.6	7.3	9.3	155.8	58.5	6.7	9	142.1	61	6.1	9.6	135.9	62.4	5.8	10.2	129.7	63.7	5.6	11.1
	44	50.3	56.8	120.6	3.3	46.2	59.7	110.9	3	42.1	62.4	101.2	3.1	40.3	63.9	96.8	3.2	38.5	65.2	92.4	3.4
5050	6.7	176.8	56.8	7.6	9.9	162.6	59.7	7	9	148.2	62.4	6.4	9.2	141.8	63.9	6.1	9.6	135.4	65.2	5.8	10.3
9.9	45	51.4	57.4	123.3	3.4	47.2	60.4	113.4	3.1	43.1	63.2	103.4	3	41.2	64.6	99	3.1	39.4	66	94.5	3.3
	7.2	180.6	57.4	7.8	10.3	166.2	60.4	7.2	9.2	151.6	63.2	6.5	9	145	64.6	6.2	9.4	138.5	66	6	9.9
	48	54.7	59.2	131.3	4	50.3	62.4	120.8	3.3	45.9	65.3	110.2	3	44	66.9	105.5	3	42	68.4	100.8	3.1
	8.9	192.4	59.2	8.3	11.9	177	62.4	7.6	9.9	161.5	65.3	7	9	154.6	66.9	6.7	9	147.7	68.4	6.4	9.2
	42	54.4	59	130.7	9.4	50.2	62	120.5	8.1	46	64.7	110.3	6.8	44	66.1	105.7	6.2	42.1	67.5	101	5.7
	5.6	191.5	59	8.2	28.2	176.6	62	7.6	24.1	161.7	64.7	7	20.3	154.9	66.1	6.7	18.7	148.1	67.5	6.4	17.1
	44	56.8	60.3	136.2	10.2	52.4	63.4	125.7	8.7	47.9	66.2	114.9	7.4	45.8	67.7	110	6.8	43.8	69.1	105.1	6.2
5060	6.7	199.6	60.3	8.6	30.5	184.2	63.4	7.9	26.1	168.4	66.2	7.3	22	161.2	67.7	6.9	20.2	154	69.1	6.6	18.4
10.2	45	58	61	139.2	10.7	53.5	64.2	128.4	9.1	48.9	67.1	117.4	7.7	46.8	68.6	112.4	7	44.7	70	107.3	6.4
	7.2	204.1	61	8.8	31.8	188.2	64.2	8.1	27.2	172.1	67.1	7.4	22.9	164.7	68.6	7.1	21	157.3	70	6.8	19.2
	48	61.6	63	147.7	11.9	56.8	66.4	136.4	10.2	52	69.5	124.8	8.6	49.8	71	119.5	7.9	47.6	72.5	114.2	7.3
	8.9	216.5	63	9.3	35.7	199.9	66.4	8.6	30.6	182.9	69.5	7.9	25.8	175.1	71	7.5	23.7	167.3	72.5	7.2	21.7
	42	63.6	67.1	152.7	3	58.7	71	140.9	2.5	53.6	74.4	128.7	1.9	51.3	76.1	123.2	1.7	49	77.8	117.7	1.5
	5.6	223.8	67.1	9.6	9	206.4	71	8.9	7.4	188.6	74.4	8.1	5.8	180.6	76.1	7.8	5.1	172.5	77.8	7.4	4.4
	44	66.2	68.4	159	3.3	61.1	72.3	146.6	2.7	55.8	75.9	134	2.2	53.5	77.7	128.3	1.9	51.1	79.4	122.5	1.7
5065	6.7	232.9	68.4	10	9.8	214.9	72.3	9.3	8.2	196.4	75.9	8.5	6.5	188	77.7	8.1	5.8	179.6	79.4	7.7	5
10.6	45	67.6	69	162.2	3.4	62.3	73	149.6	2.9	56.9	76.6	136.7	2.3	54.6	78.5	130.9	2	52.1	80.2	125.1	1.8
	7.2	237.6	69	10.2	10.3	219.2	73	9.4	8.6	200.3	76.6	8.6	6.9	191.9	78.5	8.3	6.1	183.3	80.2	7.9	5.3
	48	71.7	70.9	172.1	3.9	66.2	75.1	158.8	3.3	60.5	78.9	145.3	2.7	58	80.8	139.2	2.4	55.4	82.7	133.1	2.1
	8.9	252.2	70.9	10.9	11.7	232.8	75.1	10	9.8	213	78.9	9.2	8	204	80.8	8.8	7.2	195	82.7	8.4	6.4
	42	66.7	70.5	160.1	3.3	61.5	74.7	147.6	2.8	56.2	78.4	134.8	2.2	53.7	80.2	129	2	51.3	82	123.1	1.7
	5.6	234.7	70.5	10.1	10	216.3	74.7	9.3	8.3	197.5	78.4	8.5	6.6	189	80.2	8.1	5.9	180.4	82	7.8	5.1
	44	69.5	71.7	166.7	3.7	64	76	153.7	3.1	58.5	79.8	140.4	2.5	56	81.8	134.4	2.2	53.5	83.7	128.4	1.9
5070	6.7	244.3	71.7	10.5	10.9	225.3	76	9.7	9.1	205.8	79.8	8.9	7.4	197	81.8	8.5	6.6	188.2	83.7	8.1	5.8
10.7	45	70.9	72.3	170.1	3.8	65.4	76.7	156.9	3.2	59.7	80.6	143.3	2.6	57.2	82.6	137.2	2.3	54.6	84.5	131.1	2.1
	7.2	249.3	72.3	10.7	11.4	229.9	76.7	9.9	9.6	210	80.6	9	7.7	201.1	82.6	8.7	6.9	192.1	84.5	8.3	6.1
	48	75.3	74.2	180.7	4.3	69.4	78.8	166.7	3.6	63.5	82.9	152.4	3	60.8	85	145.9	2.7	58.1	87	139.5	2.4
	8.9	264.8	74.2	11.4	12.9	244.3	78.8	10.5	10.9	223.3	82.9	9.6	9	213.9	85	9.2	8.1	204.4	87	8.8	7.2
	42	72.6	80.3	174.2	4	66.8	84.6	160.2	3.4	60.8	88.5	146	2.7	58.2	90.5	139.7	2.4	55.6	92.5	133.4	2.2
	5.6	255.2	80.3	11	12	234.8	84.6	10.1	10	214	88.5	9.2	8.1	204.8	90.5	8.8	7.3	195.5	92.5	8.4	6.4
	44	75.5	81.8	181.1	4.3	69.4	86.3	166.7	3.6	63.3	90.3	152	3	60.6	92.4	145.4	2.7	57.9	94.5	138.9	2.4
5075	6.7	265.5	81.8	11.4	13	244.3	86.3	10.5	10.9	222.7	90.3	9.6	8.9	213.1	92.4	9.2	8	203.6	94.5	8.8	7.2
10.2	45	77	82.6	184.7	4.5	70.8	87.1	170	3.8	64.6	91.2	155	3.1	61.8	93.4	148.4	2.8	59.1	95.5	141.8	2.5
	7.2	270.7	82.6	11.7	13.5	249.2	87.1	10.7	11.4	227.2	91.2	9.8	9.3	217.5	93.4	9.4	8.4	207.7	95.5	8.9	7.5
	48	81.6	84.9	196	5.1	75.2	89.7	180.4	4.3	68.6	94	164.6	3.6	65.7	96.3	157.7	3.2	62.8	98.5	150.7	2.9
	8.9	287.2	84.9	12.4	15.1	264.4	89.7	11.4	12.8	241.3	94	10.4	10.6	231	96.3	9.9	9.7	220.8	98.5	9.5	8.7
	42	75.9	80.6	182.2	6.3	70.2	84.8	168.4	5.4	64.3	88.7	154.4	4.5	61.6	90.7	147.8	4.2	58.8	92.6	141.2	3.8
	5.6	267	80.6	11.5	18.8	246.8	84.8	10.6	16.1	226.3	88.7	9.7	13.6	216.7	90.7	9.3	12.5	207	92.6	8.9	11.4
	44	78.4	81.9	188	6.7	72.4	86.4	173.9	5.7	66.4	90.4	159.4	4.8	63.6	92.4	152.6	4.4	60.7	94.4	145.7	4.1
5080	6.7	275.6	81.9	11.9	20	254.8	86.4	11	17.2	233.6	90.4	10.1	14.5	223.6	92.4	9.6	13.3	213.5	94.4	9.2	12.1
10.4	45	79.6	82.6	191	6.9	73.6	87.1	176.6	5.9	67.5	91.2	161.9	5	64.6	93.3	155	4.6	61.7	95.2	148.1	4.2
	7.2	279.9	82.6	12.1	20.6	258.8	87.1	11.1	17.7	237.3	91.2	10.2	14.9	227.2	93.3	9.8	13.7	217	95.2	9.3	12.5
	48	83.2	84.7	199.6	7.5	77	89.4	184.8	6.5	70.7	93.6	169.7	5.5	67.7	95.8	162.6	5	64.8	97.8	155.5	4.6
	8.9	292.5	84.7	12.6	22.5	270.8	89.4	11.7	19.3	248.7	93.6	10.7	16.4	238.3	95.8	10.3	15	227.8	97.8	9.8	13.8
	42	83.2	86.7	199.7	7.5	76.9	91.8	184.6	6.5	70.5	96.3	169.2	5.4	67.5	98.6	162	5	64.5	100.8	154.8	4.6
	5.6	292.6	86.7	12.6	22.5	270.5	91.8	11.6	19.3	248	96.3	10.7	16.3	237.5	98.6	10.2	14.9	226.9	100.8	9.8	13.7
	44	86	88.1	206.3	8	79.5	93.2	190.7	6.9	72.8	97.9	174.8	5.8	69.8	100.3	167.4	5.3	66.6	102.5	160	4.9
5085	6.7	302.3	88.1	13	24	279.5	93.2	12	20.6	256.2	97.9	11	17.3	245.3	100.3	10.6	15.9	234.4	102.5	10.1	14.6
10.7	45	87.4	88.7	209.7	8.3	80.8	94	193.9	7.1	74.1	98.7	177.7	6	70.9	101.1	170.2	5.5	67.8	103.4	162.6	5
	7.2	307.3	88.7	13.2	24.8	284.1	94	12.2	21.2	260.5	98.7	11.2	17.9	249.4	101.1	10.7	16.5	238.3	103.4	10.3	15
	48	91.5	90.7	219.6	9.1	84.7	96.1	203.2	7.8	77.7	101.1	186.5	6.6	74.5	103.6	178.7	6.1	71.2	106	170.9	5.5
	8.9	321.9	90.7	13.9	27.1	297.9	96.1	12.8	23.3	273.4	101.1	11.8	19.7	261.9	103.6	11.3	18.1	250.4	106	10.8	16.6

Notes : **Table 3**

1). For legend, see page 2.

2). Capacity ratings are based on 10 ºF (5.5 ºC) range and 0.0001 ft².hºF/Btu (0.018m².ºC/kW) fouling factor.

* Power input mentioned in this page should not be used for cable or fuse/breaker selection. MCA and MFA values given in the electrical data pages (25-29) shall be referred for the same.

SKM Air Cooled Packaged Chillers
APCX Series - R134a

CAPACITY RATINGS - 50 Hz

Model APCX	LCWT	Condenser Entering Air Temperature °F (°C)																			
		95°F (35°C)				105°F (40.6°C)				115°F (46.1°C)				120°F (48.9°C)				125°F (51.7°C)			
		CCap	PI*	WFR	WPD	CCap	PI*	WFR	WPD	CCap	PI*	WFR	WPD	CCap	PI*	WFR	WPD	CCap	PI*	WFR	WPD
	°F	TR	kW	USgpm	ft.wg	TR	kW	USgpm	ft.wg	TR	kW	USgpm	ft.wg	TR	kW	USgpm	ft.wg	TR	kW	USgpm	ft.wg
EER	°C	kW	kW	l/s	ft.wg	kW	kW	l/s	ft.wg	kW	kW	l/s	ft.wg	kW	kW	l/s	ft.wg	kW	kW	l/s	ft.wg
5090	42	86.3	90.4	207	8.1	79.7	95.8	191.3	6.9	73	100.6	175.3	5.8	69.9	103	167.9	5.4	66.8	105.3	160.4	4.9
10.6	5.6	303.4	90.4	13.1	24.2	280.4	95.8	12.1	20.7	256.9	100.6	11.1	17.4	246	103	10.6	16	235	105.3	10.1	14.6
	44	89.1	91.7	213.9	8.6	82.4	97.2	197.7	7.4	75.5	102.2	181.2	6.2	72.3	104.7	173.5	5.7	69.1	107.1	165.8	5.2
	6.7	313.5	91.7	13.5	25.7	289.8	97.2	12.5	22.1	265.5	102.2	11.4	18.6	254.3	104.7	10.9	17.1	243	107.1	10.5	15.6
	45	90.6	92.4	217.5	8.9	83.8	98	201	7.6	76.8	103	184.2	6.4	73.5	105.5	176.4	5.9	70.2	107.9	168.6	5.4
	7.2	318.7	92.4	13.7	26.6	294.6	98	12.7	22.8	270	103	11.6	19.2	258.6	105.5	11.1	17.7	247.1	107.9	10.6	16.2
	48	95	94.3	228	9.8	87.9	100.2	210.9	8.4	80.6	105.4	193.5	7.1	77.2	108	185.4	6.5	73.8	110.6	177.2	6
	8.9	334.1	94.3	14.4	29.1	309.1	100.2	13.3	25	283.6	105.4	12.2	21.2	271.7	108	11.7	19.5	259.7	110.6	11.2	17.8
5095	42	89.3	94.2	214.2	8.6	82.5	99.8	197.9	7.4	75.5	104.9	181.3	6.2	72.3	107.4	173.5	5.7	69.1	109.9	165.8	5.2
10.6	5.6	314	94.2	13.5	25.8	290.1	99.8	12.5	22.1	265.6	104.9	11.4	18.6	254.3	107.4	10.9	17.1	242.9	109.9	10.5	15.6
	44	92.3	95.5	221.4	9.2	85.2	101.3	204.6	7.9	78.1	106.5	187.4	6.6	74.8	109.1	179.4	6.1	71.4	111.6	171.4	5.6
	6.7	324.5	95.5	14	27.5	299.8	101.3	12.9	23.6	274.6	106.5	11.8	19.9	263	109.1	11.3	18.3	251.2	111.6	10.8	16.7
	45	93.8	96.2	225.1	9.5	86.7	102	208	8.2	79.4	107.3	190.6	6.9	76	110	182.5	6.3	72.7	112.5	174.4	5.8
	7.2	329.9	96.2	14.2	28.4	304.9	102	13.1	24.4	279.3	107.3	12	20.5	267.5	110	11.5	18.9	255.6	112.5	11	17.3
	48	98.4	98.1	236.1	10.4	91	104.2	218.4	9	83.4	109.8	200.3	7.6	79.9	112.6	191.9	7	76.4	115.2	183.4	6.4
	8.9	346	98.1	14.9	31.2	320	104.2	13.8	26.8	293.5	109.8	12.6	22.6	281.2	112.6	12.1	20.8	268.8	115.2	11.6	19.1
5100	42	95.5	104.1	229.2	9.9	88.1	110	211.5	8.4	80.6	115.3	193.5	7.1	77.2	118.1	185.2	6.5	73.7	120.7	176.8	5.9
10.3	5.6	336	104.1	14.5	29.5	309.9	110	13.3	25.2	283.5	115.3	12.2	21.2	271.4	118.1	11.7	19.4	259.2	120.7	11.2	17.7
	44	98.6	105.7	236.7	10.5	91	111.7	218.4	9	83.3	117.2	199.8	7.5	79.7	120	191.3	6.9	76.2	122.7	182.8	6.3
	6.7	346.9	105.7	14.9	31.4	320.1	111.7	13.8	26.8	292.9	117.2	12.6	22.5	280.4	120	12.1	20.7	267.8	122.7	11.5	18.9
	45	100.3	106.5	240.6	10.8	92.5	112.6	222	9.3	84.7	118.2	203.2	7.8	81.1	121	194.5	7.2	77.4	123.8	185.9	6.5
	7.2	352.6	106.5	15.2	32.4	325.4	112.6	14	27.7	297.8	118.2	12.8	23.3	285.1	121	12.3	21.4	272.4	123.8	11.7	19.6
	48	105.1	108.8	252.3	11.9	97.1	115.2	233	10.2	88.9	121.1	213.4	8.6	85.2	124	204.4	7.9	81.4	126.9	195.4	7.2
	8.9	369.8	108.8	15.9	35.5	341.5	115.2	14.7	30.4	312.8	121.1	13.5	25.6	299.6	124	12.9	23.6	286.3	126.9	12.3	21.6
5105	42	101.5	114.1	243.6	11.1	93.5	120.2	224.4	9.5	85.5	125.8	205.1	7.9	81.8	128.7	196.3	7.3	78.1	131.5	187.4	6.7
10.1	5.6	356.9	114.1	15.4	33.2	328.9	120.2	14.2	28.3	300.6	125.8	12.9	23.7	287.6	128.7	12.4	21.8	274.7	131.5	11.8	19.9
	44	104.7	115.9	251.3	11.8	96.5	122.1	231.6	10.1	88.2	127.9	211.7	8.4	84.4	130.9	202.6	7.7	80.7	133.8	193.6	7.1
	6.7	368.3	115.9	15.9	35.2	339.4	122.1	14.6	30.1	310.3	127.9	13.4	25.2	297	130.9	12.8	23.2	283.7	133.8	12.2	21.2
	45	106.4	116.8	255.4	12.2	98.1	123.2	235.4	10.4	89.7	129	215.2	8.7	85.8	132	206	8	82	135	196.8	7.3
	7.2	374.2	116.8	16.1	36.4	344.9	123.2	14.8	31	315.3	129	13.6	26	301.9	132	13	23.9	288.4	135	12.4	21.9
	48	111.6	119.6	267.7	13.3	102.9	126.3	246.9	11.4	94.1	132.4	225.9	9.6	90.2	135.6	216.4	8.8	86.2	138.6	206.8	8.1
	8.9	392.4	119.6	16.9	39.9	361.9	126.3	15.6	34.1	331.1	132.4	14.3	28.6	317.1	135.6	13.7	26.3	303.1	138.6	13	24.1
5110	42	109.8	115.1	263.5	14.5	101.5	121.1	243.6	16	93.1	126.6	223.3	17.1	89.1	129.4	213.7	17.5	85	132.1	204.1	17.8
10.4	5.6	386.2	115.1	16.6	43.3	357.1	121.1	15.4	47.7	327.3	126.6	14.1	51.2	313.2	129.4	13.5	52.5	299.1	132.1	12.9	53.3
	44	113	116.8	271.1	13.9	104.5	123	250.8	15.5	95.9	128.8	230.2	16.8	91.8	131.7	220.4	17.3	87.7	134.4	210.4	17.7
	6.7	397.3	116.8	17.1	41.5	367.6	123	15.8	46.2	337.4	128.8	14.5	50.2	322.9	131.7	13.9	51.7	308.4	134.4	13.3	52.8
	45	114.4	117.5	274.6	13.6	105.9	123.9	254.1	15.2	97.2	129.7	233.3	16.6	93.1	132.7	223.4	17.1	88.9	135.4	213.4	17.6
	7.2	402.4	117.5	17.3	40.7	372.4	123.9	16	45.5	342	129.7	14.7	49.7	327.4	132.7	14.1	51.2	312.8	135.4	13.5	52.5
	48	118	119.4	283.1	12.9	109.3	126.1	262.4	14.6	100.6	132.2	241.4	16.1	96.4	135.1	231.3	16.7	92.2	138	221.2	17.2
	8.9	414.9	119.4	17.9	38.5	384.6	126.1	16.6	43.6	353.8	132.2	15.2	48.2	339	135.1	14.6	50	324.1	138	14	51.5
5120	42	115.6	121.8	277.4	13.4	106.9	128.3	256.5	15	98	134.3	235.1	16.5	93.8	137.3	225.1	17.1	89.6	140.2	215	17.5
10.4	5.6	406.6	121.8	17.5	39.9	375.9	128.3	16.2	45	344.6	134.3	14.8	49.3	329.8	137.3	14.2	51	315	140.2	13.6	52.3
	44	119	123.7	285.5	12.7	110.1	130.5	264.2	14.4	101	136.7	242.5	16	96.7	139.7	232.1	16.7	92.4	142.7	221.7	17.2
	6.7	418.5	123.7	18	37.9	387.2	130.5	16.7	43.2	355.3	136.7	15.3	48	340.2	139.7	14.6	49.9	324.9	142.7	14	51.5
	45	120.5	124.6	289.2	12.4	111.6	131.5	267.7	14.2	102.4	137.7	245.8	15.8	98.1	140.8	235.4	16.5	93.7	143.8	224.9	17.1
	7.2	423.9	124.6	18.2	37	392.4	131.5	16.9	42.3	360.2	137.7	15.5	47.3	344.9	140.8	14.8	49.3	329.5	143.8	14.2	51
	48	124.3	126.8	298.4	11.6	115.3	133.9	276.6	13.4	106	140.4	254.5	15.2	101.6	143.6	243.9	15.9	97.2	146.7	233.3	16.6
	8.9	437.4	126.8	18.8	34.6	405.4	133.9	17.5	40.1	373	140.4	16.1	45.4	357.5	143.6	15.4	47.7	341.9	146.7	14.7	49.7
5125	42	122	129.2	292.8	12.1	112.7	136.3	270.6	13.9	103.3	142.8	247.8	15.7	98.9	146	237.3	16.4	94.4	149.2	226.6	17
10.5	5.6	429.1	129.2	18.5	36.1	396.5	136.3	17.1	41.6	363.2	142.8	15.6	46.9	347.7	146	15	49	332.1	149.2	14.3	50.8
	44	125.7	131.1	301.7	11.3	116.3	138.5	279.1	13.2	106.7	145.3	256	15.1	102.1	148.6	245.1	15.9	97.6	151.9	234.1	16.6
	6.7	442.2	131.1	19	33.8	409.1	138.5	17.6	39.5	375.2	145.3	16.2	45.1	359.2	148.6	15.5	47.4	343.1	151.9	14.8	49.5
	45	127.4	132	305.8	11	117.9	139.5	283	12.9	108.2	146.4	259.7	14.8	103.6	149.8	248.7	15.6	99	153	237.6	16.4
	7.2	448.1	132	19.3	32.8	414.7	139.5	17.9	38.5	380.6	146.4	16.4	44.2	364.4	149.8	15.7	46.7	348.1	153	15	48.9
	48	131.7	134.2	316	10.2	122	142	292.9	12.1	112.2	149.2	269.3	14	107.5	152.7	258	14.9	102.8	156.1	246.7	15.8
	8.9	463.1	134.2	19.9	30.4	429.2	142	18.5	36	394.7	149.2	17	41.9	378.1	152.7	16.3	44.6	361.5	156.1	15.6	47.1
5130	42	123.8	132.2	297.2	8.4	114.4	139.6	274.6	6.8	104.9	146.4	251.7	5.2	100.4	149.7	241	4.5	95.9	153	230.2	3.8
10.4	5.6	435.5	132.2	18.7	25	402.5	139.6	17.3	20.3	368.9	146.4	15.9	15.7	353.1	149.7	15.2	13.6	337.3	153	14.5	11.4
	44	128.3	134.5	307.9	9.1	118.5	142.1	284.5	7.5	108.6	149	260.6	5.8	104	152.5	249.5	5.1	99.3	155.9	238.3	4.4
	6.7	451.2	134.5	19.4	27.2	416.9	142.1	17.9	22.3	382	149	16.4	17.5	365.7	152.5	15.7	15.2	349.3	155.9	15	13
	45	130.7	135.7	313.7	9.5	120.8	143.5	289.8	7.8	110.6	150.5	265.5	6.2	105.9	154	254.2	5.4	101.2	157.4	242.8	4.7
	7.2	459.7	135.7	19.8	28.5	424.8	143.5	18.3	23.5	389.1	150.5	16.8	18.5	372.5	154	16	16.2	355.9	157.4	15.3	13.9
	48	139.3	140	334.4	11	128.7	148.2	309	9.2	118	155.5	283.1	7.4	113	159.2	271.3	6.6	108.1	162.7	259.4	5.8
	8.9	490	140	21.1	32.9	452.8	148.2	19.5	27.5	414.9	155.5	17.9	22.1	397.6	159.2	17.1	19.6	380.2	162.7	16.4	17.2
5135	42	131.1	138.4	314.7	9.6	121.2	146.6	290.9	7.9	111.1	153.9	266.5	6.2	106.3	157.6	255.2	5.5	101.6	161.1	243.8	4.7
10.6	5.6	461.2	138.4	19.9	28.7	426.3	146.6	18.4	23.7	390.6	153.9	16.8	18.7	374	157.6	16.1	16.4	357.2	161.1	15.4	14.1
	44	135.9	140.6	326.1	10.4	125.6	149	301.3	8.7	115	156.5	276.1	6.9	110.1	160.3	264.3	6.1	105.2	164	252.6	5.3
	6.7	477.9	140.6	20.6	31.1	441.6	149	19	25.9	404.6	156.5	17.4	20.6	387.4	160.3	16.7	18.2	370.1	164	15.9	15.8
	45	138.5	141.7	332.3	10.9	127.9	150.2	307	9.1	117.2	157.9	281.3	7.3	112.2	161.8	269.3	6.4	107.2	165.5	257.3	5.6
	7.2	487	141.7	21	32.5	449.9	150.2	19.4	27.1	412.2	157.9	17.7	21.7	394.7	161.8	17	19.2	377.1	165.5	16.2	16.8
	48	147.6	145.8	354.3	12.5	136.4	154.7	327.3	10.5	124.9	162.7	299.7	8.5	119.6	166.8	287.1	7.7	114.4	170.7	274.5	6.8
	8.9	519.2	145.8	22.4	37.3	479.6	154.7	20.6	31.4	439.2	162.7	18.9	25.5	420.8	166.8	18.1	22.9	402.3	170.7	17.3	20.3
5140	42	134.7	141.6	323.2	10.2	124.4	150.1	298.7	8.5	114	157.8	273.6	6.7	109.2	161.6	262	5.9	104.3	165.3	250.2	5.1
10.7	5.6	473.6	141.6	20.4	30.5	437.7	150.1	18.8	25.3	401	157.8	17.3	20.1	383.9	161.6	16.5	17.7	366.7	165.3	15.8	15.4
	44	139.5	143.7	334.9	11	128.9	152.5	309.4	9.2	118.1	160.4	283.4	7.4	113.1	164.3	271.4	6.6	108.1	168.1	259.3	5.8
	6.7	490.7	143.7	21.1	33	453.5	152.5	19.5	27.6	415.4	160.4	17.9	22.1	397.8	164.3	17.1	19.7	380.1	168.1	16.4	17.2
	45	142.2	144.9	341.2	11.5	131.4	153.7	315.3	9.6	120.3	161.7	288.8	7.8	115.2	165.8	276.6	6.9	110.1	169.6	264.3	6.1
	7.2	500	144.9	21.5	34.4	462	153.7	19.9	28.8	423.2	161.7	18.2	23.2	405.3	165.8	17.4	20.7	387.3	169.6	16.7	18.2
	48	151.6	148.8	363.8	13.2	140	158.1	336	11.1	128.2	166.5	307.6	9.1	122.8	170.7	294.7	8.2	117.4	174.7	281.7	7.3
	8.9	533.1	148.8	23	39.4	492.4	158.1	21.2	33.3	450.8	166.5	19.4	27.2	431.9	170.7	18.6	24.5	412.9	174.7	17.8	21.8

Table 3 continued

Notes :

1). For legend, see page 2.

2). Capacity ratings are based on 10 ºF (5.5 ºC) range and 0.0001 ft².hºF/Btu (0.018m².ºC/kW) fouling factor.

* Power input mentioned in this page should not be used for cable or fuse/breaker selection. MCA and MFA values given in the electrical data pages (25-29) shall be referred for the same.

SKM Air Cooled Packaged Chillers
APCX Series - R134a

CAPACITY RATINGS - 50 Hz

Model APCX	LCWT	Condenser Entering Air Temperature °F (°C)																			
		95°F (35°C)				105°F (40.6°C)				115°F (46.1°C)				120°F (48.9°C)				125°F (51.7°C)			
		CCap	PI*	WFR	WPD	CCap	PI*	WFR	WPD	CCap	PI*	WFR	WPD	CCap	PI*	WFR	WPD	CCap	PI*	WFR	WPD
	°F	TR	kW	USgpm	ft.wg	TR	kW	USgpm	ft.wg	TR	kW	USgpm	ft.wg	TR	kW	USgpm	ft.wg	TR	kW	USgpm	ft.wg
EER	°C	kW	kW	l/s	ft.wg	kW	kW	l/s	ft.wg	kW	kW	l/s	ft.wg	kW	kW	l/s	ft.wg	kW	kW	l/s	ft.wg
	42	141	151.6	338.4	11.3	130.2	160.4	312.5	9.4	119.2	168.3	286.1	7.6	114.1	172.3	273.9	6.7	109	176.2	261.6	5.9
	5.6	496	151.6	21.4	33.8	457.9	160.4	19.7	28.2	419.3	168.3	18	22.7	401.3	172.3	17.3	20.2	383.3	176.2	16.5	17.7
	44	146	154	350.4	12.2	134.8	163	323.4	10.2	123.4	171.1	296.1	8.3	118.1	175.3	283.5	7.4	112.9	179.3	270.8	6.5
5145	6.7	513.5	154	22.1	36.4	474	163	20.4	30.6	433.9	171.1	18.7	24.8	415.5	175.3	17.9	22.1	396.9	179.3	17.1	19.5
10.5	45	148.7	155.3	356.9	12.7	137.3	164.4	329.4	10.7	125.6	172.6	301.5	8.7	120.3	176.8	288.7	7.8	114.9	180.9	275.9	6.9
	7.2	523	155.3	22.5	37.8	482.8	164.4	20.8	31.8	441.9	172.6	19	25.9	423.1	176.8	18.2	23.2	404.3	180.9	17.4	20.6
	48	158.3	159.6	379.9	14.4	146	169.2	350.5	12.2	133.6	177.8	320.7	10	128	182.3	307.2	9.1	122.3	186.5	293.6	8.1
	8.9	556.7	159.6	24	42.9	513.7	169.2	22.1	36.4	469.9	177.8	20.2	30	450.1	182.3	19.4	27.1	430.3	186.5	18.5	24.2
	42	147.2	161.6	353.3	12.4	135.8	170.6	325.9	10.4	124.2	178.9	298.2	8.4	118.9	183	285.4	7.5	113.6	187.1	272.6	6.7
	5.6	517.7	161.6	22.3	37	477.6	170.6	20.6	31.1	437	178.9	18.8	25.2	418.2	183	18	22.5	399.5	187.1	17.2	19.9
	44	152.3	164.2	365.4	13.3	140.4	173.5	337.1	11.2	128.5	181.9	308.3	9.1	123	186.2	295.2	8.2	117.5	190.4	282	7.3
5150	6.7	535.5	164.2	23.1	39.7	494	173.5	21.3	33.5	451.9	181.9	19.5	27.3	432.6	186.2	18.6	24.6	413.3	190.4	17.8	21.8
10.3	45	155	165.6	372	13.8	143	175	343.1	11.6	130.8	183.6	313.9	9.5	125.2	187.9	300.5	8.6	119.6	192.2	287.1	7.7
	7.2	545.2	165.6	23.5	41.2	502.8	175	21.6	34.8	460	183.6	19.8	28.5	440.4	187.9	19	25.7	420.8	192.2	18.1	22.9
	48	164.7	170.5	395.4	15.5	151.9	180.3	364.5	13.2	138.9	189.2	333.3	10.9	133	193.8	319.2	9.9	127.1	198.3	305.1	8.9
	8.9	579.4	170.5	24.9	46.4	534.2	180.3	23	39.5	488.4	189.2	21	32.7	467.8	193.8	20.1	29.7	447.1	198.3	19.2	26.7
	42	153.2	171.6	367.6	13.5	141.2	180.9	338.9	11.3	129.1	189.4	309.9	9.3	123.6	193.8	296.6	8.3	118	198	283.3	7.4
	5.6	538.8	171.6	23.2	40.2	496.7	180.9	21.4	33.9	454.2	189.4	19.6	27.7	434.7	193.8	18.7	24.9	415.1	198	17.9	22.1
	44	158.3	174.5	380	14.4	145.9	184	350.3	12.2	133.4	192.7	320.2	10	127.7	197.2	306.5	9	122	201.6	292.8	8.1
5155	6.7	556.9	174.5	24	43	513.3	184	22.1	36.4	469.3	192.7	20.2	29.9	449.2	197.2	19.3	27	429.2	201.6	18.5	24.1
10.1	45	161.1	176	386.7	14.9	148.5	185.6	356.4	12.6	135.8	194.5	325.8	10.4	130	199.1	311.9	9.4	124.2	203.5	298	8.4
	7.2	566.7	176	24.4	44.5	522.3	185.6	22.5	37.7	477.5	194.5	20.6	31.1	457.2	199.1	19.7	28.1	436.8	203.5	18.8	25.2
	48	171	181.4	410.4	16.7	157.5	191.4	378.1	14.2	144	200.6	345.5	11.8	137.9	205.4	330.9	10.8	131.8	210.1	316.2	9.7
	8.9	601.4	181.4	25.9	49.8	554.1	191.4	23.9	42.5	506.3	200.6	21.8	35.3	484.9	205.4	20.9	32.2	463.5	210.1	20	29
	42	156.3	167.4	375.1	21.1	144.2	176.4	346.1	19.2	131.9	184.4	316.7	18.3	126.3	188.6	303.2	18	120.7	192.6	289.6	17.9
	5.6	549.7	167.4	23.7	63	507.2	176.4	21.8	57.5	464.1	184.4	20	54.6	444.3	188.6	19.1	53.9	424.4	192.6	18.3	53.6
	44	162.1	170.6	389.1	22.3	149.6	179.8	359	19.9	136.7	188.1	328.2	18.6	130.9	192.4	314.1	18.2	125	196.5	300	18
5160	6.7	570.3	170.6	24.5	66.8	526.1	179.8	22.6	59.6	481	188.1	20.7	55.5	460.3	192.4	19.8	54.5	439.6	196.5	18.9	53.8
10.3	45	165.2	172.2	396.5	23.1	152.4	181.6	365.8	20.4	139.3	190	334.3	18.8	133.3	194.3	320	18.3	127.3	198.5	305.6	18.1
	7.2	581.1	172.2	25	69.1	536	181.6	23.1	60.9	490	190	21.1	56.1	469	194.3	20.2	54.8	447.8	198.5	19.3	54
	48	175.7	177.8	421.8	26.5	162.2	187.7	389.2	22.3	148.3	196.5	355.9	19.8	142.1	201	340.9	19	135.8	205.4	325.9	18.5
	8.9	618.1	177.8	26.6	79.1	570.3	187.7	24.6	66.8	521.6	196.5	22.5	59.1	499.6	201	21.5	56.9	477.6	205.4	20.6	55.3
	42	162.1	174.8	389.1	22.3	149.5	184.3	358.9	19.9	136.7	192.9	328.2	18.6	130.9	197.3	314.1	18.2	125	201.5	300	18
	5.6	570.2	174.8	24.5	66.8	526	184.3	22.6	59.6	480.9	192.9	20.7	55.5	460.4	197.3	19.8	54.5	439.7	201.5	18.9	53.8
	44	168.2	177.9	403.6	24	155	187.7	372	20.8	141.7	196.5	340.2	19	135.7	201.1	325.6	18.5	129.6	205.4	310.9	18.2
5165	6.7	591.5	177.9	25.5	71.6	545.2	187.7	23.5	62.3	498.5	196.5	21.5	56.8	477.2	201.1	20.5	55.3	455.7	205.4	19.6	54.3
10.3	45	171.4	179.5	411.3	24.9	158	189.5	379.2	21.4	144.4	198.4	346.5	19.3	138.2	203	331.7	18.7	132	207.4	316.8	18.3
	7.2	602.7	179.5	25.9	74.6	555.8	189.5	23.9	64	507.8	198.4	21.9	57.6	486.1	203	20.9	55.8	464.2	207.4	20	54.6
	48	182.3	185	437.6	29.1	168.2	195.5	403.6	24	153.7	204.9	368.8	20.6	147.2	209.7	353.2	19.6	140.6	214.3	337.5	18.9
	8.9	641.3	185	27.6	87.1	591.4	195.5	25.5	71.6	540.5	204.9	23.3	61.6	517.6	209.7	22.3	58.6	494.6	214.3	21.3	56.4
	42	169	180.8	405.6	24.2	155.9	191.1	374.1	21	142.5	200.3	341.9	19.1	136.4	204.9	327.3	18.5	130.2	209.4	312.6	18.2
	5.6	594.4	180.8	25.6	72.4	548.2	191.1	23.6	62.7	501.1	200.3	21.6	57	479.6	204.9	20.6	55.4	458.1	209.4	19.7	54.4
	44	175.3	183.8	420.8	26.3	161.7	194.4	388	22.2	147.7	203.8	354.5	19.7	141.4	208.6	339.3	19	135	213.3	324.1	18.4
5175	6.7	616.6	183.8	26.5	78.7	568.6	194.4	24.5	66.4	519.5	203.8	22.4	58.8	497.3	208.6	21.4	56.7	475	213.3	20.4	55.1
10.4	45	178.7	185.4	428.8	27.6	164.7	196.1	395.3	23	150.5	205.7	361.1	20.1	144.1	210.6	345.7	19.2	137.6	215.3	330.2	18.6
	7.2	628.3	185.4	27.1	82.5	579.3	196.1	24.9	68.7	529.2	205.7	22.8	60	506.7	210.6	21.8	57.5	483.9	215.3	20.8	55.7
	48	190.2	190.6	456.4	33	175.3	201.9	420.8	26.3	160.2	211.9	384.4	21.9	153.4	217.1	368.1	20.5	146.6	222.1	351.7	19.5
	8.9	668.8	190.6	28.8	98.6	616.7	201.9	26.5	78.7	563.3	211.9	24.3	65.4	539.5	217.1	23.2	61.4	515.5	222.1	22.2	58.4
	42	175.6	187.1	421.4	26.4	161.9	198	388.5	22.3	147.9	207.8	354.9	19.7	141.5	212.7	339.7	19	135.2	217.5	324.4	18.5
	5.6	617.5	187.1	26.6	78.9	569.4	198	24.5	66.6	520.2	207.8	22.4	58.9	497.8	212.7	21.4	56.7	475.4	217.5	20.5	55.2
	44	182.1	190	437.1	29.1	167.9	201.2	403	23.9	153.4	211.3	368.1	20.5	146.8	216.4	352.4	19.6	140.2	221.3	336.5	18.8
5180	6.7	640.6	190	27.6	86.9	590.6	201.2	25.4	71.4	539.4	211.3	23.2	61.4	516.4	216.4	22.2	58.5	493.2	221.3	21.2	56.3
10.5	45	185.6	191.5	445.4	30.6	171.1	202.9	410.6	24.9	156.3	213.1	375	21.1	149.6	218.3	359	19.9	142.9	223.3	342.9	19.1
	7.2	652.8	191.5	28.1	91.6	601.8	202.9	25.9	74.3	549.6	213.1	23.7	63	526.1	218.3	22.7	59.6	502.6	223.3	21.6	57.1
	48	197.6	196.5	474.2	37.3	182.1	208.5	437.1	29.1	166.3	219.2	399.1	23.4	159.3	224.7	382.3	21.7	152.2	230	365.3	20.3
	8.9	695	196.5	29.9	111.5	640.6	208.5	27.6	86.9	584.9	219.2	25.2	70	560.2	224.7	24.1	64.8	535.3	230	23	60.8
	42	187.8	199.7	450.7	26.6	173.2	211.3	415.7	21	158.2	221.6	379.6	17.3	151.4	226.9	363.4	16.2	144.6	231.9	347	15.4
	5.6	660.6	199.7	28.4	79.6	609.1	211.3	26.2	62.8	556.4	221.6	24	51.7	532.5	226.9	22.9	48.4	508.6	231.9	21.9	45.9
	44	195	203	467.9	30.2	180.1	215.1	432.3	23.4	165	226	395.9	18.8	158	231.6	379.1	17.3	150.9	236.9	362.2	16.1
5190	6.7	685.7	203	29.5	90.4	633.5	215.1	27.3	70	580.2	226	25	56.1	555.6	231.6	23.9	51.6	530.9	236.9	22.9	48.2
10.6	45	198	204.4	475.2	32	183	216.7	439.2	24.5	167.7	227.8	402.5	19.4	160.6	233.4	385.4	17.8	153.5	238.8	368.4	16.5
	7.2	696.5	204.4	30	95.5	643.7	216.7	27.7	73.4	589.8	227.8	25.4	58.1	564.9	233.4	24.3	53.2	539.8	238.8	23.2	49.3
	48	207.1	208.5	497.1	37.8	191.6	221.3	459.8	28.5	175.7	232.9	421.7	21.8	168.3	238.8	404	19.6	160.9	244.4	386.3	17.9
	8.9	728.6	208.5	31.4	113.1	673.8	221.3	29	85.1	618	232.9	26.6	65.3	592.1	238.8	25.5	58.6	566.1	244.4	24.4	53.4
	42	193.9	209.7	465.3	29.7	178.6	221.4	428.7	22.8	162.9	231.9	391.1	18.3	155.9	237.4	374.2	16.9	148.9	242.6	357.4	15.9
	5.6	681.9	209.7	29.4	88.6	628.2	221.4	27	68.3	573.1	231.9	24.7	54.7	548.5	237.4	23.6	50.5	523.8	242.6	22.5	47.4
	44	201.4	213.4	483.4	34	185.9	225.7	446.3	25.8	170.1	236.9	408.3	20.1	162.9	242.6	391	18.3	155.6	248.1	373.6	16.9
5200	6.7	708.5	213.4	30.5	101.7	654	225.7	28.2	77.1	598.4	236.9	25.8	60.1	573	242.6	24.7	54.6	547.4	248.1	23.6	50.4
10.5	45	204.6	214.9	491	36.1	188.9	227.5	453.4	27.2	173	238.8	415.2	21	165.7	244.6	397.6	18.9	158.3	250.3	379.9	17.3
	7.2	719.6	214.9	31	107.8	664.5	227.5	28.6	81.2	608.4	238.8	26.2	62.6	582.6	244.6	25.1	56.6	556.8	250.3	24	51.8
	48	214	219.4	513.6	43	197.8	232.5	474.6	31.8	181.3	244.4	435	23.9	173.6	250.5	416.8	21.2	166	256.3	398.4	19
	8.9	752.6	219.4	32.4	128.4	695.5	232.5	29.9	95.1	637.6	244.4	27.4	71.3	610.8	250.5	26.3	63.3	583.9	256.3	25.1	56.8
	42	199.8	219.6	479.4	33	183.8	231.5	441.2	24.9	167.5	242.1	402	19.4	160.3	247.8	384.7	17.7	153	253.2	367.3	16.4
	5.6	702.6	219.6	30.2	98.6	646.6	231.5	27.8	74.4	589.1	242.1	25.4	58	563.7	247.8	24.3	53	538.3	253.2	23.2	49.1
	44	207.7	223.8	498.5	38.2	191.6	236.3	459.8	28.5	175.2	247.7	420.4	21.7	167.7	253.6	402.5	19.4	160.2	259.3	384.5	17.7
5205	6.7	730.6	223.8	31.5	114.3	673.9	236.3	29	85.1	616.1	247.7	26.5	64.7	589.8	253.6	25.4	58.1	563.5	259.3	24.3	52.9
10.3	45	211	225.5	506.4	40.6	194.7	238.2	467.3	30.1	178.1	249.9	427.5	22.7	170.6	255.9	409.4	20.2	163	261.7	391.2	18.3
	7.2	742.1	225.5	31.9	121.5	684.8	238.2	29.5	89.9	626.5	249.9	27	67.8	599.9	255.9	25.8	60.5	573.3	261.7	24.7	54.7
	48	220.6	230.4	529.6	48.6	203.8	243.7	489.1	35.5	186.7	255.9	448	26.1	178.8	262.2	429.1	22.9	170.9	268.3	410.3	20.3
	8.9	776.1	230.4	33.4	145.4	716.7	243.7	30.9	106.2	656.6	255.9	28.3	78.1	628.9	262.2	27.1	68.5	601.2	268.3	25.9	60.8
	42	205.4	229.5	493	36.6	188.9	241.6	453.3	27.1	171.9	252.3	412.4	20.6	164.4	258.1	394.6	18.6	157	263.7	376.7	17.1
	5.6	722.5	229.5	31.1	109.5	664.2	241.6	28.6	81.1	604.4	252.3	26	61.6	578.3	258.1	24.9	55.7	552.1	263.7	23.8	51.1
	44	213.8	234.2	513.2	42.8	197.1	246.9	473	31.4	180	258.5	432.1	23.4	172.3	264.6	413.6	20.8	164.6	270.5	395.1	18.7
5210	6.7	752.1	234.2	32.4	128.1	693.2	246.9	29.8	93.9	633.2	258.5	27.3	69.9	606.1	264.6	26.1	62	579.1	270.5	24.9	55.8
10.2	45	217.2	236	521.3	45.6	200.3	249	480.7	33.3	183.1	260.9	439.5	24.6	175.3	267.1	420.8	21.7	167.5	273.1	402.1	19.4
	7.2	764	236	32.9	136.4	704.5	249	30.3	99.6	644.1	260.9	27.7	73.5	616.7	267.1	26.5	64.9	589.3	273.1	25.4	58
	48	227.1	241.4	545.1	54.8	209.6	254.9	503.1	39.6	191.9	267.4	460.7	28.6	183.8	273.9	441.2	24.9	175.7	280.2	421.8	21.8
	8.9	798.9	241.4	34.4	163.9	737.4	254.9	31.7	118.4	675.1	267.4	29.1	85.6	646.6	273.9	27.8	74.4	618.1	280.2	26.6	65.3

Notes :

Table 3 ends

1). For legend, see page 2.

2). Capacity ratings are based on 10 ºF (5.5 ºC) range and 0.0001 ft².hºF/Btu (0.018m².ºC/kW) fouling factor.

* Power input mentioned in this page should not be used for cable or fuse/breaker selection. MCA and MFA values given in the electrical data pages (25-29) shall be referred for the same.

CAPACITY RATINGS - 60 Hz

Model APCX	LCWT	Condenser Entering Air Temperature °F (°C)																			
		95°F (35°C)				105°F (40.6°C)				115°F (46.1°C)				120°F (48.9°C)				125°F (51.7°C)			
		CCap	PI*	WFR	WPD	CCap	PI*	WFR	WPD	CCap	PI*	WFR	WPD	CCap	PI*	WFR	WPD	CCap	PI*	WFR	WPD
	°F	TR	kW	USgpm	ft.wg	TR	kW	USgpm	ft.wg	TR	kW	USgpm	ft.wg	TR	kW	USgpm	ft.wg	TR	kW	USgpm	ft.wg
EER	°C	kW	kW	l/s	ft.wg	kW	kW	l/s	ft.wg	kW	kW	l/s	ft.wg	kW	kW	l/s	ft.wg	kW	kW	l/s	ft.wg
6035	42	34.8	38.5	83.5	5.5	32	40.2	76.8	4.7	29.2	41.7	70	3.8	27.9	42.5	66.9	3.4	26.6	43.2	63.8	3
9.6	5.6	122.4	38.5	5.3	16.5	112.6	40.2	4.8	13.9	102.6	41.7	4.4	11.3	98.1	42.5	4.2	10.1	93.5	43.2	4	8.8
	44	36.2	39.2	87	6	33.3	41	80	5.1	30.4	42.6	73	4.2	29.1	43.4	69.8	3.8	27.7	44.1	66.5	3.3
	6.7	127.5	39.2	5.5	17.9	117.3	41	5	15.2	106.9	42.6	4.6	12.5	102.2	43.4	4.4	11.2	97.5	44.1	4.2	10
	45	37	39.5	88.7	6.2	34	41.4	81.6	5.3	31	43	74.5	4.4	29.7	43.8	71.2	3.9	28.3	44.6	67.9	3.5
	7.2	130	39.5	5.6	18.6	119.7	41.4	5.2	15.8	109.1	43	4.7	13	104.4	43.8	4.5	11.8	99.6	44.6	4.3	10.5
	48	39.1	40.4	93.9	7	36	42.4	86.5	5.9	32.9	44.2	78.9	4.9	31.4	45.1	75.5	4.5	30	46	72	4.1
	8.9	137.7	40.4	5.9	20.9	126.7	42.4	5.5	17.7	115.6	44.2	5	14.7	110.6	45.1	4.8	13.4	105.6	46	4.5	12.1
6045	42	40.8	46.5	98	3.8	37.6	48.7	90.4	5	34.4	50.7	82.6	8	33	51.7	79.2	10	31.5	52.7	75.7	12.5
9.6	5.6	143.6	46.5	6.2	11.4	132.4	48.7	5.7	15	121.1	50.7	5.2	24	116	51.7	5	30	110.9	52.7	4.8	37.4
	44	42.6	47.5	102.2	3.8	39.2	49.8	94.2	4.2	35.9	51.9	86.2	6.4	34.4	53	82.5	8.1	32.9	54	78.9	10.2
	6.7	149.7	47.5	6.4	11.2	138	49.8	5.9	12.6	126.3	51.9	5.4	19.1	121	53	5.2	24.1	115.7	54	5	30.4
	45	43.5	48.1	104.3	3.9	40.1	50.4	96.2	3.9	36.7	52.5	88	5.7	35.1	53.6	84.3	7.2	33.6	54.7	80.6	9.1
	7.2	152.9	48.1	6.6	11.6	141	50.4	6.1	11.8	128.9	52.5	5.6	17.1	123.5	53.6	5.3	21.5	118.2	54.7	5.1	27.3
	48	46.2	49.7	111	4.8	42.6	52.2	102.3	3.8	39	54.4	93.5	4.3	37.3	55.6	89.6	5.2	35.7	56.7	85.7	6.6
	8.9	162.6	49.7	7	14.4	149.9	52.2	6.5	11.2	137.1	54.4	5.9	12.9	131.4	55.6	5.7	15.6	125.6	56.7	5.4	19.6
6050	42	53.1	57.1	127.4	5.3	49.1	60.5	117.7	4.5	44.9	63.5	107.9	3.9	43	65	103.3	3.6	41.1	66.5	98.6	3.4
10.2	5.6	186.7	57.1	8	15.8	172.5	60.5	7.4	13.5	158.1	63.5	6.8	11.6	151.3	65	6.5	10.9	144.6	66.5	6.2	10.3
	44	54.4	57.7	130.7	5.6	50.3	61.1	120.8	4.7	46.1	64.3	110.7	4	44.2	65.8	106	3.8	42.2	67.3	101.3	3.5
	6.7	191.5	57.7	8.2	16.6	177	61.1	7.6	14.2	162.2	64.3	7	12.1	155.3	65.8	6.7	11.3	148.4	67.3	6.4	10.6
	45	55.2	58	132.4	5.7	51	61.5	122.4	4.9	46.8	64.7	112.2	4.1	44.8	66.3	107.4	3.9	42.8	67.8	102.7	3.6
	7.2	194	58	8.4	17	179.4	61.5	7.7	14.6	164.4	64.7	7.1	12.4	157.5	66.3	6.8	11.5	150.4	67.8	6.5	10.8
	48	57.3	58.9	137.5	6.1	53	62.6	127.2	5.3	48.6	65.9	116.7	4.4	46.6	67.5	111.7	4.1	44.5	69.1	106.8	3.8
	8.9	201.5	58.9	8.7	18.4	186.4	62.6	8	15.7	171	65.9	7.4	13.3	163.8	67.5	7.1	12.3	156.5	69.1	6.7	11.4
6060	42	60.4	69.4	144.9	6.8	55.7	73.1	133.6	5.8	50.9	76.5	122.1	4.8	48.7	78.3	116.8	4.5	46.5	80	111.5	4.1
9.7	5.6	212.4	69.4	9.1	20.4	195.8	73.1	8.4	17.4	179	76.5	7.7	14.5	171.2	78.3	7.4	13.3	163.4	80	7	12.2
	44	61.9	70.2	148.6	7.2	57.1	74	137	6.1	52.2	77.6	125.3	5.1	49.9	79.4	119.9	4.7	47.7	81.1	114.4	4.3
	6.7	217.7	70.2	9.4	21.4	200.8	74	8.6	18.3	183.6	77.6	7.9	15.2	175.6	79.4	7.6	14	167.6	81.1	7.2	12.8
	45	62.7	70.7	150.5	7.3	57.8	74.5	138.8	6.3	52.9	78.1	127	5.2	50.6	79.9	121.5	4.8	48.3	81.7	115.9	4.4
	7.2	220.6	70.7	9.5	21.9	203.5	74.5	8.8	18.7	186.1	78.1	8	15.7	178	79.9	7.7	14.3	169.9	81.7	7.3	13.1
	48	65.1	72	156.3	7.9	60.1	76	144.3	6.8	55	79.7	132	5.7	52.6	81.7	126.3	5.2	50.2	83.5	120.5	4.7
	8.9	229.1	72	9.9	23.5	211.5	76	9.1	20.2	193.5	79.7	8.3	16.9	185.1	81.7	8	15.5	176.6	83.5	7.6	14.1
6065	42	66.4	72.8	159.3	4.1	61.4	76.5	147.3	3.5	56.3	79.9	135.2	3	54	81.6	129.6	2.8	51.7	83.2	124	2.6
9.9	5.6	233.5	72.8	10.1	12.2	215.9	76.5	9.3	10.5	198.1	79.9	8.5	9	189.9	81.6	8.2	8.4	181.7	83.2	7.8	7.8
	44	68	73.7	163.2	4.3	62.9	77.5	150.9	3.7	57.7	81	138.5	3.1	55.3	82.8	132.8	2.9	52.9	84.5	127.1	2.7
	6.7	239.1	73.7	10.3	12.7	221.2	77.5	9.5	11	203	81	8.7	9.4	194.6	82.8	8.4	8.7	186.2	84.5	8	8.1
	45	68.8	74.2	165.1	4.4	63.6	78.1	152.7	3.8	58.4	81.6	140.2	3.2	56	83.3	134.4	3	53.6	85.1	128.6	2.8
	7.2	241.9	74.2	10.4	13	223.8	78.1	9.6	11.2	205.5	81.6	8.8	9.6	197	83.3	8.5	8.9	188.5	85.1	8.1	8.3
	48	71.4	75.7	171.3	4.7	66	79.7	158.4	4	60.6	83.3	145.4	3.4	58.1	85.2	139.4	3.2	55.6	87	133.4	2.9
	8.9	251	75.7	10.8	14	232.1	79.7	10	12	213.1	83.3	9.2	10.2	204.3	85.2	8.8	9.5	195.6	87	8.4	8.8
6075	42	73.3	80.3	175.8	6.5	67.7	84.8	162.5	5.8	62.1	88.9	149	5.1	59.5	91	142.7	4.9	56.8	92.9	136.3	4.7
10	5.6	257.7	80.3	11.1	19.4	238.2	84.8	10.3	17.2	218.4	88.9	9.4	15.4	209.1	91	9	14.7	199.8	92.9	8.6	14
	44	75.5	81.4	181.3	6.8	69.8	86.1	167.6	6	64.1	90.3	153.7	5.4	61.3	92.4	147.2	5.1	58.6	94.4	140.7	4.8
	6.7	265.6	81.4	11.4	20.4	245.6	86.1	10.6	18	225.3	90.3	9.7	16	215.8	92.4	9.3	15.2	206.2	94.4	8.9	14.4
	45	76.7	82	184	7	70.9	86.7	170.2	6.2	65	91	156.1	5.5	62.3	93.1	149.5	5.2	59.6	95.2	142.9	4.9
	7.2	269.7	82	11.6	20.9	249.4	86.7	10.7	18.4	228.8	91	9.8	16.3	219.1	93.1	9.4	15.5	209.5	95.2	9	14.7
	48	80.3	83.7	192.8	7.6	74.3	88.6	178.3	6.6	68.2	93.1	163.6	5.8	65.3	95.3	156.8	5.5	62.4	97.5	149.9	5.2
	8.9	282.6	83.7	12.2	22.7	261.4	88.6	11.3	19.8	239.8	93.1	10.3	17.4	229.7	95.3	9.9	16.4	219.6	97.5	9.5	15.5
6080	42	77.1	84.5	185	7.1	71.2	89.4	170.9	6.2	65.2	93.8	156.5	5.5	62.4	96	149.8	5.2	59.6	98.2	143	4.9
10.1	5.6	271.1	84.5	11.7	21.1	250.4	89.4	10.8	18.6	229.3	93.8	9.9	16.4	219.5	96	9.4	15.5	209.6	98.2	9	14.7
	44	79.5	85.6	190.8	7.4	73.5	90.6	176.3	6.5	67.3	95.2	161.5	5.7	64.4	97.5	154.6	5.4	61.6	99.7	147.7	5.1
	6.7	279.6	85.6	12	22.2	258.4	90.6	11.1	19.5	236.7	95.2	10.2	17.1	226.6	97.5	9.8	16.1	216.5	99.7	9.3	15.2
	45	80.7	86.1	193.7	7.6	74.6	91.2	179	6.7	68.4	95.9	164.1	5.8	65.5	98.2	157.1	5.5	62.5	100.4	150.1	5.2
	7.2	283.9	86.1	12.2	22.8	262.4	91.2	11.3	20	240.5	95.9	10.4	17.5	230.2	98.2	9.9	16.5	219.9	100.4	9.5	15.5
	48	84.6	87.9	203.1	8.3	78.2	93.2	187.7	7.2	71.7	98	172.1	6.3	68.7	100.4	164.8	5.9	65.6	102.7	157.4	5.5
	8.9	297.6	87.9	12.8	24.9	275.1	93.2	11.8	21.6	252.1	98	10.9	18.8	241.5	100.4	10.4	17.6	230.7	102.7	9.9	16.5
6085	42	84.3	96.4	202.2	8.3	77.7	101.7	186.5	7.2	71	106.4	170.5	6.2	67.9	108.9	163.1	5.8	64.9	111.2	155.7	5.4
9.8	5.6	296.4	96.4	12.8	24.7	273.3	101.7	11.8	21.4	249.8	106.4	10.8	18.5	239	108.9	10.3	17.3	228.2	111.2	9.8	16.3
	44	86.9	97.8	208.6	8.7	80.2	103.2	192.4	7.5	73.3	108.2	176	6.5	70.2	110.7	168.4	6.1	67	113.1	160.7	5.7
	6.7	305.6	97.8	13.2	26.1	282	103.2	12.1	22.6	257.9	108.2	11.1	19.4	246.8	110.7	10.6	18.1	235.6	113.1	10.1	17
	45	88.2	98.5	211.7	9	81.4	104	195.4	7.8	74.5	109	178.7	6.7	71.3	111.6	171	6.2	68	114.1	163.3	5.8
	7.2	310.3	98.5	13.4	26.9	286.3	104	12.3	23.2	261.9	109	11.3	19.9	250.6	111.6	10.8	18.6	239.2	114.1	10.3	17.3
	48	92.4	100.6	221.7	9.8	85.2	106.3	204.6	8.4	78	111.6	187.2	7.2	74.6	114.3	179.1	6.7	71.2	116.9	171	6.2
	8.9	324.8	100.6	14	29.3	299.8	106.3	12.9	25.2	274.3	111.6	11.8	21.5	262.5	114.3	11.3	20	250.6	116.9	10.8	18.6
6090	42	89.8	97.8	215.6	2.2	83.1	102.9	199.5	1.6	76.4	107.5	183.3	0.9	73.2	109.9	175.7	0.6	70.1	112.1	168.1	0.3
10	5.6	315.9	97.8	13.6	6.6	292.4	102.9	12.6	4.7	268.6	107.5	11.6	2.7	257.5	109.9	11.1	1.7	246.4	112.1	10.6	0.8
	44	92.5	99.4	222.1	2.5	85.7	104.7	205.7	1.8	78.8	109.5	189.2	1.1	75.6	111.9	181.4	0.8	72.3	114.2	173.6	0.5
	6.7	325.5	99.4	14	7.4	301.4	104.7	13	5.4	277.2	109.5	11.9	3.4	265.8	111.9	11.4	2.4	254.4	114.2	11	1.5
	45	93.9	100.2	225.3	2.6	87	105.5	208.7	1.9	80	110.4	192	1.3	76.7	112.9	184.1	0.9	73.4	115.3	176.2	0.6
	7.2	330.2	100.2	14.2	7.8	305.9	105.5	13.2	5.8	281.4	110.4	12.1	3.7	269.8	112.9	11.6	2.8	258.2	115.3	11.1	1.8
	48	97.9	102.4	234.9	3	90.7	108.1	217.7	2.3	83.5	113.2	200.4	1.6	80.1	115.8	192.2	1.3	76.7	118.3	184	0.9
	8.9	344.2	102.4	14.8	9	319	108.1	13.7	6.9	293.7	113.2	12.6	4.8	281.7	115.8	12.1	3.8	269.7	118.3	11.6	2.8
6100	42	98.8	105.1	237	3.1	91.3	111.1	219.2	2.4	83.8	116.5	201.1	1.6	80.3	119.2	192.6	1.3	76.7	121.9	184.2	0.9
10.3	5.6	347.4	105.1	15	9.3	321.2	111.1	13.8	7.1	294.7	116.5	12.7	4.9	282.3	119.2	12.2	3.8	269.9	121.9	11.6	2.8
	44	102	106.7	244.7	3.4	94.4	112.9	226.5	2.7	86.7	118.5	208	1.9	83.1	121.3	199.3	1.6	79.4	124.1	190.6	1.2
	6.7	358.7	106.7	15.4	10.2	331.9	112.9	14.3	8	304.8	118.5	13.1	5.7	292.1	121.3	12.6	4.6	279.3	124.1	12	3.6
	45	103.5	107.4	248.5	3.6	95.8	113.7	230	2.8	88	119.5	211.3	2	84.4	122.3	202.5	1.7	80.7	125.1	193.6	1.3
	7.2	364.1	107.4	15.7	10.7	337.1	113.7	14.5	8.4	309.6	119.5	13.3	6.1	296.7	122.3	12.8	5	283.8	125.1	12.2	3.9
	48	108.1	109.6	259.6	4	100.2	116.2	240.4	3.2	92.1	122.2	221.1	2.4	88.3	125.2	211.9	2.1	84.5	128.1	202.7	1.7
	8.9	380.4	109.6	16.4	12.1	352.4	116.2	15.2	9.7	324	122.2	13.9	7.3	310.6	125.2	13.4	6.2	297.1	128.1	12.8	5.1

Notes : **Table 4**

1). For legend, see page 2.

2). Capacity ratings are based on 10 ºF (5.5 ºC) range and 0.0001 ft².hºF/Btu (0.018m².ºC/kW) fouling factor.

* Power input mentioned in this page should not be used for cable or fuse/breaker selection. MCA and MFA values given in the electrical data pages (25-29) shall be referred for the same.

SKM Air Cooled Packaged Chillers
APCX Series - R134a

CAPACITY RATINGS - 60 Hz

Model APCX	LCWT	Condenser Entering Air Temperature °F (°C)																			
		95°F (35°C)				105°F (40.6°C)				115°F (46.1°C)				120°F (48.9°C)				125°F (51.7°C)			
		CCap	PI*	WFR	WPD	CCap	PI*	WFR	WPD	CCap	PI*	WFR	WPD	CCap	PI*	WFR	WPD	CCap	PI*	WFR	WPD
	°F	TR	kW	USgpm	ft.wg	TR	kW	USgpm	ft.wg	TR	kW	USgpm	ft.wg	TR	kW	USgpm	ft.wg	TR	kW	USgpm	ft.wg
EER	°C	kW	kW	l/s	ft.wg	kW	kW	l/s	ft.wg	kW	kW	l/s	ft.wg	kW	kW	l/s	ft.wg	kW	kW	l/s	ft.wg
6105 10.3	42	102.4	109.6	245.9	3.5	94.7	115.9	227.2	2.7	86.8	121.7	208.2	1.9	83.1	124.6	199.4	1.6	79.4	127.3	190.5	1.2
	5.6	360.3	109.6	15.5	10.4	333	115.9	14.3	8.1	305.1	121.7	13.1	5.7	292.2	124.6	12.6	4.7	279.2	127.3	12	3.6
	44	105.8	111.2	254	3.8	97.9	117.7	235	3	89.8	123.7	215.6	2.2	86	126.7	206.5	1.8	82.2	129.6	197.4	1.5
	6.7	372.3	111.2	16	11.4	344.4	117.7	14.8	9	315.9	123.7	13.6	6.6	302.6	126.7	13	5.5	289.3	129.6	12.5	4.4
	45	107.5	111.9	258	4	99.4	118.6	238.7	3.2	91.3	124.7	219	2.4	87.4	127.7	209.8	2	83.6	130.6	200.6	1.6
	7.2	378	111.9	16.3	11.9	349.7	118.6	15.1	9.5	321	124.7	13.8	7.1	307.5	127.7	13.2	5.9	294	130.6	12.7	4.8
	48	112.4	114.1	269.7	4.5	104	121.1	249.7	3.6	95.6	127.5	229.4	2.8	91.6	130.6	219.8	2.4	87.6	133.7	210.2	2
	8.9	395.2	114.1	17	13.3	365.9	121.1	15.8	10.9	336.2	127.5	14.5	8.3	322.1	130.6	13.9	7.2	308	133.7	13.3	6
6110 10.3	42	106	114.1	254.4	3.8	97.9	120.8	235	3	89.6	126.9	215.1	2.2	85.8	129.9	205.9	1.8	81.9	132.8	196.7	1.4
	5.6	372.9	114.1	16.1	11.4	344.4	120.8	14.8	9	315.2	126.9	13.6	6.6	301.8	129.9	13	5.5	288.2	132.8	12.4	4.3
	44	109.6	115.7	263.1	4.2	101.3	122.7	243.2	3.4	92.9	129	223	2.5	89	132.1	213.5	2.1	85	135.1	204	1.7
	6.7	385.6	115.7	16.6	12.5	356.5	122.7	15.3	10	326.7	129	14.1	7.5	312.9	132.1	13.5	6.4	298.9	135.1	12.9	5.2
	45	111.3	116.5	267.2	4.4	103	123.5	247.1	3.5	94.4	129.9	226.6	2.7	90.4	133.1	217	2.3	86.4	136.2	207.3	1.9
	7.2	391.6	116.5	16.9	13	362.1	123.5	15.6	10.5	332	129.9	14.3	8	317.9	133.1	13.7	6.8	303.8	136.2	13.1	5.6
	48	116.5	118.7	279.5	4.9	107.8	126.1	258.7	4	98.9	132.8	237.5	3.1	94.8	136.1	227.5	2.7	90.6	139.3	217.4	2.3
	8.9	409.7	118.7	17.6	14.6	379.1	126.1	16.3	12	348	132.8	15	9.3	333.3	136.1	14.4	8.1	318.6	139.3	13.7	6.9
6115 10	42	113.4	126.3	272.1	4.6	104.5	133.3	250.9	3.7	95.5	139.7	229.3	2.8	91.4	143	219.4	2.4	87.3	146.1	209.4	2
	5.6	398.7	126.3	17.2	13.6	367.7	133.3	15.8	11	336	139.7	14.5	8.3	321.5	143	13.8	7.1	306.9	146.1	13.2	5.9
	44	117.3	128.3	281.6	5	108.3	135.6	260	4.1	99.1	142.3	237.9	3.1	94.9	145.7	227.7	2.7	90.6	149	217.4	2.3
	6.7	412.6	128.3	17.8	14.8	381	135.6	16.4	12.1	348.7	142.3	15	9.4	333.7	145.7	14.4	8.1	318.6	149	13.7	6.9
	45	119.1	129.2	285.9	5.2	110	136.6	264.1	4.2	100.7	143.4	241.8	3.3	96.4	146.9	231.4	2.9	92.1	150.2	220.9	2.4
	7.2	419.1	129.2	18	15.4	387	136.6	16.7	12.6	354.3	143.4	15.3	9.9	339.1	146.9	14.6	8.6	323.8	150.2	13.9	7.3
	48	124.7	131.9	299.2	5.7	115.2	139.7	276.6	4.8	105.6	146.8	253.5	3.8	101.1	150.4	242.6	3.3	96.5	153.9	231.7	2.9
	8.9	438.5	131.9	18.9	17.1	405.3	139.7	17.4	14.2	371.5	146.8	16	11.3	355.6	150.4	15.3	10	339.5	153.9	14.6	8.6
6125 9.8	42	120.3	138.5	288.8	5.3	110.8	145.8	265.9	4.3	101.1	152.5	242.6	3.3	96.7	156	232	2.9	92.3	159.4	221.5	2.5
	5.6	423.2	138.5	18.2	15.8	389.7	145.8	16.8	12.9	355.5	152.5	15.3	10	340.1	156	14.6	8.7	324.6	159.4	14	7.4
	44	124.6	140.9	299.1	5.7	114.9	148.5	275.8	4.7	105	155.6	252	3.7	100.5	159.2	241.1	3.3	95.9	162.8	230.1	2.8
	6.7	438.3	140.9	18.9	17.1	404.2	148.5	17.4	14.1	369.4	155.6	15.9	11.1	353.3	159.2	15.2	9.8	337.2	162.8	14.5	8.4
	45	126.6	141.9	303.8	5.9	116.8	149.7	280.2	4.9	106.7	156.9	256.2	3.9	102.1	160.6	245	3.4	97.4	164.3	233.8	3
	7.2	445.2	141.9	19.2	17.7	410.7	149.7	17.7	14.7	375.4	156.9	16.2	11.7	359.1	160.6	15.5	10.3	342.7	164.3	14.8	8.9
	48	132.5	145.2	317.9	6.5	122.3	153.3	293.6	5.5	111.9	160.9	268.6	4.4	107.1	164.8	256.9	3.9	102.2	168.7	245.2	3.4
	8.9	465.9	145.2	20.1	19.5	430.2	153.3	18.5	16.4	393.7	160.9	16.9	13.2	376.6	164.8	16.2	11.8	359.3	168.7	15.5	10.3
6130 9.8	42	125.1	137.3	300.2	8.6	115.6	144.1	277.4	7	106	150.3	254.3	5.4	101.5	153.4	243.6	4.7	97	156.3	232.9	4
	5.6	439.9	137.3	18.9	25.6	406.5	144.1	17.5	20.9	372.7	150.3	16	16.2	357	153.4	15.4	14.1	341.3	156.3	14.7	12
	44	129.5	139.8	310.8	9.3	119.7	146.8	287.2	7.7	109.7	153.2	263.3	6	105.1	156.4	252.2	5.3	100.5	159.5	241.1	4.5
	6.7	455.5	139.8	19.6	27.9	420.8	146.8	18.1	22.9	385.8	153.2	16.6	18	369.6	156.4	15.9	15.8	353.4	159.5	15.2	13.6
	45	131.9	141.1	316.6	9.7	121.9	148.2	292.5	8	111.7	154.7	268.1	6.4	107	158	256.9	5.6	102.3	161.2	245.6	4.8
	7.2	464	141.1	20	29.1	428.7	148.2	18.5	24	392.9	154.7	16.9	19	376.5	158	16.2	16.7	360	161.2	15.5	14.5
	48	140.5	145.6	337.2	11.2	129.8	153.3	311.4	9.4	118.9	160.2	285.4	7.5	113.9	163.8	273.5	6.7	109	167.3	261.6	5.9
	8.9	494.2	145.6	21.3	33.5	456.4	153.3	19.6	28	418.2	160.2	18	22.5	400.8	163.8	17.3	20.1	383.3	167.3	16.5	17.7
6135 9.9	42	131.8	145.1	316.4	9.7	121.9	152.4	292.5	8	111.8	159.1	268.4	6.4	107.2	162.4	257.3	5.6	102.5	165.7	246.1	4.9
	5.6	463.6	145.1	20	29	428.6	152.4	18.5	24	393.3	159.1	16.9	19	377	162.4	16.2	16.8	360.7	165.7	15.5	14.6
	44	136.4	147.7	327.4	10.5	126.1	155.3	302.6	8.7	115.7	162.2	277.6	7	110.9	165.7	266.1	6.2	106.1	169.1	254.6	5.4
	6.7	479.7	147.7	20.7	31.4	443.4	155.3	19.1	26.1	406.8	162.2	17.5	20.9	389.9	165.7	16.8	18.6	373.1	169.1	16.1	16.3
	45	138.9	149.2	333.3	10.9	128.4	156.9	308	9.1	117.7	163.8	282.6	7.3	112.9	167.4	270.9	6.5	108	170.9	259.2	5.7
	7.2	488.5	149.2	21	32.7	451.4	156.9	19.4	27.3	414.1	163.8	17.8	21.9	397	167.4	17.1	19.5	379.8	170.9	16.4	17.2
	48	147.7	154.2	354.5	12.5	136.5	162.3	327.5	10.5	125.1	169.7	300.2	8.6	119.9	173.6	287.8	7.7	114.8	177.3	275.4	6.9
	8.9	519.6	154.2	22.4	37.3	479.9	162.3	20.7	31.4	440	169.7	18.9	25.6	421.8	173.6	18.2	23	403.7	177.3	17.4	20.5
6140 9.9	42	139	153.9	333.5	10.9	128.4	162	308.1	9.1	117.7	169.3	282.4	7.3	112.7	173	270.5	6.5	107.7	176.6	258.6	5.7
	5.6	488.7	153.9	21	32.7	451.5	162	19.4	27.3	413.8	169.3	17.8	21.9	396.4	173	17.1	19.5	378.9	176.6	16.3	17.1
	44	143.8	156.5	345.1	11.8	132.8	164.8	318.7	9.9	121.7	172.4	292	8	116.6	176.2	279.8	7.1	111.4	179.9	267.5	6.3
	6.7	505.7	156.5	21.8	35.2	467.1	164.8	20.1	29.5	428	172.4	18.4	23.9	410	176.2	17.7	21.4	392	179.9	16.9	18.9
	45	146.4	157.9	351.3	12.3	135.2	166.4	324.5	10.3	123.9	174	297.3	8.4	118.7	177.9	284.8	7.5	113.5	181.7	272.3	6.6
	7.2	514.9	157.9	22.2	36.6	475.5	166.4	20.5	30.8	435.6	174	18.8	25	417.4	177.9	18	22.4	399.1	181.7	17.2	19.8
	48	155.7	162.9	373.6	13.9	143.7	171.8	344.9	11.8	131.6	179.8	315.7	9.7	126.1	184	302.5	8.7	120.6	188	289.3	7.8
	8.9	547.5	162.9	23.6	41.5	505.4	171.8	21.8	35.2	462.7	179.8	19.9	28.9	443.4	184	19.1	26.1	424	188	18.3	23.3
6145 9.9	42	142.4	158.3	341.8	11.6	131.5	166.8	315.7	9.7	120.5	174.4	289.1	7.8	115.4	178.3	276.9	7	110.2	182.1	264.6	6.1
	5.6	501	158.3	21.6	34.5	462.6	166.8	19.9	28.9	423.7	174.4	18.2	23.3	405.8	178.3	17.5	20.8	387.8	182.1	16.7	18.3
	44	147.4	161	353.7	12.4	136.1	169.7	326.5	10.4	124.6	177.5	299	8.5	119.3	181.5	286.4	7.6	114	185.4	273.7	6.7
	6.7	518.3	161	22.3	37.1	478.5	169.7	20.6	31.2	438.2	177.5	18.9	25.4	419.7	181.5	18.1	22.7	401.1	185.4	17.3	20.1
	45	150	162.4	360.1	12.9	138.5	171.2	332.4	10.9	126.8	179.2	304.4	8.9	121.5	183.3	291.5	8	116.1	187.2	278.6	7.1
	7.2	527.7	162.4	22.7	38.5	487.2	171.2	21	32.5	446.1	179.2	19.2	26.5	427.2	183.3	18.4	23.8	408.3	187.2	17.6	21.1
	48	159.5	167.3	382.9	14.6	147.2	176.6	353.3	12.4	134.7	184.9	323.2	10.2	129	189.2	309.6	9.2	123.3	193.4	296	8.3
	8.9	561.1	167.3	24.2	43.6	517.7	176.6	22.3	37	473.7	184.9	20.4	30.5	453.8	189.2	19.5	27.6	433.8	193.4	18.7	24.7
6155 10.1	42	150.9	165.6	362.1	13	139.3	174.9	334.2	11	127.4	183.3	305.9	9	122	187.6	292.8	8.1	116.5	191.7	279.7	7.1
	5.6	530.7	165.6	22.8	39	489.8	174.9	21.1	32.9	448.3	183.3	19.3	26.8	429.1	187.6	18.5	24.1	409.9	191.7	17.6	21.3
	44	156.1	168	374.7	14	144.1	177.7	345.7	11.8	131.8	186.3	316.3	9.7	126.2	190.7	302.8	8.8	120.5	194.9	289.3	7.8
	6.7	549.1	168	23.6	41.8	506.7	177.7	21.8	35.4	463.5	186.3	20	29	443.8	190.7	19.1	26.2	424	194.9	18.3	23.3
	45	158.9	169.4	381.5	14.5	146.7	179.1	352	12.3	134.2	187.9	322	10.1	128.5	192.4	308.3	9.1	122.7	196.7	294.5	8.2
	7.2	559	169.4	24.1	43.3	515.8	179.1	22.2	36.8	471.9	187.9	20.3	30.2	451.8	192.4	19.5	27.3	431.6	196.7	18.6	24.4
	48	169	174	405.5	16.3	155.8	184.2	374	13.9	142.4	193.4	341.9	11.6	136.4	198.1	327.4	10.5	130.4	202.6	312.9	9.5
	8.9	594.3	174	25.6	48.7	548.1	184.2	23.6	41.6	501	193.4	21.6	34.5	479.8	198.1	20.7	31.4	458.5	202.6	19.7	28.3
6160 10.3	42	158.9	171.1	381.3	24.4	146.7	181.1	352.2	21.8	134.4	190.3	322.6	20.4	128.7	194.8	308.8	20.1	122.9	199.2	295	19.9
	5.6	558.8	171.1	24.1	72.8	516.1	181.1	22.2	65.3	472.8	190.3	20.4	61.1	452.6	194.8	19.5	60.1	432.3	199.2	18.6	59.5
	44	164	173.4	393.6	25.8	151.4	183.7	363.4	22.7	138.6	193	332.7	20.8	132.7	197.7	318.5	20.3	126.8	202.2	304.3	20
	6.7	576.8	173.4	24.8	77.2	532.6	183.7	22.9	67.8	487.6	193	21	62.2	466.8	197.7	20.1	60.8	445.9	202.2	19.2	59.8
	45	166.6	174.6	399.9	26.7	153.8	185	369.2	23.2	140.8	194.4	337.9	21	134.8	199.1	323.5	20.5	128.8	203.7	309.1	20.1
	7.2	586.1	174.6	25.2	79.9	541	185	23.3	69.2	495.1	194.4	21.3	62.9	474.1	199.1	20.4	61.2	452.9	203.7	19.5	60.1
	48	175.9	178.6	422.1	30.4	162.1	189.4	389.1	25.3	148.1	199	355.6	22.1	141.9	203.9	340.5	21.2	135.6	208.7	325.3	20.5
	8.9	618.5	178.6	26.6	90.8	570.2	189.4	24.5	75.5	521.1	199	22.4	66	499	203.9	21.5	63.3	476.8	208.7	20.5	61.4

Table 4 continued

Notes :

1). For legend, see page 2.

2). Capacity ratings are based on 10 ºF (5.5 ºC) range and 0.0001 ft².hºF/Btu (0.018m².ºC/kW) fouling factor.

* Power input mentioned in this page should not be used for cable or fuse/breaker selection. MCA and MFA values given in the electrical data pages (25-29) shall be referred for the same.

SKM Air Cooled Packaged Chillers
APCX Series - R134a

CAPACITY RATINGS - 60 Hz

Model APCX	LCWT	Condenser Entering Air Temperature °F (°C)																			
		95°F (35°C)				105°F (40.6°C)				115°F (46.1°C)				120°F (48.9°C)				125°F (51.7°C)			
		CCap	PI*	WFR	WPD	CCap	PI*	WFR	WPD	CCap	PI*	WFR	WPD	CCap	PI*	WFR	WPD	CCap	PI*	WFR	WPD
	°F	TR	kW	USgpm	ft.wg	TR	kW	USgpm	ft.wg	TR	kW	USgpm	ft.wg	TR	kW	USgpm	ft.wg	TR	kW	USgpm	ft.wg
EER	°C	kW	kW	l/s	ft.wg	kW	kW	l/s	ft.wg	kW	kW	l/s	ft.wg	kW	kW	l/s	ft.wg	kW	kW	l/s	ft.wg
6170 10.1	42	166.3	183.3	399.2	26.6	153.5	193.7	368.4	23.1	140.5	203.2	337.2	21	134.5	208	322.7	20.4	128.4	212.6	308.2	20.1
	5.6	585	183.3	25.2	79.5	539.9	193.7	23.2	69	494.2	203.2	21.3	62.8	472.9	208	20.4	61.1	451.6	212.6	19.4	60
	44	171.5	185.8	411.6	28.5	158.3	196.4	379.8	24.2	144.8	206.1	347.4	21.6	138.5	211.1	332.5	20.8	132.3	215.9	317.5	20.3
	6.7	603.2	185.8	26	85.3	556.6	196.4	24	72.4	509.1	206.1	21.9	64.4	487.3	211.1	21	62.2	465.3	215.9	20	60.7
	45	174.2	187.1	418.1	29.6	160.7	197.8	385.7	24.9	146.9	207.6	352.6	21.9	140.6	212.6	337.5	21	134.3	217.5	322.3	20.4
	7.2	612.7	187.1	26.4	88.6	565.2	197.8	24.3	74.3	516.8	207.6	22.2	65.4	494.6	212.6	21.3	62.9	472.4	217.5	20.3	61.1
	48	183.4	191.5	440.2	34.2	169	202.6	405.6	27.6	154.3	212.6	370.4	23.3	147.7	217.9	354.5	22	141.1	222.9	338.6	21.1
	8.9	645.1	191.5	27.8	102.2	594.5	202.6	25.6	82.4	542.8	212.6	23.4	69.6	519.6	217.9	22.4	65.8	496.2	222.9	21.4	63
6175 9.9	42	173.5	195.5	416.5	29.4	160.1	206.3	384.2	24.7	146.4	216.1	351.4	21.8	140.1	221.2	336.2	21	133.7	226	320.8	20.4
	5.6	610.4	195.5	26.3	87.8	563	206.3	24.2	73.8	514.9	216.1	22.2	65.1	492.7	221.2	21.2	62.7	470.1	226	20.2	61
	44	178.8	198.2	429.2	31.8	164.9	209.2	395.7	26.1	150.7	219.3	361.7	22.5	144.2	224.5	346	21.5	137.6	229.5	330.3	20.7
	6.7	628.9	198.2	27.1	95	579.9	209.2	25	78.1	530	219.3	22.8	67.3	507.1	224.5	21.8	64.2	484.1	229.5	20.8	61.9
	45	181.5	199.6	435.6	33.2	167.3	210.8	401.6	27	152.9	220.9	366.9	23	146.3	226.2	351.1	21.8	139.6	231.3	335.1	20.9
	7.2	638.4	199.6	27.5	99.1	588.5	210.8	25.3	80.6	537.7	220.9	23.1	68.6	514.5	226.2	22.1	65.1	491.2	231.3	21.1	62.5
	48	190.8	204.4	457.9	38.7	175.7	215.8	421.7	30.3	160.3	226.3	384.7	24.8	153.4	231.8	368.1	23.1	146.4	237.2	351.3	21.8
	8.9	671	204.4	28.9	115.6	617.9	215.8	26.6	90.6	563.8	226.3	24.3	74	539.4	231.8	23.2	68.9	514.9	237.2	22.2	65.1
6185 9.8	42	180.6	207.8	433.4	32.7	166.4	218.9	399.4	26.6	152.1	229.1	365.1	22.8	145.5	234.4	349.2	21.7	138.9	239.5	333.4	20.8
	5.6	635.1	207.8	27.3	97.7	585.4	218.9	25.2	79.6	535	229.1	23	68.2	511.8	234.4	22	64.8	488.5	239.5	21	62.3
	44	185.9	210.7	446.1	35.6	171.3	222.1	411.1	28.4	156.4	232.5	375.5	23.8	149.6	238	359.1	22.3	142.8	243.2	342.8	21.3
	6.7	653.8	210.7	28.1	106.5	602.4	222.1	25.9	85	550.2	232.5	23.7	71	526.3	238	22.7	66.8	502.3	243.2	21.6	63.6
	45	188.6	212.2	452.7	37.3	173.8	223.7	417	29.5	158.6	234.3	380.8	24.3	151.7	239.8	364.2	22.7	144.8	245.1	347.6	21.6
	7.2	663.4	212.2	28.6	111.4	611.1	223.7	26.3	88.1	558	234.3	24	72.7	533.7	239.8	23	67.9	509.3	245.1	21.9	64.4
	48	197.9	217.3	475	43.8	182.2	229.1	437.2	33.5	166.1	240	398.6	26.5	158.8	245.8	381.2	24.4	151.5	251.4	363.7	22.7
	8.9	696.1	217.3	30	131	640.7	229.1	27.6	100.2	584.2	240	25.1	79.3	558.7	245.8	24.1	72.8	533	251.4	22.9	67.8
6190 10	42	184.5	203.1	442.9	38.3	170.3	213.6	408.8	26.7	155.9	223	374.2	19.1	149.4	227.9	358.4	16.8	142.8	232.5	342.7	15.1
	5.6	649.1	203.1	27.9	114.6	599.1	213.6	25.8	79.7	548.4	223	23.6	57.1	525.3	227.9	22.6	50.2	502.2	232.5	21.6	45.2
	44	191.6	207	459.9	46	176.9	217.9	424.6	31.5	162	227.7	388.8	21.8	155.2	232.8	372.5	18.8	148.4	237.7	356.2	16.5
	6.7	674	207	29	137.4	622.2	217.9	26.8	94.1	569.8	227.7	24.5	65.2	545.9	232.8	23.5	56.2	522	237.7	22.5	49.4
	45	195.2	208.9	468.4	50.3	180.2	220.1	432.4	34.3	165	230	396	23.4	158.1	235.2	379.4	20	151.2	240.2	362.8	17.4
	7.2	686.5	208.9	29.6	150.4	633.7	220.1	27.3	102.4	580.3	230	25	70	556	235.2	23.9	59.8	531.7	240.2	22.9	51.9
	48	207.2	215.4	497.2	67.7	191	227	458.5	45.3	174.7	237.4	419.2	29.7	167.4	242.9	401.7	24.8	160.1	248.1	384.2	20.9
	8.9	728.7	215.4	31.4	202.3	671.9	227	28.9	135.3	614.3	237.4	26.4	88.9	588.7	242.9	25.3	74.1	563	248.1	24.2	62.5
6195 10	42	191.7	212.1	460	28.5	176.7	223.3	424.1	22.2	161.4	233.2	387.3	17.9	154.5	238.3	370.8	16.7	147.6	243.3	354.2	15.7
	5.6	674.1	212.1	29	85.2	621.5	223.3	26.8	66.3	567.6	233.2	24.4	53.6	543.4	238.3	23.4	49.8	519.1	243.3	22.3	46.9
	44	199	216	477.5	32.5	183.8	227.7	441.1	24.9	168.3	238.3	403.9	19.6	161.2	243.7	386.9	17.9	154.1	248.9	369.7	16.6
	6.7	699.8	216	30.1	97.2	646.4	227.7	27.8	74.3	591.9	238.3	25.5	58.6	566.9	243.7	24.4	53.5	541.9	248.9	23.3	49.6
	45	202.1	217.6	484.9	34.4	186.7	229.6	448.1	26.1	171.1	240.4	410.5	20.4	163.8	245.9	393.2	18.5	156.6	251.1	375.9	17
	7.2	710.7	217.6	30.6	102.9	656.6	229.6	28.3	78.1	601.6	240.4	25.9	60.9	576.3	245.9	24.8	55.3	550.8	251.1	23.7	50.9
	48	211.2	222.3	506.9	40.8	195.3	234.9	468.7	30.4	179.1	246.2	429.8	23	171.6	252	411.8	20.5	164	257.5	393.7	18.5
	8.9	742.9	222.3	32	122	686.8	234.9	29.6	90.9	629.9	246.2	27.1	68.8	603.5	252	26	61.4	577	257.5	24.8	55.4
6205 10.1	42	199.9	219	479.8	33.1	184.1	231	441.9	25	167.8	241.6	402.8	19.5	160.6	247.1	385.5	17.8	153.4	252.4	368.2	16.5
	5.6	703.1	219	30.3	98.9	647.5	231	27.9	74.7	590.3	241.6	25.4	58.2	565	247.1	24.3	53.2	539.5	252.4	23.2	49.3
	44	208	223	499.2	38.4	192	235.6	460.8	28.7	175.6	247	421.4	21.8	168.1	252.8	403.5	19.6	160.6	258.3	385.5	17.8
	6.7	731.6	223	31.5	114.9	675.2	235.6	29.1	85.7	617.6	247	26.6	65.2	591.4	252.8	25.5	58.5	565	258.3	24.3	53.2
	45	211.3	224.6	507.2	40.9	195.1	237.5	468.3	30.3	178.6	249	428.6	22.8	171	254.9	410.5	20.4	163.4	260.6	392.2	18.4
	7.2	743.3	224.6	32	122.2	686.3	237.5	29.5	90.7	628.2	249	27	68.3	601.5	254.9	25.9	60.9	574.8	260.6	24.7	55
	48	221.1	229.2	530.7	49.1	204.3	242.7	490.4	35.9	187.2	254.9	449.4	26.4	179.3	261	430.4	23.1	171.4	266.9	411.4	20.5
	8.9	777.7	229.2	33.5	146.7	718.7	242.7	30.9	107.3	658.5	254.9	28.4	78.8	630.8	261	27.2	69.1	602.9	266.9	26	61.2
6215 10.2	42	207.7	226.2	498.4	38.2	191	239	458.4	28.2	173.8	250.1	417	21.2	166.2	256	399	19.1	158.7	261.6	380.9	17.4
	5.6	730.4	226.2	31.4	114.1	671.8	239	28.9	84.2	611.2	250.1	26.3	63.4	584.7	256	25.2	57	558.1	261.6	24	52
	44	216.6	230.2	519.8	45.1	199.7	243.7	479.4	33	182.4	255.8	437.9	24.3	174.6	262	419.1	21.5	166.8	267.9	400.3	19.2
	6.7	761.7	230.2	32.8	134.8	702.5	243.7	30.2	98.6	641.7	255.8	27.6	72.7	614.2	262	26.4	64.2	586.7	267.9	25.3	57.4
	45	220.1	231.8	528.3	48.2	203.1	245.6	487.5	35.1	185.7	257.9	445.7	25.7	177.8	264.2	426.7	22.6	169.8	270.2	407.6	20
	7.2	774.3	231.8	33.3	144	714.5	245.6	30.8	105	653.2	257.9	28.1	76.8	625.3	264.2	26.9	67.4	597.3	270.2	25.7	59.9
	48	230.6	236.4	553.4	58.4	213	250.8	511.1	42.2	195	263.8	467.9	30.2	186.7	270.3	448.1	26.1	178.4	276.5	428.2	22.8
	8.9	811	236.4	34.9	174.5	749	250.8	32.2	126	685.7	263.8	29.5	90.4	656.7	270.3	28.3	78.1	627.5	276.5	27	68.1
6220 10.1	42	214.3	237.9	514.4	43.2	196.9	250.8	472.5	31.3	178.7	262	428.8	22.9	170.9	268.1	410.1	20.3	163.1	273.9	391.4	18.3
	5.6	753.8	237.9	32.5	129.3	692.4	250.8	29.8	93.5	628.4	262	27.1	68.4	601.1	268.1	25.9	60.8	573.6	273.9	24.7	54.8
	44	223.9	242.5	537.3	51.7	206.3	256.3	495.1	37.2	188.2	268.6	451.6	26.8	180.1	274.9	432.2	23.4	171.9	281.1	412.6	20.6
	6.7	787.5	242.5	33.9	154.4	725.5	256.3	31.2	111.3	661.8	268.6	28.5	80.1	633.3	274.9	27.3	69.9	604.7	281.1	26	61.7
	45	227.6	244.2	546.3	55.3	209.9	258.3	503.7	39.8	191.6	270.9	459.9	28.5	183.4	277.4	440.2	24.7	175.1	283.7	420.3	21.6
	7.2	800.6	244.2	34.5	165.4	738.2	258.3	31.8	119	674.1	270.9	29	85.2	645.1	277.4	27.8	73.9	616	283.7	26.5	64.7
	48	238.4	249.3	572.3	67.3	220.1	264	528.2	48.1	201.3	277.4	483.1	33.9	192.7	284.2	462.5	29	184	290.7	441.7	25
	8.9	838.7	249.3	36.1	201.2	774.1	264	33.3	143.9	708	277.4	30.5	101.4	677.7	284.2	29.2	86.8	647.3	290.7	27.9	74.7
6230 9.9	42	220.7	249.5	529.7	48.7	202.3	262.5	485.6	34.6	183.1	273.6	439.6	24.6	175.1	279.8	420.3	21.6	167.1	285.8	401	19.3
	5.6	776.2	249.5	33.4	145.5	711.7	262.5	30.6	103.4	644.2	273.6	27.7	73.6	615.9	279.8	26.5	64.7	587.7	285.8	25.3	57.6
	44	231	254.7	554.3	58.8	212.6	268.7	510.2	41.8	193.6	281.2	464.7	29.5	185.2	287.8	444.5	25.5	176.8	294.2	424.3	22.2
	6.7	812.3	254.7	35	175.8	747.6	268.7	32.2	125.1	681	281.2	29.3	88.2	651.5	287.8	28	76.2	621.9	294.2	26.8	66.4
	45	234.9	256.7	563.7	63.1	216.4	271	519.3	44.9	197.3	283.9	473.6	31.6	188.8	290.6	453.1	27.1	180.2	297.1	432.6	23.5
	7.2	826.1	256.7	35.6	188.8	761	271	32.8	134.3	694.1	283.9	29.9	94.3	664.1	290.6	28.6	81	633.9	297.1	27.3	70.1
	48	246.1	262.2	590.6	77.1	227	277.3	544.8	54.7	207.4	291	497.8	38	198.5	298	476.3	32.2	189.5	304.9	454.8	27.4
	8.9	865.6	262.2	37.3	230.4	798.4	277.3	34.4	163.5	729.5	291	31.4	113.6	698.1	298	30.1	96.3	666.5	304.9	28.7	82
6235 9.8	42	226.7	261	544.1	54.4	207.4	274.1	497.9	38	187	284.8	448.9	26.3	178.8	291.1	429.1	22.9	170.5	297.2	409.3	20.2
	5.6	797.4	261	34.3	162.6	729.6	274.1	31.4	113.7	657.9	284.8	28.3	78.6	628.8	291.1	27.1	68.5	599.8	297.2	25.8	60.4
	44	237.8	266.9	570.6	66.5	218.6	281.1	524.6	46.8	198.8	293.8	477.1	32.4	190.1	300.6	456.3	27.7	181.4	307.2	435.4	23.9
	6.7	836.3	266.9	36	198.8	768.8	281.1	33.1	139.9	699.1	293.8	30.1	96.9	668.7	300.6	28.8	82.9	638.1	307.2	27.5	71.5
	45	241.9	269	580.6	71.6	222.6	283.7	534.3	50.4	202.8	296.8	486.7	34.9	194	303.7	465.5	29.7	185.1	310.5	444.3	25.4
	7.2	850.8	269	36.6	214	783	283.7	33.7	150.8	713.2	296.8	30.7	104.3	682.2	303.7	29.4	88.8	651.1	310.5	28	76
	48	253.5	275.1	608.5	87.6	233.7	290.5	560.9	61.8	213.3	304.6	512	42.4	204.1	311.9	489.8	35.7	194.8	319.1	467.4	30.1
	8.9	891.8	275.1	38.4	261.9	821.9	290.5	35.4	184.7	750.3	304.6	32.3	126.8	717.7	311.9	30.9	106.8	685	319.1	29.5	90.1
6240 9.7	42	232.3	272.3	557.6	60.3	212.1	285.3	508.9	41.4	190	295.3	456	27.7	181.5	301.5	435.6	23.9	173	307.6	415.2	21
	5.6	817.2	272.3	35.2	180.3	745.8	285.3	32.1	123.9	668.2	295.3	28.8	82.7	638.4	301.5	27.5	71.6	608.5	307.6	26.2	62.7
	44	244.3	279	586.4	74.7	224.3	293.5	538.4	52.1	203.6	306.1	488.7	35.4	194.7	313.1	467.3	30.1	185.8	319.9	445.9	25.7
	6.7	859.3	279	37	223.3	789	293.5	34	155.6	716.2	306.1	30.8	105.9	684.9	313.1	29.5	90	653.5	319.9	28.1	76.9
	45	248.7	281.4	596.8	80.6	228.6	296.3	548.7	56.4	208	309.6	499.2	38.4	198.9	316.7	477.4	32.5	189.8	323.7	455.5	27.6
	7.2	874.7	281.4	37.7	240.9	804.1	296.3	34.6	168.5	731.5	309.6	31.5	114.8	699.6	316.7	30.1	97.1	667.5	323.7	28.7	82.4
	48	260.8	288	625.9	98.9	240.2	303.8	576.4	69.4	219	318.1	525.6	47.2	209.5	325.8	502.7	39.5	199.9	333.2	479.6	33
	8.9	917.2	288	39.5	295.7	844.7	303.8	36.4	207.5	770.3	318.1	33.2	141.1	736.7	325.8	31.7	118	702.9	333.2	30.3	98.8

Notes :

Table 4 ends

1). For legend, see page 2.

2). Capacity ratings are based on 10 ºF (5.5 ºC) range and 0.0001 ft².hºF/Btu (0.018m².ºC/kW) fouling factor.

* Power input mentioned in this page should not be used for cable or fuse/breaker selection. MCA and MFA values given in the electrical data pages (25-29) shall be referred for the same.

Compressor Starting

All chillers with standard DOL start compressors are shown, do not, generally require part winding start due to the use of multiple compressors allowing smaller electrical load increments. Optional starting method (part winding or star-delta) can be provided if the starting current of the chiller to be reduced further. ICF given in electrical data pages (page-25~page-29) shall be referred for the same.

Cases where two values of ICF (DOL & PWS) are shown in electrical specifications, the unit will be supplied with DOL as standard and PWS as optional. For cases where only one value is shown the unit will be supplied, as standard, either DOL or PWS.

MODELS USING COMPRESSORS	POWER SUPPLY V / Ph / Hz	STANDARD COMPRESSOR STARTING
D35X, D40X D40X + D50X	380-415/3/50 380/3/60	DOL
D50X, D60X	440/3/50 460/3/60	PWS
D35X, D40X, D50X, D60X	220/3/60	PWS

Table 5

Capacity Control Steps

APCX Model		Standard Capacity Steps %	Optional Capacity Steps	
			CRS 1	CRS 2
5030	6035	100 - 50 - 0	100 - 83 - 50 - 33 - 0	100 - 83 - 67 - 50 - 33 - 17 - 0
5040	6045	100 - 50 - 0	100 - 83 - 50 - 33 - 0	100 - 83 - 67 - 50 - 33 - 17 - 0
5045	6050	100 - 50 - 0	100 - 88 - 50 - 33 - 0	100 - 88 - 75 - 50 - 38 - 25 - 0
5050	6060	100 - 50 - 0	100 - 88 - 50 - 33 - 0	100 - 88 - 75 - 50 - 38 - 25 - 0
5060	6065	100 - 67 - 33 - 0	100 - 67 - 33 - 22 - 0	100 - 89 - 67 - 56 - 33 - 22 - 0
5065	6075	100 - 69 - 35 - 0	100 - 69 - 35 - 26 - 0	100 - 90 - 69 - 61 - 35 - 26 - 0
5070	6080	100 - 67 - 33 - 0	100 - 67 - 33 - 25 - 0	100 - 92 - 67 - 58 - 33 - 25 - 0
5075	6085	100 - 69 - 34 - 0	100 - 69 - 34 - 26 - 0	100 - 92 - 69 - 60 - 34 - 26 - 0
5080	6090	100 - 75 - 50 - 25 - 0	100 - 75 - 50 - 42 - 25 - 17 - 0	100 - 92 - 75 - 67 - 50 - 42 - 25 - 17 - 0
5085	6100	100 - 77 - 53 - 27 - 0	100 - 77 - 53 - 46 - 27 - 20 - 0	100 - 92 - 77 - 69 - 53 - 46 - 27 - 20 - 0
5090	6105	100 - 77 - 51 - 26 - 0	100 - 77 - 51 - 45 - 26 - 19 - 0	100 - 92 - 77 - 71 - 51 - 45 - 26 - 19 - 0
5095	6110	100 - 75 - 50 - 25 - 0	100 - 75 - 50 - 44 - 25 - 19 - 0	100 - 94 - 75 - 69 - 50 - 44 - 25 - 19 - 0
5100	6115	100 - 76 - 53 - 26 - 0	100 - 76 - 53 - 46 - 26 - 20 - 0	100 - 94 - 76 - 70 - 53 - 46 - 26 - 20 - 0
5105	6125	100 - 75 - 50 - 25 - 0	100 - 75 - 50 - 44 - 25 - 19 - 0	100 - 94 - 75 - 69 - 50 - 44 - 25 - 19 - 0
5110	6130	100 - 85 - 69 - 52 - 35 - 17 - 0	100 - 85 - 69 - 52 - 35 - 29 - 17 - 12 - 0	Nil
5120	6135	100 - 83 - 67 - 50 - 33 - 17 - 0	100 - 83 - 67 - 50 - 33 - 28 - 17 - 11 - 0	Nil
5125	6140	100 - 84 - 68 - 52 - 36 - 18 - 0	100 - 84 - 68 - 52 - 36 - 32 - 18 - 14 - 0	Nil
5130	6145	100 - 84 - 69 - 53 - 35 - 18 - 0	100 - 84 - 69 - 53 - 35 - 31 - 18 - 13 - 0	Nil
5135	6155	100 - 85 - 68 - 51 - 34 - 17 - 0	100 - 85 - 68 - 51 - 34 - 30 - 17 - 13 - 0	Nil
5140	6160	100 - 83 - 67 - 50 - 33 - 17 - 0	100 - 83 - 67 - 50 - 33 - 29 - 17 - 13 - 0	Nil
5145	6170	100 - 84 - 68 - 52 - 36 - 18 - 0	100 - 84 - 68 - 52 - 36 - 31 - 18 - 13 - 0	Nil
5150	6175	100 - 84 - 69 - 52 - 34 - 17 - 0	100 - 84 - 69 - 52 - 34 - 30 - 17 - 13 - 0	Nil
5155	6185	100 - 83 - 67 - 50 - 33 - 17 - 0	100 - 83 - 67 - 50 - 33 - 29 - 17 - 13 - 0	Nil
5160	6190	100 - 88 - 76 - 64 - 52 - 39 - 26 - 14 - 0	Nil	Nil
5165	6195	100 - 88 - 77 - 65 - 53 - 40 - 27 - 13 - 0	Nil	Nil
5175	6205	100 - 89 - 76 - 64 - 51 - 39 - 26 - 13 - 0	Nil	Nil
5180	6215	100 - 88 - 75 - 63 - 50 - 38 - 25 - 13 - 0	Nil	Nil
5190	6220	100 - 88 - 76 - 63 - 51 - 39 - 26 - 13 - 0	Nil	Nil
5200	6230	100 - 88 - 76 - 64 - 53 - 39 - 26 - 13 - 0	Nil	Nil
5205	6235	100 - 88 - 76 - 64 - 51 - 38 - 26 - 13 - 0	Nil	Nil
5210	6240	100 - 88 - 75 - 63 - 50 - 38 - 25 - 13 - 0	Nil	Nil

Table 6

Capacity Correction & Limits

Evaporator Chiller Limits of Operation

Maximum LCWT : 48°F (8.9°C)
Maximum ECWT : 76°F (24.4°C)*
Minimum LCWT : 40°F (4.5°C)
For Lower LCWT ethylene glycol solution to be used consult SKM.
(*For short periods.)*

Range & Flow Limits

Range limit 8°F - 16°F (4.4°C - 8.9°C) except where limited by water flow rate limits for evaporator. For minimum & maximum water flow rate refer to page 23.

Working & Test Pressures

Evaporator Pressure		Refrigerant	Water
Maximum Working Pressure	psig	239.3	145
	kPa	1650	1000
Test Pressure	psig	334.3	207.4
	kPa	2305	1430

Table 7

Condenser Pressure		Refrigerant
Maximum Working Pressure	psig	300
	kPa	2068
Test Pressure	psig	450
	kPa	3102

Table 8

Cooler Fouling Factors

The units are rated at 0.0001 ft².h.°F/Btu (0.018m².°C/KW) Other than this fouling factor, apply the correction factors to get the effect on cooling capacity and power input.

Fouling Factor		Capacity Multiplier	Power Multiplier
IP	SI		
0.0001 *	0.018	1	1
0.00025	0.044	0.99	1
0.0005	0.088	0.98	0.99
0.001	0.176	0.95	0.98
0.002	0.352	0.90	0.96

Table 9

*Standard fouling factor, as per ARI standard 550/590.

Altitude Correction Factor

The units ratings are based on sea level. Above sea level apply the following correction factors:

Altitude		Capacity Multiplier	Power Multiplier
Feet	Meters		
0	0	1	1
2000	610	0.99	1.01
4000	1219	0.98	1.02
6000	1829	0.97	1.03
8000	2438	0.96	1.04
10000	3048	0.95	1.05

Table 10

Range Correction Factors

Capacity ratings based on 10°F (5.5°C) chilled water range. For other than this range please use correction factor below.

Range		Capacity Multiplier	Power Multiplier
°F	°C		
8	4.4	0.995	0.998
10	5.5	1	1
12	6.7	1.005	1.002
14	7.8	1.01	1.004
16	8.9	1.015	1.006

Table 11

Fin Material Correction Factors

The unit ratings are based on copper tube and aluminium fins condenser. For alternative condenser material the following factors apply :

Condenser Fin Material	Capacity Multiplier	Power Multiplier
Precoated Aluminum	0.995	1.001
Copper	1.01	0.992

Table 12

Selection Procedure

APCX Chillers should be selected with specific Design Considerations, requirements and parameters of the intended application. Care and good engineering should lead to an efficient and cost effective selection. Sample procedures are shown below:

Example 1: (IP System)

Select an Air Cooled Package Chiller giving a capacity of 102.0 TR to cool water from 54 ºF to 44 ºF at 2000 ft. altitude, 0.00075 fouling factor, power supply 415V/3Ph/50Hz and 115 ºF ambient Temperature.

Find compressor power input in kW.

Selection:

Apply the following factors to convert the required capacity to tabulated capacity ratings.

	Capacity Multiplier	Power Multiplier
Range (12 ºF)	1.005	1.002
Altitude	0.99	1.01
Fouling Factor	0.965	0.985

$$\text{Tabulated rated capacity} = \frac{102}{1.005 \times 0.99 \times 0.965}$$

$$= 106.2 \text{ TR}$$

Refer to capacity rating 50Hz under 115 ºF condenser entering air temperature and select a chiller giving a capacity nearest larger to 106.2 at 44 ºF LCWT. Select model ***APCX*** 5130 giving a capacity of 106 TR and PI = 147.2 kW.

Apply correction factors to the selected unit to find actual capacity and P I.

Capacity = 106 x 1.005 x 0.99 x 0.965
= 102 TR

P I = 147.2 x 1.002 x 1.01 x 0.985
= 143.7 kW

Calculation of Water Flow Rate (WFR)

To calculate the water flow rate to be circulated, use the following:

$$\text{WFR (US gpm)} = \frac{\text{C.CAP (TR) x 24}}{\text{Range (ºF)}}$$

$$= \frac{102 \times 24}{12} = 204 \text{ US gpm}$$

Determine the pressure drop from chart on Page 23, using 208.4 gpm, pressure drop reading is 8.5 ft wg.

Example 2: (SI System)

Select an Air Cooled Package Chiller giving a capacity of 390 kW of refrigeration to cool water from 14.5 ºC to 6.7 ºC at 610M altitude, 0.132 fouling factor, power supply 380V/3Ph/60Hz and 40 ºC ambient Temperature.

Find compressor power input in kW.

Selection:

Apply the following factors to convert the required capacity to tabulated capacity ratings.

	Capacity Multiplier	Power Multiplier
Range (7.8 ºC)	1.010	1.004
Altitude	0.99	1.01
Fouling Factor	0.965	0.985

$$\text{Tabulated rated capacity} = \frac{390}{1.01 \times 0.99 \times 0.965}$$

$$= 404.2 \text{ kW}$$

Refer to capacity rating 60Hz under 40 ºC condenser entering air temperature and select a chiller giving a capacity nearest larger to 404.2 at 6.7 ºC LCWT. Select model ***APCX*** 6125 giving a capacity of 407.6 kW and PI = 147.8 kW.

Apply correction factors to the selected unit to find actual capacity and P I.

Capacity = 407.6 x 1.01 x 0.99 x 0.965
= 393.3 kW

P I = 150.0 x 1.004 x 1.01 x 0.985
= 147.6 kW

Calculation of Water Flow Rate (WFR)

To calculate the water flow rate to be circulated, use the following:

$$\text{WFR (L/s)} = \frac{\text{C.CAP (kW) x 0.239}}{\text{Range (ºC)}}$$

$$= \frac{393.3 \times 0.239}{7.8} = 12.05 \text{ L/s.}$$

Determine the pressure drop from chart on Page 23, using 12.1 L/s, pressure drop reading is 4.5 kPa.

For more details refer to other specifications and dimensional drawings for the selected model.

Evaporator Water Pressure Drop

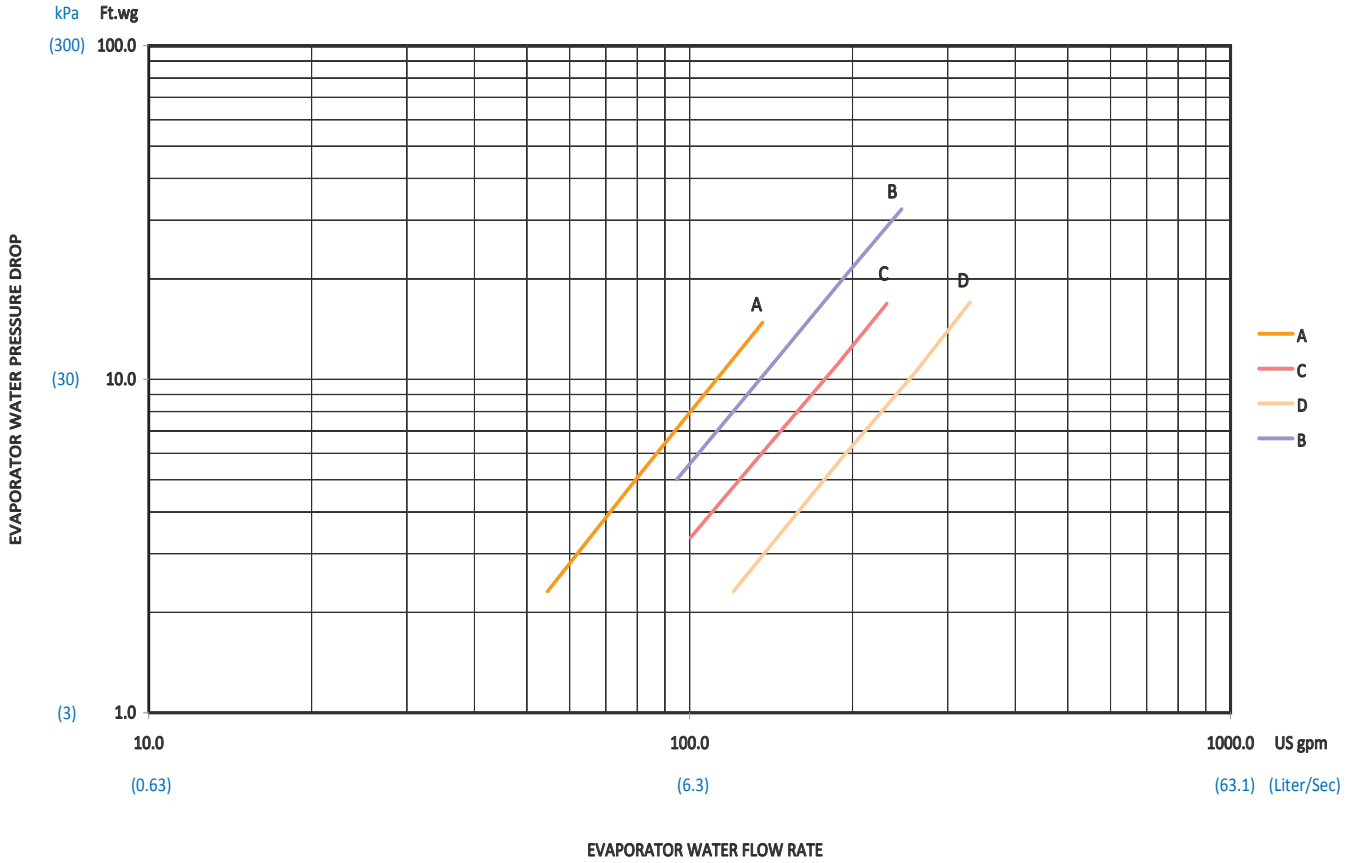

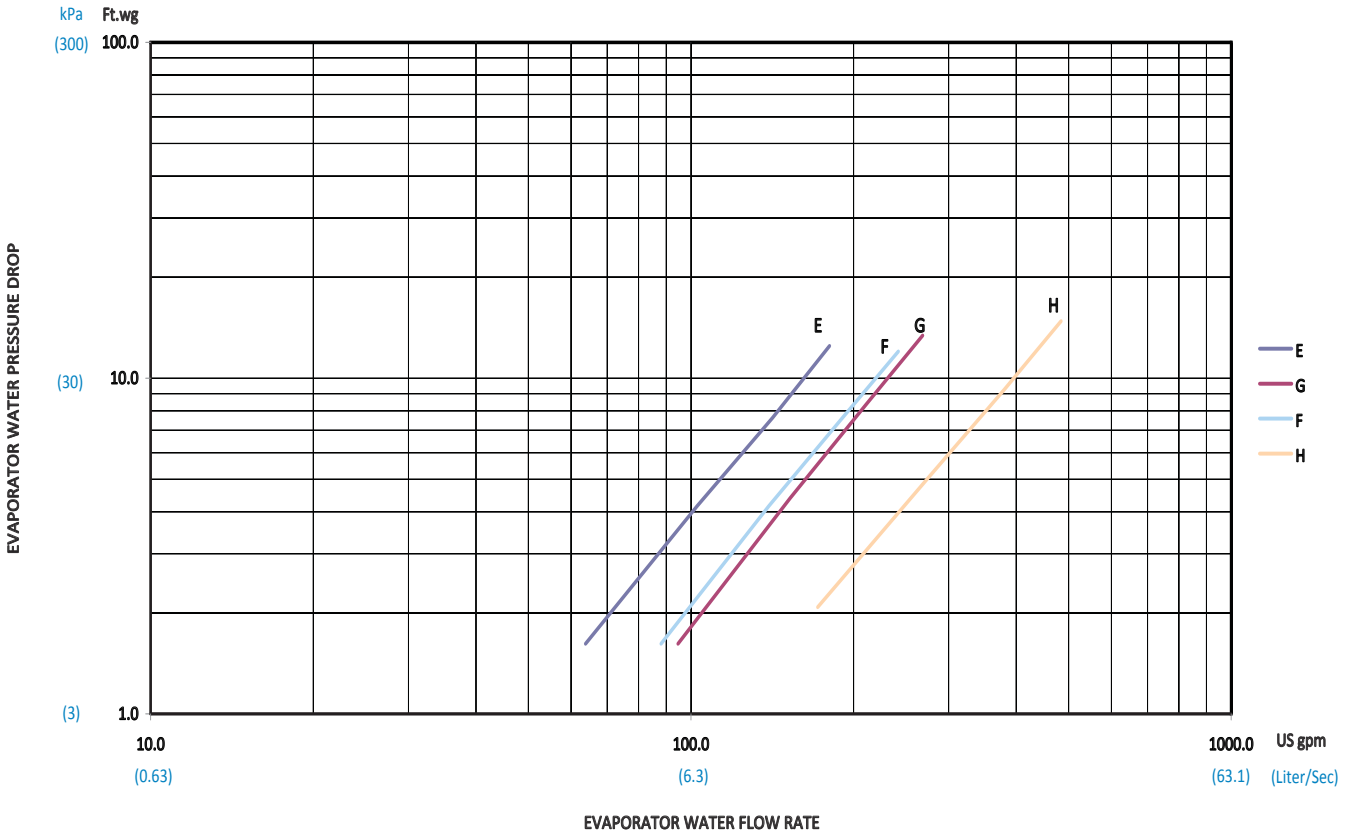

Water Pressure Drop

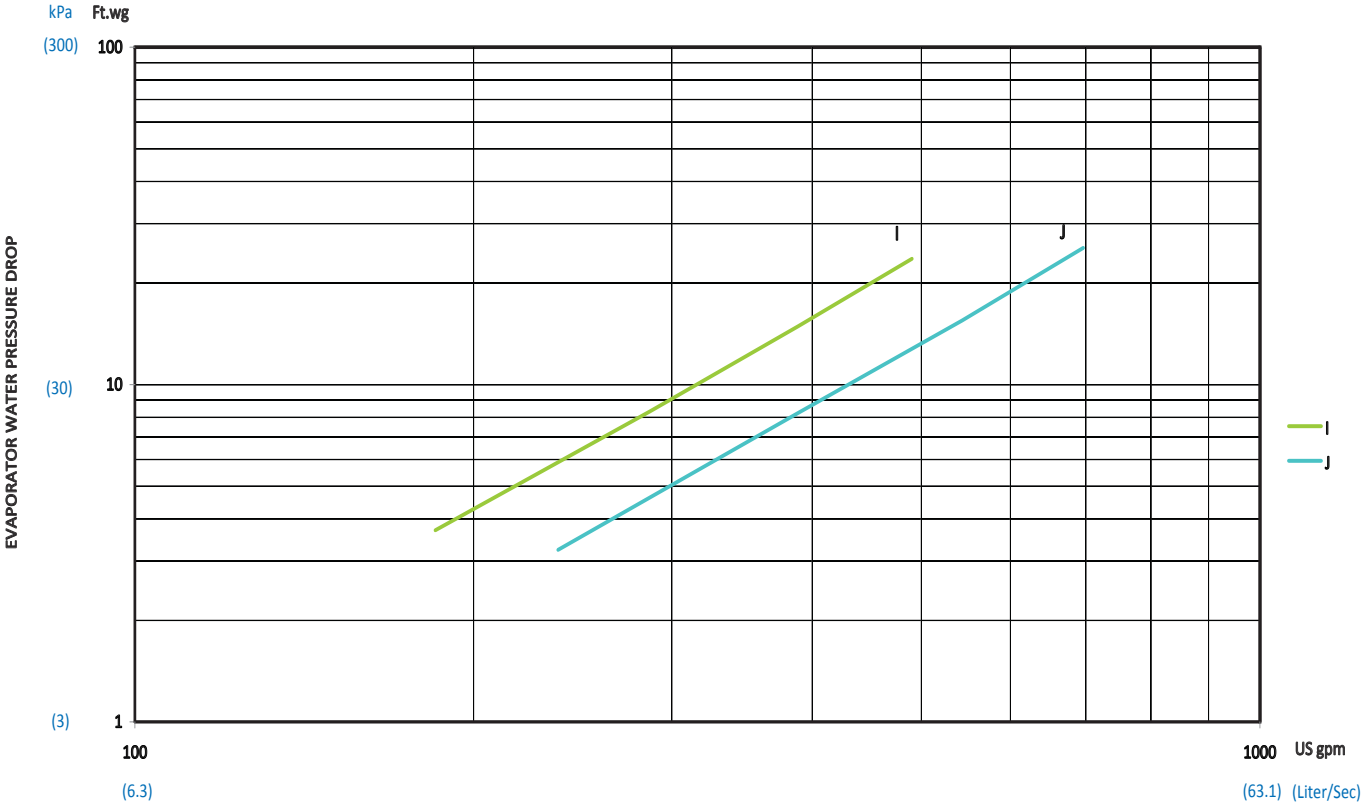

Evaporator	APCX	Water Flow Rate (US gpm / L/s)	
		Minimun	Maximum
A	5030, 6035	54.6 / 3.4	136.4 / 8.61
B	5060	94.7 / 5.97	246.6 / 15.56
C	5040, 6045	78 / 4.92	224.4 / 14.16
	5045, 5050, 6050, 6060	87.5 / 5.52	231.4 / 14.6
D	6065	120.5 / 7.6	330 / 20.82
E	5065, 5070, 5075	85.8 / 5.41	180.5 / 11.3
F	5080, 5085, 5090, 5095, 5100, 5105	94.66 / 5.9	268.57 / 16.9
G	6075, 6080, 6085	85.85 / 5.55	242.15 / 15.27
H	6090, 6100, 6105, 6110, 6115, 6125	171.7 / 10.8	484.3 / 30.5
I	5110, 5120, 5125	184.92 / 11.66	446.45 / 28.16
	5130, 5135, 5140, 5145, 5150, 5155	184.9 / 11.6	490.5 / 30.9
	6130, 6135, 6140, 6145, 6155		
J	5160, 5165, 5175, 5180, 6160, 6170, 6175, 6185	228.9 / 14.4	569 / 35.9
	6190	233.352 / 14.72	637.75 / 40.23
	5190, 5200, 5205, 5210, 6195, 6205, 6215, 6220, 6230, 6235, 6240	237.7 / 14.99	696.5 / 43.94

Table 13

Typical Wiring Diagram

LEGEND			
SS	SELECTOR SWITCH		
CT	CURRENT TRANSFORMER	– – –	FIELD WIRING
CS	CONTROL SWITCH	LWT	LEAVING WATER TEMPERATURE
CR	CONTROL RELAY	EWT	ENTERING WATER TEMPERATURE
CM	COMPRESSOR MOTOR	FDS	FUSED DISCONNECT SWITCH
CFM	CONDENSER FAN MOTOR	WFS	WATER FLOW SWITCH
CF	CONTROL FUSE	S	MANUAL PUMPDOWN SWITCH
CCH	CRANK CASE HEATER	MPCB	MOTOR PROTECTOR CIRQUIT BREAKER
CB	CIRCUIT BREAKER	MP	COMP. MOTOR PROTECTOR
C	CONTACTOR	MCB	MINIATUR CIRQUIT BREAKER
AFT	ANTI FREEZE THERMOSTAT	LP	LOW PRESSURE
LSV	LIQUID LINE SOLENOID VALVE	HP	HIGH PRESSURE

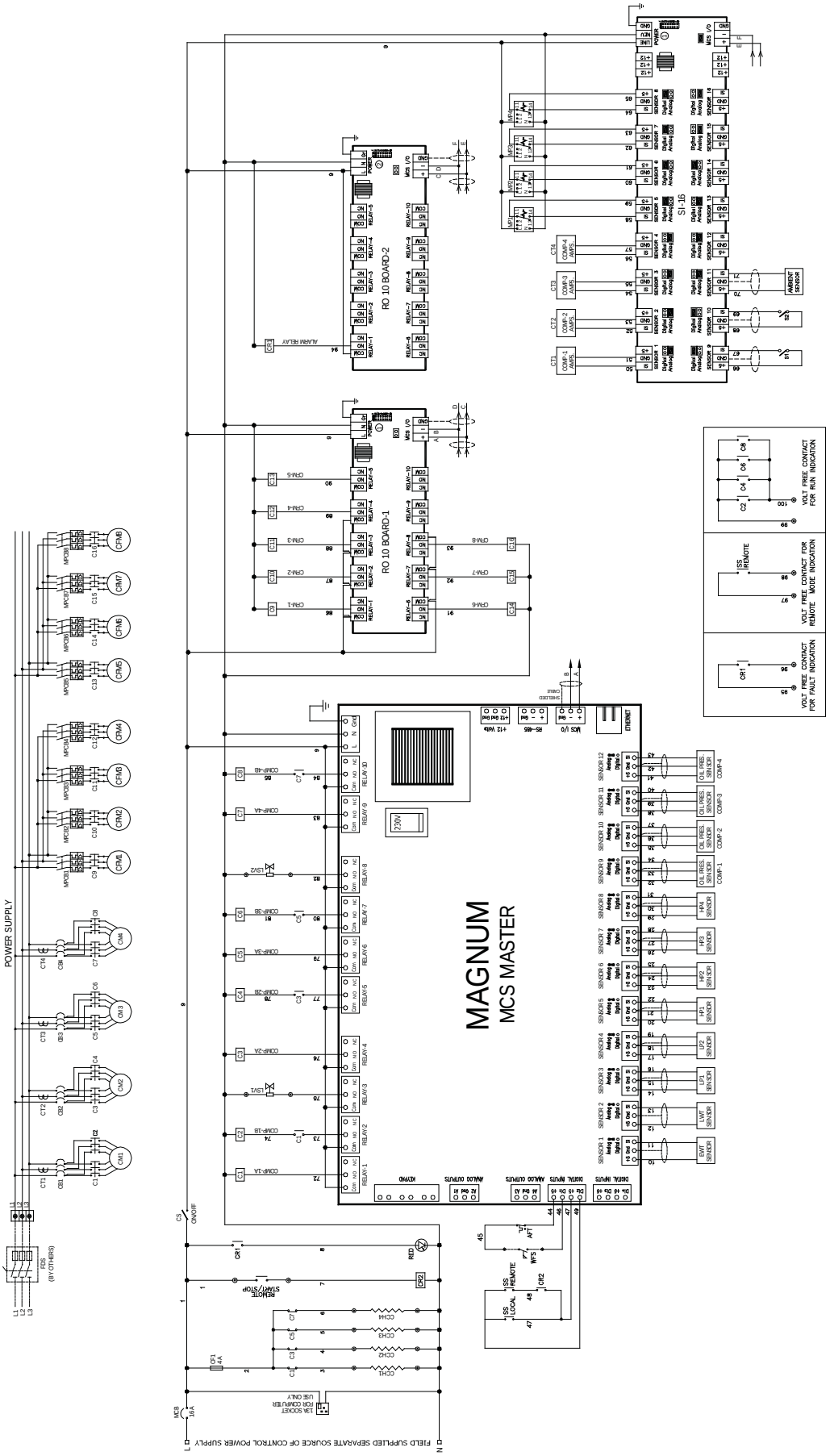

Power Entry Connections

NUMBER OF POWER ENTRY CONNECTIONS		
POWER SUPPLY	MODEL APCX	NUMBER OF POWER ENTRY
380 - 440V / 3Ph / 50 Hz	5035 - 5210	SINGLE
380 - 460V / 3Ph / 60 Hz	6040 - 6245	
220V / 3Ph / 60 Hz	6040 - 6210	SINGLE
	6215 - 6245	TWO

Table 14

Note :

All cable terminations are from the external isolator. Isolator is field supplied and installed (by others) within close proximity of the chiller in accordance with local codes and regulations.

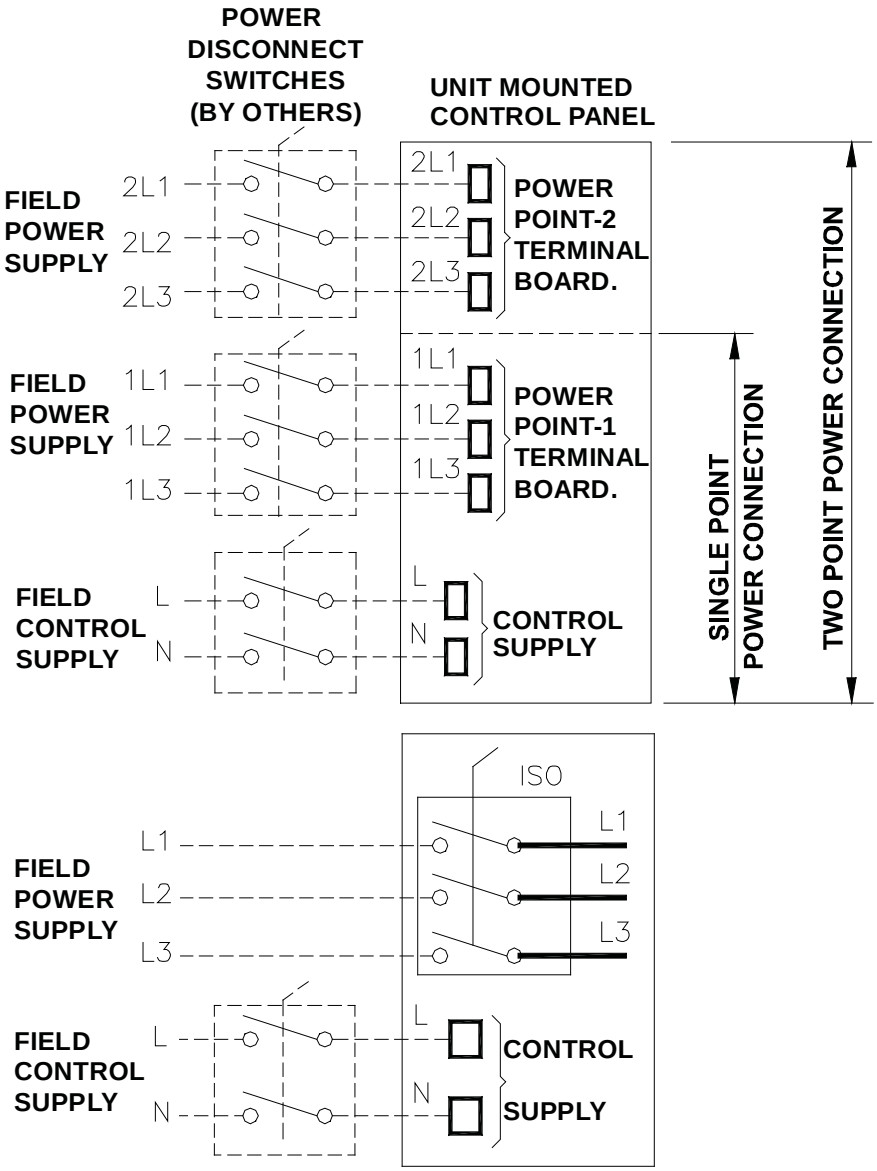

(FOR SINGLE POINT POWER CONNECTION. WITH BUILT-IN ISOLATOR - CONSULT SKM)

ELECTRICAL DATA

Power Supply: 380~415V/3PH/50Hz.

Model APCX	Unit Characteristic				Compressor			Condenser Fan Motor		
	MFA	MCA	ICF							
			DOL	PWS	QTY	RLA	LRA	QTY	FLA	LRA
5030	200	118	372	296	2	46	304	4	3.5	11.2
5040	200	140	382	306	2	56	304	4	3.5	11.2
5045	250	174	-	482	2	71	458	4	3.5	11.2
5050	315	194	-	506	2	80	476	4	3.5	11.2
5060	315	203	445	369	3	56	304	6	3.5	11.2
5065	315	237	614	545	2 + 1	71 + 56	458 + 304	6	3.5	11.2
5070	400	252	-	560	3	71	458	6	3.5	11.2
5075	400	272	-	584	2 + 1	80 + 71	476 + 458	6	3.5	11.2
5080	400	266	508	432	4	56	304	8	3.5	11.2
5085	400	300	677	608	2 + 2	71 + 56	458 + 304	8	3.5	11.2
5090	400	315	692	623	3 + 1	71 + 56	458 + 304	8	3.5	11.2
5095	400	330	-	638	4	71	458	8	3.5	11.2
5100	500	350	-	662	2 + 2	80 + 71	476 + 458	8	3.5	11.2
5105	500	368	-	680	4	80	476	8	3.5	11.2
5110	500	372	614	538	4 + 2	56 + 46	304 + 304	12	3.5	11.2
5120	500	392	634	558	6	56	304	12	3.5	11.2
5125	500	426	803	734	2 + 4	71 + 56	458 + 304	12	3.5	11.2
5130	630	441	818	749	3 + 3	71 + 56	458 + 304	12	3.5	11.2
5135	630	471	848	779	5 + 1	71 + 56	458 + 304	12	3.5	11.2
5140	630	486	-	794	6	71	458	12	3.5	11.2
5145	630	506	-	818	2 + 4	80 + 71	476 + 458	12	3.5	11.2
5150	630	524	-	836	4 + 2	80 + 71	476 + 458	12	3.5	11.2
5155	630	542	-	854	6	80	476	12	3.5	11.2
5160	630	552	929	860	2 + 6	71 + 56	458 + 304	16	3.5	11.2
5165	800	582	959	890	4 + 4	71 + 56	458 + 304	16	3.5	11.2
5175	800	612	989	920	6 + 2	71 + 56	458 + 304	16	3.5	11.2
5180	800	642	-	950	8	71	458	16	3.5	11.2
5190	800	662	-	974	2 + 6	80 + 71	476 + 458	16	3.5	11.2
5200	800	680	-	992	4 + 4	80 + 71	476 + 458	16	3.5	11.2
5205	800	698	-	1010	6 + 2	80 + 71	476 + 458	16	3.5	11.2
5210	800	716	-	1028	8	80	476	16	3.5	11.2

Table 15

NOTE:

- 220V/1PH/50Hz control power must be supplied from a separate source, through field supplied and installed disconnect switch.

Legend

MFA Maximum Fuse Amps (for fuse sizing), complies with NEC Article 440-22 & 430-52.

MCA Minimum Circuit Amps.(for wire sizing), complies with NEC article 440-33.

ICF Maximum Instantaneous Current Flow

PWS Part Winding Start
RLA Rated Load Amps. (at worst operating condition)
LRA Locked Rotor Amps
FLA Full Load Amps

Note :
Voltage imbalance not to exceed ± 2 % of the rated voltage

ELECTRICAL DATA

Rated Power Supply: 440V/3PH/50Hz

Model APCX	Unit Characteristic				Compressor			Condenser Fan Motor		
	MFA	MCA	ICF							
			DOL	PWS	QTY	RLA	LRA	QTY	FLA	LRA
5030	200	126	373	297	2	51	304	4	2.9	9.3
5040	250	151	384	308	2	62	304	4	2.9	9.3
5045	315	187	-	485	2	78	458	4	2.9	9.3
5050	315	210	-	511	2	88	476	4	2.9	9.3
5060	315	219	452	376	3	62	304	6	2.9	9.3
5065	400	255	622	553	2 + 1	78 + 62	458 + 304	6	2.9	9.3
5070	400	271	-	569	3	78	458	6	2.9	9.3
5075	400	293	-	594	2 + 1	88 + 78	476 + 458	6	2.9	9.3
5080	400	287	520	444	4	62	304	8	2.9	9.3
5085	400	323	690	621	2 + 2	78 + 62	458 + 304	8	2.9	9.3
5090	500	339	706	637	3 + 1	78 + 62	458 + 304	8	2.9	9.3
5095	500	355	-	653	4	78	458	8	2.9	9.3
5100	500	377	-	678	2 + 2	88 + 78	476 + 458	8	2.9	9.3
5105	500	397	-	698	4	88	476	8	2.9	9.3
5110	500	400	633	557	4 + 2	62 + 51	304 + 304	12	2.9	9.3
5120	500	422	655	579	6	62	304	12	2.9	9.3
5125	630	458	825	757	2 + 4	78 + 62	458 + 304	12	2.9	9.3
5130	630	474	841	773	3 + 3	78 + 62	458 + 304	12	2.9	9.3
5135	630	506	873	805	5 + 1	78 + 62	458 + 304	12	2.9	9.3
5140	630	522	-	821	6	78	458	12	2.9	9.3
5145	630	545	-	846	2 + 4	88 + 78	476 + 458	12	2.9	9.3
5150	800	565	-	866	4 + 2	88 + 78	476 + 458	12	2.9	9.3
5155	800	585	-	886	6	88	476	12	2.9	9.3
5160	800	594	961	892	2 + 6	78 + 62	458 + 304	16	2.9	9.3
5165	800	626	993	924	4 + 4	78 + 62	458 + 304	16	2.9	9.3
5175	800	658	1025	956	6 + 2	78 + 62	458 + 304	16	2.9	9.3
5180	800	690	-	988	8	78	458	16	2.9	9.3
5190	800	712	-	1013	2 + 6	88 + 78	476 + 458	16	2.9	9.3
5200	1000	732	-	1033	4 + 4	88 + 78	476 + 458	16	2.9	9.3
5205	1000	752	-	1053	6 + 2	88 + 78	476 + 458	16	2.9	9.3
5210	1000	772	-	1073	8	88	476	16	2.9	9.3

Table 16

NOTE:

- 240V/1PH/50Hz control power must be supplied from a separate source, through field supplied and installed disconnect switch.

Legend

MFA Maximum Fuse Amps (for fuse sizing), complies with NEC Article 440-22 & 430-52.

MCA Minimum Circuit Amps.(for wire sizing), complies with NEC article 440-33.

ICF Maximum Instantaneous Current Flow

PWS Part Winding Start
RLA Rated Load Amps. (at worst operating condition)
LRA Locked Rotor Amps
FLA Full Load Amps

Note :
Voltage imbalance not to exceed ± 2 % of the rated voltage

ELECTRICAL DATA

Power Supply: 460V/3PH/60Hz

Model APCX	Unit Characteristic				Compressor			Condenser Fan Motor		
	MFA	MCA	ICF							
			DOL	PWS	QTY	RLA	LRA	QTY	FLA	LRA
6035	200	124	374	301	2	46	292	4	5	21
6045	200	146	384	311	2	56	292	4	5	21
6050	250	180	-	496	2	71	458	4	5	21
6060	315	200	-	522	2	80	478	4	5	21
6065	315	212	450	377	3	56	292	6	5	21
6075	315	246	631	562	2 + 1	71 + 56	458 + 292	6	5	21
6080	400	261	-	577	3	71	458	6	5	21
6085	400	281	-	603	2 + 1	80 + 71	478 + 458	6	5	21
6090	400	278	516	443	4	56	292	8	5	21
6100	400	312	697	628	2 + 2	71 + 56	458 + 292	8	5	21
6105	400	327	712	643	3 + 1	71 + 56	458 + 292	8	5	21
6110	500	342	-	658	4	71	458	8	5	21
6115	500	362	-	684	2 + 2	80 + 71	478 + 458	8	5	21
6125	500	380	-	702	4	80	478	8	5	21
6130	500	390	628	555	4 + 2	56 + 46	292 + 292	12	5	21
6135	500	410	648	575	6	56	292	12	5	21
6140	630	444	829	760	2 + 4	71 + 56	458 + 292	12	5	21
6145	630	459	844	775	3 + 3	71 + 56	458 + 292	12	5	21
6155	630	489	874	805	5 + 1	71 + 56	458 + 292	12	5	21
6160	630	504	-	820	6	71	458	12	5	21
6170	630	524	-	846	2 + 4	80 + 71	478 + 458	12	5	21
6175	630	542	-	864	4 + 2	80 + 71	478 + 458	12	5	21
6185	800	560	-	882	6	80	478	12	5	21
6190	800	576	961	892	2 + 6	71 + 56	458 + 292	16	5	21
6195	800	606	991	922	4 + 4	71 + 56	458 + 292	16	5	21
6205	800	636	1021	952	6 + 2	71 + 56	458 + 292	16	5	21
6215	800	666	-	982	8	71	458	16	5	21
6220	800	686	-	1008	2 + 6	80 + 71	478 + 458	16	5	21
6230	800	704	-	1026	4 + 4	80 + 71	478 + 458	16	5	21
6235	800	722	-	1044	6 + 2	80 + 71	478 + 458	16	5	21
6240	1000	740	-	1062	8	80	478	16	5	21

Table 17

NOTE:

- 220V/1PH/50Hz control power must be supplied from a separate source, through field supplied and installed disconnect switch.

Legend

MFA Maximum Fuse Amps (for fuse sizing), complies with NEC Article 440-22 & 430-52.

MCA Minimum Circuit Amps.(for wire sizing), complies with NEC article 440-33.

ICF Maximum Instantaneous Current Flow

PWS Part Winding Start

RLA Rated Load Amps. (at worst operating condition)

LRA Locked Rotor Amps

FLA Full Load Amps

Note :

Voltage imbalance not to exceed ± 2 % of the rated voltage

ELECTRICAL DATA

Power Supply: 380V/3PH/60Hz

Model APCX	Unit Characteristic				Compressor			Condenser Fan Motor		
	MFA	MCA	ICF							
			DOL	PWS	QTY	RLA	LRA	QTY	FLA	LRA
6035	250	152	423	340	2	58	332	4	5.3	17.5
6045	250	181	436	353	2	71	332	4	5.3	17.5
6050	315	221	-	552	2	89	505	4	5.3	17.5
6060	400	248	-	627	2	101	579	4	5.3	17.5
6065	400	263	518	435	3	71	332	6	5.3	17.5
6075	400	303	709	633	2 + 1	89 + 71	505 + 332	6	5.3	17.5
6080	500	321	-	651	3	89	505	6	5.3	17.5
6085	500	348	-	726	2 + 1	101 + 89	579 + 505	6	5.3	17.5
6090	500	344	600	517	4	71	332	8	5.3	17.5
6100	500	385	791	715	2 + 2	89 + 71	505 + 332	8	5.3	17.5
6105	500	403	809	733	3 + 1	89 + 71	505 + 332	8	5.3	17.5
6110	630	421	-	751	4	89	505	8	5.3	17.5
6115	630	448	-	826	2 + 2	101 + 89	579 + 505	8	5.3	17.5
6125	630	472	-	850	4	101	579	8	5.3	17.5
6130	630	481	737	654	4 + 2	71 + 58	332 + 332	12	5.3	17.5
6135	630	507	763	680	6	71	332	12	5.3	17.5
6140	800	548	954	878	2 + 4	89 + 71	505 + 332	12	5.3	17.5
6145	800	566	972	896	3 + 3	89 + 71	505 + 332	12	5.3	17.5
6155	800	602	1008	932	5 + 1	89 + 71	505 + 332	12	5.3	17.5
6160	800	620	-	950	6	89	505	12	5.3	17.5
6170	800	647	-	1025	2 + 4	101 + 89	579 + 505	12	5.3	17.5
6175	800	671	-	1049	4 + 2	101 + 89	579 + 505	12	5.3	17.5
6185	800	695	-	1073	6	101	579	12	5.3	17.5
6190	800	711	1117	1041	2 + 6	89 + 71	505 + 332	16	5.3	17.5
6195	1000	747	1153	1077	4 + 4	89 + 71	505 + 332	16	5.3	17.5
6205	1000	783	1189	1113	6 + 2	89 + 71	505 + 332	16	5.3	17.5
6215	1000	819	-	1149	8	89	505	16	5.3	17.5
6220	1000	846	-	1224	2 + 6	101 + 89	579 + 505	16	5.3	17.5
6230	1000	870	-	1248	4 + 4	101 + 89	579 + 505	16	5.3	17.5
6235	1000	894	-	1272	6 + 2	101 + 89	579 + 505	16	5.3	17.5
6240	1000	918	-	1296	8	101	579	16	5.3	17.5

Table 18

NOTE:

- 220V/1PH/60Hz control power must be supplied from a separate source, through field supplied and installed disconnect switch.

Legend

MFA Maximum Fuse Amps (for fuse sizing), complies with NEC Article 440-22 & 430-52.

MCA Minimum Circuit Amps.(for wire sizing), complies with NEC article 440-33.

ICF Maximum Instantaneous Current Flow

PWS Part Winding Start

RLA Rated Load Amps. (at worst operating condition)

LRA Locked Rotor Amps

FLA Full Load Amps

Note :
Voltage imbalance not to exceed ± 2 % of the rated voltage

ELECTRICAL DATA

Power Supply: 220V/3PH/60Hz

Model APCX	Unit Characteristic				Compressor			Condenser Fan Motor		
	MFA	MCA	ICF							
			DOL	PWS	QTY	RLA	LRA	QTY	FLA	LRA
6035	400	263	-	616	2	101	611	4	9	29.7
6045	500	313	-	832	2	123	870	4	9	29.7
6050	630	387	-	1029	2	156	960	4	9	29.7
6060	630	425	-	1081	2	173	1002	4	9	29.7
6065	630	454	-	973	3	123	870	6	9	29.7
6075	800	528	-	1170	2 + 1	156 + 123	960 + 870	6	9	29.7
6080	800	561	-	1203	3	156	960	6	9	29.7
6085	800	599	-	1255	2 + 1	173 + 156	1002 + 960	6	9	29.7
6090	800	595	-	1114	4	123	870	8	9	29.7
6100	1000	669	-	1311	2 + 2	156 + 123	960 + 870	8	9	29.7
6105	1000	702	-	1344	3 + 1	156 + 123	960 + 870	8	9	29.7
6110	1000	735	-	1377	4	156	960	8	9	29.7
6115	1000	773	-	1429	2 + 2	173 + 156	1002 + 960	8	9	29.7
6125	1000	807	-	1463	4	173	1002	8	9	29.7
6130	1000	833	-	1352	4 + 2	123 + 101	870 + 611	12	9	29.7
6135	1000	877	-	1396	6	123	870	12	9	29.7
6140	1250	951	-	1593	2 + 4	156 + 123	960 + 870	12	9	29.7
6145	1250	984	-	1626	3 + 3	156 + 123	960 + 870	12	9	29.7
6155	1250	1050	-	1692	5 + 1	156 + 123	960 + 870	12	9	29.7
6160	1250	1083	-	1725	6	156	960	12	9	29.7
6170	1500	1121	-	1777	2 + 4	173 + 156	1002 + 960	12	9	29.7
6175	800+800	616+582	-	1272+1203	4 + 2	173 + 156	1002 + 960	12	9	29.7
6185	800+800	616+616	-	1272+1272	6	173	1002	12	9	29.7
6190	1000+800	669+595	-	1311+1114	2 + 6	156 + 123	960 + 870	16	9	29.7
6195	1000+800	735+595	-	1377+1114	4 + 4	156 + 123	960 + 870	16	9	29.7
6205	1000+1000	735+669	-	1377+1311	6 + 2	156 + 123	960 + 870	16	9	29.7
6215	1000+1000	735+735	-	1377+1377	8	156	960	16	9	29.7
6220	1000+1000	773+735	-	1429+1377	2 + 6	173 + 156	1002 + 960	16	9	29.7
6230	1000+1000	807+735	-	1463+1377	4 + 4	173 + 156	1002 + 960	16	9	29.7
6235	1000+1000	807+773	-	1463+1429	6 + 2	173 + 156	1002 + 960	16	9	29.7
6240	1000+1000	807+807	-	1463+1463	8	173	1002	16	9	29.7

Table 19

NOTE:

- 220V/1PH/60Hz control power must be supplied from a separate source, through field supplied and installed disconnect switch.

Legend

MFA Maximum Fuse Amps (for fuse sizing), complies with NEC Article 440-22 & 430-52.

MCA Minimum Circuit Amps.(for wire sizing), complies with NEC article 440-33.

ICF Maximum Instantaneous Current Flow

PWS Part Winding Start

RLA Rated Load Amps. (at worst operating condition)

LRA Locked Rotor Amps

FLA Full Load Amps

Dimensional Data

APCX Models: 5030~5050, 6035~6060

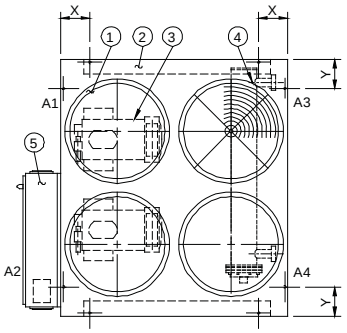

MODEL APCX-	DIMENSIONS				
	A	P	X	Y	C.W. IN/OUT
5030 6035	78 [1981]	7.46 [189]	-	10 [254]	MPT 3" [75]
5040 6045		9.31 [236]			4" [DN 100]
5045 6050	92 [2337]		10 [254]	-	
5050 6060					

Table 20

A1-A4 ARE LOADING POINTS Ø3/4[19]

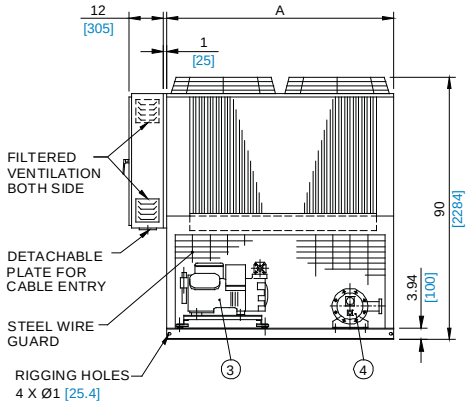

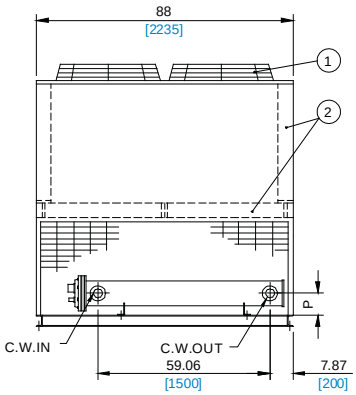

LEGEND

1. CONDENSER FAN
2. CONDENSER COIL
3. COMPRESSOR
4. EVAPORATOR
5. CONTROL PANEL

ALL DIMENSIONS ARE IN INCHES [MM]

APCX Models: 5060~5075, 6065~6085

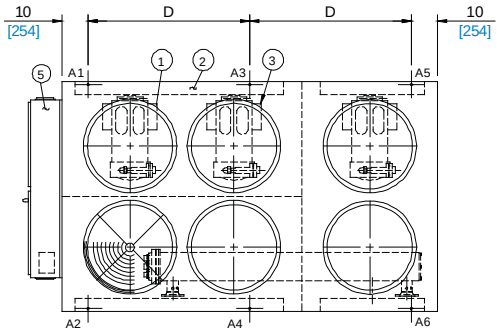

MODEL APCX-	DIMENSIONS					
	A	B	C	D	P	C.W. IN/OUT
5060	120 [3048]	78.74 [2000]	11.5 [292]	50 [1270]	7.28 [185]	4" [DN 100]
5065	136 [3454]	89.76 [2280]	11.81 [300]	58 [1473]	8.84 [224]	
5070	144 [3658]			62 [1575]		
5075						
6065	120 [3048]	68.11 [1730]	11.5 [292]	50 [1270]	10.31 [262]	6" [DN 150]
6075	136 [3454]	88.58 [2250]	11.81 [300]	58 [1473]	10.11 [257]	5" [DN 125]
6080	144 [3658]			62 [1575]		
6085						

Table 21

A1-A6 ARE LOADING POINTS Ø3/4[19]

APCX- 5065,5070 & 5075
APCX- 6065,6075,6080 & 6085

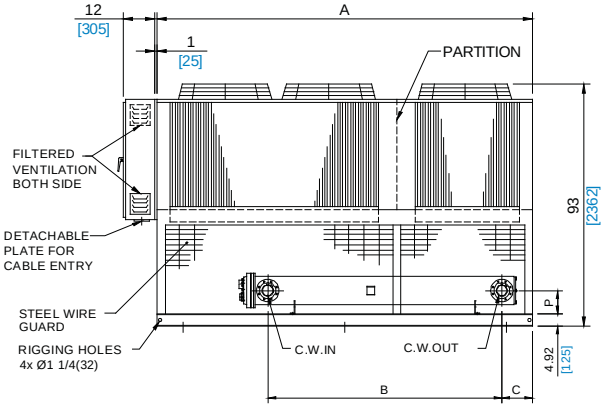

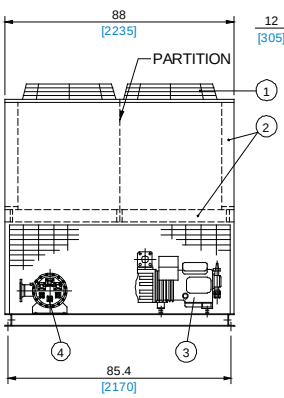

APCX- 5060

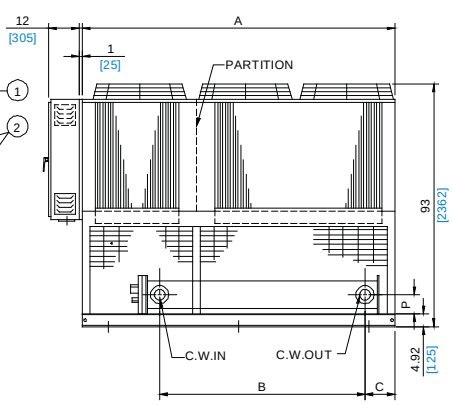

Dimensional Data

APCX Models: 5080~5105, 6090~6125

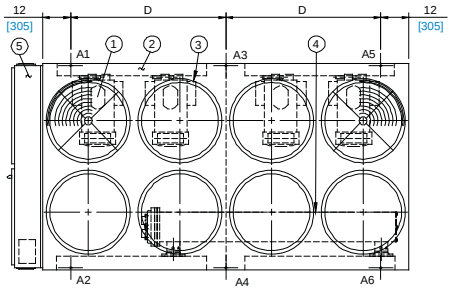

MODEL APCX-	DIMENSIONS A	B	C	D	P	C.W. IN/OUT
5080 5085	156 [3962]	88.58 [2250]	19.69 [300]	66 [1676]	10.11 [257]	5" [DN 125]
5090	170 [4318]			73 [1854]		
5095 5100 5105	184 [4674]		23.62 [600]	80 [2032]		
6090 6100	156 [3962]	86.61 [2200]	15.75 [400]	66 [1676]	11.69 [297]	6" [DN 150]
6105	170 [4318]			73 [1854]		
6110 6115 6125	184 [4674]		23.62 [600]	80 [2032]		

Table 22

A1-A6 ARE LOADING POINTS Ø3/4 [19]

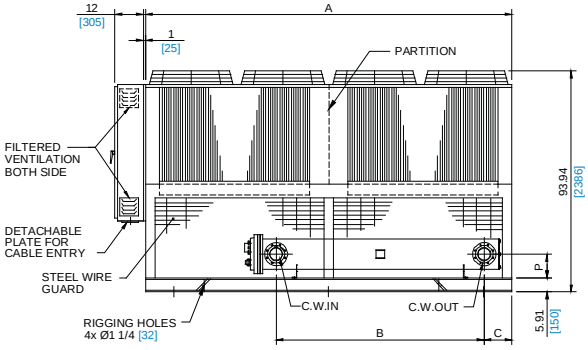

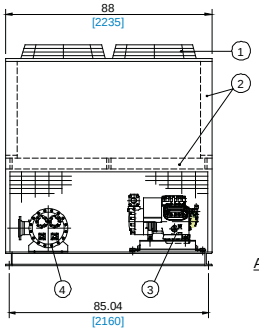

LEGEND

1. CONDENSER FAN
2. CONDENSER COIL
3. COMPRESSOR
4. EVAPORATOR
5. CONTROL PANEL

ALL DIMENSIONS ARE IN INCHES [MM]

APCX Models: 5110~5155, 6130~6185

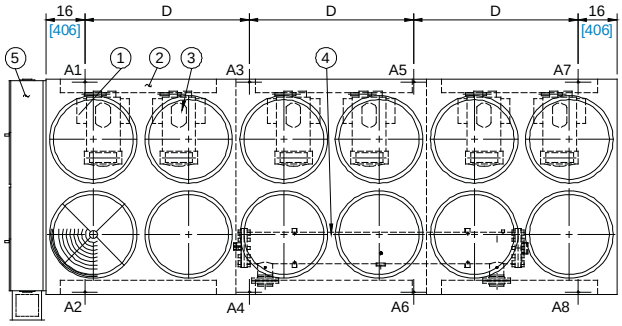

MODEL APCX-	DIMENSIONS A	B	C	D	P
5110	234 [5944]	94.88 [2410]	49.21 [1250]	67.33 [1710]	10.36 [263]
5120					
5125					
5130					
5135	262 [6655]		62.99 [1600]	76.67 [1947]	
5140	276 [7010]			81.33 [2066]	
5145 5150 5155					

MODEL APCX-	DIMENSIONS A	B	C	D	P
6130	234 [5944]	94.88 [2410]	49.21 [1250]	67.33 [1710]	10.36 [263]
6135					
6140					
6145					
6155	262 [6655]		62.99 [1600]	76.67 [1947]	
6160	276 [7010]	92.91 [2360]		81.33 [2066]	12.76 [324]
6170 6175 6185					

Table 23

A1-A8 ARE LOADING POINTS Ø3/4 [19]

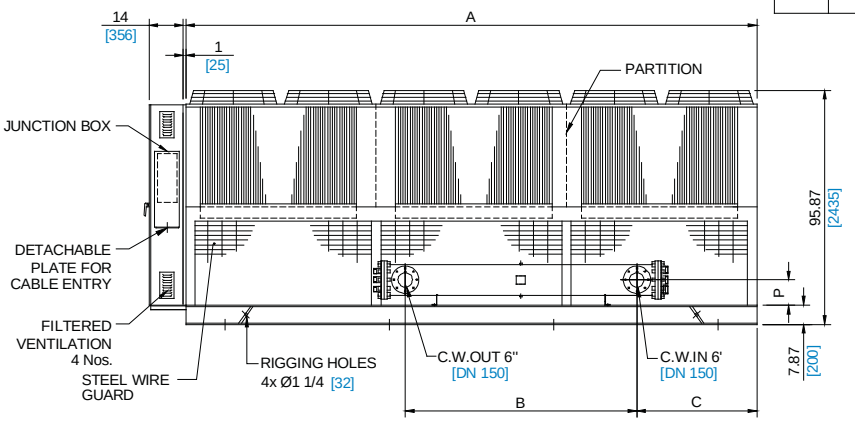

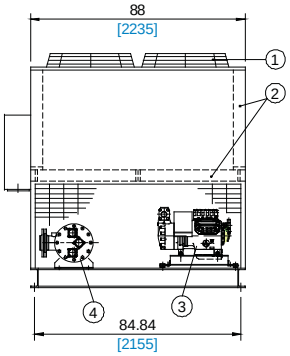

Dimensional Data

APCX Models: 5160~5210, 6190~6240

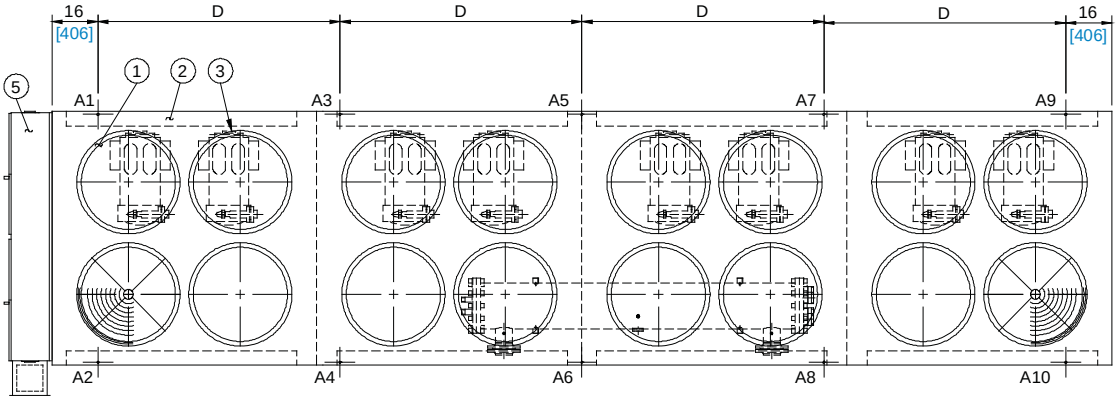

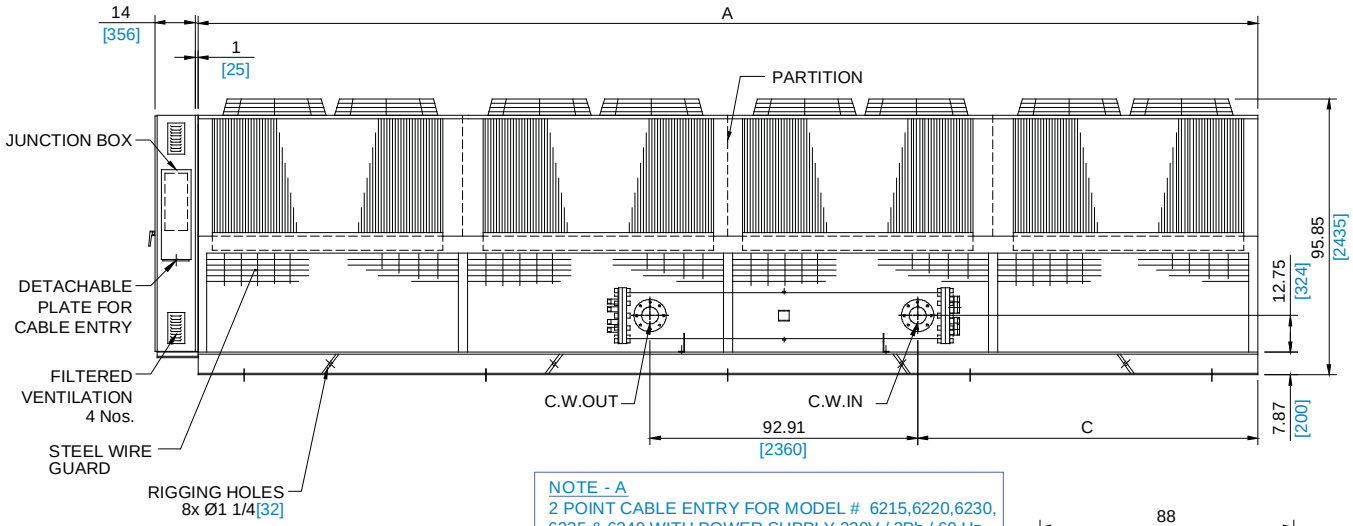

NOTE - A
2 POINT CABLE ENTRY FOR MODEL # 6215,6220,6230, 6235 & 6240 WITH POWER SUPPLY 220V / 3Ph / 60 Hz CERTIFIED DRGS. ARE AVAILABLE ON REQUEST.

MODEL APCX-	DIMENSIONS A	C	D	C.W. IN/OUT
5160	312 [7925]	94.48 [2400]	70 [1778]	6" [DN 150]
5165				
5175	340 [8636]		77 [1956]	
5180	368 [9347]	118.11 [3000]	84 [2134]	8" [DN 200]
5190				
5200				
5205				
5210				

MODEL APCX-	DIMENSIONS A	C	D	C.W. IN/OUT
6190	312 [7925]	94.48 [2400]	70 [1778]	8" [DN 200]
6195				
6205	340 [8636]		77 [1956]	
6215	368 [9347]	118.11 [3000]	84 [2134]	
6220				
6230				
6235				
6240				

A1-A10 ARE LOADING POINTS Ø3/4[19]

Table 24

LEGEND

1. CONDENSER FAN
2. CONDENSER COIL
3. COMPRESSOR
4. EVAPORATOR
5. CONTROL PANEL

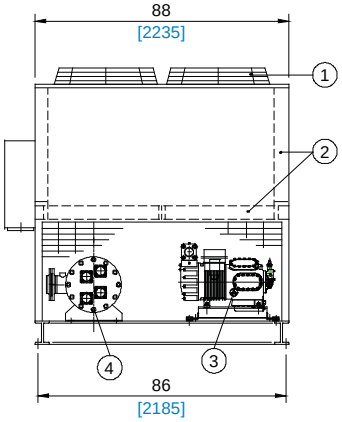

SIDE VIEW

ALL DIMENSIONS ARE IN INCHES [MM]

Loading Points 50Hz

APCX Models	Units	Mounting Loads										Operating Weight
		A1	A2	A3	A4	A5	A6	A7	A8	A9	A10	
5030	lbs	1147	1255	892	838	-	-	-	-	-	-	4132
	kg	520	569	405	380	-	-	-	-	-	-	1874
5040	lbs	1229	1331	1031	952	-	-	-	-	-	-	4543
	kg	557	604	468	432	-	-	-	-	-	-	2060
5045	lbs	1498	1610	1102	1011	-	-	-	-	-	-	5221
	kg	679	730	500	459	-	-	-	-	-	-	2368
5050	lbs	1500	1612	1103	1012	-	-	-	-	-	-	5227
	kg	680	731	500	459	-	-	-	-	-	-	2371
5060	lbs	1200	1091	1377	931	1056	979	-	-	-	-	6634
	kg	544	495	624	422	479	444	-	-	-	-	3009
5065	lbs	1352	1064	1711	1244	1008	898	-	-	-	-	7277
	kg	613	483	776	564	457	407	-	-	-	-	3300
5070	lbs	1431	1087	1738	1280	1107	947	-	-	-	-	7590
	kg	649	493	788	580	502	429	-	-	-	-	3442
5075	lbs	1433	1087	1740	1281	1107	947	-	-	-	-	7595
	kg	650	493	789	581	502	429	-	-	-	-	3444
5080	lbs	1828	1509	1849	1530	1463	1236	-	-	-	-	9415
	kg	829	684	839	694	663	561	-	-	-	-	4270
5085	lbs	1910	1532	1962	1562	1545	1260	-	-	-	-	9771
	kg	866	695	890	708	701	571	-	-	-	-	4431
5090	lbs	1913	1436	2124	1675	1660	1399	-	-	-	-	10207
	kg	868	651	963	760	753	634	-	-	-	-	4629
5095	lbs	2035	1534	2275	1805	1706	1394	-	-	-	-	10749
	kg	923	696	1032	819	774	632	-	-	-	-	4875
5100	lbs	2036	1535	2277	1805	1707	1394	-	-	-	-	10754
	kg	923	696	1033	819	774	632	-	-	-	-	4877
5105	lbs	2036	1535	2278	1806	1708	1395	-	-	-	-	10758
	kg	923	696	1033	819	775	633	-	-	-	-	4879
5110	lbs	2095	1595	1904	1582	1974	1749	1604	1260	-	-	13763
	kg	950	723	863	717	895	793	727	571	-	-	6242
5120	lbs	2141	1641	1973	1641	2032	1790	1621	1265	-	-	14104
	kg	971	744	895	744	922	812	735	574	-	-	6396
5125	lbs	2232	1667	2090	1674	2102	1810	1621	1265	-	-	14461
	kg	1012	756	948	759	953	821	735	574	-	-	6558
5130	lbs	2232	1667	2090	1674	2150	1824	1712	1291	-	-	14640
	kg	1012	756	948	759	975	827	776	585	-	-	6639
5135	lbs	2319	1739	2224	1755	2415	2049	1825	1322	-	-	15648
	kg	1052	789	1009	796	1095	929	828	600	-	-	7097
5140	lbs	2388	1786	2370	1794	2468	2117	1868	1382	-	-	16173
	kg	1083	810	1075	814	1119	960	847	627	-	-	7335
5145	lbs	2389	1786	2371	1794	2469	2117	1868	1382	-	-	16176
	kg	1083	810	1075	814	1120	960	847	627	-	-	7336
5150	lbs	2390	1787	2372	1795	2469	2117	1869	1382	-	-	16181
	kg	1084	810	1076	814	1120	960	848	627	-	-	7338
5155	lbs	2390	1787	2373	1795	2471	2118	1870	1383	-	-	16187
	kg	1084	810	1076	814	1121	961	848	627	-	-	7341
5160	lbs	2410	1834	2211	1623	2346	2210	2198	1950	1688	1178	19648
	kg	1093	832	1003	736	1064	1002	997	884	766	534	8911
5165	lbs	2410	1834	2211	1623	2407	2228	2321	1985	1781	1205	20005
	kg	1093	832	1003	736	1092	1010	1053	900	808	546	9073
5175	lbs	2475	1893	2300	1543	2575	2402	2537	2203	1875	1273	21076
	kg	1122	859	1043	700	1168	1089	1151	999	850	577	9558
5180	lbs	2563	1950	2474	1723	2740	2556	2592	2113	1932	1319	21962
	kg	1162	884	1122	781	1243	1159	1176	958	876	598	9960
5190	lbs	2566	1952	2479	1730	2750	2584	2599	2130	1934	1322	22046
	kg	1164	885	1124	785	1247	1172	1179	966	877	600	9998
5200	lbs	2566	1952	2479	1730	2751	2584	2600	2130	1935	1322	22049
	kg	1164	885	1124	785	1248	1172	1179	966	878	600	10000
5205	lbs	2567	1953	2481	1731	2752	2584	2600	2130	1935	1322	22055
	kg	1164	886	1125	785	1248	1172	1179	966	878	600	10002
5210	lbs	2567	1953	2481	1731	2753	2585	2602	2130	1936	1322	22060
	kg	1164	886	1125	785	1249	1172	1180	966	878	600	10005

Table 25

Loading Points 60Hz

APCX Models	Units	Mounting Loads										Operating Weight
		A1	A2	A3	A4	A5	A6	A7	A8	A9	A10	
6035	lbs	1147	1255	892	838	-	-	-	-	-	-	4132
	kg	520	569	405	380	-	-	-	-	-	-	1874
6045	lbs	1229	1331	1031	952	-	-	-	-	-	-	4543
	kg	557	604	468	432	-	-	-	-	-	-	2060
6050	lbs	1498	1610	1102	1011	-	-	-	-	-	-	5221
	kg	679	730	500	459	-	-	-	-	-	-	2368
6060	lbs	1500	1612	1103	1012	-	-	-	-	-	-	5227
	kg	680	731	500	459	-	-	-	-	-	-	2371
6065	lbs	1261	980	1459	1207	978	903	-	-	-	-	6788
	kg	572	444	662	547	444	410	-	-	-	-	3078
6075	lbs	1368	1124	1739	1355	1037	1013	-	-	-	-	7636
	kg	620	510	789	615	470	459	-	-	-	-	3463
6080	lbs	1445	1137	1766	1389	1138	1075	-	-	-	-	7950
	kg	655	516	801	630	516	488	-	-	-	-	3605
6085	lbs	1446	1137	1767	1390	1138	1075	-	-	-	-	7953
	kg	656	516	801	630	516	488	-	-	-	-	3607
6090	lbs	1833	1465	1978	1803	1558	1435	-	-	-	-	10072
	kg	831	664	897	818	707	651	-	-	-	-	4568
6100	lbs	1915	1489	2091	1835	1640	1459	-	-	-	-	10429
	kg	868	675	948	832	744	662	-	-	-	-	4730
6105	lbs	1923	1446	2257	1981	1730	1526	-	-	-	-	10863
	kg	872	656	1024	898	785	692	-	-	-	-	4927
6110	lbs	2040	1526	2414	2122	1775	1529	-	-	-	-	11406
	kg	925	692	1095	962	805	693	-	-	-	-	5173
6115	lbs	2041	1526	2416	2122	1776	1529	-	-	-	-	11410
	kg	926	692	1096	962	805	693	-	-	-	-	5175
6125	lbs	2042	1526	2417	2122	1777	1530	-	-	-	-	11414
	kg	926	692	1096	962	806	694	-	-	-	-	5176
6130	lbs	2095	1595	1904	1582	1974	1749	1604	1260	-	-	13763
	kg	950	723	863	717	895	793	727	571	-	-	6242
6135	lbs	2141	1641	1973	1641	2032	1790	1621	1265	-	-	14104
	kg	971	744	895	744	922	812	735	574	-	-	6396
6140	lbs	2232	1667	2090	1674	2102	1810	1621	1265	-	-	14461
	kg	1012	756	948	759	953	821	735	574	-	-	6558
6145	lbs	2232	1667	2090	1674	2150	1824	1712	1291	-	-	14640
	kg	1012	756	948	759	975	827	776	585	-	-	6639
6155	lbs	2319	1739	2224	1755	2415	2049	1825	1322	-	-	15648
	kg	1052	789	1009	796	1095	929	828	600	-	-	7097
6160	lbs	2389	1787	2433	1949	2592	2428	1902	1469	-	-	16949
	kg	1083	810	1103	884	1176	1101	863	666	-	-	7687
6170	lbs	2390	1788	2434	1949	2592	2428	1902	1469	-	-	16952
	kg	1084	811	1104	884	1176	1101	863	666	-	-	7688
6175	lbs	2391	1788	2435	1949	2592	2428	1902	1469	-	-	16954
	kg	1084	811	1104	884	1176	1101	863	666	-	-	7689
6185	lbs	2391	1788	2436	1950	2594	2428	1904	1469	-	-	16960
	kg	1084	811	1105	884	1176	1101	863	666	-	-	7692
6190	lbs	2411	1835	2213	1627	2350	2222	2201	1959	1688	1179	19685
	kg	1093	832	1004	738	1066	1008	998	888	766	535	8927
6195	lbs	2412	1837	2216	1631	2416	2251	2328	2003	1783	1207	20084
	kg	1094	833	1005	740	1096	1021	1056	908	809	547	9108
6205	lbs	2477	1895	2303	1547	2584	2428	2545	2223	1877	1275	21154
	kg	1123	859	1044	702	1172	1101	1154	1008	851	578	9594
6215	lbs	2565	1952	2478	1730	2750	2584	2599	2130	1934	1322	22044
	kg	1163	885	1124	785	1247	1172	1179	966	877	600	9997
6220	lbs	2566	1952	2479	1730	2750	2584	2599	2130	1934	1322	22046
	kg	1164	885	1124	785	1247	1172	1179	966	877	600	9998
6230	lbs	2566	1952	2479	1730	2751	2584	2600	2130	1935	1322	22049
	kg	1164	885	1124	785	1248	1172	1179	966	878	600	10000
6235	lbs	2567	1953	2481	1731	2752	2584	2600	2130	1935	1322	22055
	kg	1164	886	1125	785	1248	1172	1179	966	878	600	10002
6240	lbs	2567	1953	2481	1731	2753	2585	2602	2130	1936	1322	22060
	kg	1164	886	1125	785	1249	1172	1180	966	878	600	10005

Table 26

Installation & Application Data

Location/Space Requirements

Due to the vertical air flow discharge condenser design, it is recommended that certain precautions are to be taken before installation. There should be no obstruction on the air flow. Orient the unit so that prevailing winds blow parallel to the unit length thus minimizing the effects on condensing pressure. If it is not practical to orient the unit in this manner, a wind deflecting shield should be considered.

Refer to figure for recommended clearance around chillers to avoid warm air recirculation or coil starvation.

It is also necessary to provide adequate clearance on all sides of the unit for service access and satisfactory performance. This will prevent excessive condensing temperatures and enhance system performance and operating economy.

Foundation

A flat concrete foundation or floor which can support the weight of the equipment must be provided as the unit must be level for proper operation and functioning of controls.

Vibration Isolation

Under certain critical conditions it is recommended that vibration isolators of rubber-in-shear or spring type be installed under the base.

The isolators must be designed for the operating weight of the unit. For operating load points refer to the Dimensional Data. Correct selection of types of isolators depends upon application and structure. To further reduce the transmission of vibration, it is recommended that flexible water connections suitable for the system pressure be installed on the water inlet connections of the chiller.

For critical applications or locations, services of a noise and vibration expert are recommended.

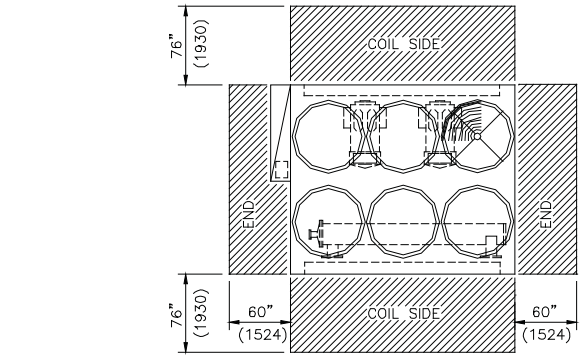

SINGLE UNIT INSTALL ATION

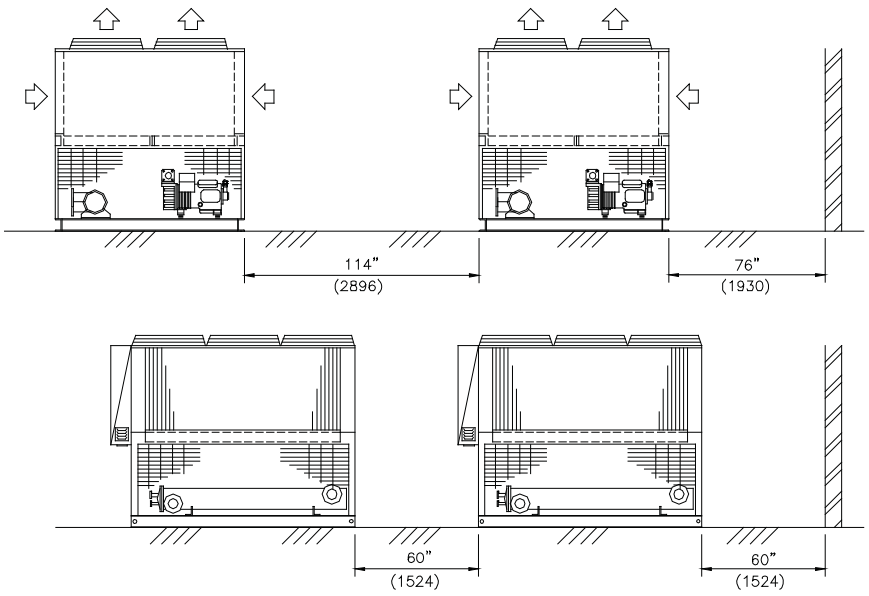

MULTIPLE UNIT INSTALLATI ON

Figure A

Water Piping Practices

SKM suggests abiding by the local authorities' chilled water piping recommendations and practices as they can provide the installer the building and safety codes required for the installation.

Water piping should be designed to have a minimum number of bends and horizontal piping levels. Below are the following components it should have:

1. Temperature and pressure gauges in entering and leaving chiller water piping for unit servicing and commissioning. Pressure gauges must be installed on the same level.
2. Vibration eliminators in entering and leaving chilled water piping to lessen the sound and vibration transmitted to the building.
3. Pipe strainer in the evaporator entering piping to protect the evaporator from water debris and maintain chiller efficiency.
4. Water flow switch in the leaving chilled water piping, wired to the terminals provided in the control panel, to make sure that it has sufficient flow of water in the evaporator. This will prevent the evaporator from freezing up when the water flow is interrupted and avoid compressor slugging on start-up.
5. To isolate the unit from the piping system when servicing or during maintenance, install a shut off valve on the entering and leaving chilled water piping.
6. Expansion Tank provides additional space in the chilled water piping system as temperature rises and furthermore, it maintains a positive pressure within the working limitations of the system.
7. Air Vents at high points in the chilled water system to bleed air from the system.
8. Vapor barrier on the outside of the insulation to avoid condensation in the cold surface of the pipe that may cause damage on the building structure. A thorough leak test should be made before insulating the pipe.

Flush all chilled water piping before making the final connection to the unit. SKM recommends hiring services of water treatment specialist to determine the type of necessary treatment. Improper or untreated chilled water leads to scaling, erosion, corrosion or algae that can cause inefficient operation and tube damage. SKM will not be liable for damages caused by improper or untreated chilled water.

TYPICAL CHILLED WATER PIPING

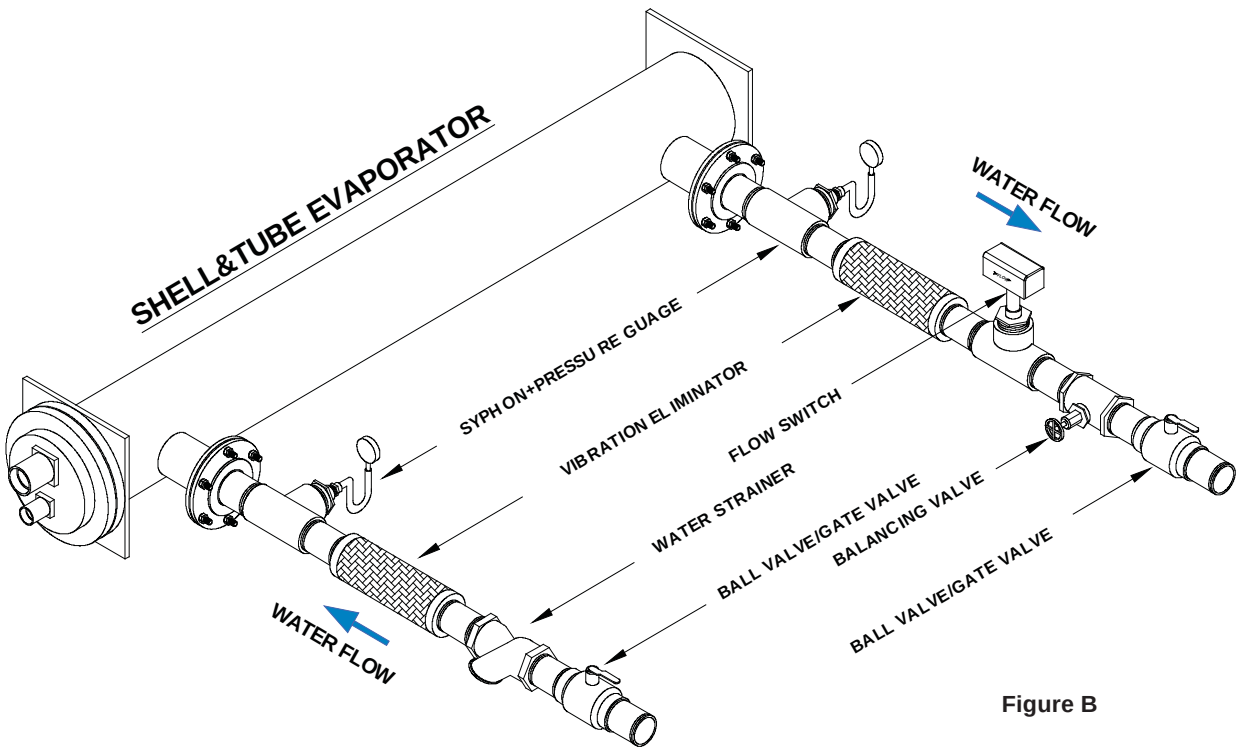

Figure B

Vibration Isolation

It is recommended to install under the base of the unit a vibration isolation of rubber-in-shear or spring type for further reduction of sound and vibration transmission to building structures . Vibration isolators must be correctly designed for each mounting loads of the unit. Refer to unit certified drawing for operating weight at each mounting points.

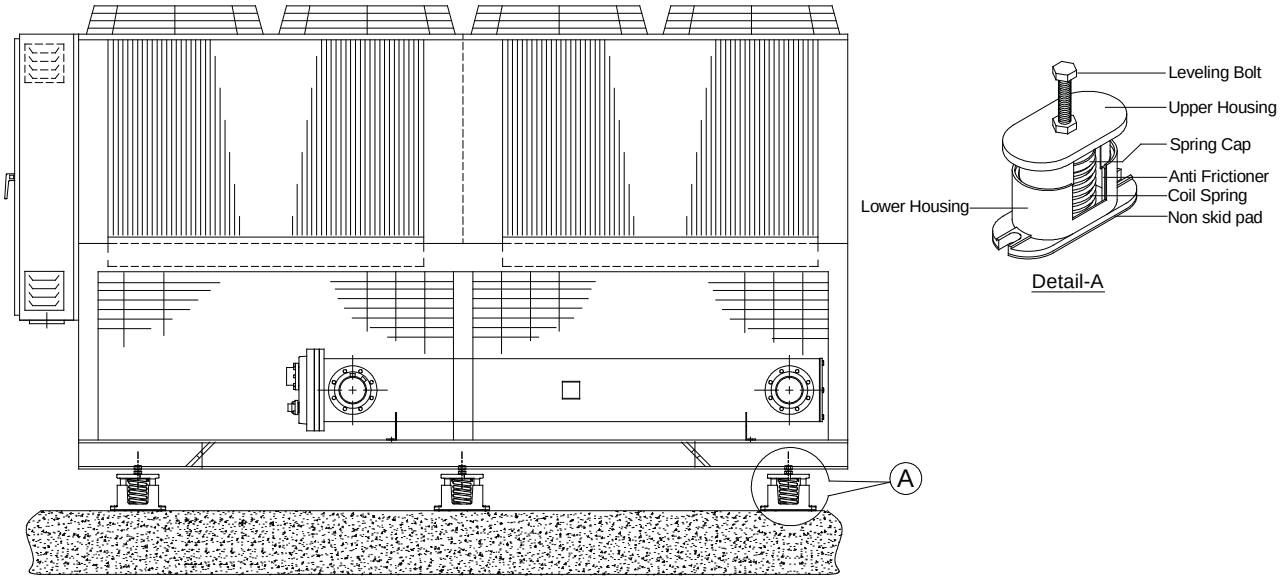

Note : SKM can supply CAVM Spring type Anti-vibration mounts (optional). The CAVM has a deflection of 25mm and each rated load can be distinguished easily as it is represented by different colours.

Water Loop Volume

In chilled water system, presence of sufficient volume of water in the piping system is crucial to achieve proper operation, unfortunately, some systems will run with less water volume than needed, this will result in inconsistence system operation, and uncontrolled compressor cycling, this condition is called " short water loop".

Installing the temperature control sensor in the supply water line (outlet) allows the application, for example a building, to act as a buffer to ensure a sufficient water volume will be in the evaporator loop to achieve stable controls.

If our building for example didn't provide enough water volume to achieve stable controls, a storage tank should be installed to increase the water volume.

In a standard air conditioning application, the tank should be sized to attain a 2 minute water loop, and 2.5 – 4 minute water loop for process cooling systems.

Having enough water loop time, hence enough water volume in the evaporator loop will prevent irregular compressor cycling, which means smoother operation.

Unit Sizing

It is strongly recommended to size the chiller for the present load. For future expansion, it is recommended to install another chiller to meet the additional load demand.

Over sizing of the chillers by more than 10% at design conditions must be avoided. Over sizing causes energy inefficiency (more power consumption), erratic system operation and shortened compressor life due to excessive cycling of compressors.

Multiple Chiller Operation

If the capacity requires installing more than one chiller unit or where standby units are desired, units should be of equal size (or near) to ensure balanced water flow.

SKM recommends that water flow supply & return are connected either parallel in case of range < 16°F (8.9°C) or in series if range > 16°F (8.9°C).

Low Ambient Operation

For efficient operation of packaged chiller during intermediate seasons, when temperatures may drop to 50°F (10°C), proper operation is controlled by the following :

Based on the high pressure, MCS cycles the required fans ON & OFF.

If unit operation is envisaged at ambients down to 25°F (-4°C), optional Low Ambient Operation kit should be used (option LAO).

This factory installed arrangement requires control valves, receiver and additional refrigerant charge to build up condensing pressure in condenser coil by flooding refrigerant at low ambient seasons operation. See optional features Page 7.

Specify option LAO when desired.

Corrosive Atmosphere

To protect condenser from corrosion in corrosive, saline, dusty and high humid atmosphere, it is recommended to use Pre - Coated Aluminum Fins as the coating offers a high resistance to corrosion and is designed to give maximum performance in severe and highly corrosive environments.

During laboratory testing, pre - coated aluminum passed a 1000 hour, 5% salt spray test at 95°F (35°C) temperature and 95% relative humidity, according to ASTM B - 117.

These pre - coated aluminum fins are recommended for use in off shore (saline and high humidity) environments, for installations in the desert, refineries, sewage treatment plants and other industrial applications.

Chilled Water Piping for Multiple Chiller Installation (With MCS)

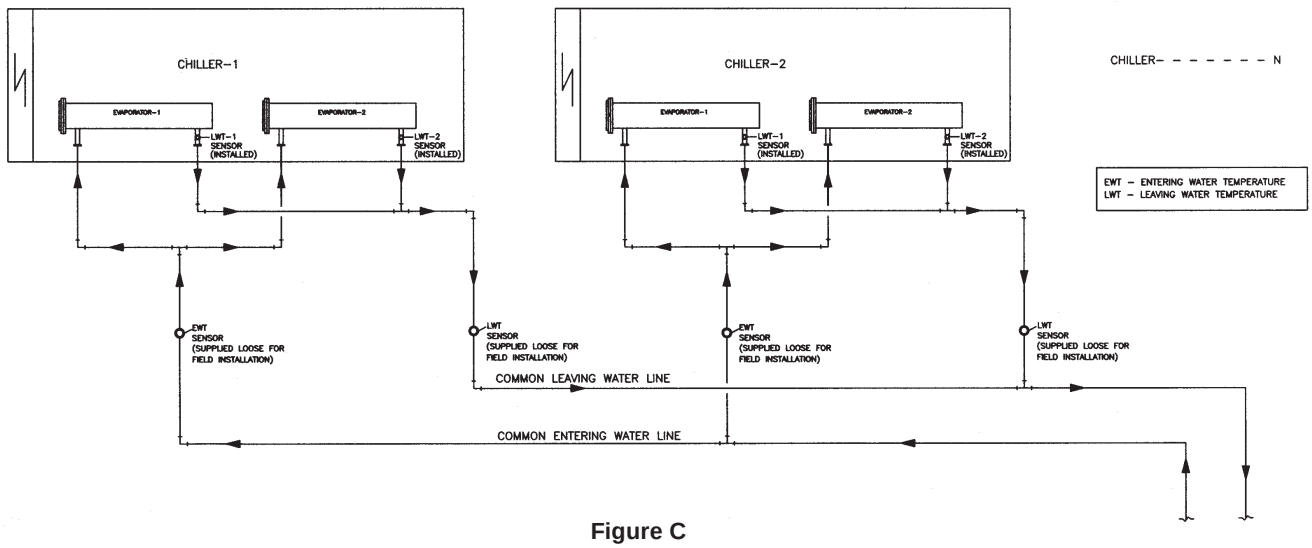

Figure C

For chillers with two evaporators, pipes for leaving and entering water, from one evaporator should be joined to the corresponding pipe from the other evaporator, before connecting to the main header of the installation.

GUIDE SPECIFICATIONS

GENERAL

The contractor shall supply and install factory assembled air-cooled packaged water chillers, the number and capacity of which shall be as indicated in the capacity schedule shown on the drawings.

Each machine shall consist of at least one refrigerating circuit comprising of semi hermetic reciprocating high efficiency compressor(s), air-cooled condenser, evaporator, interconnecting refrigerant piping, controls, safety devices and accessories.

The machine shall be factory assembled, leak tested, evacuated and completely charged with refrigerant R-134a. All factory wiring and piping shall be contained within the machine enclosure. All electrical components shall be protected from the weather.

Air cooled chillers shall be rated in accordance with AHRI-550/590. Each machine shall be capable of operating satisfactorily in a wide range of ambient air temperatures ranging from 40°F (4°C) to 140°F (60 °C).

Unless indicated otherwise on electrical wiring diagram, each unit shall be factory equipped to connect to only one electrical power feeder with the necessary circuit breakers in the field.

Each unit shall be mounted on anti vibration isolators flexible enough to dampen any vibrations.

COMPRESSOR(S)

Compressors used in air cooled packaged chillers shall be of high efficiency and fully accessible semi-hermetic reciprocating type with discus valve design. The compressor shall be equipped with crankcase heater, reversible oil pump, refrigerant gas cooled electric motor, preset internal relief valve, inherent thermistor motor protection, suction and discharge service valves, oil sight glass. Compressors shall be mounted on anti-vibration mounts to minimize vibration transmission. All compressors shall be provided with an individual 3 pole MCCB for short circuit protection & Isolation in case it is required. Individual 3 pole contactors for switching of the compressors shall be rated for AC3 duty.

EVAPORATOR

All the evaporators shall be shell and tube, direct expansion, removable head and having 1, 2, and 3 refrigerant circuits. Evaporator shell, header, tubesheet, refrigerant and water connections shall be made of carbon steel. Baffels shall be provided in the waterflow to increase the heat transfer effeciency. High efficiency tubes in copper. Evaporators shall be provided with drain and vent plugs. Shell and tube evaporator design and material specifications, the assembly process shall be in compliance with the following codes: CE, GOST, UDT and ASME Standards.

Maximum working pressure of waterside shall be 145 psig (1000 kPa) and for refrigerant side shall be 363 psig (2500 kPa).

All evaporators shall be insulated with 1" (25mm) thick flexible closed cell insulation, having K factor of 0.26 Btu.in/ft^2.hr.°F (0.038 W/m.^{o}K).

CONDENSER COIL

Condenser coil shall be air cooled and shall be constructed of seamless copper tubes, maximum 4 rows deep, 3/8" (9.52 mm) O.D. and mechanically bonded to the wavy type aluminum fins.

Fins spacing shall be maximum 12 fpi (2.1mm). Slit fins shall not be accepted. Precoated fins or Aeris coil coating (based on application) shall be used for saline and corrosive environment.

Integral sub cooling circuit in each coil shall be provided to increase the chiller cooling capacity, without additional operating cost.

The coils shall be tested against leakage by air pressure of 450 psig (3100 Kpa) under water.

CONDENSER FANS & MOTORS

The machine shall be furnished with direct driven propeller type discharging air upward condenser fans. Fans shall be constructed of corrosion resistant blades such as heavy gauge aluminum. The fan and drive shall be held in proper alignment. Fan assemblies shall be provided with heavy gauge, rust resistant steel. The fan assembly shall be protected with an acrylic coated steel wire fan guard. All condenser fans shall be individually statically and dynamically balanced for vibration free operation.

Condenser fan motor shall be Totally Enclosed Air Over (TEAO), 3-phase type, 6 poles with Class F insulation, Class B temperature rise and IP55 protection. Also, Motor shall be with permanently lubricated bearings and inherent corrosion resistance shaft. Condenser fan motors shall be provided with individual 3 pole contactor rated for AC3 duty operation and motor protector circuit breakers provided for overload, short circuit protection and isolation.

REFRIGERATION CIRCUITS

Refrigeration circuits piping shall be fabricated from ACR grade copper pipes and each refrigeration circuit shall include a removable core filter drier, liquid line solenoid valve, thermostatic expansion valve, shut of valve, sight glass and hot gas muffler. For single compressor circuits, vibration absorbers on suction and discharge lines shall be provided.

Suction line shall be insulated with ½" (13mm) wall thickness closed cell pipe insulation with maximum k factor 0.26 Btu.in/ft^2. hr.^{o}F (0.04 W/m .^{o}K).

GUIDE SPECIFICATIONS

CASING

Machine casing shall be made of heavy gauge zinc coated galvanized steel sheets conforming to JIS-G 3302 and ASTM-A 635. To provide an extremely tough, scratch resistance, excellent anticorrosive protection, fabricated steel shall be thoroughly de-greased and then phosphatized before application of an average 60 micron backed electrostatic polyester dry powder coating in RAL 7032 color scheme. This finish shall pass 1000-hour, 5% salt spray test at 95 °F (35 °C) and 95% relative humidity (ASTM B 117).

Machine casing shall be provided with access doors for easy service and maintenance and painted steel wire guard for compressors section.

The machine shall be fully assembled on welded rigid structural steel skid painted with one coat primer and minimum one coat of rust-preventing black enamel.

CONTROL PANEL & CONTROLS

The unit mounted chiller control panel enclosure shall be fabricated out of heavy gauge sheet steel in phosphatized powder coated baked finish. The enclosure shall conform to IP54 as per guidelines in IEC 529. A hinged access door and key-fastener shall be provided for easy access and security. The panel shall be factory wired in accordance with NEC 430 & 440, labeled, tagged and features 220V / 240V controls.

- Individual compressor and condenser fan motor contactors.
- Thermal magnetic circuit breakers for compressors and condenser fan motors.
- Circuit breaker for control circuit.
- Remote/Off/Local selector switch.
- Microprocessor master board with graphical display.
- Microprocessor expansion boards as required.
- Control Relays and control circuit fuses.
- Control circuit on/off switch and pump down switches.
- Indication light for common fault.
- Volt free contacts for run, common fault and auto mode indications.
- Provision for accepting volt free contact for remote start/stop.
- Control terminal blocks and power terminal blocks/bus bars.

Microprocessor control system shall be provided for the chiller as a standard feature. The controller shall provide flexibility with set points and control options that can be selected prior to commissioning a system or when the unit is live and functioning. The microprocessor shall provide a complete operational control for the chiller and shall have built-in auto diagnostic capability that can signal off normal operation or alarm conditions as well as shutting down the chiller.

The Main Features of Controller shall be as follows:

A large graphical LCD Display with back-lit that can be seen in bright or dim lighting.

- A nine button generic keypad.
- Battery backed up built in real time clock to program the chiller for 2 starts and 2 stops daily to provide the information about the running hours of the compressors.
- Multiple authorization levels to provide tight security of the control system.
- Two operating schedules per each day of the week and 8 holidays.
- Automatic Lead/Lag changeover of the compressors.
- Pump-down at the beginning and end of every circuit cycle.
- Capacity control based on leaving chilled water temperature.
- Start/stop facility from remote through Volt Free Contact (VFC)
- Common Run, Fault and remote mode operation status volt free contacts provided for remote signaling.

Easy Accessible Measurements shall include the following:

- Status of the chiller.
- Status of each circuit/compressor.
- Status of condenser fans.
- Leaving and Entering chilled water temperature.
- Suction pressure for each refrigerant circuit.
- Discharge pressure for each refrigerant circuit.
- Oil pressure for each compressor.
- Ampere draw for each compressor.
- Ambient temperature.
- All active set points.

- Run time for each compressor.
- Number of compressor starts.
- Lockout and alarm status.
- Status of water flow switch, compressor internal motor protector, run/stop input and pump down switches.
- Log of last 100 alarms.
- Lead compressor identification.
- Date and time.
- Graphs of all inputs and outputs.

The following system protection controls shall automatically act to ensure system reliability and protection of the unit thru the microprocessor:

- Low suction pressure protection.
- High discharge pressure protection.
- Low discharge pressure protection.
- Low oil pressure protection.
- High compressor ampere protection.
- Compressor internal thermal protection.
- Freeze protection.
- Chilled water flow loss protection.
- Sensor error protection.
- Pump down.
- Anti-recycle.
- Time delay between stages.
- 4-Levels of passwords to restrict the intentional mishandling.

The controller shall support the major BMS protocols such as BACnet, Modbus & LON.

AIR CONDITIONING EQUIPMENT

HEAD OFFICE

P.O Box: 6004
Sharjah, United Arab Emirates
Tel: +971 6 5347347
Fax: +971 6 5349292
Email: sales@skm.ae

Spare Parts Division

Sharjah, United Arab Emirates
Tel: +971 6 5347347
Fax: +971 6 5349292
Email: spareparts@skm.ae

Service Centre

Sharjah, United Arab Emirates
Tel: +971 6 5347347
Fax: +971 6 5349292
Email: aftersales@skm.ae

REGIONAL OFFICES

UAE

Abu Dhabi P.O Box: 27788
Abu Dhabi, United Arab Emirates
Tel: +971 2 6445223
Fax: +971 2 6445145
Email: abudhabisales@skm.ae

Al Ain Al Ain, United Arab Emirates
Tel: +971 3 7619921
Fax: +971 3 7619941
Email: alainsales@skm.ae

Dubai P.O Box: 98822
Dubai, United Arab Emirates
Tel: +971 4 2940900
Fax: +971 4 2940029
Email: dubaisales@skm.ae

Kuwait

P.O Box: 1215-PC 15463
Dasman, Kuwait
Tel: +965 2 2492200
Fax: +965 2 2494400
Email: kuwaitsales@skm.ae

Saudi Arabia

AL Messila HVAC Equipment Factory
(Part of SKM A/C factory in
Saudi Arabia)
Saudi Arabia, Eastern provenance
AD Dammam
2nd industrial city
Abqiq main road Hail Street
Tel: +966 13 8123332/ 4 / 5
Fax: +966 13 8123337/+96613 8123092

Egypt

9 Mosadak Street,
3rd floor, Dokki, Giza, Egypt
Tel: +20 2 37619617 / +20 2 37621974
Fax: +20 2 37621973
Email: egyptsales@skm.ae

Algeria

Aissat Idir (EX-ENMA) City
Bldg1, Flat 2, Dar El Beida Algiers,
Algeria
Tel: +213 21 508197
Fax: +213 21 508197
Email: algeriasales@skm.ae

DISTRIBUTORS

Saudi Arabia

mdaqqa@fawaz.com

Dammam
Fawaz Ref. & Air Conditioning Co.
P.O Box: 1189
Al Khobar, Saudi Arabia
Tel: +966 13 8598666
Fax: +966 13 8598520
Email: abarbarawi@fawaz.com

Jeddah
Fawaz Ref. & Air Conditioning Co.
P.O Box: 13218
Jeddah, Saudi Arabia
Tel: +966 12 6675704
Fax: +966 12 6608316
Email: jrabdu@fawaz.com

Riyadh
Fawaz Ref. & Air Conditioning Co.
P.O Box: 85123
Riyadh, Saudi Arabia
Tel: +966 11 4794499
Fax: +966 11 4785354
Email: szaidan@fawaz.com

Jordan

Ideal A/C Systems Co. L.L.C
Al Gardenz Street, Building 111,
Al Bakri Complex
P.O Box 5502 Amman, Jordan 11953
Tel: +962 6 5538640
Fax: +962 6 5538641
Email: tariq@idealac.com

Qatar

Mannai Trading Co. WLL
P.O Box: 76
Doha, Qatar
Tel: +974 4 4558787 / +974 4 4558788
Fax: +974 4 4558781
Email: dohasales@skm.ae
HVAC@mannai.com.qa

Iraq

Al Rawbitt Al Iraqia Co.
Erbil – Bagdad – Basra
Tel: +964 7507441111
+964 7711117776
+965 99608916
Email: info@alrawabitt.com

Kuwait (for Unitary Products Only)

British Link Kuwait (BLK)
P.O Box: 53054 Al Nuzha
Tel: +965 1820099
Fax: +965 22465005
Email: rawad@blk.com.kw

Forest (Global Distributor for
Minisplit, VRF & Window)
Head Office- Kuwait
Tel: +965 182 0099 - Ext 500
Fax: +965 2249 6197
Email: forest@forestunited.com
website: www.forestunited.com