ARI product diversity

Control

Control valves
STEVI®

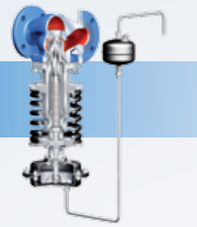

Pressure reducing valve
PREDU®

Excess pressure valve
PREDEX®

Temperature controller without auxiliary power TEMPTROL®

Isolation

Process valve
ZETRIX®

Butterfly valve
ZIVA®

Bellows valve
FABA®-Plus, FABA®-Supra I/C

Stop valves with gland seal
STOBU®

Safety

Safety valves (DIN)
SAFE

Safety valves (DIN)
SAFE P

Safety valves (API 526)
SAFE FN (Full nozzle)

Safety valves
SAFE TCP

Steam trapping

Steam traps (mechanical ball float / thermostatic / bimetallic and membrane / thermodynamic)
CONA®

Manifolds
CODI®

Steam trap with multi-valving technology (incl. stop valve, strainer, check valve, drain valve)
CONA® "All-in-One"

Steam trap with monitoring system
CONA®-Control

Profit from diversity made by ARI.
Please don't hesitate to ask for more information!

ARI ARMATUREN

www.ari-armaturen.com

Edition 03/2013 - Data subject to alteration

Triple offset design — Metal seal — Self-aligning sealing ring:

NEW from ARI!

ZETRIX®

The ARI process valve

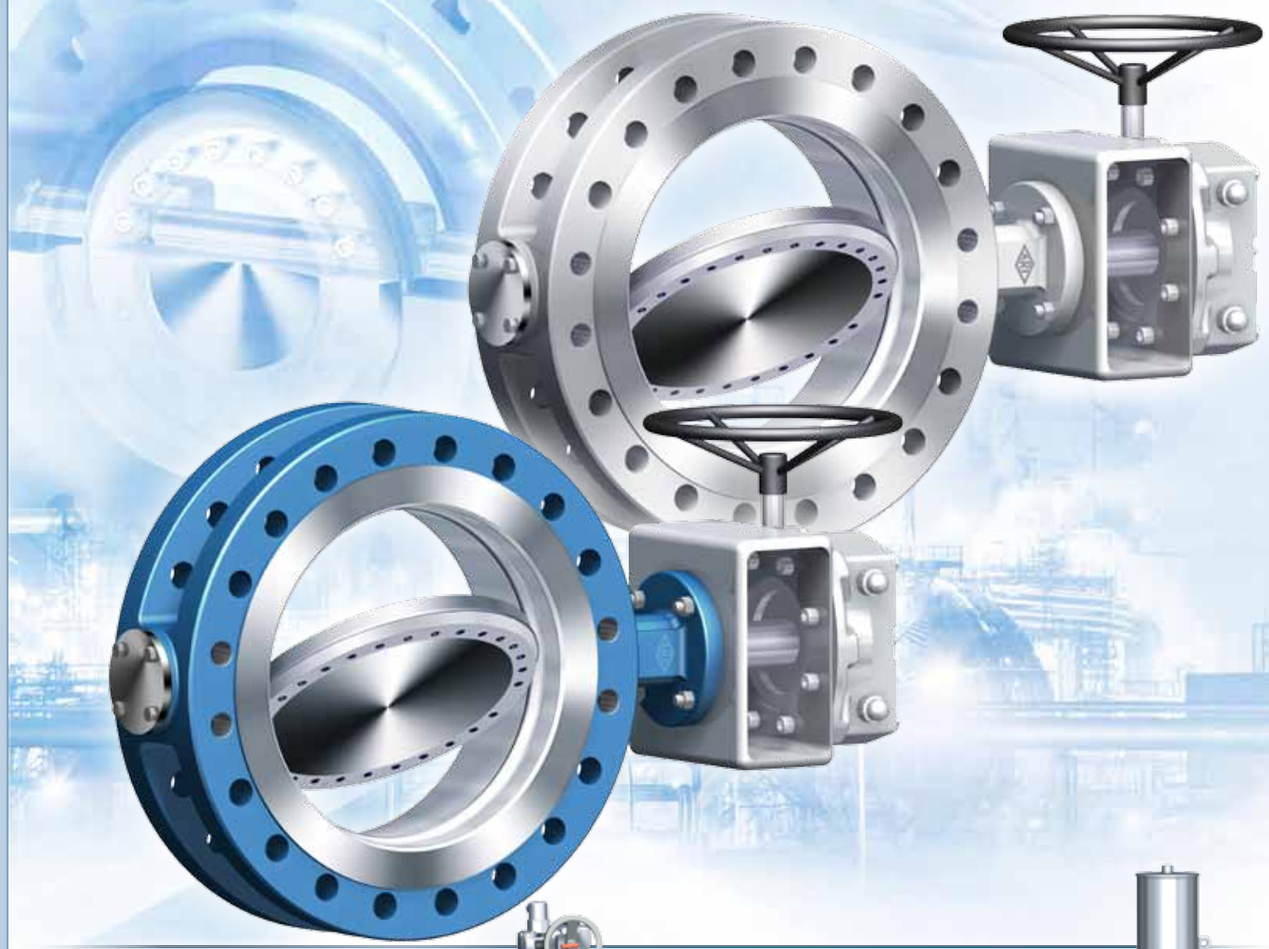

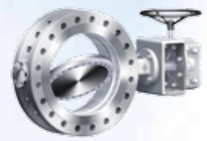

ZETRIX®
Manual

ZETRIX®
Electric actuator

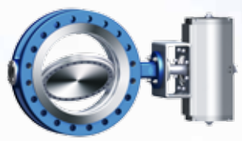

ZETRIX®
Pneumatic actuator

ZETRIX®
Hydraulic actuator

ARI ARMATUREN

Triple offset – for challenging applications!

‘What is triple offset’?

The rotating shaft of the disc is offset from the centre line of the disc seat and body seal (first offset) and the pipe’s centre line (second offset). With triple offset process valves, the seats axis of rotation is also asymmetrically disposed to the pipe axis.

Benefits for you

- Frictionless rotational movement
- Permanently leakproof by the metal seal principle
- Versatile applications with regard to media and temperature

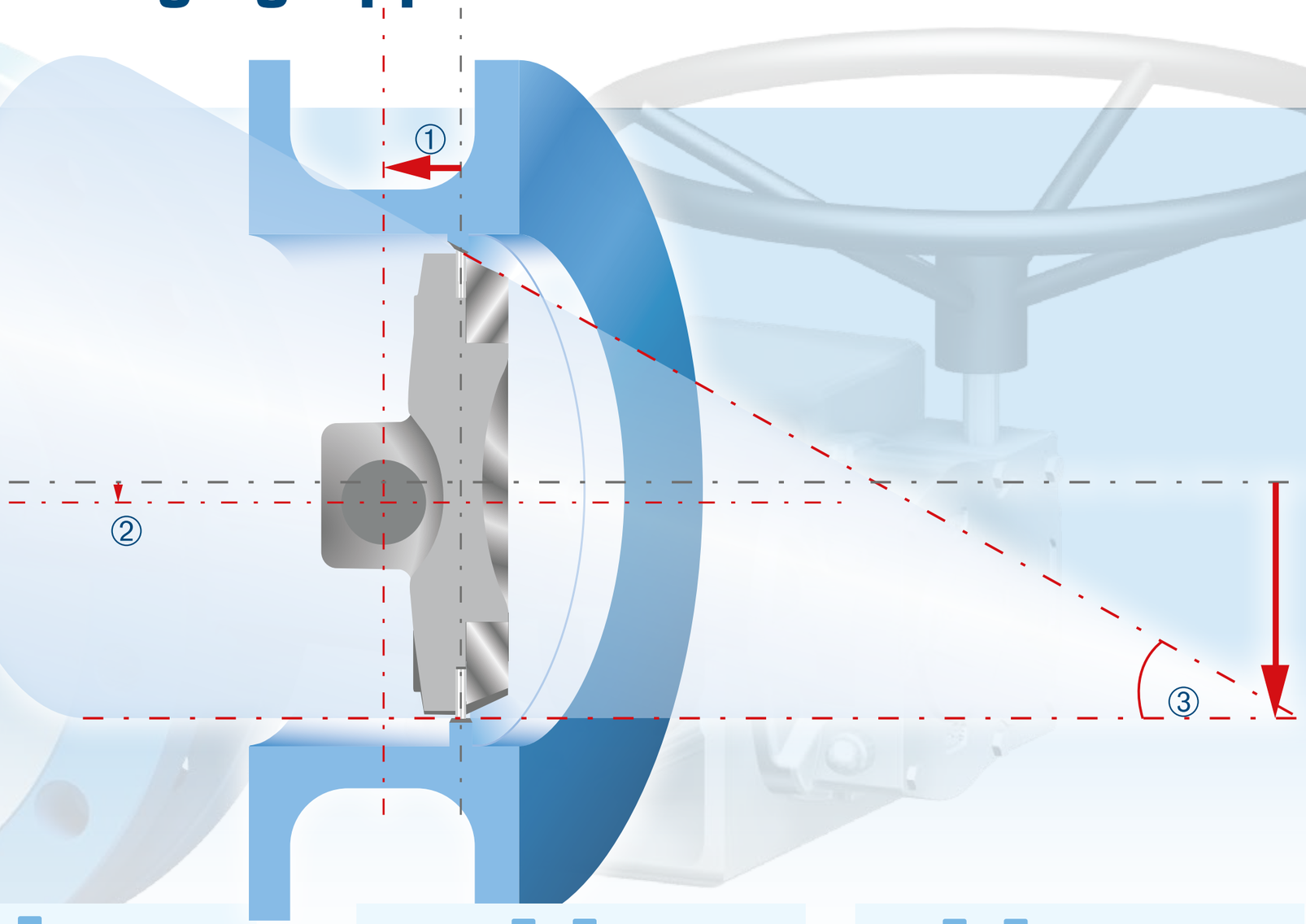

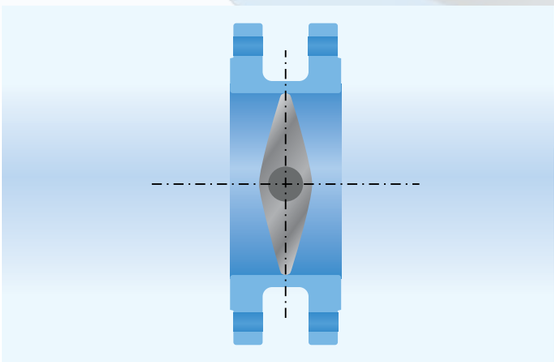

Centric disc design –
The pivot point is centrally disposed to both the seat and the pipe.

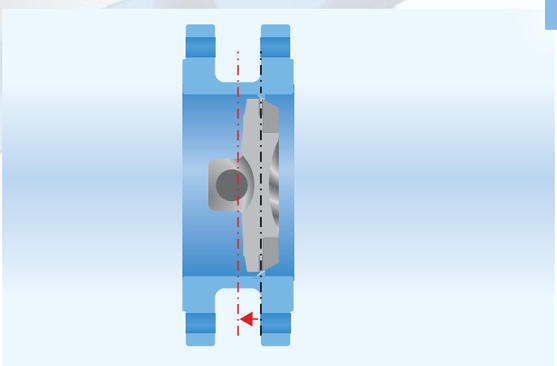

① First offset –
The rotating shaft of the disc is offset from the centre line of the disc seat and body seal.

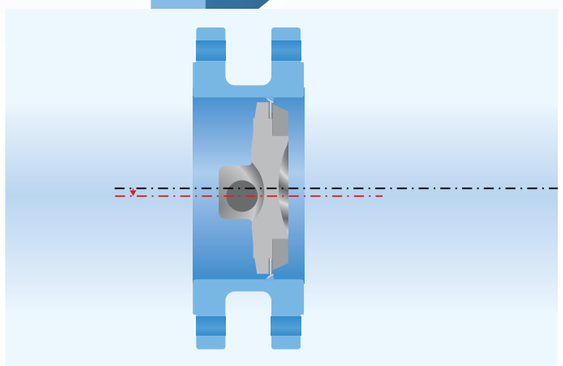

② Second offset –
The pivot point is also displaced from the pipe’s centre line.

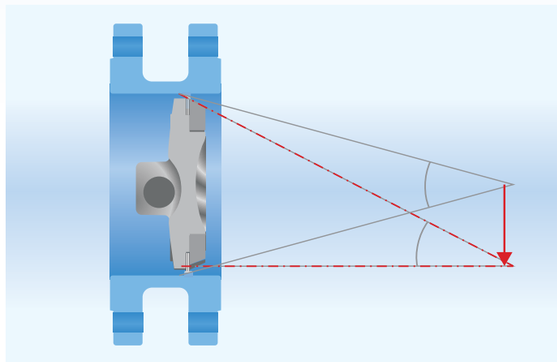

③ Third offset –
The seat’s axis of rotation is also asymmetrically disposed to the pipe axis.

The outcome: the ARI process valve!

ZETRIX®

Absolutely tight. Versatile. Durable. Safe.

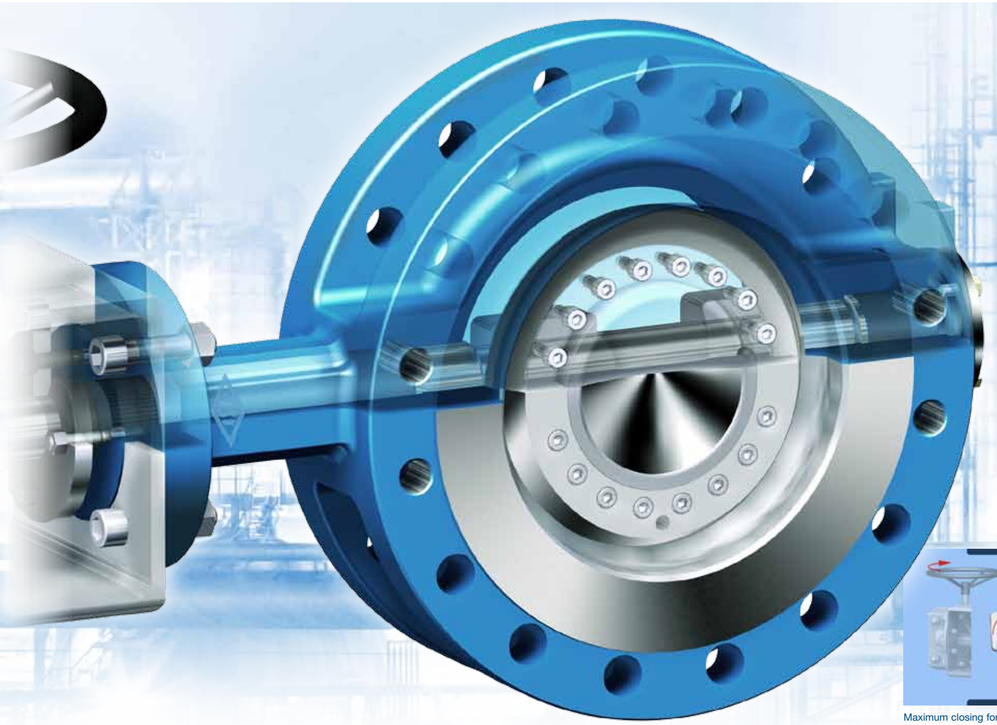

Maximum closing force with minimum effort because the contact angles are optimised with our special geometry optimisation software.

Self-aligning sealing ring facilitates thermal compensation and ensures leak-tightness regardless of temperature variations.

Lamellar structure made of stainless steel and graphite lends additional elasticity to the sealing ring. Double sealing mechanism in the form of a special, spiral-wound gasket made from a heat-resistant elastic material.

Triple offset design guarantees a frictionless rotary movement of the sealing ring into the seat.

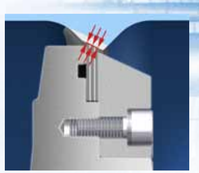

The ZETRIX® process valve seals according to the area seating principle; the required contact pressure is applied via the actuator, which can be switched off as a function of the torque.

The ZETRIX® process valve is extremely versatile. It can be used as a pipe-end valve on both sides. The bracket for mounting the actuator is defined according to ISO 5211. The extended bonnet allows insulation thicknesses in line with industrial standards.

Optimal durability because even the standard version has a stellited seat.

Reliably tight – even in harsh industrial environments …

- Due to the triple offset disc design (maximum closing force with minimum effort)
- Due to the “smart” sealing ring (uniform closing force, the ring is self-aligning and free-floating on the sealing surface)
- Due to the lamellar structure of the elastic, stainless steel / graphite sealing ring with its “W profile”
- Due to a wide range of additional safety options
- Due to the stellited seat (Stellite No. 21)
- Due to the metal seal principle
- Due to the top flange acc. to ISO 5211

Design

- Double flange body acc. to EN12516, EN ASME B16.34 and API 609
- Tight metal shut-off
- Triple offset sealing geometry
- Flexible, self-aligning, lamellar metal sealing ring (floating)
- Optimised characteristic permits shut-off and control function
- Extended bonnet suitable for pipe insulation from -100°C to +400°C
- Easy to automate due to the actuator interface incl. position indicator acc. to ISO 5211

Safety

- Tightness conforming to leakage rate A in accordance with EN 12266, API 598 and API 6D (bidirectional)
- Sealing ring protected against rotation
- Bearing protectors
- Blow-out protected stem
- Retaining ring and thrust bearing bolts locked
- Pressure-temperature profile acc. to EN 1092, ASME B16.34
- Approvals: TA-Luft, firesafe, SIL

Durability

- Long service life due to the stellited seat
- Rotary movement without wear or friction (seat and sealing ring) due to the optimised contact angles
- Hardened stainless steel bearings

Absolutely tight. Versatile. Durable. Safe.

Performance features at a glance:

- Design
  EN 12516, ASME B16.34, API 609
- Type of connection *
  Double flange acc. to EN 1092, ASME 16.5
- Nominal diameter *
  DN 150 to DN 600
- Nominal pressure *
  PN 10 to PN 40, Class 150, Class 300
- Face-to-face *
  DIN EN 558-1 Series 13
- Material *
  Cast-carbon steel (1.0619 +N; SA216WCB)
  Stainless steel (1.4408; SA351 CF8M)
- Temperature *
  -29°C to +427°C
- Flow media
  Liquids, gases, vapours
- Actuators
  Manual gearbox, pneumatic, electric, hydraulic drives
- Approvals
  TA-Luft, firesafe, SIL
- Typical applications
  Oil and gas processing, refineries, petrochemicals, chemicals, power plants, district heating, solar thermal power stations, pulp and paper, steelworks, sugar processing, industrial and plant manufacturing

* Other designs on request

Options:

- Flushing port for the shaft bearings and buffer port for protecting the stuffing box
- Flushing port for the bottom flange
- Welded bottom flange
- Double packing with drainage line (e.g. for thermal oil services)
- Test port
- “Clean air” bushing acc. to TA-Luft
- Solid sealing ring for special applications
- Heating jacket for high viscosity fluids
- Blow-out protection acc. to API 609

Modern development methods, tested in our own experimental lab

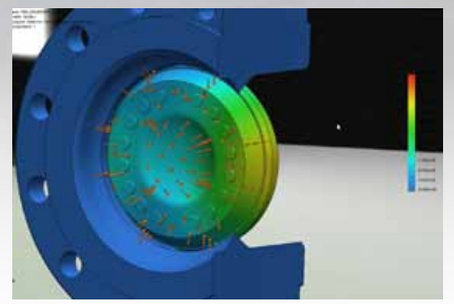

Finite element analysis
The finite element analysis (FEA) is a numerical calculation technique that was used to simulate the stresses and their distribution occurring in the ZETRIX® process valve. The aim was to achieve the required strength at pressure load levels in combination with an optimal weight and a flow friendly shape.

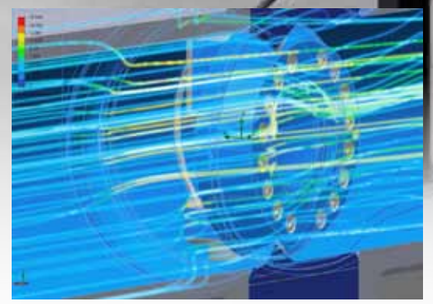

State-of-the-art flow simulations
The twofold objective of uniform flow and high flow capacity was realised with the aid of special flow software. The software simulations enable the flow velocity, flow direction and pressure distribution to be visualised. Due to the optimised ZETRIX® geometry, turbulences and pressure loss are reduced to a minimum.

Rigorous tests (here: firesafe)
“Firesafe” is a basic stipulation in many of the environments where the ZETRIX® process valve is used. As a triple offset 90° process valve with a tight metal seal, ZETRIX® meets all requirements before, during and after the fire. The test was performed according to ISO 10497.

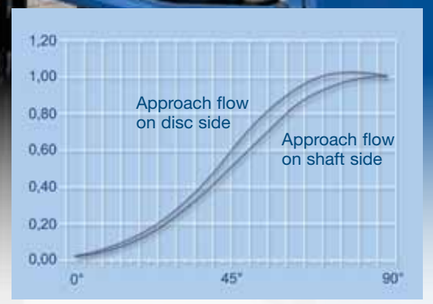

Characteristic measurements
The flow values at different opening angles were measured in an accredited testing laboratory. The resulting curves were used to determine the control characteristic of the ZETRIX® process valve.

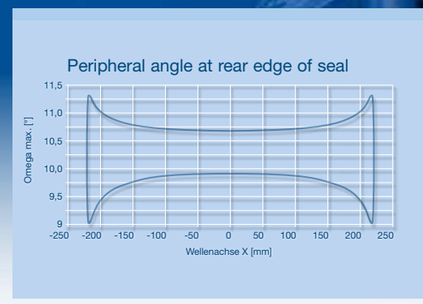

Contact angle calculation
The peripheral closing angle was optimised to ensure that the valve opens and closes without sticking and without friction. Our sizing software allows the contact angle at the perimeter of the ZETRIX® process valve seat to be visualised.

High-precision manufacturing

Modern technologies

are the key to optimal safety and reliability.

Our products are manufactured at three different locations – all of them in Germany – promptly and according to rigorous quality criteria.

High performance machining centres, automated assembly cells, programmable assembly robots and a highly qualified team of staff are vital prerequisites of top-quality product solutions specially tailored to your individual requirements.

The benefit for you: Optimal reliability and efficiency.

The valve bodies are manufactured on fully automated, CNC controlled machining centres. Our CNC programs are written on the basis of CAD data and transferred to the control online. The workpieces are clamped in specially designed fixtures that guarantee maximum machining stability and short set-up times.

The sealing surface is coated with stellite by a fully automatic welding robot with an integrated measuring system. All CNC programs are developed by our expert in-house programmers. Synchronising the eight axes of the welding system represents a particularly daunting challenge.

The three-dimensional measuring system allows the process valves to be compared with 3D data, which is subsequently evaluated and saved on a PC. The measurements are carried out directly in the machine to ensure reliable production processes.

Every ZETRIX® process valve is leak-tested according to DIN EN 12266. The test pressures and times are stored on our computer aided test bench. Special tests can also be performed at the customer's request.

Your strong partner – in more than 50 countries worldwide

For control – isolation – safety – steam trapping – application technology.

Technology is our life

Highly qualified ARI engineers develop products for tomorrow's world using the very latest techniques. Our suppliers are selected according to the strictest possible criteria, to ensure that only premium quality materials are used. Our state-of-the-art production technologies leave no room for mistakes.

Thanks to our dense sales network, expert advice is available from a sales partner close to you in more than 50 countries worldwide as well as from ARI branches in Austria, Denmark, the UK, France, Spain, Italy, the USA, China, Malaysia, Singapore, Indonesia, Russia and Dubai.

Are you a professional user of high-quality, heavy-duty valves? Would you like to reap the benefits of a strong partner? Our mission is to help you maximise your profit.

Tailor-made solutions

10,000 products in more than 100,000 variants mean almost unlimited possibilities depending on your application, with solutions specially tailored to your individual requirements. Control valves, pressure reducing valves, pressure regulators, temperature controllers without auxiliary power, butterfly valves, globe valves, safety valves, steam traps, measuring technologies and accessories such as pressure reducing stations, heat exchangers and condensate return systems – your key to maximum flexibility and efficiency.

Quality that pays off

Our continuous quality monitoring throughout all phases of the production process is documented in some twenty system approvals from acceptance bodies and classification societies like Det Norske Veritas, Lloyd's Register Quality Assurance, German Lloyd, SELO (China), CCS (China), the Korean Register, the Russian Maritime Register of Shipping, Rostechnadzor (Russia) and many more.

Quality made by ARI – your key to reliability, durability and guaranteed safety.