ART PLASMA
SX Series
Ver. 3

SERVICE MANUAL

Advanced Robotic Technology

Advanced Robotic Technology

57 Trade St.
Lytton 4178
Brisbane
Queensland

www.advancedrobotic.com
service@advancedrobotic.com
Phone 617 3393 6555
Fax 617 3393 5355

Warning
Genuine ART parts are the factory recommended replacement parts for your CNC machine. Any damage caused by the use of other than genuine ART parts may not be covered by the ART warranty.

You are responsible for the safe use of the product. Art does not and cannot make any guarantee or warranty regarding the safe use of the machine in your environment.

General
ART warrants that its product shall be free from defects in materials and workmanship.

CONTENTS

Section 1

Safety

Section 2

Functional Description of Machine Operation

Section 3

Maintenance

Appendix A

RECOGNISE SAFETY INFORMATION

When you see a safety symbol on the machine, understand the potential for personal injury, and follow the related instructions to avoid the hazard.

The symbol shown in this section are use to identify potential hazards. When you see a safety symbol in this manual or on your machine, understand the potential for personal injury, and follow related instructions to avoid the hazards.

FOLLOW SAFETY INSTRUSTIONS

- Read the manual safety messages and safety labels on your machine carefully.
- Always keep the machine label in good and clear condition. Replace if it damage or missing.
- Learn how to operate and use the machine controls properly. Do not let anyone operate it without proper instruction or training.
- Keep machine in proper working condition. Unauthorized modifications to the machine may affect safety and machine service life.

DANGER WARNING CAUTION

- A single word DANGER or WARNING is used with a safety symbol. DANGER identifies the most serious hazards.
- DANGER and WARNING safety labels are located on the machine near specific hazards
- WARNING safety messages precede related instructions in this manual that may result in injury or death if not followed correctly.
- CAUTION safety message precedes related instructions in this manual that may result in damage to equipment of not followed correctly.

ELECTRIC SHOCK CAN KILL

Touching live electrical parts can cause a fatal shock or severe burn.

Plasma Machine operation

- Operating Plasma on the machine completes an electrical circuit between the torch and the machine deck. The machine deck and anything touching the deck are part of the electrical circuit.
- Do not touch the torch body, deck or the water in trough when machine is operation.

Electric Shock Prevention

- Wear insulated gloves and boots, and keep your body and clothing dry at all time.
- Do not stand, sit or lie on the table or any wet surface when using the plasma machine.
- Provided an isolation switch close to the power supply with properly sized fuses. This switch allows the operator to turn off the power supply.
- When using a water table, be sure that it is correctly connected to earth ground.
- Never operate the machine unless the power supply cover is in place. Exposed power supply connections present a severe electrical hazard. Inspect the input power cord frequently for damage or cracking of the cover. Replace a damage power cord immediately. Bare wiring can kill.
- Before checking, cleaning or servicing machine, disconnect the main power or unplug the power supply.
- Before removing any power supply or system enclosure cover, disconnect electrical input power. Wait for 5 minutes after disconnecting the main power to allow capacitors to discharge.

PLASMA CUTTING CAN CAUSE FIRE OR EXPLOSION

Fire Prevention

- Ensure the area is safe before doing any cutting. Always keep a fire extinguisher nearby.
- Remove all flammables away from the CNC machine,
- Quench hot metal or allow it to cool before handling or before letting it touch combustible materials.

Explosion Prevention

- Do not use the plasma system or the machine if explosive dust or vapors are present.
- Do not cut pressurized cylinders, pipes or any closed container.
- Do not cut a material that has combustible substance on it.

Explosion Hazard (Argon-Hydrogen and Methane)

Hydrogen and methane are flammable gases that present an explosion hazard. Keep flame away from cylinders and hoses that contain methane or hydrogen mixtures. Keep flames and sparks away from the torch when using methane or argon-hydrogen plasma.

PLASMA CUTTING CAN PRODUCE TOXIC FUMES

Cutting can produce toxic fumes and gases that deplete oxygen and cause injury or death.

- Keep the cutting area well ventilated or use the dust extractor provided from ART at all times.
- Do not cut in locations near degreasing, cleaning or spraying operations. The vapors from certain chlorinated solvent decompose to form phosgene gas when exposed to ultraviolet radiation.
- Do not cut metal coated or containing toxic materials such as zinc(galvanized), lead, cadmium or Beryllium, unless the area is well ventilated and the operator wears an air-supplied respirator. The coating and metals containing these elements can produce toxic fumes when cut.
- This product, when used for welding or cutting, produces fumes and gases which contain chemicals known to cause birth defects and, in some cases , cancer.

A PLASMA ARC CAN CAUSE INJURY AND BURNS

Plasma arc can cut anything instantly.

- Keep hand away from the torch tip when the plasma unit is on
- Do not hold metal near the cutting path.
- Never clean up the torch head when the plasma unit is on.

PLASMA ARC RAYS CAN BURN SKIN AND EYE

Plasmas produce intense visible and invisible (ultraviolet and infrared) rays that can burn skin and eyes,

- Use eye protection in accordance with applicable national or local codes.
- Wear eye protection (safety glasses or goggles with side shields, or a welding helmet) with appropriate lens to protect eyes from arc's radiation.
- Protect your skin by wearing gauntlet gloves, safety shoes and hat.
- Wear flame- retardant clothes to cover all exposed areas.
- Cuffless trousers to prevent entry of sparks and slag.

COMPRESSED GAS SAFETY

- Never lubricate cylinder valve or regulators.
- Always store bottles in an upright position.
- Always restrain the bottles with a chain to prevent movement or tipping.
- Oxygen and Fuel cylinders must be separated by 6 meters when in storage
- Storage rooms must be well ventilated, dry and away from heat.
- Storage facilities must be clearly signed with all the gases that are stored.
- All cylinders must be clearly marked with the contents.
- No cylinder should be painted with arbitrary colours
- A flame should never come into contact with the body of the cylinders.
- Never move a cylinder by rolling or dragging or when the regulator is in place.
- Avoid the possibility of the valve being damaged during moving.
- A suitable pressure regulating valve must be fitted when attaching the cylinder to any system.
- Check all connections to pressure regulators, manifolds, hoses, gauges, and relief valves for integrity and tightness.
- Gas bottles and fittings should only be handled by qualified or experienced staff.

LASER SAFETY

- Laser beams can Cause retinal damage and blindness
- Never look directly into the beam of the alignment laser. Place hand under it to check if the beam is on.
-
-

WARNINGS

	Electric Shock Can Kill - Turn off the power and the circuit breaker on the machine. Remove the power plug to ensure the machine is fully isolated form electric power. - Do not touch live electrical part! If power is require during servicing, use extreme caution while working on the machine. As a reminder, high voltage will cause injury or death. - Do not attempt to repair any power board.
	HOT PARTS CAN CAUSE SEVERE BURNS - Allow the power supply to discharge before servicing.
	MOVING BLADES CAN CASUE INJURY - Keeps hand away from moving parts.
	STATIC ELECTRICITY CAN DAMAGE CIRCUIT BOARDS - Put on a ground wrist strap before any circuit board handling is performed.

CNC Table Specifications

POWER SUPPLY		
Max.	250Volts AC	50Hz
Max. Current	6 Amps	
MECHANICAL		
Weight	Depends on length and configuration of the machine	
	Approximately 3,000 Kg	
Frame Size	Length	5046mm
	Width	2975mm
Work Area	X	4020mm
	Y	2500mm
Gantry length		3507mm
Travel Speed	X, Y max	24,000mm/Min
	Z Max	7,500mm/Min
Paint Colours	Frame	Hammer tone AS Powder coating
	Panels	Yellow /Gold powder coating
	Brackets	
Computer Operating system		Windows XP
		Wireless connectivity
		15 inch Touch screen LCD Display
		Serial RS422 communication with CNC table
Motion Control		PMAC running G code files

Note: See Hypertherm manual for plasma unit specifications

Section 2

Functional description of machine operation

Power Supply

The CNC table is powered from a standard 10 amp 240 Volt AC power point.
There is a UPS (uninterruptible power supply) inside the machine which is used to filter the power for the computer and motion control electronics. It is wired so that when the isolation switch is turned off the input power and the load on the UPS is removed. The UPS is programmed to shut down after a short period under this condition.
If the mains supply should fail, the electronics will continue to operate on the UPS but it is recommended to shut the system down normally before the battery supply on the UPS fails and causes possible corruption of the operating system of the PC.

General Functionality

The ART Plasma CNC table has at the heart of its operation a specialized motion control computer (PMAC) which is fed data files, in the form of G code, from an industrial touch screen operated PC. This communicates on Com port 1 normally.
The PC communicates with the PMAC via an RS422 serial cable running through the X cable chain of the machine.
The pendant is a serial Display/Keyboard which also communicates with the PC through its own RS422 cable directly to COM Port 2. The only connection the pendant has to the CNC table is 5 Volts DC supply interfaced at the intermediate connection on the PMAC panel.

The PMAC gathers input data from the motor encoders and various switches and sensors and sends output data to the machine's solenoids, laser, printer and other output devices via, up to 4, serial RS422 channels. These serial data channels terminate at Mini I/O PCBs. There can be up to 3 Mini I/O circuits, or 1 Mini I/O circuit plus 1 analogue circuit board at the end of each channel. Each channel must end with an analogue PCB or terminator plug for stable data, including any unused channel.

The Mini I/O PCBs have isolated 24 volt power for all inputs and outputs as these are optically isolated.
The PMAC with its 5 to 8 break-out board and expansion cards has its own 5 Volt DC supply, as it is optically isolated from the PC (by the RS422 Com. Board), the Data channels (by the serial I/O boards) and the motor PWM driver boards (by the PWM interface boards).

Emergency Stop (E-STOP)

The E-Stop circuit is a completely electrically isolated from the electronic control circuits of the cnc table. This system has two interfaces to the machine.
The E-Stop circuit monitors the emergency stop buttons and light curtains (if fitted) and these inputs trigger the safety timer. After the preset time (settable on the timer module), the timer module deactivates the Motor power circuit via the isolating contactors and outputs an optically isolated signal to the channel1 Mini I/O PCB to inform the PMAC and PC that an E-Stop has occurred.

Each E-Stop button and light curtains have a separate instantaneous circuit as part of the PMAC's I/O to allow the PC to instruct an orderly shut down of the motors. If the system for any reason fails to see those signals the Safety relay will force the power off regardless.
The torch break away switch is monitored directly by the PMAC only and will inform the PC of an emergency stop in that case.

Plasma Connections

The Hypertherm Plasma unit has only 4 connections to the CNC table.
The analogue plasma voltage is fed back to the analogue board via a filter and voltage divider PCB which has a division ratio of 50:1.
The CNC table is held to Earth potential with a ground stake near the earth block on the machine's corner. This Earth block is the Star point for all earth leads on the machine and to the Plasma power supply. The Plasma power unit actually makes the table frame + DC relative to the torch potential which swings negative relative to ground.
The other 2 connections to the table electronics are the optically isolated signals, the CUT signal from the CNC to the plasma and the RTG (ready to go) signal back from the plasma to instruct the PMAC that a pierce is successful and cutting motion can proceed.
All other plasma related wiring, the torch lead and gas solenoid control wires, have no connection to the electrical system of the CNC.

Motor, axis and direction convention

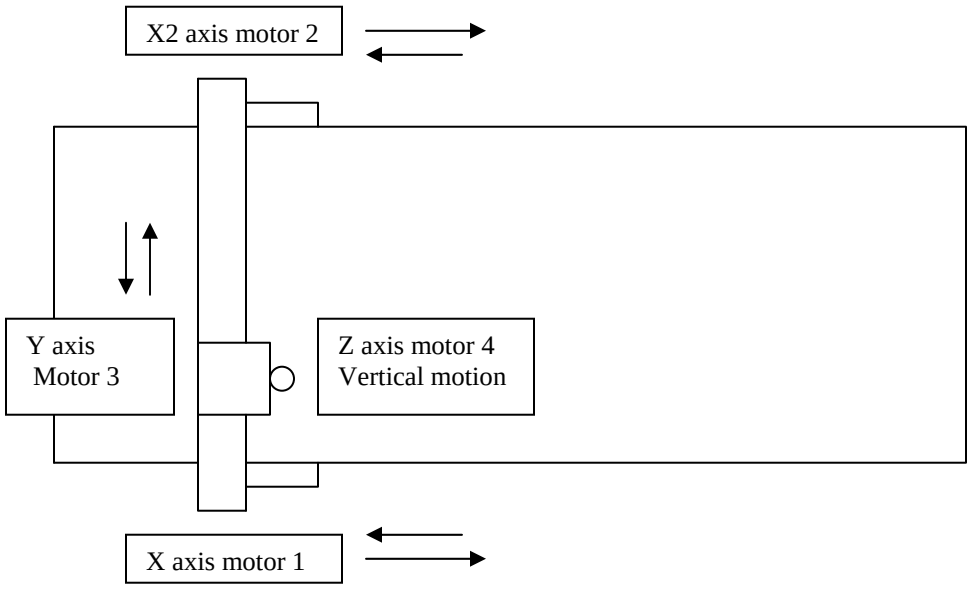

Sequence of Operation

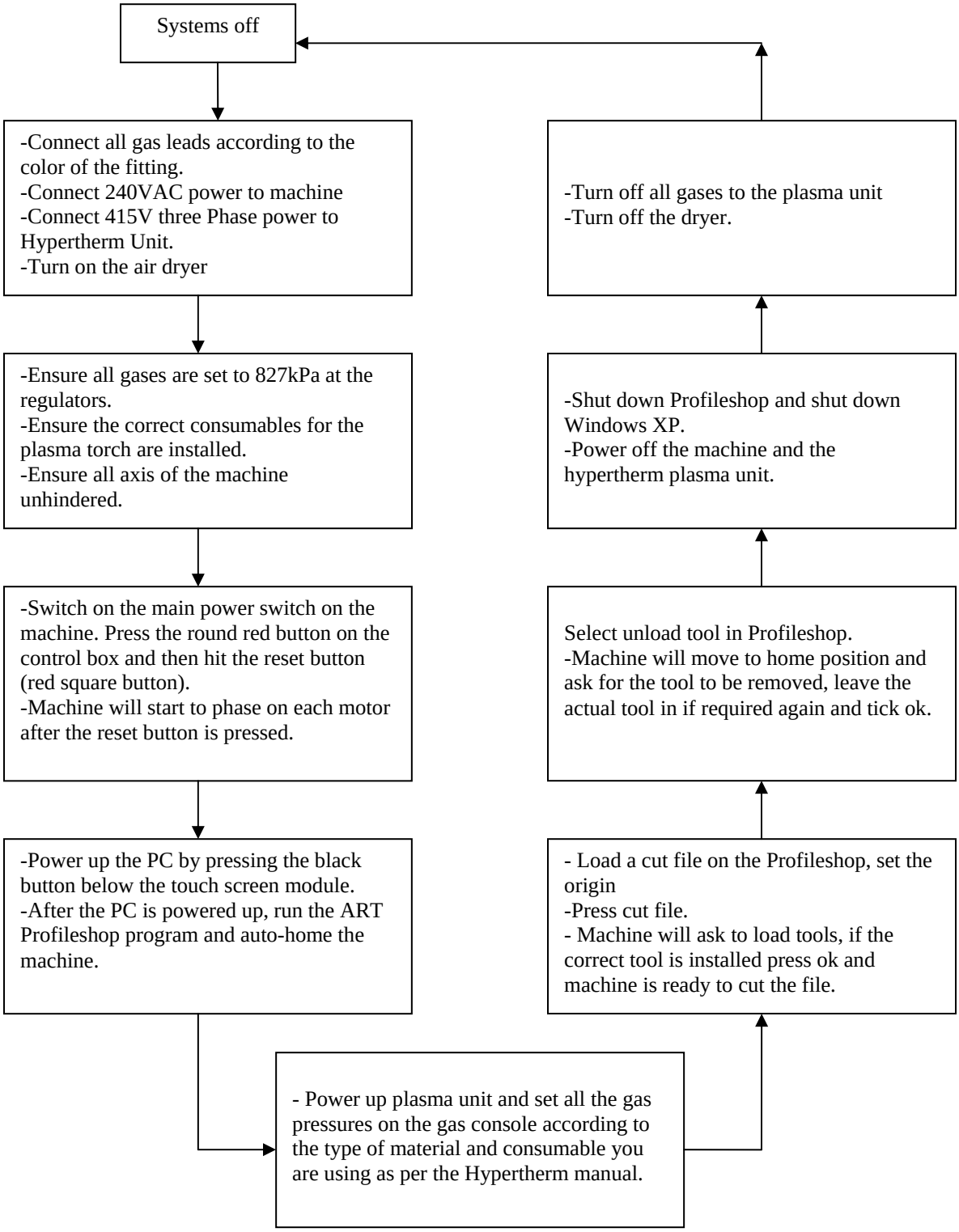

Troubleshooting

WARNING
This machine has LETHAL voltages at various positions inside the covers. If in doubt, consult ART or your electrician. Observe all your company safety procedures before continuing.

The complexity of the circuitry on the machine may require a qualified technician to service it at the component level.
If any unsolvable problem occurs during troubleshooting, please ring ART and speak to the technical support help desk.

Troubleshooting Procedure.

1. Electrically isolate the machine
2. Perform visual check on the machine parts where the problems occurring
3. Perform visual checks on the external and then the internal systems.
4. Check and ensure all connections on the cabling are tight.
5. Make sure that all mechanical parts look correct and move smoothly.
6. Replace faulty parts.
7. Power on the machine and test again
8. If a fault persists, please refer to Trouble shooting Chart for more information.
9. ART's service department has telephone assistance during normal office hours.

Visual Check

1. Switch off machine main power.
2. Remove machine control box cover which located at the back of the machine's gantry (or on the end of the table frame on earlier plasma tables). Visually check all devices inside the control box, especially on the circuit boards. Ensure there is no burn or char marks, no burning smell, discolouration, lose connection etc. Replace the part if necessary.
3. Ensure no mechanical parts are loose, dismounted, broken etc. Replace or repair if necessary.
4. Perform some general cleaning if applicable, e.g. filters and covers.

Troubleshooting Chart

Warning: Never remove or replace cables, connectors or circuit boards while the machine is powered up. Doing so could result in serious damage to the machine or injury to personnel.

Problem	Symptom	Solution
Motor amplifier fault or fatal following error Motor 1 – X1 Motor 2 – X2 Motor 3 – Y Motor 4 – Z Motor 5 – W Motor 6 – A *Fatal following error* refers to the said motor not getting to its target position according to the feedback from the encoder. *Amplifier error* refers to an overload on a particular motor.	Machine stopped jogging or unable to jog properly. Machine stops in the middle of an operation due to a mechanical jam or overload. Electrical noise in the data between Mini I/O boards and Pmac due to faulty cables or bad earthing on cables	
		Ensure machine is free to move by hand after all motors are disabled using the "Kill Motors" button. If not, remove machine covers and check motor gear boxes. Ensure all mechanical parts are in good condition and tensioned correctly.
		Ensure all motors are free to move. Ensure all toothed racks are clean and free from swarf. Perform general cleaning as needed.
		Ensure the motor encoder on the end of affected motor is not loose. Remove the encoder cover and ensure the encoder disc is sitting between the gaps of reader. If the disc is rubbing on the reader, first loosen the grub screw and reposition the disc, tighten it and re-phase the motor. *To re-phase the motor, please contact ART for further assistance.
		Disable the motors with the "Kills motors" button, check encoder feedback by logging in as a *technician*. **Note: *Technician mode*** can only be accessed with a special code obtainable from ART Service Department, select *setup*, *executive* then click *position*. Move each motor and ensure there no missing counts. Otherwise replace the encoder. Once replaced, the motor needs to be re-phased. This involves the use of 'Executive'.
		Check encoder cable is not loose on the connections at both ends (at the encoder and in the relevant mini I/O box).

		Turn off the machine and swap the PWM amplifier board from another motor drive. Power on and test the machine. If the original problem has moved to that motor where the original PWM board is used, then replace the PWM board. Try the same thing for the PWM interface board, then try the linking cables. If an X axis motor generates a fault, check the opposite axis for broken belt or jam. It may have stopped moving, causing an overload in the opposite motor. Check limit switches. Data cable problems leading out to the mini I/O boards can cause missing encoder counts. Look for loose connections in plugs or broken wires.
X, Y or Z stops moving while autohoming	Machine lost it home position	Check that all limit switches on every axis are in good condition and not jammed or no shorts on the terminals. Depressing the switches by hand (or activating the proximity versions with metal) will result in a yellow LED lighting up on the relevant mini I/O board.
Machine unable to reset Emergency Stop (E-STOP) system	Open circuit button or Fault in circuit.	Ensure all E-STOP buttons are fully released. Ensure all the E/S loops are closed by checking the E/S breakout board. Use multimeter to check the resistance on each pair of cables to ensure the resistance is close to 0 ohms. If not, check each E-STOP button terminal to ensure the cable is not loose. Replace as necessary
Profileshop running in demo mode	PC unable to communicate with machine. **Note**: When the computer is communicating with the machine the dot on the touch screen pendant is flashing.	Ensure touch screen keyboard is not used while executing ART profileshop program.
		If Pewin Pro has been previously used and shut down, the process may have to be terminated by going into *Windows Task Manager (*press CNTRL + ALT + DEL). The process is called PMACSE~1.exe. Check the RS422 communications cable, ensure connections are tight.
		Measure the voltage across the red and black cables on the RS422-232 board is about 5Vdc + or – 0.1V. If not check the power supply and adjust if necessary. If yes then change the 232-422 board and reset the PC. If that is not the fault then check the RS422 board at the other end behind the Pmac panel.

Tool head inactive		Check *T/Head 1* button on the Task bar of ART Profileshop is Active (pushed in).
Torch fault active	Torch mount moved away from faceplate.	Ensure the plasma torch mounting plate is seated properly with no particles built up behind it, clean if necessary. Ensure the safety switch on the mounting plate is clicked in when the plate is in position. If yes ,check switch wiring
Torch pierces in the air after IHS is activated	IHS sensor being triggered early	Reduce the air flow to the cylinder to slow its movement by adjusting flow control valve on the exhaust. Clean up the surface of the proximity sensor if needed. Ensure the bracket that the sensor is mounted on does not jam or vibrate violently during sense procedure. Make sure the guide rod is straight and able to slide freely.
Plasma torch lifting up or dragging down onto work surface	AVC not working	Check the cutting voltage while the machine is cutting. Ensure that the voltage control is close to default setting and appropriate for the job. If there's a fixed high value on the screen then replace the analogue board.
		Check all cable connections on the channel 3 card 2 board (analogue board)
Plasma torch not arcing when machine ordered to cut	Plasma unit not getting cut signal from machine	Check that the plasma unit has not timed out. It may be necessary to restart the plasma unit. Use a multi-meter to measure voltage across the cable C340 or connection OUT 1 on the analogue board, ensure that 24V DC is sent out from the analogue board to the plasma machine when the "cut job" is requested. -If there is no 24V DC, check the input voltage for the analogue board by measuring voltage across CN1. Replace the 24Vdc power supply if needed. -Check the cable from the analogue board to the plasma machine to ensure there's no bad connections or broken cable. If the cable is OK, then check the plasma unit. Refer to the plasma service manual.
Machine only pierces without cutting	No RTG signal is received from plasma power supply.	Check whether there is a short across the cable on the IN1 on the analogue board. If yes, then replace the analogue board. If no, then check the cable and the connection on the plasma unit. If cable is OK, then run some diagnostic checks referred to in the hypertherm service manual.

Control PC Will Not Boot Up — No Movement	No display on screen and no fan running	Check that the power leads are plugged in and switched on. Check the workshop fuse-box/safety switches. Check the integrity of the data leads between the main box and the gantry. Check the pendant lead, an unplugged pendant can cause the PC to freeze up. Ensure that the host computer is turned on.
Inaccuracy in Cutting		Select 'AUTO HOME' from the MAIN MENU/ORIGIN MENU. Make sure that swarf is not restricting gantry carrier bearings or the rack and pinion gears. Check that the drive gears are clean from grit. Check that nothing inhibits the movement of the data chain. Check that your design program is set up for the ART profile cutter. Settings can be obtained from ART service personnel.
Cut Is Not Square or Is Not Meeting Up	Mechanical problem	Check the drive motor gear spring tension. Mark out a circle and a square on the material to check for accuracy. Measure the diagonals of the square and the diameter of the circle marked out on the material. If the diagonals are out then the machine needs to have the gantry squared up. Contact ART for details of the procedure.
Cuts Wrong — Does Not Cut According to the File	File not correct	Check the serial cable between the control console and the ART profile cutter. Check that the settings for the communication port used to send data to the machine have not been changed. Ask an ART service person. Ascertain whether all axes are moving normally. If not, contact an ART service person. Turn off the profile cutter, leave it turned off for a minute and then turn it back on. If this does not help, do the same to the touch screen PC which is sending the cut files to the machine. *Note: The machine will only cut what it is directed to cut, from the file. If the file has a fault the table will respond accordingly.*

		.
Machine Starts but Pendant Display or Buttons Do Not Work		Check that the pendant is plugged in. Replace the pendant lead. Turn off the profile cutter, leave it turned off for a minute, and then turn it back on. Reboot the Touch screen PC which is sending the cut files to the profile cutter. If none of the above works, contact an ART service person.

* For further information or troubleshooting regarding to the Hypertherm Plasma unit, please refer to the Hypertherm service manual. If there is an unsolvable problem, please fax a **Non Conformance Report** (**NCR**, of which a blank copy can be found in the back of this manual) and/or phone ART for Technical support.

SECTION 3

Maintenance

Daily

Clean bearing rails and racks if needed. Clean trough, remove any obstructions.

Weekly

Check for good earthing of the table, the earth stake may need watering in some dry installation locations

Monthly

Clean down machine,
Clean all linear rails. (*Do not blow air into the linear bearings*)
Clean out the dust from above the gantry bearings.
Clean trough
Remove covers from equipment fans and clean foam filters, make sure fans are operating

Check for squareness

Setup file of a large square 1200*1200. (Cut scrap)
Run file.
Or use the laser and mark a square with a pen on tape across the slats using measure-move. Measure diagonals, noting which diagonal is which.
If diagonals do not measure within 1mm, Call ART.

Grease machine.

See photo on page 2 for details
For machines with manual lubrication points, you should apply light grease to each grease nipple once per month. If your machine is in an extremely dirty environment it may be wise to increase the frequency of this process; however, you should discuss this with an ART service person before doing so.
On a standard gantry-style machine with a single head, there are normally thirteen grease points.
Lightly grease linear rail with INOX spray lubricant.

X Axis Grease Points

Four grease points are located on the X axis. Two of these are located at each end of the gantry along the silver guide rail: one at the front and one at the rear of each carriage mount.

Y Axis Grease Points

Four grease points are located on the Y axis. These are located on each side of the tool head along the silver guide rails: two on the home side and two on the offside.

Z Axis Grease Points

Four grease points are provided for the Z axis bearing rails. Use a flexible grease gun connection to reach the grease points positioned under the lower edge of the sliding face plate. However, on some machines the tooling does not permit access to some or all of these points. If this is the case on your machine, contact an ART service person.

Z-Screw Grease Point

Next to the Z bearing nipples

Check connectors.

Ensure all connectors are tight.

Annually

- Ensure all structural bolts are tightened properly.
- Check shielding on all cables for damage.
- Check Tension on gearbox pinion to rack, make sure there is at least 1mm of spacing in spring tension stopper between bracket and spring tube.
- Check all drive belts for tears cracks or shredding.
- Check for any sideways movement in the mounting of the gearbox pivot bearings.
- If the machine has a chain driven trough, check the tension on a the chain and adjust as necessary and oil the chain.

Grease Points

X Grease Nipples

Nipples Both sides of Table

Nipples Both sides of Tool Head

Y Grease Nipples

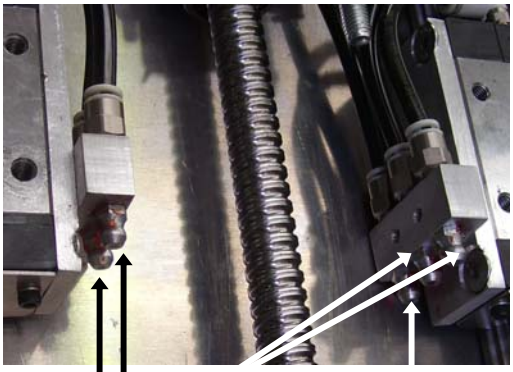

Z Bearing Grease Nipples

Z Ball Screw Grease Nipple

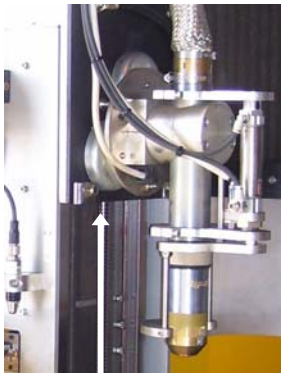

Position of Z Grease nipples under tool head face plate

Recommended Spares

Item	Tag/Order Number	Qty
PWM Amp	E439	2
PWM Interface	E440	2
FPGA Breakout	E436	1
5 - 8 Expansion	E437	1
Serial I/O Interface	E442	1
Mini Serial I/O	E441	2
Control Box 232-422	E715	1
Touch Screen 232-422	E716	1
422 Pendant Assembly	E443	1
Analogue I/O (Router)	E438	1
5V PCB Mount Switchmode Power Supply	E600	2
Servo Motor ready to install	N/A	1
Encoder	E696	2
Limit Switch with cable	C313	1
Control Box Power Switch	E516	1
Control Box Reset Switch	E426	1
Control Box Fuse 5Amp slow blow 3AG type	E498	5
UPS Fuse 6Amp slow blow 20x5mm	Local supply	5
Touch Screen Reset Switch	C261	1
Pendant Lead	C314	1
YZ Data Lead @ 6440	C315yz	1
Analogue Data Lead @14380	C315an	1
422 Serial Lead @26340	C270	1
Proximity Sensor @1000	C308	1
Hard Drive with Setup	N/A	1
ATX Motherboard with Memory	E477, E480	1
X, Y Gear Box Belt (HTD 525 5M 15)	M435	3

Z Gearbox Belt (HTD 375 5M 15)	M436	1
X, Y Pinion	M46	2
X, Y Motor Pulley	M439	1
Z Motor Pulley	M619	1
25mm Runner Block	M149	2
6200N Ballscrew Support Bearings Top	M27	2
3200B Ballscrew Support Bearings Bottom	M424	2

Plasma Channel 1 - Mini Serial I/O Board Configuration

Connection and Cable Numbers

Channel 1 Board 1 (X)

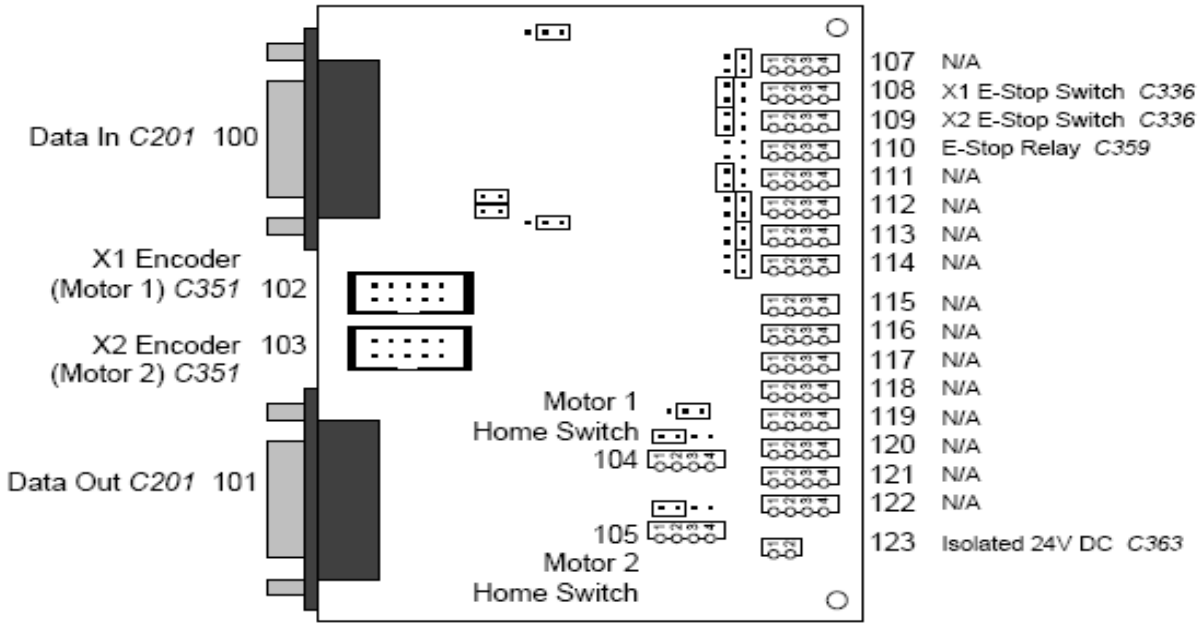

Channel 1 Board 2

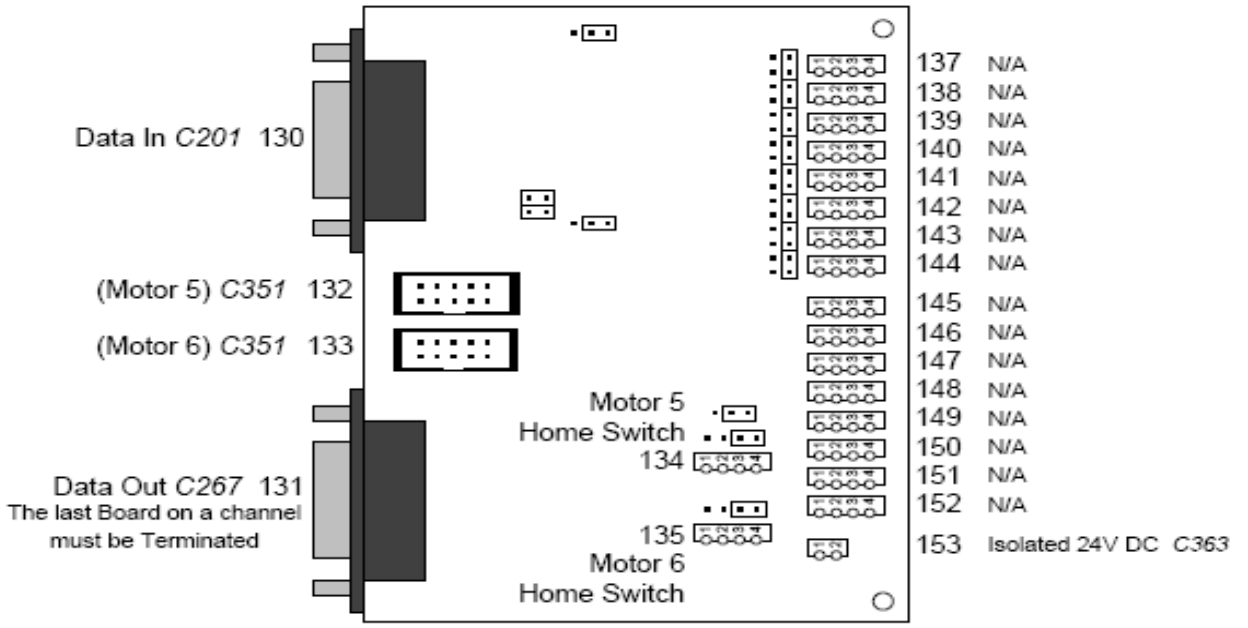

Note: Encoder Feedback and Home Switch inputs for Motors 5 and 6 will be received through Ch.1.2 if the jumpers on CN5 of the FPGA board are set 13-15. If they are set 13-11, they will be received through Ch.3.1.

Plasma Channel 2 - Mini Serial I/O Board Configuration

Connection and Cable Numbers

Channel 2 Board 1 (YZ)

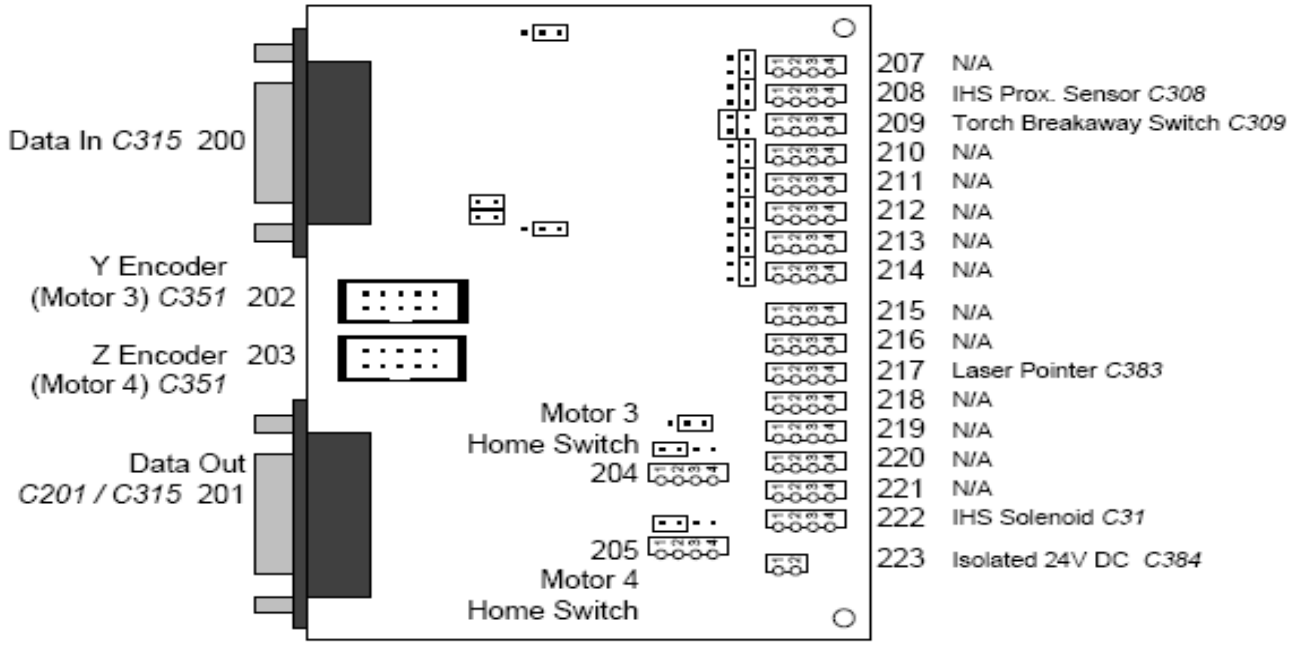

Channel 2 Board 2

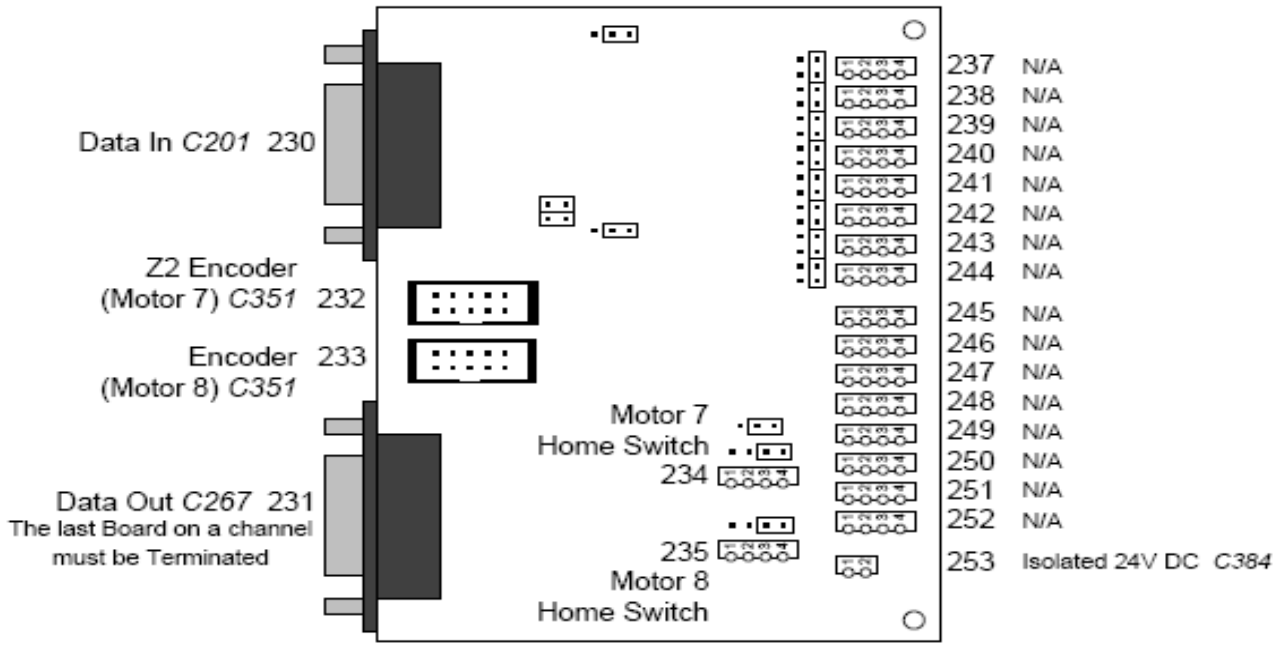

Note: Encoder Feedback and Home Switch inputs for Motors 7 and 8 will be received through Ch.2.2 if the jumpers on CN5 of the FPGA board are set 14-16. If they are set 14-12, they will be received through Ch.4.1.

Plasma Channel 3 - Mini Serial I/O Board Configuration

Connection and Cable Numbers

Channel 3 Board 1

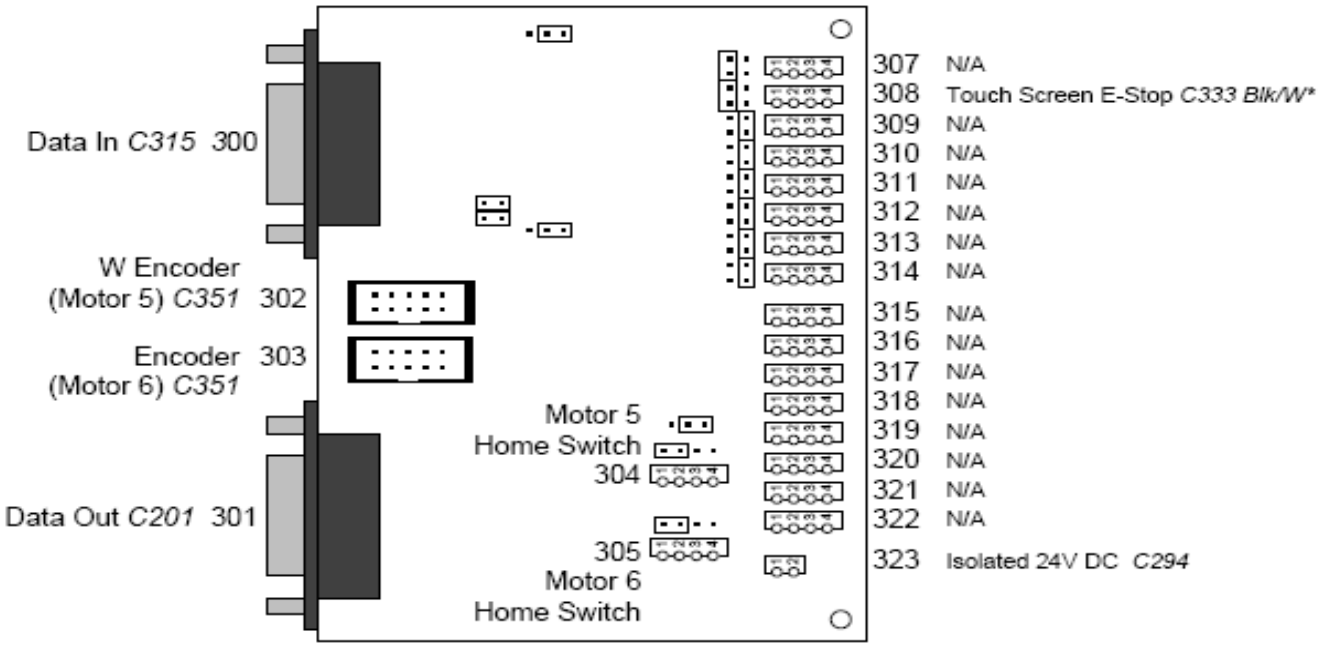

Note: Encoder Feedback and Home Switch inputs for Motors 5 and 6 will be received through Ch.3.1 if the jumpers on CN5 of the FPGA board are set 13-11. If they are set 13-15, they will be received through Ch.1.2.

* *C335* connects to *C333* (4 way joiner).
C333 does not plug into the IO card, but is shielded to the box.

Channel 3 Board 2 (Analogue)

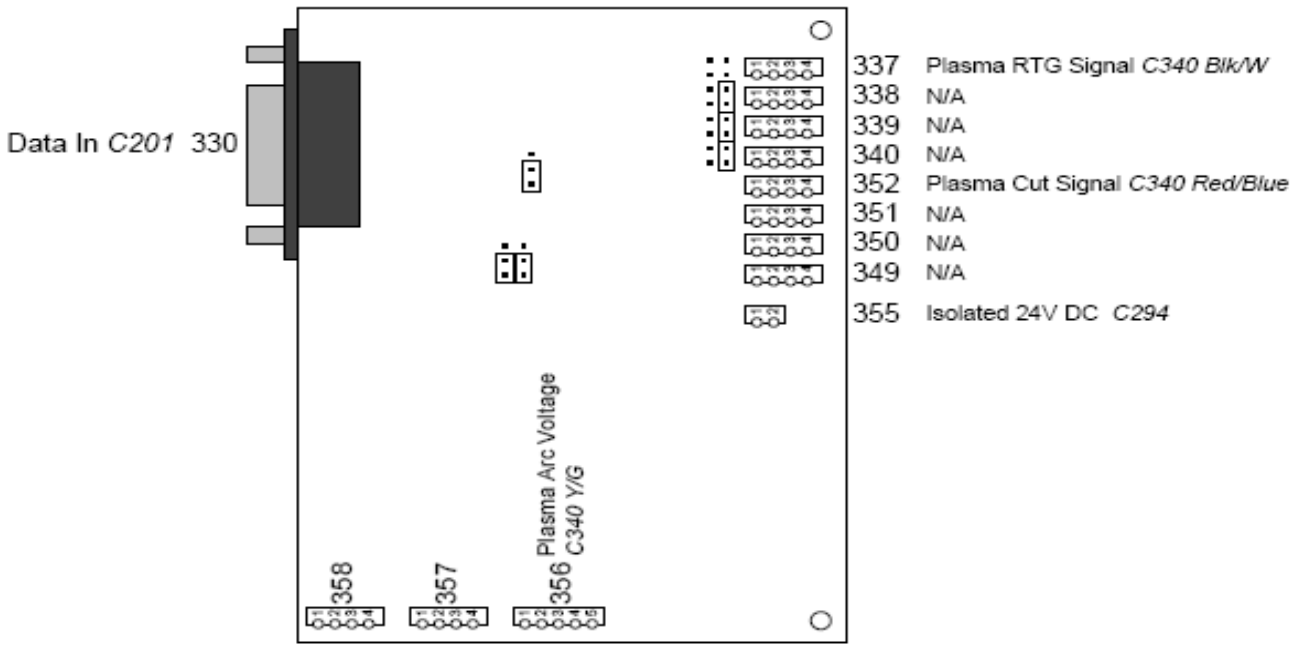

Machine Circuit Board Images

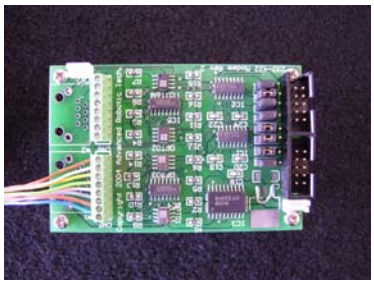

E716 Touch Screen 232-422 Board

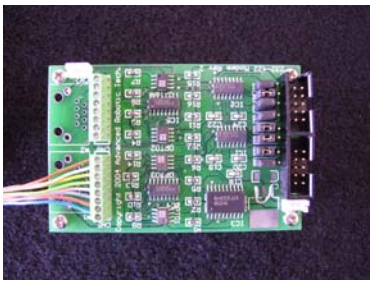

E715 Control Box 232-422 Board

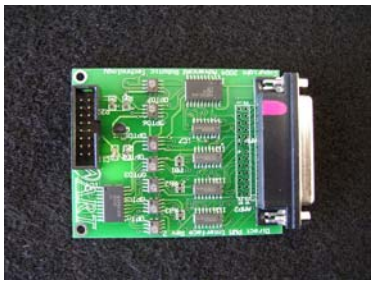

E440 PWM Interface Board

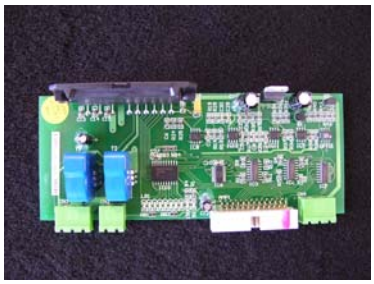

E439 PWM Amp Board

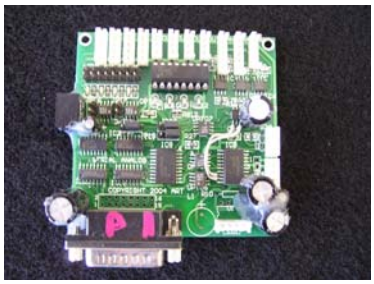

E438 Analogue Board

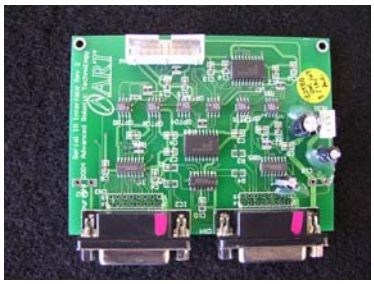

E442 Serial IO Interface Board

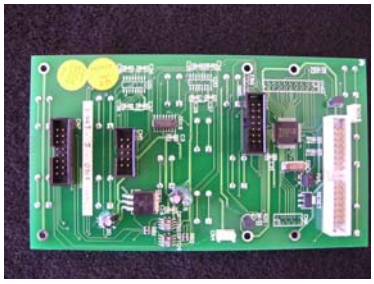

E443 Pendant Board

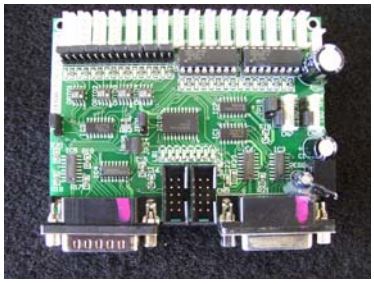

E441 Mini Serial IO Board

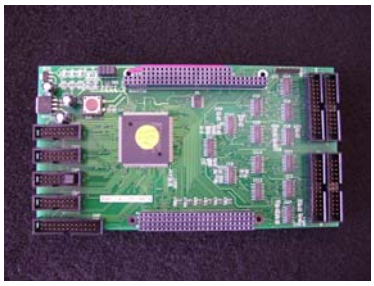

E436 FPGA Breakout Board

E644 Analogue Power Supply

PMAC Controller

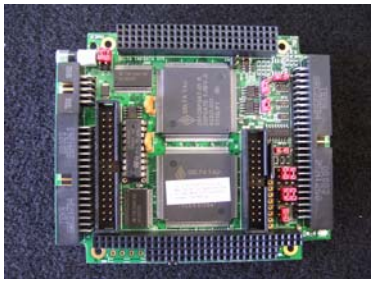

PMAC Additional Channel

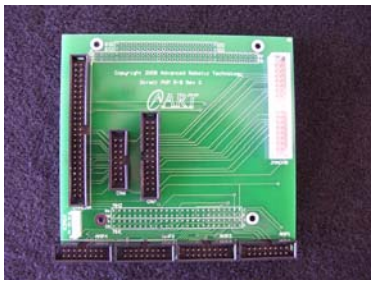

E437 5-8 Extension Board

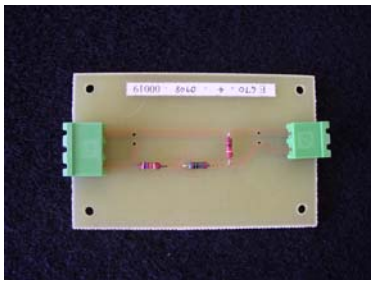

E670 Plasma Voltage Divider

HOME SIDE X1 GEAR BOX

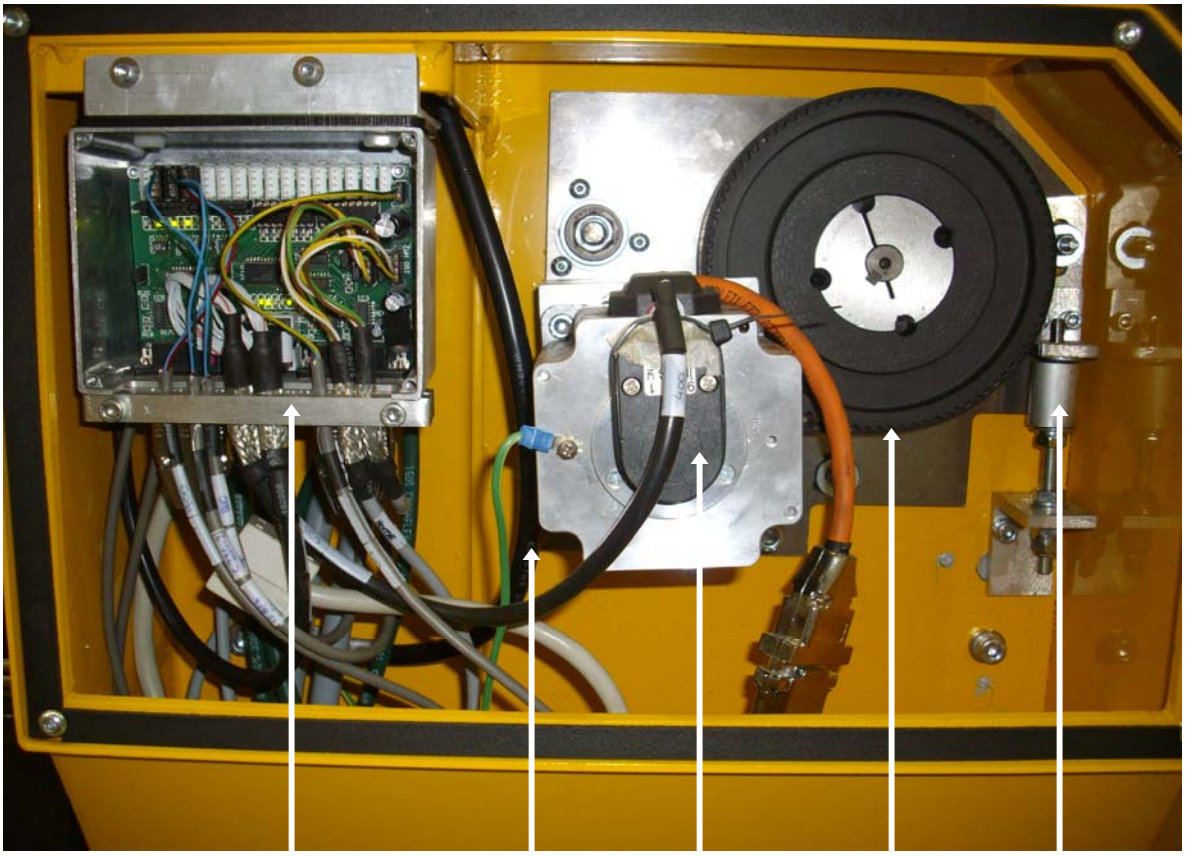

Mini Serial I/O CH1	Motor X1	Motor Encoder	Drive Belt	Gear Box Tensioner

OFF SIDE X2 GEAR BOX

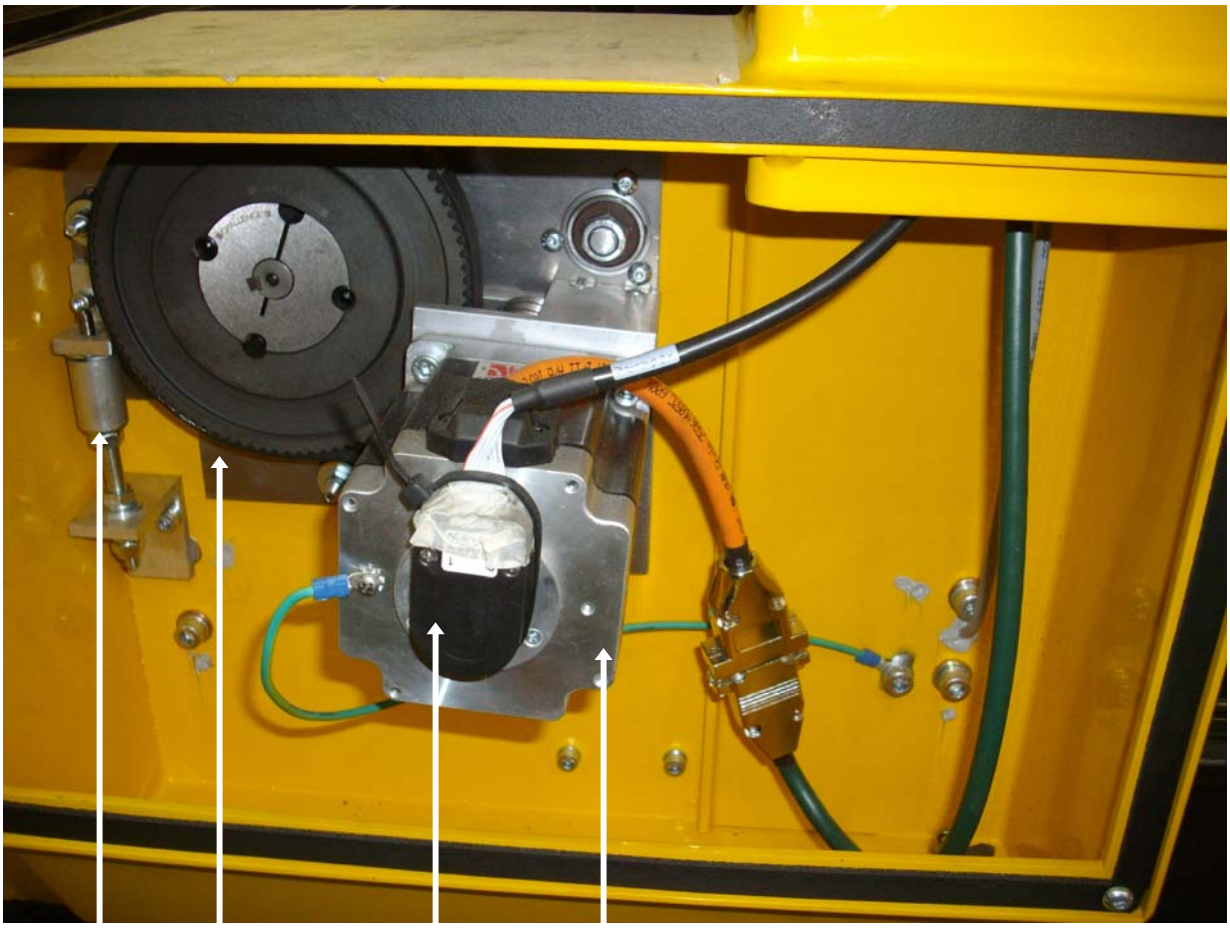

Gear Box Tensioner	Drive Belt	Motor Encoder	Motor X2

TOOL HEAD Y and Z GEAR BOXES

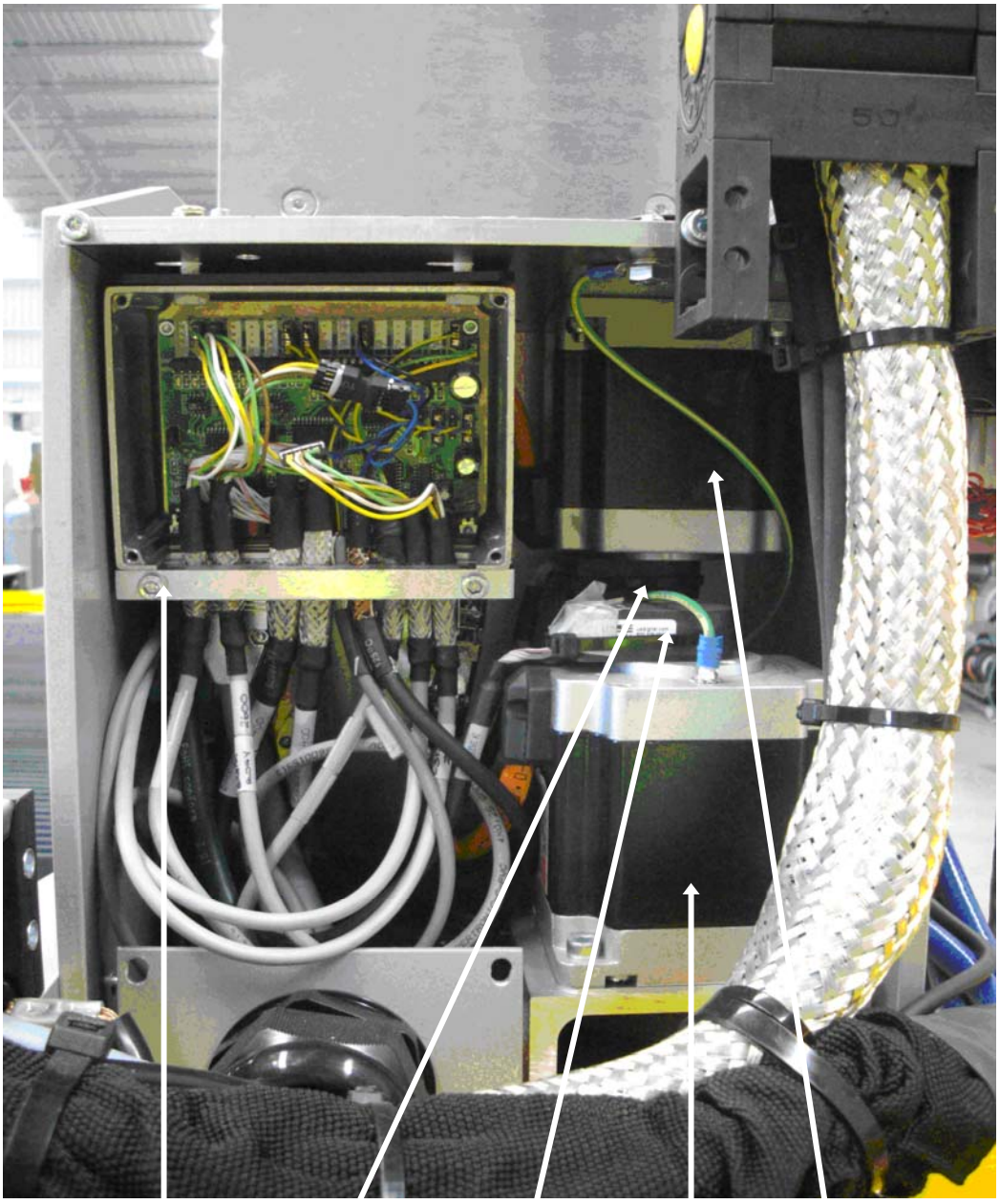

Mini Serial I/O CH2	Z Motor Encoder	Y Motor Encoder	Motor Y	Motor Z

POWER and CHANNEL 3

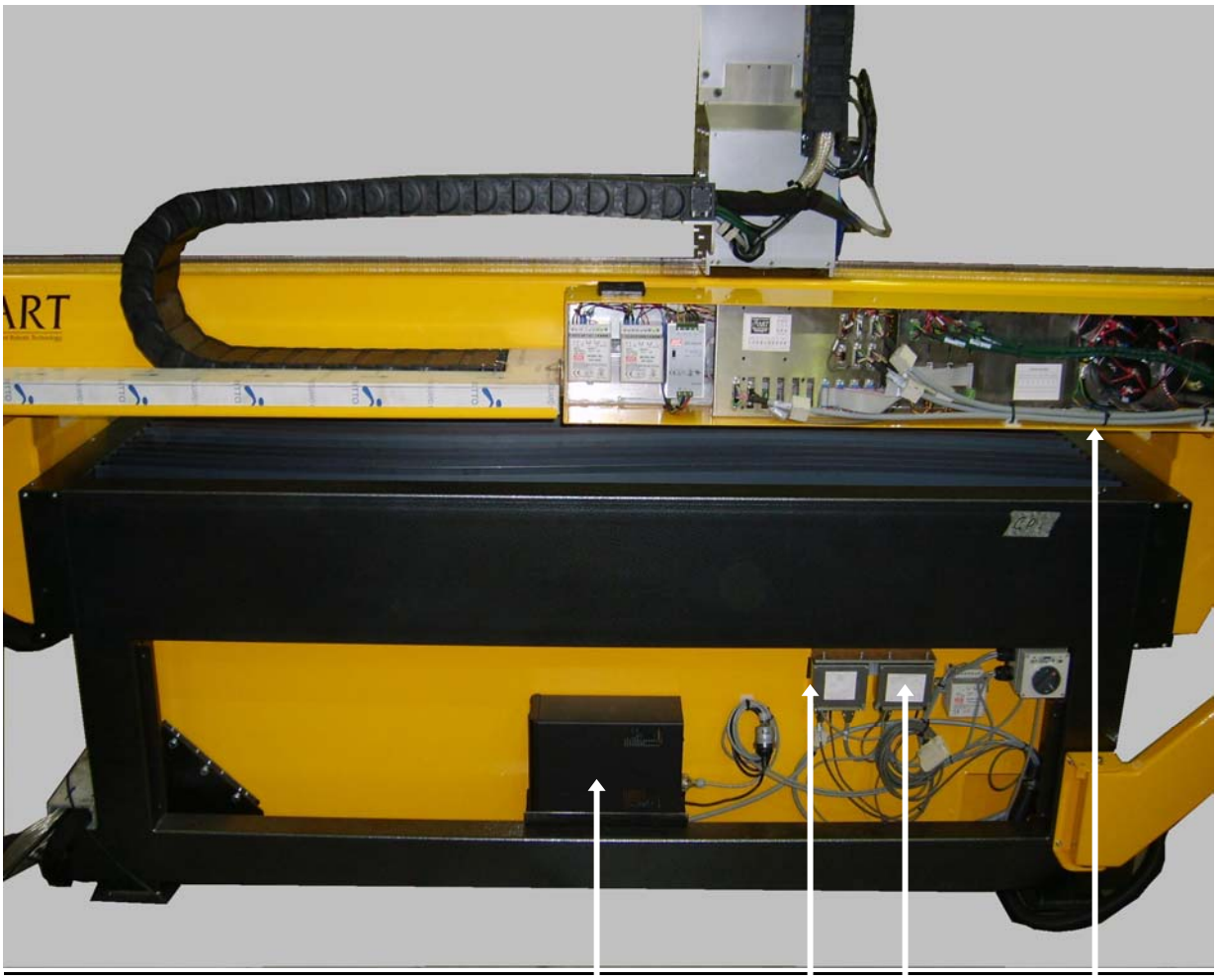

CONTROL BOX

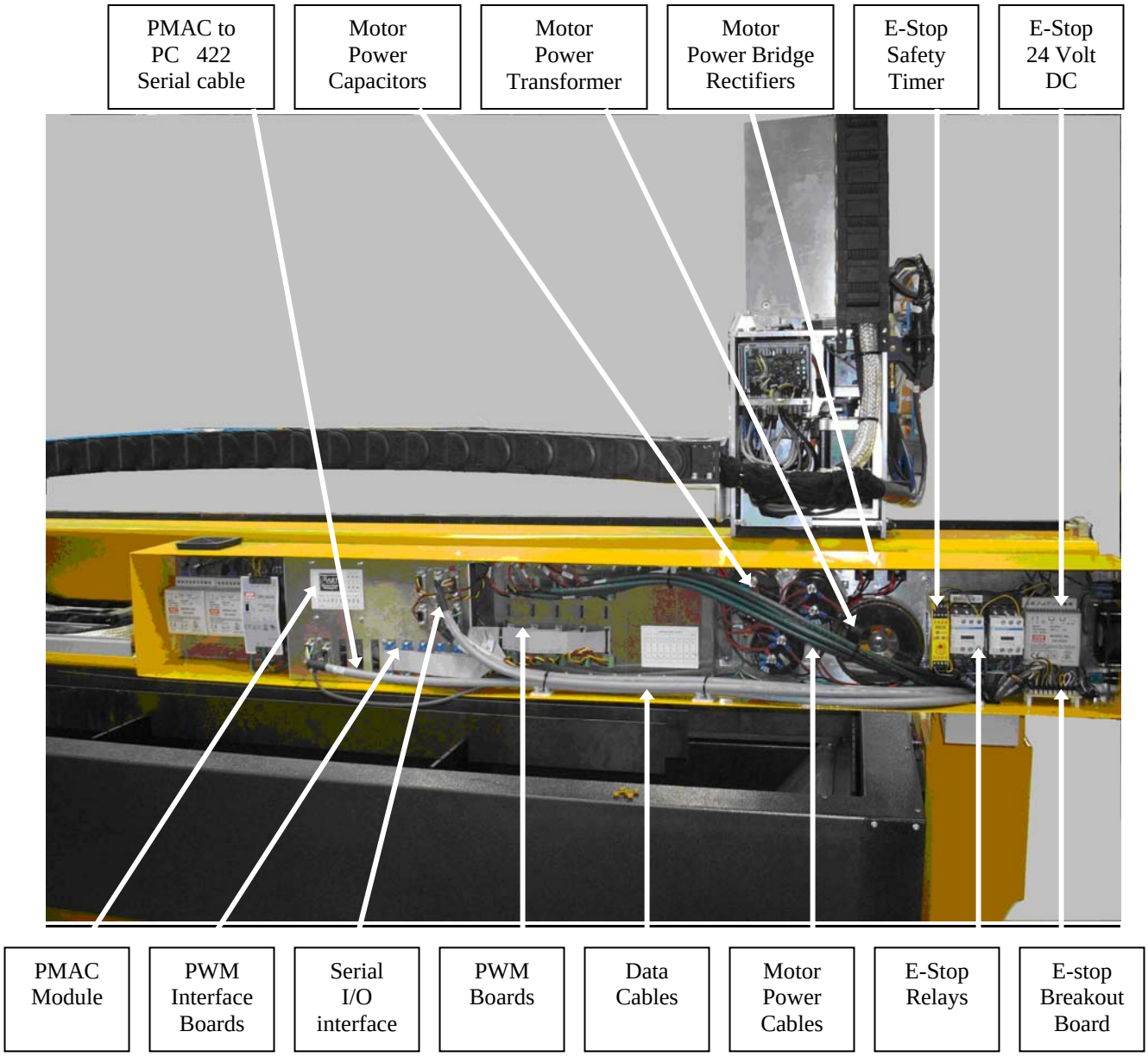
PMAC to PC 422 Serial cable
Motor Power Capacitors
Motor Power Transformer
Motor Power Bridge Rectifiers
E-Stop Safety Timer
E-Stop 24 Volt DC
PMAC Module
PWM Interface Boards
Serial I/O interface
PWM Boards
Data Cables
Motor Power Cables
E-Stop Relays
E-stop Breakout Board

CONTROL BOX POWER SUPPLIES

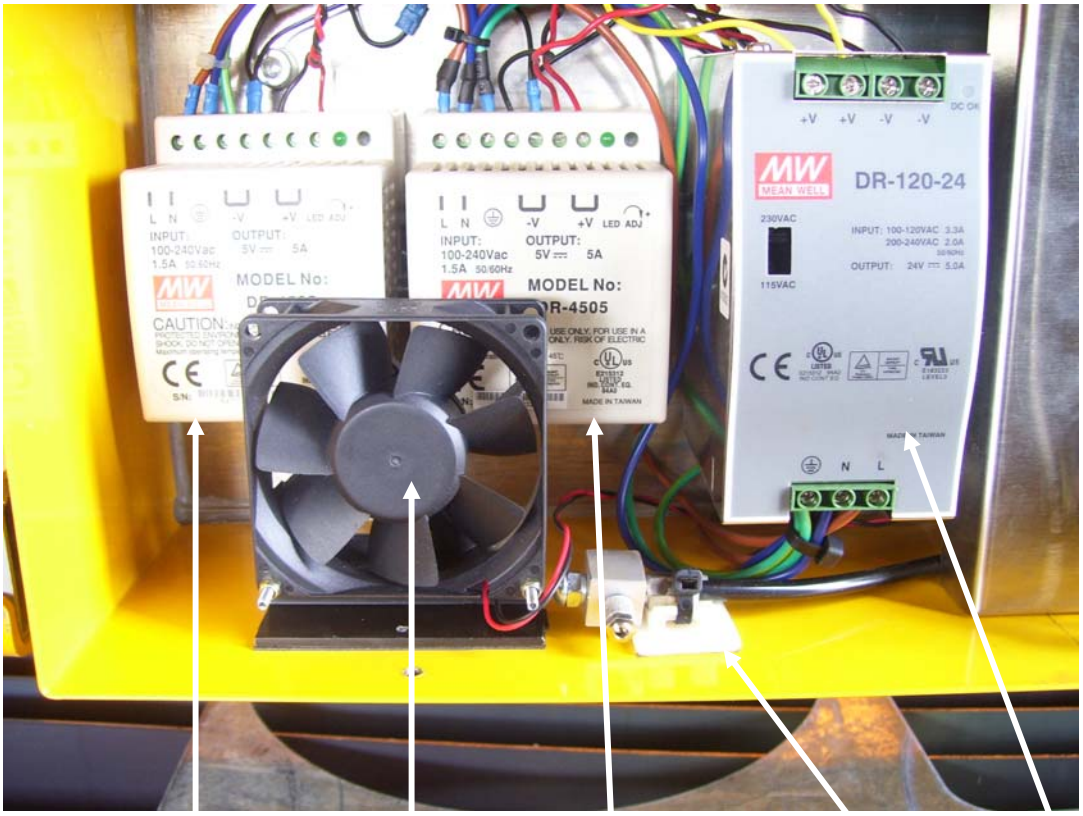

PMAC 5 Volt DC Supply	Cooling Fan	I/O 5 Volt DC Power	Positive Pressure Air Bleed	I/O 24 Volt DC Power

PMAC MODULE REAR

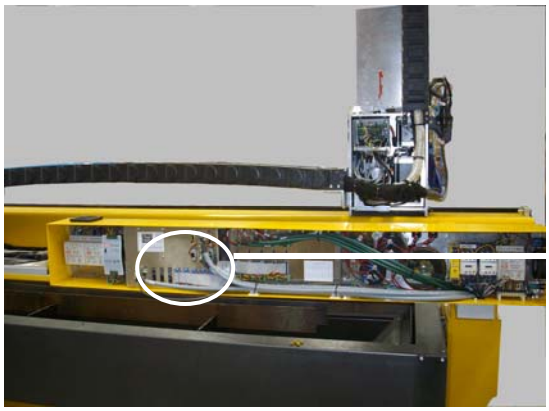

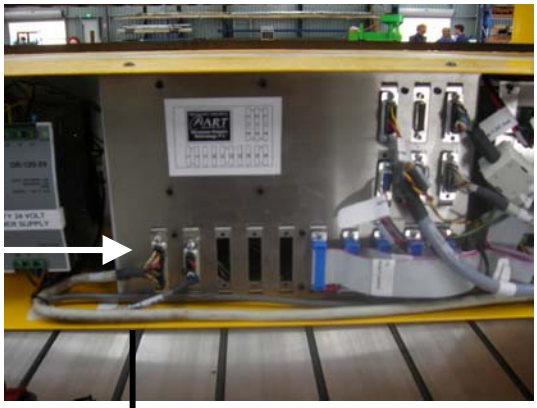

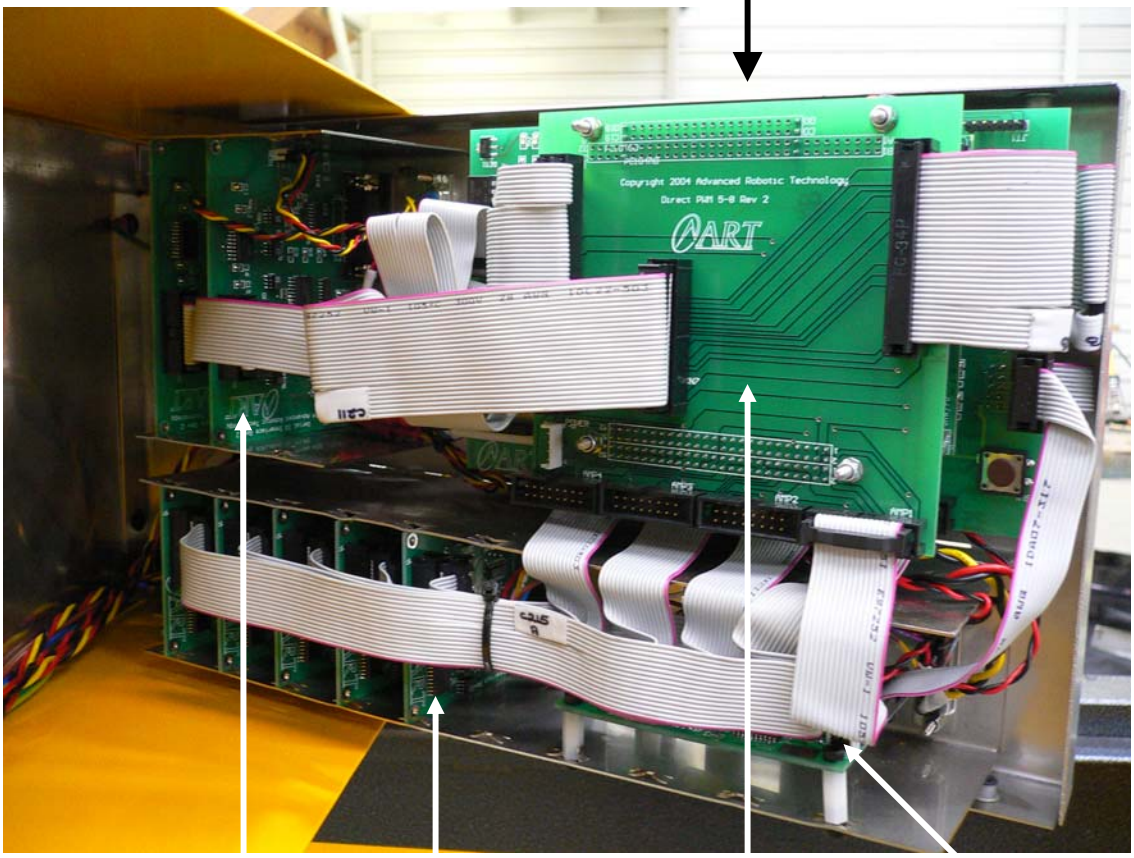

Serial IO Interface Board	PWM Interface Board	5-8 Extension Board	232-422 IO Interface Board

PMAC MODULE SIDE

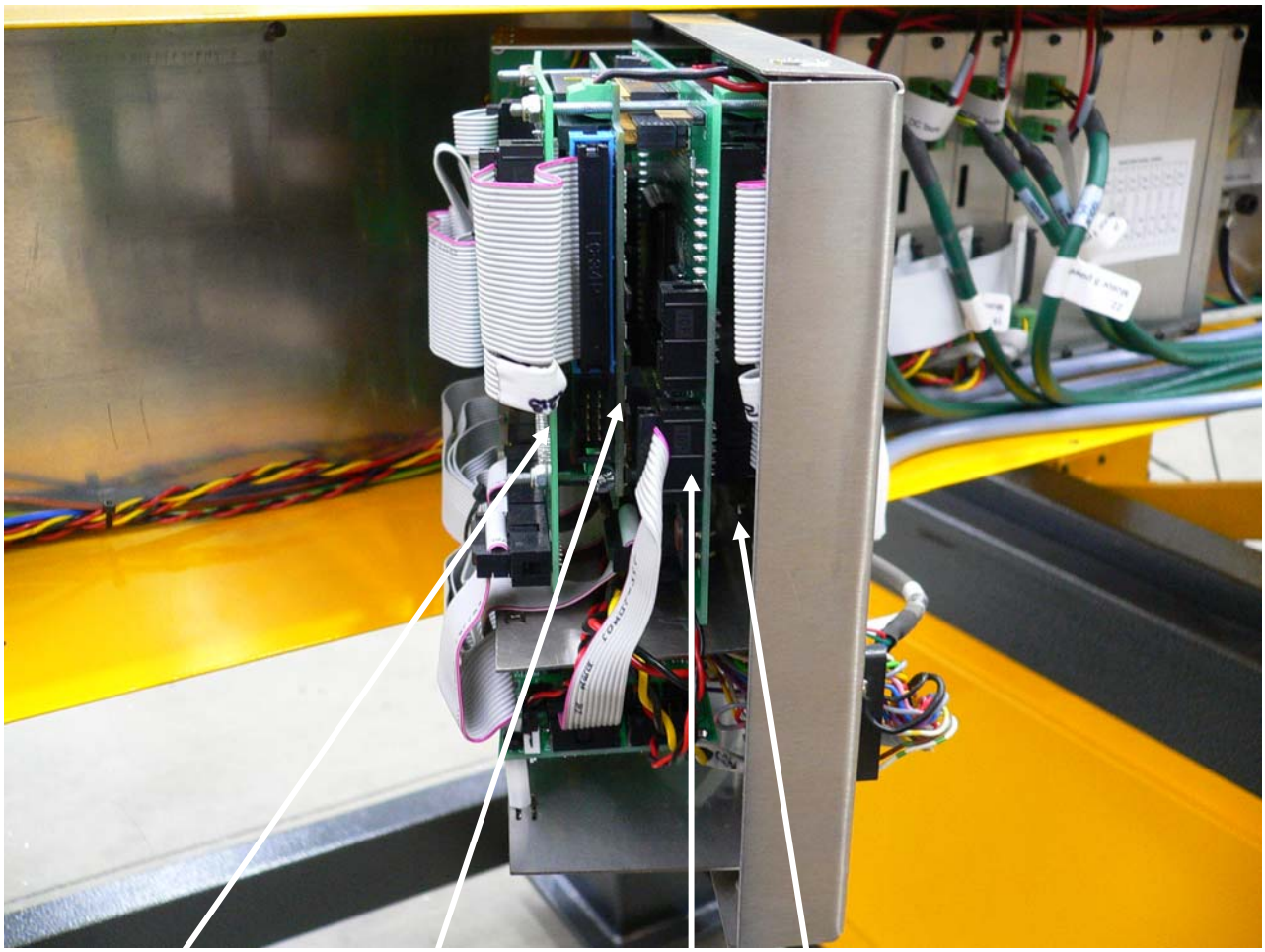

Axis 5-8 Breakout	PMAC Axis 5-8 Expansion	FPGA Breakout Board	PMAC

TOUCH SCREEN COMPUTER

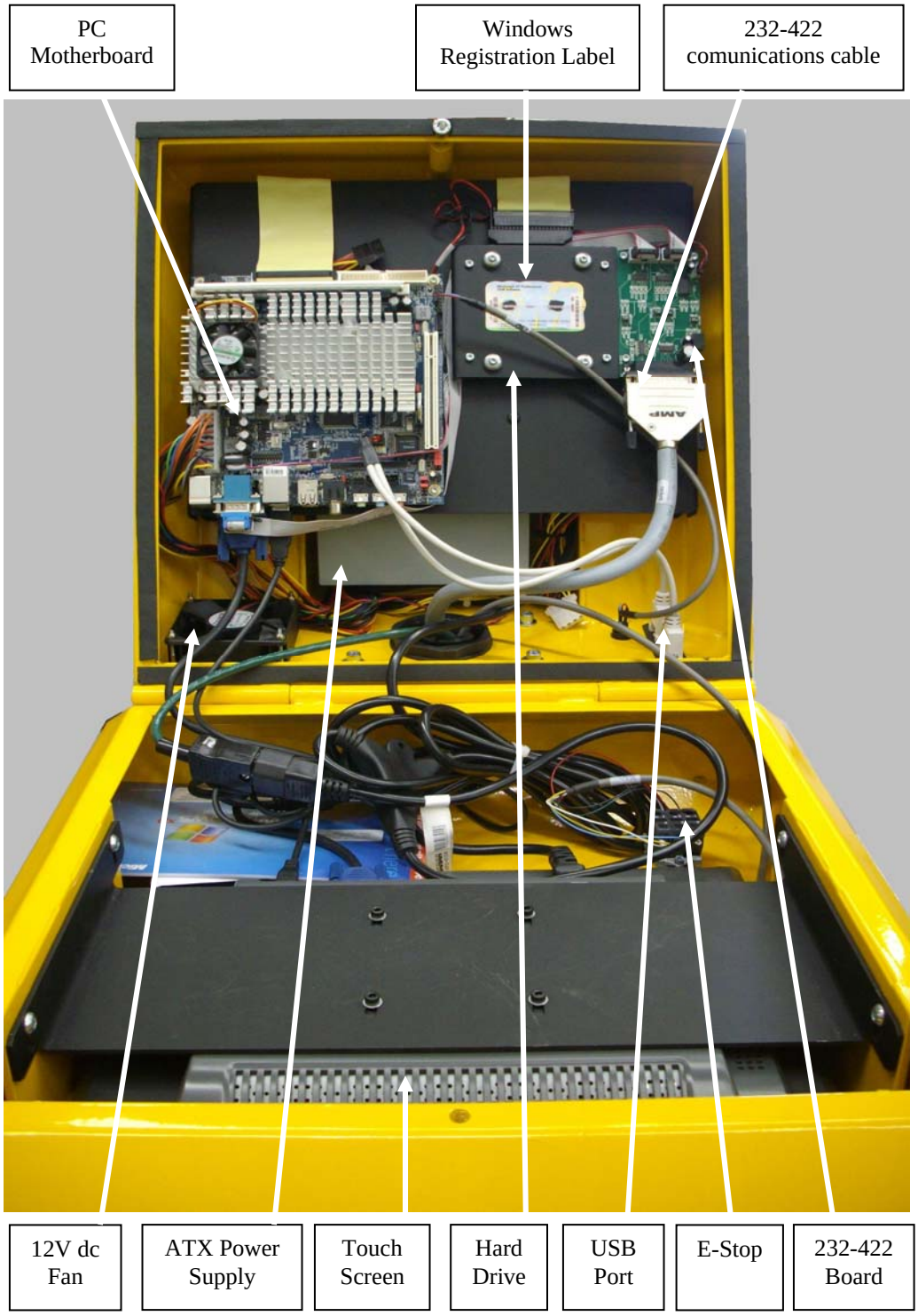

HPR 130 ARC VOLTAGE ANALOGUE CONNECTION

Inside HYPERTHERM HPR Unit

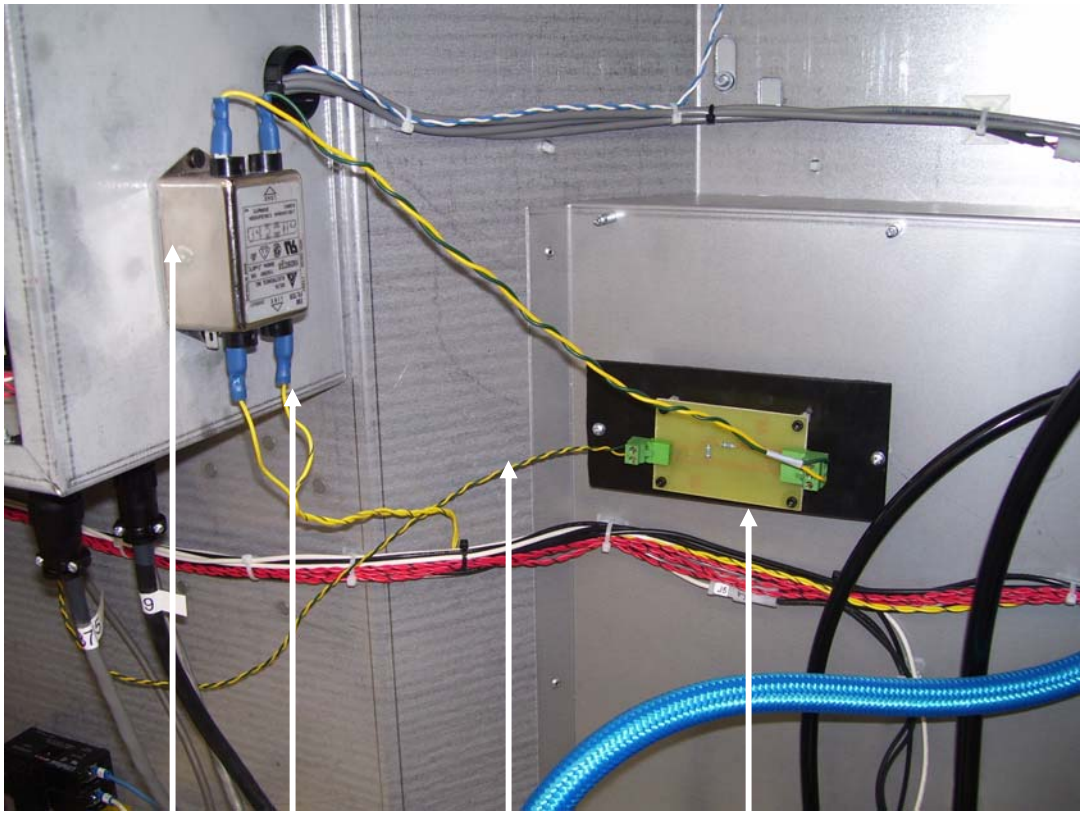

Electrical Noise Filter	Arc Voltage Input	Analogue Output to Channel 3	Voltage Divider Board

CONTROL BOX MAINS WIRING

Note: Each drawing will be A3 fold outs

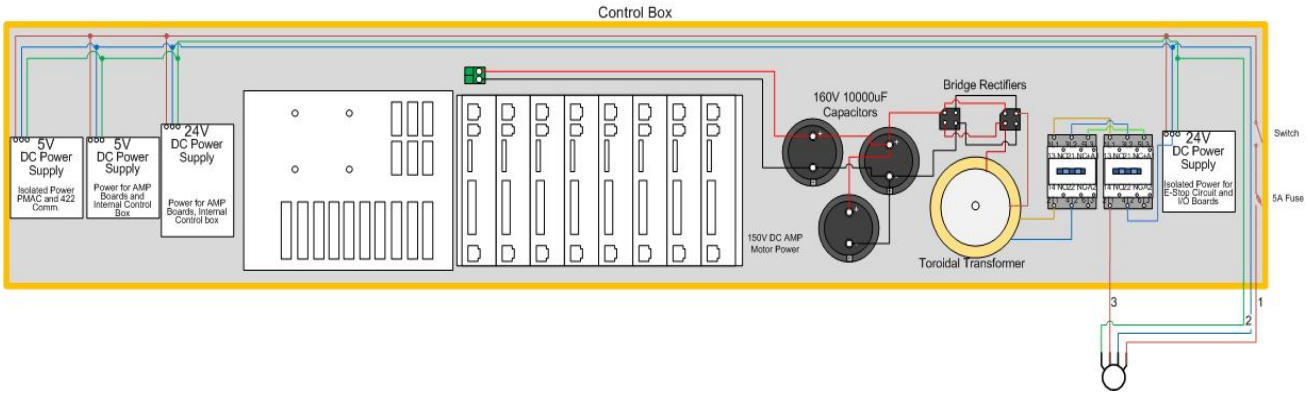

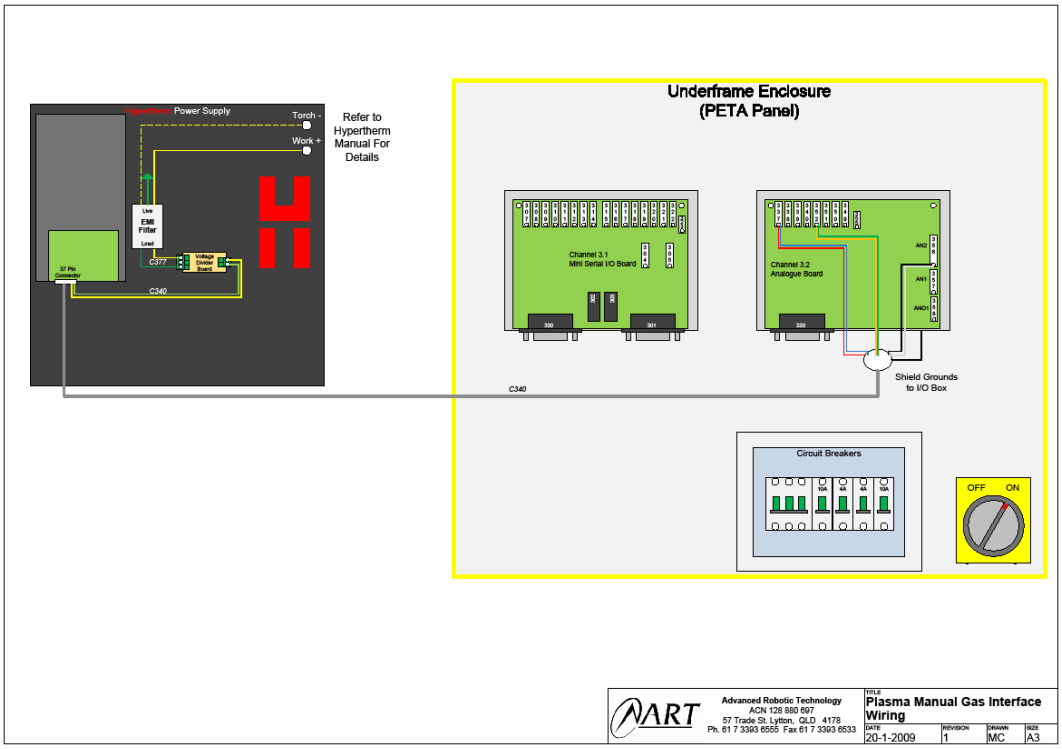
Hypertherm Power Supply
Torch -
Work +
Live
EMI Filter
Load
C377
Voltage Divider Board
37 Pin Connector
C340
Refer to Hypertherm Manual For Details
Underframe Enclosure
(PETA Panel)
Channel 3.1
Mini Serial I/O Board
Channel 3.2
Analogue Board
AN2
AN1
AN01
Shield Grounds to I/O Box
C340
Circuit Breakers
10A
4A
4A
10A
OFF
ON
ART
Advanced Robotic Technology
ACN 128 880 697
57 Trade St. Lytton, QLD 4178
Ph. 61 7 3393 6555 Fax 61 7 3393 6533
TITLE
Plasma Manual Gas Interface Wiring
DATE
20-1-2009
REVISION
1
DRAWN
MC
SIZE
A3

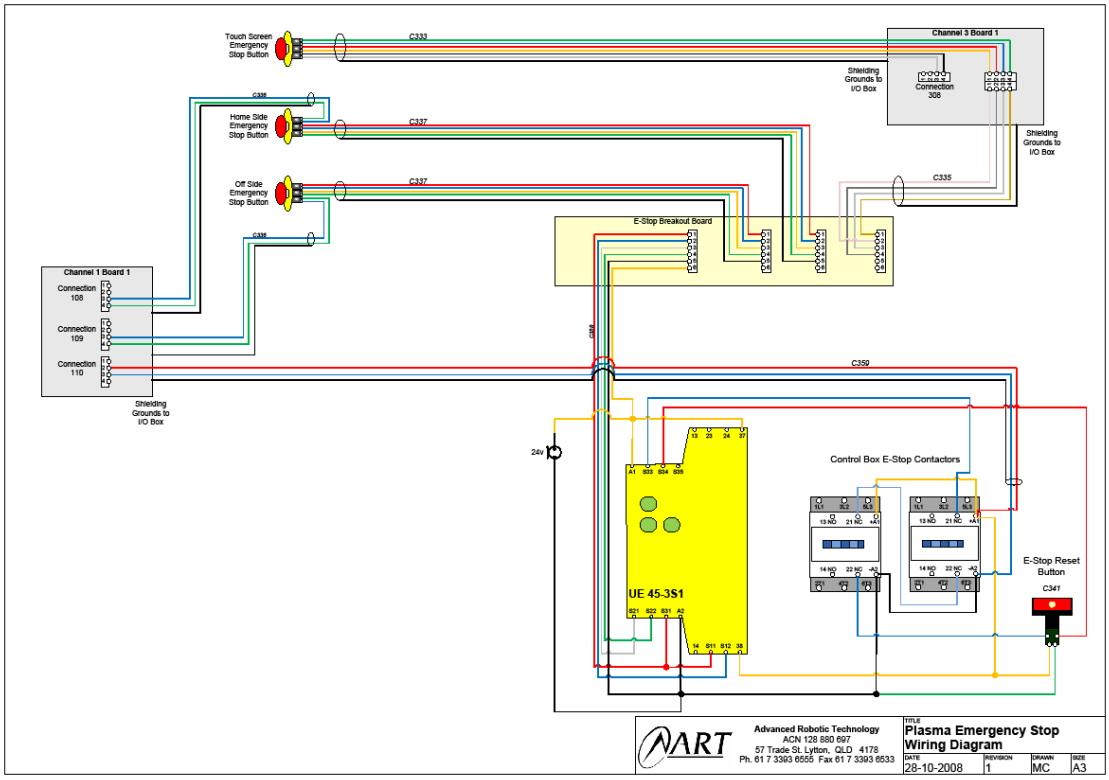
Touch Screen Emergency Stop Button
C333
Channel 3 Board 1
Shielding Grounds to I/O Box
Connection 308
Shielding Grounds to I/O Box
C336
Home Side Emergency Stop Button
C337
Off Side Emergency Stop Button
C337
C335
C338
E-Stop Breakout Board
Channel 1 Board 1
Connection 108
Connection 109
Connection 110
Shielding Grounds to I/O Box
C359
24v
Control Box E-Stop Contactors
UE 45-3S1
E-Stop Reset Button
C347
ART
Advanced Robotic Technology
ACN 128 880 697
57 Trade St. Lytton, QLD 4178
Ph. 61 7 3393 6555 Fax 61 7 3393 6533
TITLE
Plasma Emergency Stop Wiring Diagram
DATE
28-10-2008
REVISION
1
DRAWN
MC
SIZE
A3

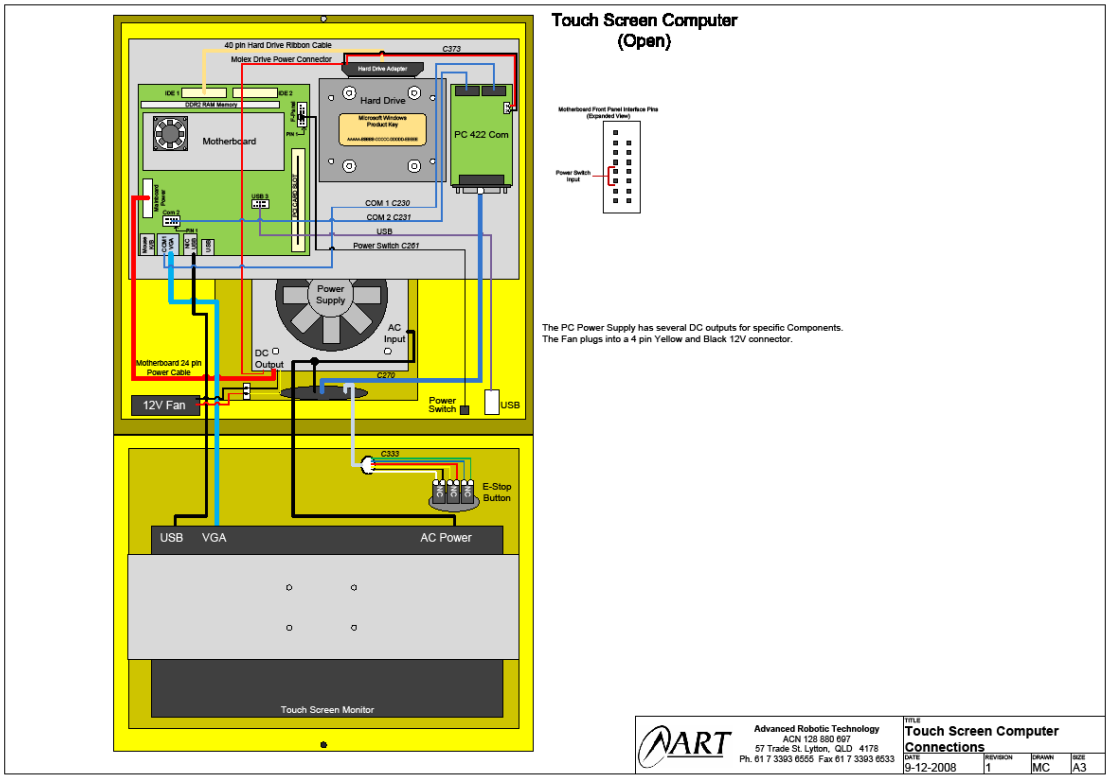
Touch Screen Computer
(Open)
40 pin Hard Drive Ribbon Cable
Molex Drive Power Connector
C373
Hard Drive Adapter
Hard Drive
Motherboard
PC 422 Com
COM 1 C230
COM 2 C231
USB
Power Switch C261
Power Supply
AC Input
DC Output
Motherboard 24 pin Power Cable
C270
12V Fan
Power Switch
USB
C333
E-Stop Button
USB
VGA
AC Power
Touch Screen Monitor
The PC Power Supply has several DC outputs for specific Components.
The Fan plugs into a 4 pin Yellow and Black 12V connector.
ART
Advanced Robotic Technology
ACN 128 880 697
57 Trade St. Lytton, QLD 4178
Ph. 61 7 3393 6555 Fax 61 7 3393 6533
TITLE
Touch Screen Computer Connections
DATE 9-12-2008
REVISION 1
DRAWN MC
SIZE A3

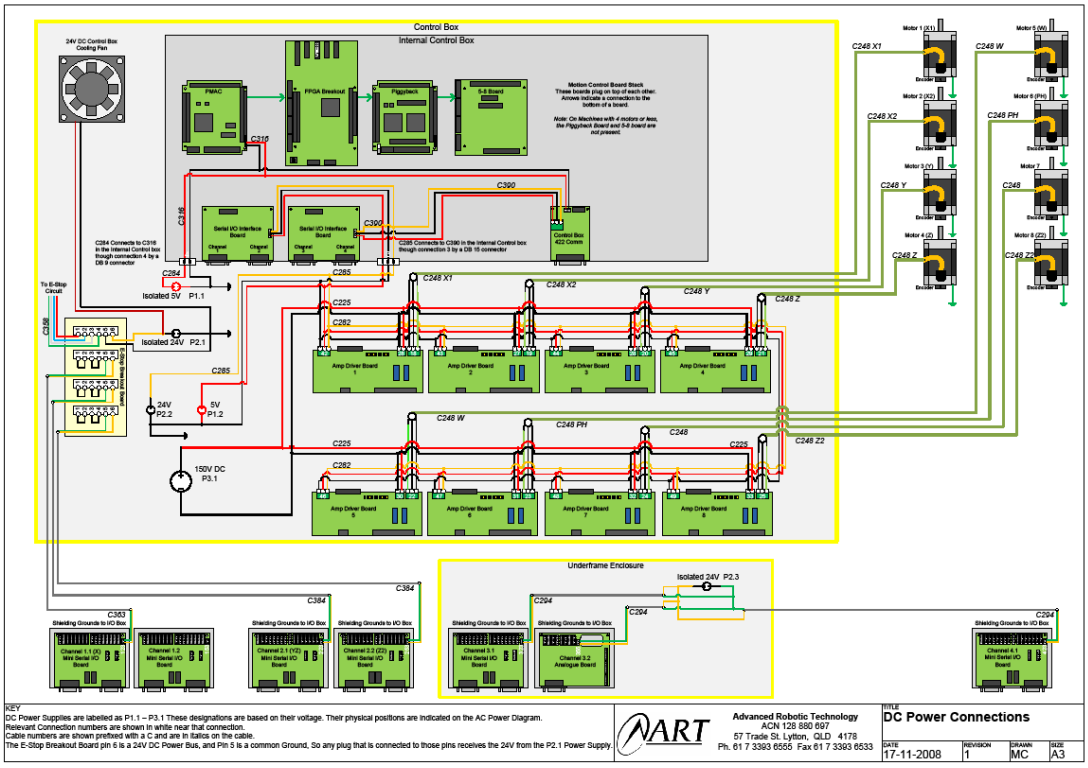
Control Box
Internal Control Box
24V DC Control Box Cooling Fan
PMAC
FPGA Breakout
Piggyback
5-8 Board
Motion Control Board Stack
These boards plug on top of each other.
Arrows indicate a connection to the bottom of a board.
Note: On Machines with 4 motors or less, the Piggyback Board and 5-8 board are not present.
C315
C390
C316
Serial I/O Interface Board
Serial I/O Interface Board
C389
Control Box 422 Comm
C384 Connects to C316 in the Internal Control box through connection 4 by a DB 9 connector
C385 Connects to C390 in the Internal Control box through connection 3 by a DB 15 connector
C384
C385
To E-Stop Circuit
C326
Isolated 5V P1.1
Isolated 24V P2.1
24V P2.2
5V P1.2
150V DC P3.1
C225
C282
Amp Driver Board 1
Amp Driver Board 2
Amp Driver Board 3
Amp Driver Board 4
Amp Driver Board 5
Amp Driver Board 6
Amp Driver Board 7
Amp Driver Board 8
C248 X1
C248 X2
C248 Y
C248 Z
C248 W
C248 PH
C248
C248 Z2
Motor 1 (X1)
Motor 2 (X2)
Motor 3 (Y)
Motor 4 (Z)
Motor 5 (W)
Motor 6 (PH)
Motor 7
Motor 8 (Z2)
Encoder Board
Underframe Enclosure
Isolated 24V P2.3
C294
C363
C384
Shielding Grounds to I/O Box
Channel 1.1 (X) Mini Serial I/O Board
Channel 1.2 Mini Serial I/O Board
Channel 2.1 (Y2) Mini Serial I/O Board
Channel 2.2 (Z2) Mini Serial I/O Board
Channel 3.1 Mini Serial I/O Board
Channel 3.2 Analogue Board
Channel 4.1 Mini Serial I/O Board
KEY
DC Power Supplies are labelled as P1.1 – P3.1 These designations are based on their voltage. Their physical positions are indicated on the AC Power Diagram.
Relevant Connection numbers are shown in white near that connection.
Cable numbers are shown prefixed with a C and are in italics on the cable.
The E-Stop Breakout Board pin 6 is a 24V DC Power Bus, and Pin 5 is a common Ground, So any plug that is connected to those pins receives the 24V from the P2.1 Power Supply.
ART
Advanced Robotic Technology
ACN 128 880 697
57 Trade St. Lytton, QLD 4178
Ph. 61 7 3393 6555 Fax 61 7 3393 6533
TITLE
DC Power Connections
DATE 17-11-2008
REVISION 1
DRAWN MC
SIZE A3

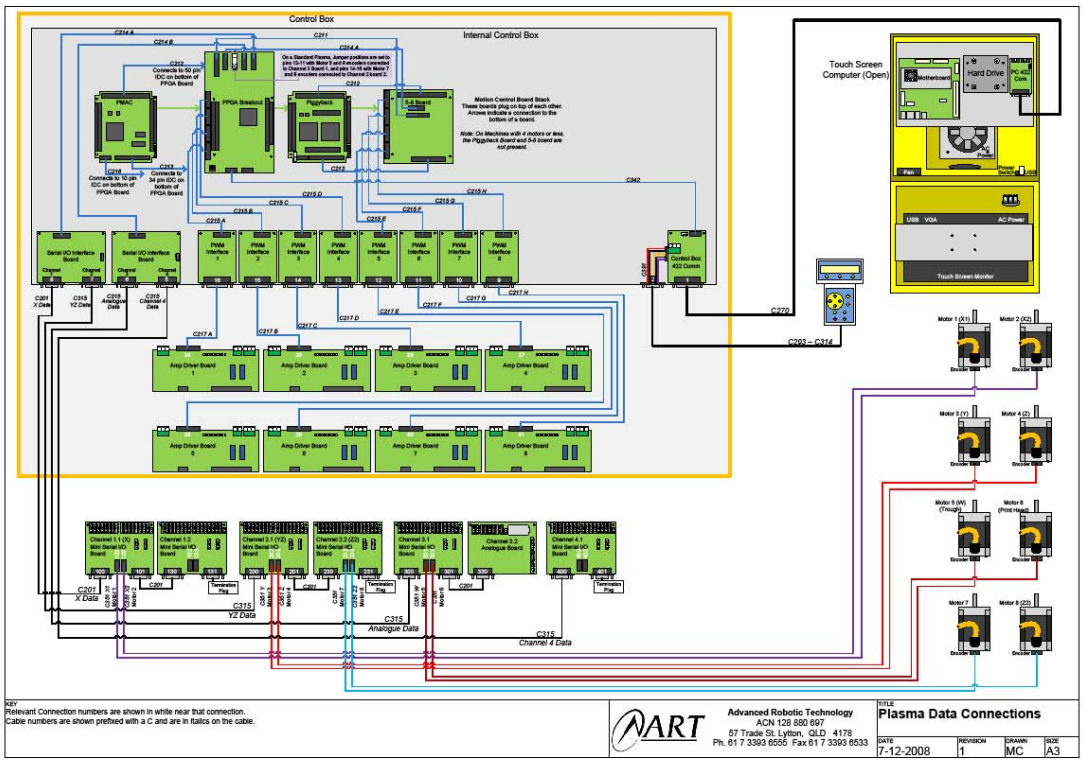
Control Box
Internal Control Box
Touch Screen Computer (Open)
Motherboard
Hard Drive
Touch Screen Monitor
Motion Control Board Stack
These boards plug on top of each other.
Arrows indicate a connection to the bottom of a board.
Note: On Machines with 4 motors or less, the Piggyback Board and 5-8 board are not present.
Amp Driver Board
Serial I/O Interface Board
PWM Interface
Channel 1.1 (X) Mini Serial I/O Board
Channel 1.2 Mini Serial I/O Board
Channel 2.1 (Y2) Mini Serial I/O Board
Channel 2.2 (Z2) Mini Serial I/O Board
Channel 3.1 Mini Serial I/O Board
Channel 3.2 Analogue Board
Channel 4.1 Mini Serial I/O Board
C201 X Data
C315 YZ Data
C315 Analogue Data
C315 Channel 4 Data
C270
C293 – C314
Motor 1 (X1)
Motor 2 (X2)
Motor 3 (Y)
Motor 4 (Z)
Motor 5 (W) (Trough)
Motor 6 (Print Head)
Motor 7
Motor 8 (Z2)
KEY
Relevant Connection numbers are shown in white near that connection.
Cable numbers are shown prefixed with a C and are in italics on the cable.
Advanced Robotic Technology
ACN 128 880 697
57 Trade St, Lytton, QLD 4178
Ph. 61 7 3393 6555 Fax 61 7 3393 6533
TITLE
Plasma Data Connections
DATE 7-12-2008
REVISION 1
DRAWN MC
SIZE A3

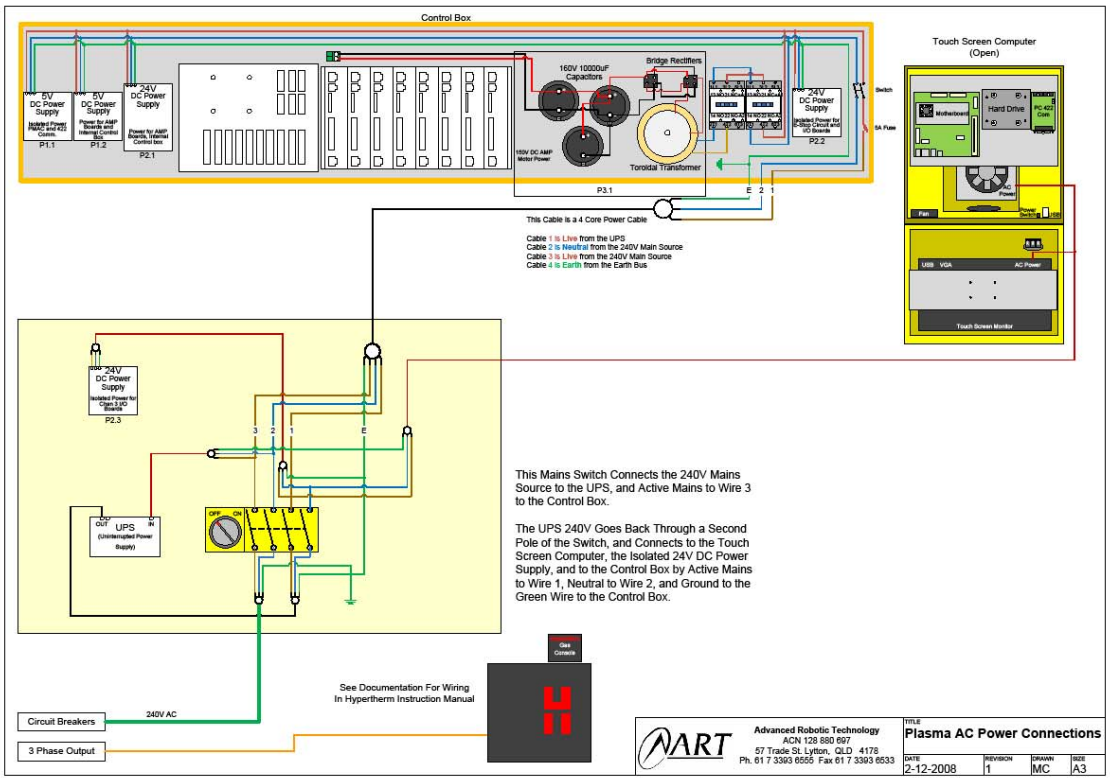
Control Box
5V DC Power Supply
24V DC Power Supply
P1.1
P1.2
P2.1
160V 10000uF Capacitors
Bridge Rectifiers
160V DC AMP Motor Power
Toroidal Transformer
P2.2
P3.1
Touch Screen Computer (Open)
Motherboard
Hard Drive
Touch Screen Monitor
This Cable is a 4 Core Power Cable
Cable 1 is Live from the UPS
Cable 2 is Neutral from the 240V Main Source
Cable 3 is Live from the 240V Main Source
Cable 4 is Earth from the Earth Bus
P2.3
UPS (Uninterrupted Power Supply)
This Mains Switch Connects the 240V Mains Source to the UPS, and Active Mains to Wire 3 to the Control Box.
The UPS 240V Goes Back Through a Second Pole of the Switch, and Connects to the Touch Screen Computer, the Isolated 24V DC Power Supply, and to the Control Box by Active Mains to Wire 1, Neutral to Wire 2, and Ground to the Green Wire to the Control Box.
See Documentation For Wiring In Hypertherm Instruction Manual
Circuit Breakers
240V AC
3 Phase Output
Advanced Robotic Technology
ACN 128 880 697
57 Trade St, Lytton, QLD 4178
Ph. 61 7 3393 6555 Fax 61 7 3393 6533
TITLE
Plasma AC Power Connections
DATE 2-12-2008
REVISION 1
DRAWN MC
SIZE A3

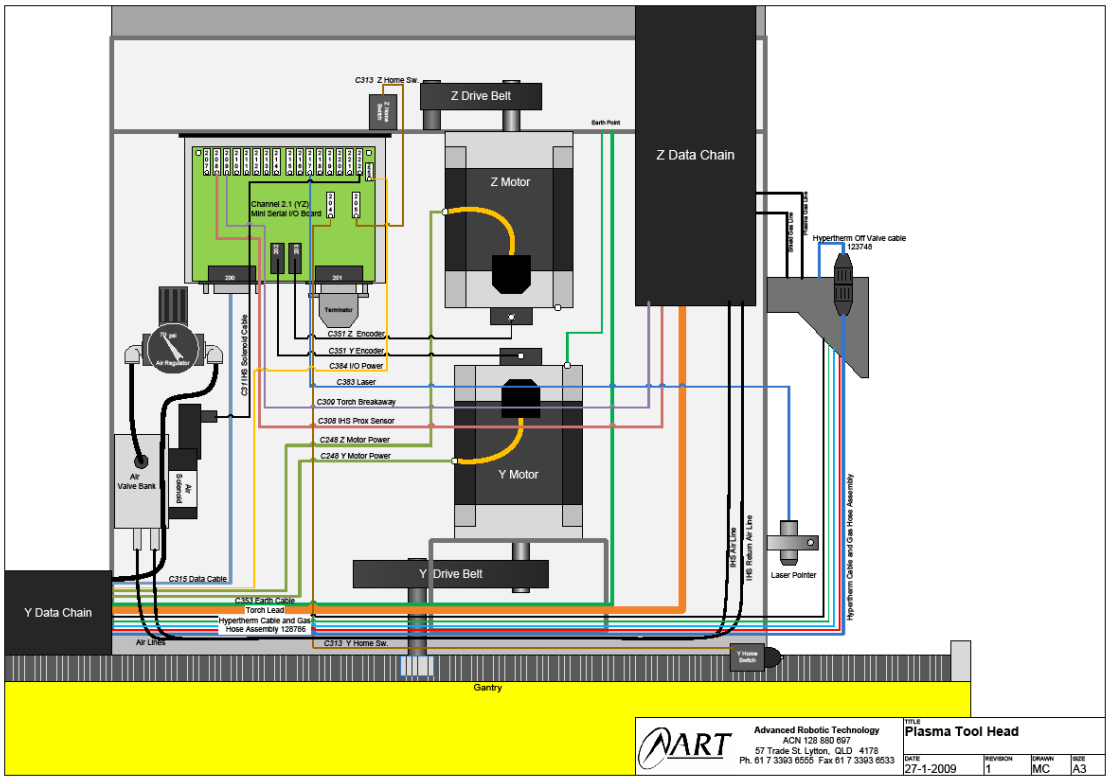
C313 Z Home Sw.
Z Home Switch
Z Drive Belt
Earth Point
Z Data Chain
Z Motor
Channel 2.1 (YZ)
Mini Serial I/O Board
C351 A
C384 A
200
201
202
203
Terminator
Hypertherm Off Valve cable
123748
Shield Gas Line
Shield Gas Valve
Air Regulator
C314 IHS Solenoid Cable
C351 Z Encoder
C351 Y Encoder
C384 I/O Power
C383 Laser
C309 Torch Breakaway
C308 IHS Prox Sensor
C248 Z Motor Power
C248 Y Motor Power
Y Motor
Air
Valve Bank
Air
Solenoid
IHS Return Air Line
Laser Pointer
Hypertherm Cable and Gas Hose Assembly
Y Drive Belt
C315 Data Cable
Y Data Chain
C351 Earth Cable
Torch Lead
Hypertherm Cable and Gas
Hose Assembly 128786
Air Lines
C313 Y Home Sw.
Y Home Switch
Gantry
ART
Advanced Robotic Technology
ACN 128 880 697
57 Trade St, Lytton, QLD 4178
Ph. 61 7 3393 6555 Fax 61 7 3393 6533
TITLE
Plasma Tool Head
DATE
27-1-2009
REVISION
1
DRAWN
MC
SIZE
A3

DRILL OPTION

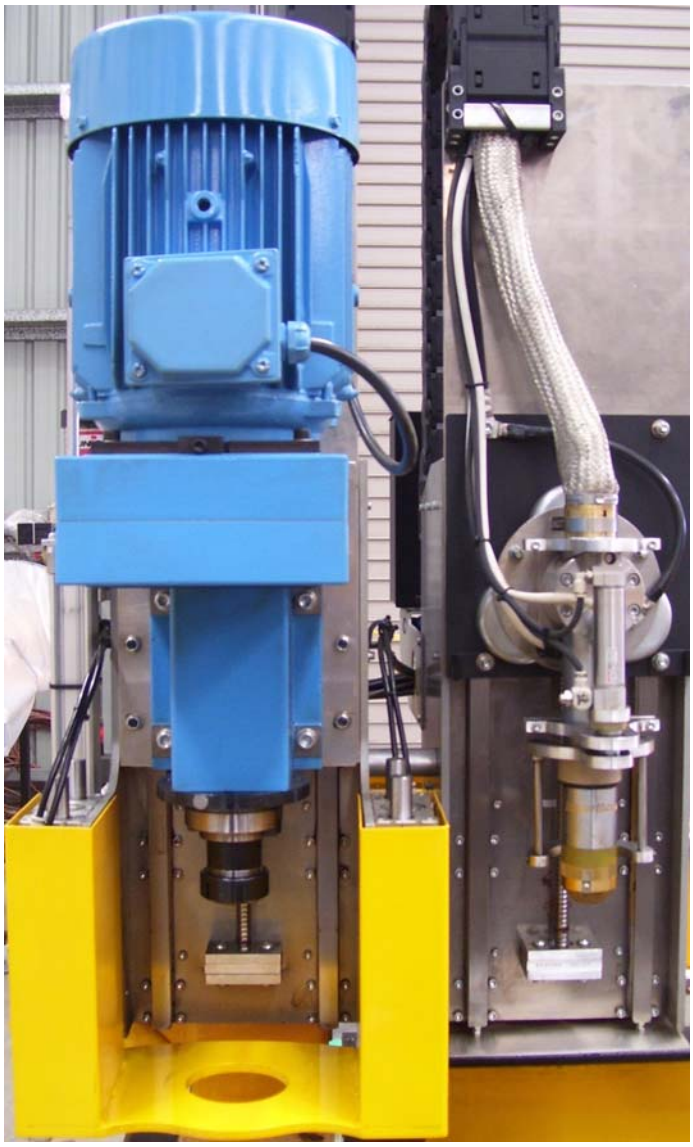

CUTTING FLUID MISTER OPTION

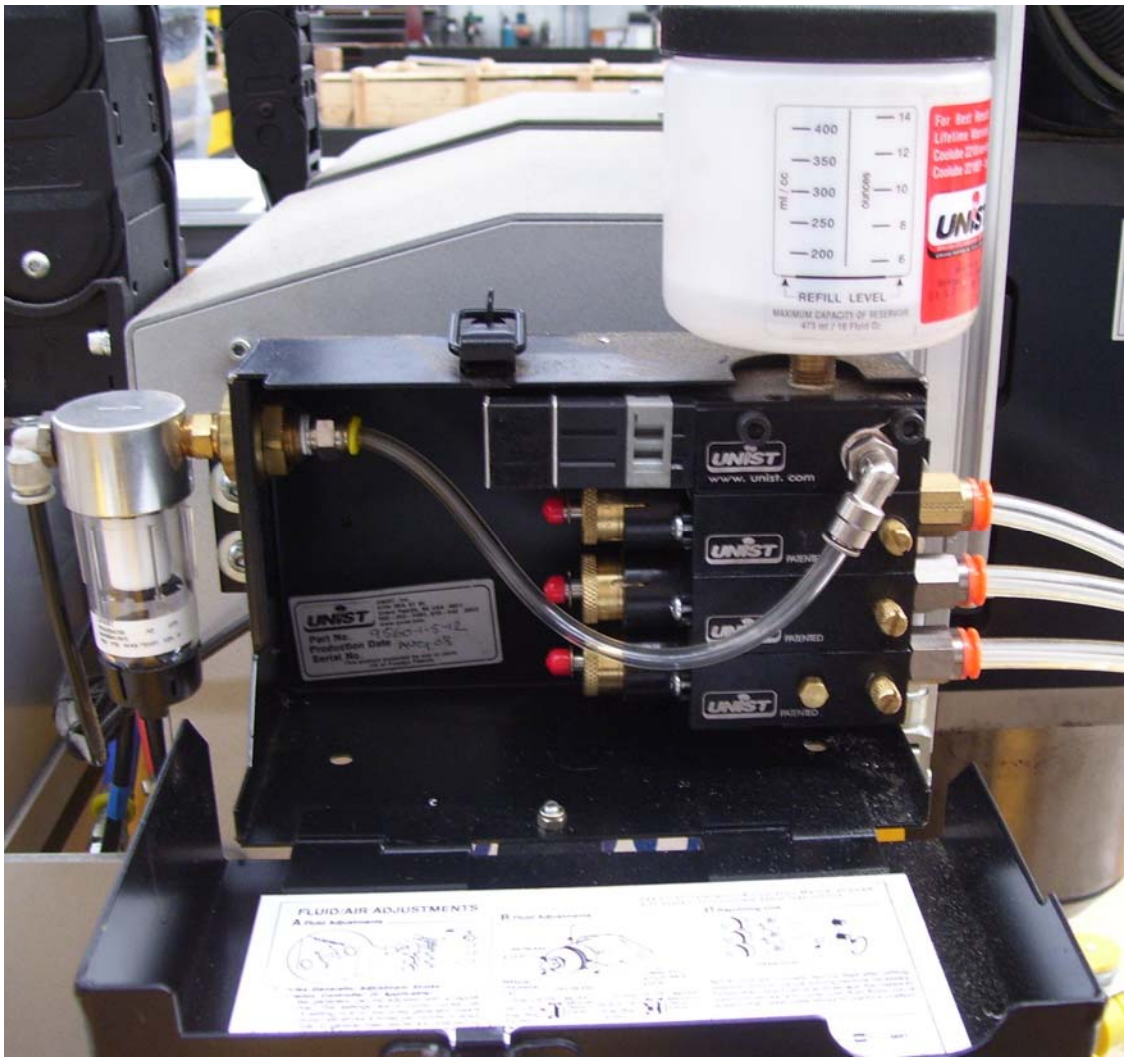

AIR DRYER AND PRESSURE BOOSTER

CHAIN DRIVEN DEBRI TROUGH

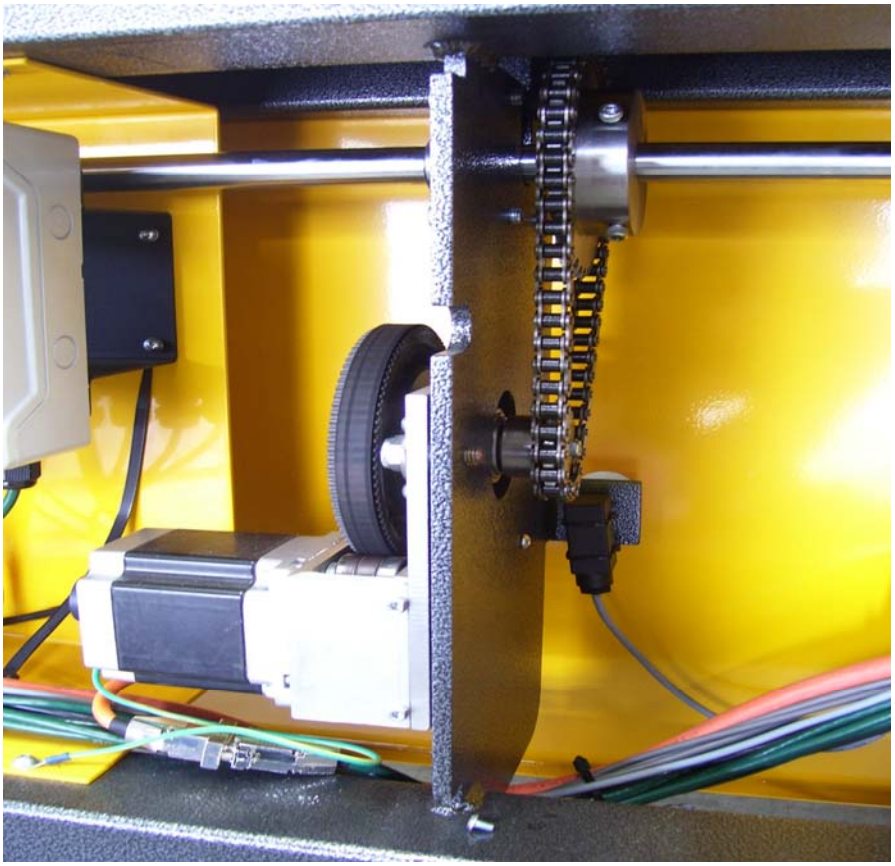

Advanced Robotic Technology

57 Trade St, Lytton Qld 4178
Ph: No 07 3393 6555 Fax 07 33935355

NCR No.

NCR

Date

Company Name

Contact Name

Contact Phone No.

Model Number

Fax No.

Priority

Very Urgent: Safety Issue

Important: Quality/Production Effected

Urgent: Production Stopped

Not Urgent: Modification Request

Material

Material Thickness

Feed Speed

Sample Available

Consumables used

Plasma Model

Problem

Action

Tech Name

Date Completed

Software claim

Hardware

Modification

Warranty

Action Taken