NEWMAR®

DC Power Onboard℠

Battery Chargers • Inverters • DC Converters • Power Supplies
DC Power Conditioners • Digital Meters/Instruments • Electrical Panels
DC Power Stabilizers • Test Equipment • Installation Accessories

2014/15

DC Power Onboard

Battery Chargers
Voltage/Power Range: 120/240 VAC Input, 12, 24, and 32 Volt Output, 7 - 95 Amps
Types: 3 Step Smart Chargers, Traditional SCR Charger's, Redundant Module Configuration

Inverters and Inverter-Chargers
Voltage/Power Range: 12 - 24 VDC/120 VAC
Outputs: 120 VAC, 1000 - 3000 Watts 12V/24 VDC, 50 - 120 Amps
Types: Sine Wave

Power Supplies
Voltage/Power Range: 120/240 Input, 12 and 24 VDC Output, 6 - 35 Amps
Types: Linear Regulated, Switch Mode

DC-DC Converters
Voltage/Power Range: 12, 24, & 48 Volt Input, 12 - 24 VDC Output, 6 - 50 Amps
Types: Step Down, Step Up, Stabilizing, Common Ground, Isolated

Power Conditioners
Voltage/Power Range: 12 - 24 VDC, 10 - 150 Amps
Types: Filters, Conditioners

DC UPS
Voltage/Power Range: 12 - 24 VDC, 10 - 40 Amps
Types: Mobile, Rack Mount

Power Distribution/Control
Voltage/Power Range: 120/240 VAC, to 15 kW 12 - 24 VDC to 500 Amps
Types: AC/DC Panels, Battery Isolators & Integrators, Power Source Selectors
Configurations: Panel Mount, Bulkhead Mount & Rack Mount

Solar Panels
Voltage/Power Range: 12/24 VDC, 20 - 210 watt
Configuration: Mobile and Fixed Site Mount


Battery Chargers


Power Distribution


Inverter-Chargers


DC UPS


DC Power Conditioners


Solar Panels


DC-DC Converters


Power Supplies


Enclosures

NEWMAR
DC Power Onboard™

Table of Contents

Battery Chargers

PT Series: 12V
Input: 115/230 VAC
Output: 7 - 80 Amps
Page 4

PT Series: 24 & 32V
Input: 115/230 VAC
Output: 8 - 95 Amps
Page 6

PTM Series: 24V
Input: 115/230 VAC
Output: 67 Amps
Page 8

Battery Chargers

PT Charger Monitor/Control Unit
Page 10

ABC Series: 12V
Input: 115/230 VAC
Output: 8 - 25 Amps
Page 11

Solar Panels: 12 & 24V
Output: 1.2 – 7.1 Amps
Page 12

NEWMAR

DC Power Onboard

Battery Chargers - Phase Three Series

Go to Webpage!

12 Volt

"Smart" battery charging technology for 12 volt systems aboard workboats, military vessels, commercial vessels, and recreational craft. These chargers interact with batteries providing the optimum three stage charge process for fast recovery and conditioning, maximizing performance and extending battery life.

A selector switch adjusts output voltage to adapt to gel-cell/flooded lead-acid/AGM battery types. An optional temperature compensation sensor also adjusts output for ideal voltage based on changes in the batteries' ambient temperature. All models are housed in a rugged stainless steel case with a durable white powder coat finish, and the internal circuitry is polyurethane coated for maximum corrosion resistance.

Features

- "Smart" circuitry provides three stage charging—bulk, absorption, float
- Gel-Cell/Flooded Lead-acid/AGM battery type switch selects optimum charge/float voltages
- Multiple isolated output banks; ammeter indicates total output current. (Except PT-7)
- Optional sensor adjusts output voltage based on battery temperature. (Except PT-7)
- Current limiting-prevents damage from overloading
- Clean well regulated output can be used as a power supply; can power loads directly without a battery in line
- Built to last—rugged stainless steel case with a durable white powder coat finish with an optional drip shield and marinized internal circuitry
- Protection: Current Limiting, Thermal Protection, Forced Air Cooling, Drip Shield
- ABS type approval for battery charging and power supplies

ABS
TYPE APPROVED PRODUCT

Battery Chargers - Phase Three Series

	12 Volt Models				
	PT-7	PT-14W	PT-25W	PT-40U	PT-80
Input VAC (50-60 Hz.)	88 - 132 176 - 264	85 - 264	90 - 132 180 - 264	90 - 264	90 - 264
Input Amps @ Full Load @ 115/230 VAC	2/1	2.8/1.4	6.5/4	6.8/3.4	12/7
Power Factor	>.65	.98@115V .93@230V	.7	.98@115V .95@230V	.98@115V .95@230V
Max Output Amps	7	14	25	40	80
Output Banks	2	3	3	3	3
Battery Capacity (A/H)	14 - 70	28 - 140	50 - 250	80 - 400	160 - 800
Operating Temp. Ref.	T-1	T-2	T-3	T-4	T-5
Case Size Reference	A-1	A-2	A-2	A-3	A-4
Weight: Lbs./Kg.	3.2/1.5	8/4	8.2/4	12/6	15.2/7
Sensor Model	N/A	TCS-12/24	TCS-12/24	TCS-12/24	TCS-12/24
Remote Panel	N/A	RP	RP	N/A	RP
Compliance Ref.	CG, CE	CG, CE, ABS	CG, ABS	CG, CE, ABS	CG, CE, ABS

Temperature Rating References

	Temperature	Derate Linearly From
T-1	-10°C to +45°C	100% @ 0°C to 80% @ -10°C
T-2	-10°C to +60°C	100% @ 40°C to 60% @ 60°C
T-3	-10°C to +60°C	100% @ 40°C to 60% @ 60°C
T-4	-20°C to +60°C	@ 50° to 60% @ 60°C
T-5	-20°C to +70°C	100% @ 45°C to 50% @ 70°C

Case Size References

	Inches			Centimeters		
Ref	H*	W	D*	H*	W	D*
A-1	10.5	5.0	2.8	26.7	12.7	7.1
A-2	11.2[A]	7.7	4.75[A]	31.8[A]	19.6	12.1[A]
A-3	13.85[B]	9.5	4.8[B]	35.2[B]	24.1	12.2[B]
A-4	14.8[C]	9.6	5.6[C]	37.6[C]	24.4	14.2[C]

**With Dripshield Installed:*
A Add 1.1" (2.8 cm) to height and .92" (2.3 cm) to depth
B Add .75" (1.9 cm) to height and 1.35" (3.4 cm) to depth
C Add 1" (2.54 cm) to height and .5" (1.27 cm) to depth

Nominal Output Voltages at Gel/Flooded Switch Settings (without Temperature Compensation)

Setting	Charge @ 50% load	Float @ .5 amp load
Gel-Cell	14.0 VDC	13.6 VDC
Flooded/AGM	14.2 VDC	13.4 VDC

Compliance References

CG: USCG CFR 183.410 (Ignition protected)
CE: Carries the CE mark
ABS: PT Series meet SVR 2009 4-8-3/5.9, Under 90 meters Rules 2006 4-6-4/7.19, and HSNC 2007 4-8-3/5.13.

Options

Remote Panel, model RP, for use with all models except PT-7

LED's indicate charger output stage. Manual reinitialization of three stage charge cycle. With 25' of cable. Panel dimensions: 3" H x 4.75" W.

Temperature Compensation Sensor, model TCS 12/24

-5 mV per cell °C. 25' cable (40' cable optional)

Battery Chargers - Phase Three Series

Go to Webpage!

24 & 32 Volt

ABS

"Smart" battery charging technology for 24 and 32 volt systems aboard, workboats, military vessels, commercial vessels, and recreational craft. These chargers interact with batteries providing the optimum three stage charge process for fast recovery and conditioning, maximizing performance and extending battery life.

A selector switch adjusts output voltage to adapt to gel-cell/flooded lead-acid/AGM battery types. An optional temperature compensation sensor also adjusts output for ideal voltage based on changes in the batteries' ambient temperature. All models are housed in a rugged stainless steel case with a durable white powder coat finish, and the internal circuitry is polyurethane coated for maximum corrosion resistance.

Features

- "Smart" circuitry provides three stage charging—bulk, absorption, float
- Gel-Cell/Flooded Lead-acid/AGM battery type switch selects optimum charge/float voltages
- Multiple isolated output banks; ammeter indicates total output current
- Optional sensor adjusts output voltage based on battery temperature
- Current limiting-prevents damage from overloading
- Use as a power supply; can power loads without a battery in line
- Built to last—rugged stainless steel case with a durable white powder coat finish with an optional drip shield and marinized internal circuitry
- Protection: Current Limiting, Thermal Protection, Forced Air Cooling, Drip Shield
- Install in conjunction with PT-MCU, see page 10 for additional control and monitoring
- ABS type approval for battery charging and power supplies

Options

Remote Panel

For use with all models except PT-24-60 and PT-32-25

Temperature Compensation Sensor, model TCS 12/24

-5 mV per cell °C. Sensor supplied with 25' cable (40' cable optional) and plug-in connector

NEWMAR

DC Power Onboard

Battery Chargers - Phase Three Series

	24 Volt Models						32 Volt Model
	PT-24-8W	PT-24-13W	PT-24-20U	PT-24-45U	PT-24-60W	PT-24-95U	PT-32-25W
Input VAC (50-60 Hz.)	85 - 264	90 - 132 180 - 264	85 - 135 170 - 270	90 - 264	207 - 253	90-264	104-126
Input Amps @ F.L. @ 115/ 230 VAC	2.8/1.4	6.5/4	6.8/4.3	12/7	NA/13	26/14	15/NA
Power Factor	.98@115V .93@230V	.7	.7	.98@115V .95@230V	.7	.98@115V .95@230V	.7
Max Output Amps	8	13	20	45	60	95	25
Output Banks	3	3	3	3	3	3	3
Battery Capacity (Amp-Hours)	16 - 80	26 - 130	40 - 200	90 - 450	120 - 600	180 - 950	50-250
Operating Temp. Refe.	T-1	T-2	T-3	T-5	T-4	T-5	T-4
Case Size	A-1	A-1	A-2	A-4	A-5	A-5	A-3
Weight: Lbs./Kg.	8/4	8/4	12/6	12/6	24.1/11	24.5/11	12.2/6
Sensor Model	TCS-12/24	TCS-12/24	TCS-12/24	TCS-12/24	TP	TCS-12/24	TP
Remote Panel	RP	RP	RP	RP	NA	RP	N/A
Compliance Ref.	CG, CE, ABS	CG, ABS	CG, CE, ABS	EN, CE, ABS	EN, CE, ABS	EN, CE, ABS	EN, CE

Temperature Rating References

Temperature		Derate Linearly From
T-1	-10°C to +60°C	100% @ 40°C to 60% @ 60°C
T-2	-10°C to +60°C	100% @ 50°C to 60% @ 60°C
T-3	-20°C to +60°C	@ 50° to 60% @ 60°C
T-4	-20°C to +50°C	Full output
T-5	-20°C to +70°C	100% @ 50°C to 50% @ 70°C

Case Size References

	Inches			Centimeters		
Ref	H*	W	D*	H*	W	D*
A-1	11.2[A]	7.7	4.75[A]	28.4[A]	19.6	12.1[A]
A-2	13.85[B]	9.5	4.8[B]	35.2[B]	24.1	12.2[B]
A-3	13.8[C]	9.8	5[C]	35[C]	24.9	12.7[C]
A-4	14.8[D]	9.6	5.6[D]	37.6[D]	24.4	14.2[D]
A-5	17.5[E]	12	7.2[E]	44.5[E]	30.5	18.3[E]

**With Drip Shield Installed*
A Add 1.1" (2.8 cm) to height and .92" (2.3 cm) to depth
B Add .75" (1.9 cm) to height and 1.35" (3.4 cm) to depth
C Add 1.27" (3.2 cm) to height and 1.1" (2.8 cm) to depth
D Add 1" (2.54 cm) to height and .5" (1.27 cm) to depth
E Add 2" (5.08 cm) to height and 1" (2.54 cm) to depth

Compliance References

UL: UL 1950 (per DNB report)
CG: USCG CFR 183.410 (Ignition protected)
EN: EN 60335-1
CE: Carries the CE mark
ABS: PT Series meet SVR 2009 4-8-3/5.9, Under 90 meters Rules 2006 4-6-4/7.19, and HSNC 2007 4-8-3/5.13.

Nominal Output Voltages at Gel/Flooded Switch Settings (without Temperature Compensation)

Setting	Charge	Float
24 Volt Models	**@ 50 % load**	**@ .5 amp load**
Gel-Cell	28.0 VDC	27.2 VDC
Flooded/AGM	28.4 VDC	26.8 VDC
32 Volt Model		
Gel-Cell	37.3 VDC	36.2 VDC
Flooded/AGM	37.8 VDC	35.7 VDC

Battery Chargers - Phase Three Modular

Go to Webpage!

A Battery Charging System with Redundant, Easily Replaced Charge Modules Providing High Reliability and Serviceability

The Phase Three Modular (PTM) Concept

The PTM charger provides a significant improvement in system reliability by utilizing multiple independent charger modules that plug into the unit, and should a fault occur in one module, the system continues to operate, thus is considered "fault tolerant".

The system consists of a wall mount case which serves as connection point to AC input and battery output, (3 bank) and contains three front-facing power bays, each accommodating a 22.5 amp charger module which slides and locks in place creating a 24V, 67 amp charger. If a module fault occurs, a front panel indicator and alarm relay is activated and the system continues operating on the other modules. A fourth bay houses the "smart" controller" circuit that provides 3 step charging, temperature compensation, system status LED's, alarm contacts and indicators. Should the controller suffer a fault, the charger will still operate at full power at float voltage mode. The controller module is also configured for easy plug in replacement in the field.

Vessel operators appreciate this system approach to reliability and serviceability whereby a fault in one of the modules is easily identified and it can be quickly replaced with an on-hand spare or an exchange unit from the factory, all the while the charging system and the vessel continue to operate.

ABS TYPE APPROVED PRODUCT

Reliability

- Redundant, independent 22.5 amp charger modules increase reliability – a malfunction of one does not disable the charging system; remaining modules continue to operate.

Serviceability

- Module change-out takes only minutes via plug and play configuration while the system continues to operate
- Technical personnel not required
- No need to remove the charger case from the boat or disconnect any wiring
- No inconvenience of power interruption to the boat

Features

- Three stage "smart" charging; bulk, absorption, float
- Battery type selector switch; gel-cell, lead-acid, AGM
- Temperature compensated output via sensor
- 24 Volt; 22-67 amps
- "Universal" input of 90-264 VAC, 50-60 Hz.–can be used anywhere in the world
- Powder coated stainless steel case
- ABS approved as redundant power system for essential services as well as a battery charger

Battery Chargers - Phase Three Modular

General System Specifications

Input

Voltage/Frequency: 90-264 VAC, 47-63 Hz, single phase; derate linearly from 100% output @ 105 VAC to 80% output @ 90 VAC

Amperage: 18 @ 120 VAC; 9 @ 230 VAC

Power Factor: .96-.99

Efficiency: 85% typical

Output

Output Amps: 67 total

Nominal Charge/Float Voltages: Gel-Cell: 28.0 VDC @ 50% load/ 27.2 @ .5A load; Flooded/AGM: 28.4 @ 50% load/26.8 @ 5A load

Temperature Compensation (Option): - 5 mV per cell per °C (typical), requires optional sensor model TCS-12/24

Battery Banks: 3

Recommended Battery Type/Capacity: Gel-Cell, Flooded or Sealed Lead-Acid, 120-600 A-H

Status Indicators/Signal Outputs

Output OK, No Output, Check System, Battery Too Hot, Total Output Bar Graph, Output Voltage Test Points, Contacts for Optional Remote Alarm

Temperature Rating

0-60° C; derate linearly from 100% output @ 50° C to 80% output @ 60° C

Mechanical

Case Material: Powder Coated Stainless Steel

Weight: With three modules installed: 34 lbs/15.5 kg.; **Empty:** 16 lbs/7.3 kg.

Cooling: Forced air per module

PTM-24-22 Power Module slides and locks in place in wall mount case.

Individual Module Specifications

Model: PTM-24-22 (24 volt)

Input Voltage/Frequency: 90-264 VAC; 47-63 Hz; derate linearly from 100% output @ 105 VAC to 80% output @ 90 VAC

Input Current: 3 amps @ 230VAC; 6 amps @ 115 VAC

Output Current: 22.5 amps max in Bulk Phase; 20 amps max in Absorption/Float Phases

Power Factor: .96-.99

Efficiency: 85% typical

Protection Features: Input Fuse, Output Fuse, Current Limiting, Over Voltage Protection, Cooling Fan, Automatic Thermal Shutdown/Recovery

Status Indicators: Output OK/FAULT

Weight: 6 lbs.

Optional Accessories

Temperature Compensation Sensor: Model TCS-12/24 with 25' of cable

Compliances

ABS type approved redundant power system for essential services and as a battery charger, CE Mark, UL Recognized; E183223, Level 3
Safety: EN60950-1 USA, Canada, Europe EMI Radiated and Conducted: FCC Part 15 Level A; EN55022 Class A

Model	Modules Installed	Max Output Amps	Max Input Amps @ 115/230 VAC	Dimensions (H x W x D) Inches	Dimensions (H x W x D) Centimeters	Weight Lbs.	Weight Kgs.
PTMS-24-67	3	67	18/9	20.9 x 10.9 x 8.8	53.1 x 27.7 x 22.4	35	16

PT Charger Monitor/Control Unit

Go to Webpage!

Designed for installation in conjunction with most models of PT Battery Chargers, this unit provides additional functionality of monitoring, control, and alarms. It contains a Digital DC volt meter with 3 battery bank sense selector, a dial that adjusts the PT charger float voltage, and AC Master circuit breaker for control and protection of charger input power.

A 10 foot wiring harness is provided for AC input and DC monitor wiring to the charger. The unit carries ABS type approval for Charging Systems, thus providing full compatibility when paired with PT chargers which are also ABS Type approved.

Features

- Digital readout of 3 battery bank voltages to 1/10th volt
- Adjustable DC high/low voltage alarm
- Output float voltage adjustment pot; permits fine tuning from -4% to +5%
- AC circuit breaker (30A, double pole) provides overcurrent protection and manual disconnect
- AC power ON indicator light
- 10' wiring harness for easy connection of PT Series Charger
- Compatible with: PT-14W, PT-25W, PT-40U, PT-80, PT-24-8W, PT-24-13W, PT-24-20U, PT-24-45U, PT-24-95U, and PTMS-24-67

ABS
TYPE APPROVED PRODUCT

Options

- 120 or 240 VAC AC failure contact
- Relay for DCV remote alarms (model DIR, see page 59 for info)
- Harness to length

Mechanical

- Anodized aluminum case
- Heavy duty top and bottom mounting flanges
- Waterproof wire cord grips
- Case Size (H x D x W)
  Inches: 8.7 x 4.6 x 5.5
  Centimeters: 22.1 x 11.6 x 14
- Weight (Lbs./Kg.): 5.5/1.6

Model
PT-MCU

PT-MCU - PT Charger Interface Typical Wiring Configuration

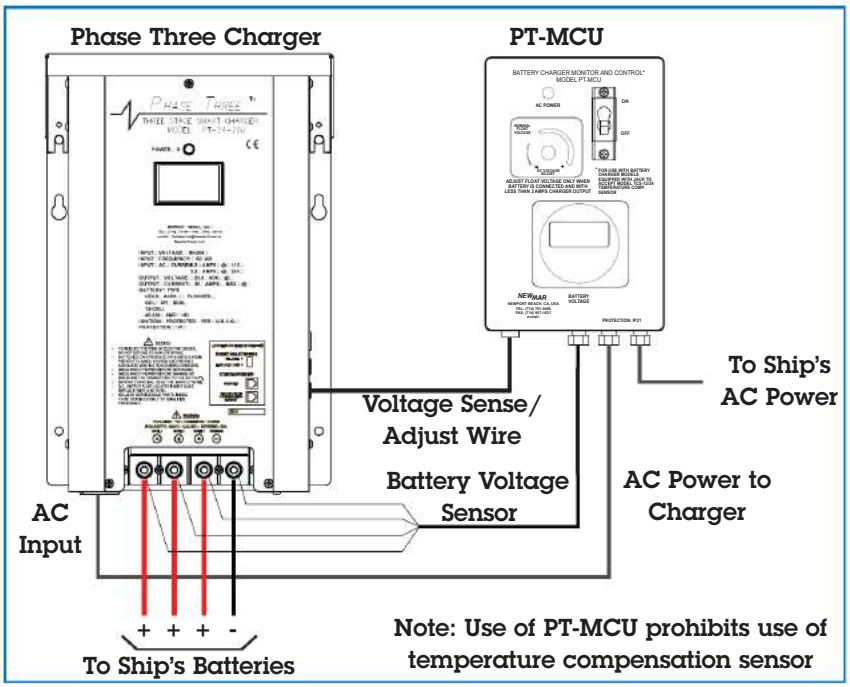

NEWMAR

DC Power Onboard

Battery Chargers - ABC Series

Go to Webpage!

ABC Series

The ABC Series chargers utilize time tested SCR charging circuitry, individually sensing and regulating each of 2 isolated battery banks, allowing the user to leave the charger operating indefinitely, even under no-load conditions without fear of overcharging. These chargers are ideal for vessels or vehicles which have an intermittent demand for battery power.

(For battery systems which require high continuous output, see our Phase Three Chargers on **pages 4-8**).

These chargers are housed in a rugged, powder coated aluminum, heat-sink case which extracts heat without introducing dust and moisture to the inside of the unit.

ABC 12-25

ABC 12-8

The rugged and reliable ABC charger is employed in hostile environments throughout the world in recreation and commercial marine applications, off-shore oil platforms, in mining equipment, emergency service vehicles and rugged off-road applications.

Features

- Total output ammeter
- Dual independently regulated output banks
- On-off switch and power "on" indicator light
- Vibration absorbing mounting grommets
- Powder coat aluminum case
- 115/230 VAC input selector switch
- Auto-reset thermal breaker
- Conformal coating of circuit board

Specifications

Model	Input	Amps @ F. L.	Output Volts	Output Banks	Output Amps	Dimensions (H x W x D)	Weight
ABC 12-8	105-125 VAC or	1.5/.75	12	2	8	8" x 6" x 4.2"	9 Lbs.
ABC 12-25	210-250 VAC, 50-60Hz	5/2.5	12	2	25	11.9" x 4.7" x 6.2"	14 Lbs.

Typical Charge Curves ABC Series

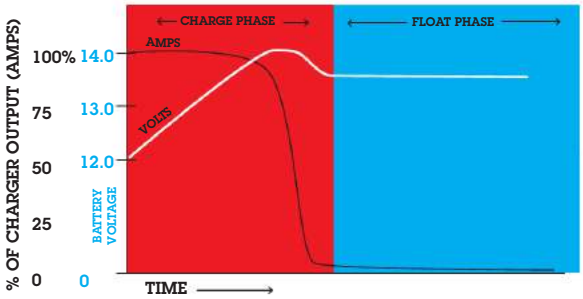

Duty Cycle Ratings: Rated Charging Output 20 min., derate to 50% for continuous output

Operating Temperature: 0 - 40° C

Float Voltage: 13.4 VDC

Solar Panels - Standard Systems

Go to Webpage!

Features

- Industrial grade panel, components and heavy duty mounts
- Numerous size panels match available space (1.2 to 7+A); panels can be wired for higher output
- Voltage controller adapts to properly charging different battery types
- Kits contain parts needed for various types of installations
- 12 and 24VDC systems

Standard Kits

Model	Electrical		Dimensions			Weight
	DC Volts	DC Amps	H	W	D	Lbs.
SP 20	12	1.2	0.98″	13.8″	21.7″	6.2
SP 45	12	2.5	1.38″	21.0″	26.2″	11.0
SP 65	12	3.7	1.38″	21.3″	38.9″	13.2
SP 80	12	4.9	1.38″	26.3″	39.9″	19.8
SP 100	12	5.9	1.38″	26.3″	39.9″	19.8
SP 120	12	7.0	1.97″	26.0″	57.7″	26.5
SP-24-40	24	1.2	1.38″	21.1″	26.2″	11.0
SP-24-60	24	1.7	1.38″	21.3″	38.9″	15.4
SP-24-85	24	2.5	1.38″	26.3″	38.9″	19.8
SP-24-120	24	3.6	1.97″	26.0″	57.7″	26.5
SP-24-210	24	7.1	1.97″	39.1″	64.6″	39.7

Kit Includes

Detailed instructions and parts assuring professional installation, eliminates installer guess work and parts sourcing.

- Industrial grade solar panel with 10 year warranty
- Charge controller with temperature compensated, three step output and battery type selection (Flooded/AGM)
- Heavy duty mounting system
- 20 foot duplex wire, terminals and cable ties
- Waterproof wire feed-through fitting
- Mounting hardware included for various installations

NEWMAR

DC Power Onboard

Solar Panels - Custom Systems

Use the following selection guide to configure the components needed for a custom system.

Process:

1) Select number and sizes of 12 or 24V solar panels to meet your power and space requirements.
   Note, you may mix sizes of panels within voltage range.
2) Add up the amperage of the selected panels.
3) Select controller that exceeds the total DC amp output of the panels selected.
4) Specify the part numbers of the panels and controller selected on your order.
   Note, mounting hardware, wire, and wire feed through fitting is included with each panel.

12V Systems

12V Solar Panels

Model	Electrical		Dimensions			Weight
	DC Volts	DC Amps	H	W	D	Lbs.
SP 20	12	1.2	0.98″	13.8″	21.7″	6.2
SP 45	12	2.5	1.38″	21.0″	26.2″	11.0
SP 65	12	3.7	1.38″	21.3″	38.9″	13.2
SP 80	12	4.9	1.38″	26.3″	39.9″	19.8
SP 100	12	5.9	1.38″	26.3″	39.9″	19.8
SP 120	12	7.0	1.97″	26.0″	57.7″	26.5

12V Controllers

Model	Electrical		Dimensions			Weight
	DC Volts	DC Amps	H	W	D	Lbs.
SC-12-10	12	10	6.0″	2.2″	1.3″	1
SC-12-20	12	20	6.0″	2.2″	1.3″	1
SC-12/24-30	12	30	6.0″	4.14″	2.17″	1

24V Systems

24V Solar Panels

Model	Electrical		Dimensions			Weight
	DC Volts	DC Amps	H	W	D	Lbs.
SP-24-40	24	1.2	1.38″	21.1″	26.2″	11.0
SP-24-60	24	1.7	1.38″	21.3″	38.9″	15.4
SP-24-85	24	2.5	1.38″	26.3″	38.9″	19.8
SP-24-120	24	3.6	1.97″	26.0″	57.7″	26.5
SP-24-210	24	7.1	1.97″	39.1″	64.6″	39.7

24V Controllers

Model	Electrical		Dimensions			Weight
	DC Volts	DC Amps	H	W	D	Lbs.
SC-24-10	24	10	6.0″	2.2″	1.3″	1
SC-24-20	24	20	6.0″	2.2″	1.3″	1
SC-12/24-30	24	30	6.0″	4.14″	2.17″	1

Contact factory for other panels and controllers not listed above.

Inverter-Chargers

PS Series Inverters

Input: 12 or 24 VDC
Output: 120 VAC,
1000 - 2000 Watts

Page 15

IC Series Inverter-Chargers

Input: 12 or 24 VDC
Output: 120 VAC,
1800 - 4800 Watts

Page 16

Torque Inverter-Charger Series

Input: 12 or 24 VDC
Output: 115 VAC, 60Hz., 1000 – 3600 Watts

Page 18

Inverters - PS Series

Go to Webpage!

The PS Series inverters produce high efficient, pure sine wave output from 12 or 24 volt battery input with high surge power for motor start making it ideal for marine applications. A power saving mode, with user friendly adjustable set points, conserves batteries when not in use. A remote control/ display panel and front panel indicator lights allows for easy analysis and control.

Features

- 1000, 1500, 2000W models
- Pure sine wave 115V output
- 12V input
- High efficiency ~ 90%
- Power saving mode conserves battery when not in use, user adjustable set points
- AC duplex outlet on front panel
- Status indicators lights on front panel:
  - Input voltage
  - Output power level
  - Power Mode
  - Fault status
- Remote control/display included
  - Protection
  - Low input voltage
  - Overload
  - Short circuit
  - Overtemp
- Meets UL458
- Rugged compact case, ideal for marine applications

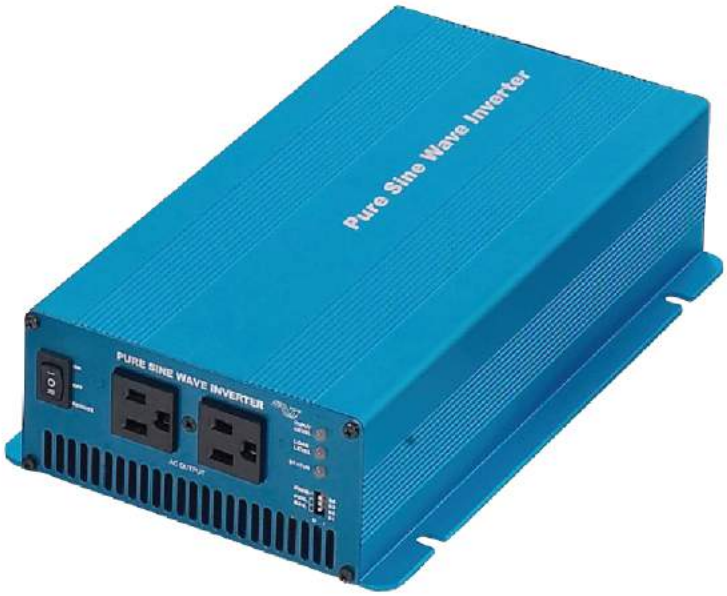

Remote Panel Included

Description	Input	AC Out Continuous	AC Out Surge	Dimensions/Weight			
				H	W	D	Lbs.
12-1000 PS	12V	1000W @ 115V	2000W	3.46″	7.17″	15.08″	8.8
12-1500 PS	12V	1500W @ 115V	3000W	3.46″	7.52″	16.34″	10.5
12-2000 PS	12V	2000W @ 115V	4000W	6.53″	8.22″	14.5″	12.2
24-1000 PS	24V	1000W @ 115V	2000W	3.46″	7.17″	15.08″	8.8

Inverter-Chargers

Go to Webpage!

A Complete Line of High Power DC-AC Inverters with Built-in Battery Chargers.

The circuitry of these Inverter/Chargers incorporates a technology which is field-proven and was carefully refined for years in both harsh industrial and sensitive utility applications. Now this rugged design is offered for marine applications where reliability and performance are paramount, and low noise operation has become a critical factor in the boat owner's choice of power products

While incorporating numerous important features these inverter/chargers are engineered with a high functionality approach that installers will appreciate. All connectors and mounts are heavy duty commercial grade.

Five models are available for use with 12 or 24 volt battery systems and provide continuous rated AC power ranging from 1800 to 4800 watts at 115 VAC-60 Hz.

Called the "**Perfect Wave**" Series, these inverter-chargers deliver pure, sinusoidal* AC for flawless operation of all appliances and sensitive electronics. They are ideal for entertainment systems and micro-processor-based equipment such as computers which are intolerant to AC wave distortion.

All models incorporate a built-in automatic transfer switch which activates multi-stage battery charger for rapid and safe replenishment of the inverter battery bank whenever shore or generator AC power is available.

All models feature numerous circuit and safety protections, such as thermally controlled cooling fans, low voltage cutout, thermal and overload protection and ground fault interruption, and are housed in rugged powder coated aluminum cases suitable for permanent horizontal or bulkhead mounting. An optional remote indicator and control panel is available for all models.

Features

- Rugged hostile environment-proven circuitry generates "Perfect Wave" AC for powering any appliance, from wattage-hungry refrigeration to highly input-sensitive computers, electronic controllers/processors.
- Built-in high output charger for rapid battery bank replenishment— all models feature three stage, temperature compensated charger with output programmable for gel-cell, flooded lead-acid or AGM battery type, and amp-hour capacity selector for proper charging in various applications.
- Internal charger is activated by an automatic transfer relay via remote sensor whenever external AC power is available. Optional Battery Integrator permits charging of multiple banks
- UL listed with full two year warranty
- Designed for maximum ease of installation and operation - installer and user-friendly. Large DC input terminal blocks and front panel GFCI protected outlet receptacles. AC output from the inverter may also be hard-wired.
- All important aspects of inverter and charger operation clearly displayed with front panel status indicators-optional remote panel available.
- Numerous safety and circuit protections: short circuit, overload, over-temperature, ground fault protection, output circuit breaker
- Thermally controlled cooling fan prolongs life of components
- Automatic low voltage shutdown circuit prevents damage to batteries due to over-discharge when using inverter function.
- Heavy duty powder coated aluminum construction and polyurethane coated internal circuitry—built to last in the harsh marine environment.

Model	12-1800IC	12-3000IC	24-2200IC	24-4800IC
Inverter Output @ 120VAC, 60Hz.				
Watts (Surge)	4000	6500	6,500	14,000
Watts (Cont.)	1,800	3,000	2,200	4,800
Wave Type	Pure Sine	Pure Sine	Pure Sine	Pure Sine
Inverter Input:				
VDC	11 - 14	11 - 14	22 - 28	22 - 28
Max. Amps	180	300	110	240
Charger Input:				
VAC	115V, 60 Hz.	115V, 60 Hz.	115V, 60 Hz.	115V, 60 Hz.
Max. Amps	15	20	15	40
Charger Output				
Max Amps @ V	85A@12V	105A@12V	40A@24V	105A@24V
Type	Three Stage	Three Stage	Three Stage	Three Stage
Case				
Case Size Ref. (H x W x D)	7.5" x 16" x 15.5"	10" x 17" x 16"	7.5" x 16" x 15.5"	10" x 17" x 16"
Weight (Lbs./Kgs.)	54/25	75/35	54/25	75/35

Options/Accessories

- Remote control and indicator panel; available with 25' or 50' of cable
- Duplicates all status indicators found on unit front panel and allows remote ON/OFF capability
- Battery Integrator, Models BI-100 and BI-24-100, enables charging of multiple isolated battery banks, see page 39
- AC and DC energy monitors, see page 58-59
- Inverter info center panel blanks
- High current fuse assembly, see page 66

Optional Remote Control and Indicator Panel, model ICR-2-(specify 25 or 50 feet of cable)

Charger Characteristics

Three stage "smart charger"; programmable via selector switch for gel, flooded lead-acid or AGM battery type; temperature compensated. Output voltage temperature compensated via a provided battery temp sensor with 20' cable.

Operating Temperature

-22° C to +40° C (0° F to 104° F)

Inverter Regulation

120 VAC RMS (110V - 127V)

Protection Features (all models)

- Automatic low battery shutdown
- Output circuit breaker
- Auto high temperature shutdown/recovery
- Overload protection

Mechanical Features (all models)

- Thermally controlled cooling fan
- Dual GFCI protected duplex outlet
- AC hard-wire (optional)
- Powder coated aluminum case with shelf of bulkhead mounting flanges
- Polyurethane coated printed circuit boards

Inverter-Chargers - Torque Series

Go to Webpage!

New!

High Power DC-AC Inverters with Built-in Battery Chargers.

The "**Torque**" Series (TQ) incorporates all the ruggedness and reliability of the perfect wave series but with upgraded electronics that provide higher peak power, efficiency, protection and a high power density resulting in a reduction in case size. Diagnostic monitor panel with power limit programming is built-in with an optional full function LCD text display.

Six models for use with 12 and 24 volt battery systems provide continuous rated AC power ranging from 1000 to 3600 watts at 115 VAC-60 Hz., and battery charging 60 - 150 amps.

TQ inverter-chargers deliver high surge capability for starting motor loads and pure, sinusoidal AC for flawless operation of all appliances and sensitive electronics. They are ideal for entertainment systems and micro-processor-based equipment such as computers which are intolerant to AC wave distortion.

Whenever shore or generator AC power is available, a built-in automatic transfer which activates the multi-stage battery charger for rapid and safe replenishment of the inverter battery bank.

Protection features include thermally controlled cooling fans, low voltage cutout, thermal and overload protection and ground fault interruption, built in rugged powder coated aluminum case suitable for permanent horizontal or bulkhead mounting. A front panel LED display provides basic diagnostics and voltage data. It can also be removed and installed as a remote. An optional LCD remote indicator and control panel is available for all models.

Features

- Rugged hostile environment-proven circuitry generates AC for powering any appliance, from wattage-hungry refrigeration to highly input-sensitive computers, electronic controllers/processors.
- Built-in high output charger for rapid battery bank replenishment — feature three stage, temperature compensated charger with output programmable for gel-cell, flooded lead-acid or AGM battery type, and amp-hour capacity selector for proper charging in various applications. Will charge batteries that have been discharged to zero volts.
- Programmable AC input power limiting avoids nuisance tripping of shore power breakers when limited power is available
- Internal charger is activated by an automatic transfer relay via remote sensor whenever external AC power is available. Optional Battery Integrator permits charging of multiple banks
- Transfer switch does not require DC voltage to function - can charge totally dead batteries
- Designed for maximum ease of installation and operation - installer and user-friendly. Large DC input terminal blocks and front panel GFCI protected outlet receptacle. AC output from the inverter may also be hard-wired.
- All important aspects of inverter and charger operation clearly displayed with front panel status indicators which can also be mounted as a remote
- Numerous safety and circuit protections: short circuit, overload, over-temperature, ground fault protection, output circuit breakers
- Thermally controlled, low noise cooling fan prolongs life of components
- Automatic low voltage shutdown circuit prevents damage to batteries due to over-discharge when using inverter function.
- Heavy duty powder coated aluminum construction and polyurethane coated internal circuitry—built to last in the harsh marine environment.
- UL listed with two year warranty

Inverter-Chargers - Torque Series

Models	1000TQ-12	1500TQ-12	2000TQ-12	3000TQ-12	2400TQ-24	3600TQ-24
Inverter Output @ 120VAC, 60Hz.						
Watts (Surge)	1,500	2,500	4,500	5,500	5,000	8,000
Watts (Cont.)	1,000	1,500	2,000	3,000	2,400	3,600
Wave Type	Sine	Sine	Sine	Sine	Sine	Sine
Inverter Input:						
VDC	10.5 - 17	10.5 - 17	10.5 - 17	10.5 - 17	21 - 30	21 - 30
Max. Amps	104	147	204	315	250	400
Charger Input:						
VAC - 60 Hz.	95-135V	95-135V	95-135V	95-135V	95-135V	95-135V
Max. Amps	8	12	16	22	20	23
Charger Output 3 Stage						
Max Amps @ V	60A@12V	75A@12V	125A@12V	150A@12V	75A@24V	90A@24V
Case						
Case Size Ref.	C-1	C-1	C-2	C-3	C-4	C-5
Weight (Lbs./Kgs.)	40/18.2	40/18.2	40/18.2	68/30.8	40/18.2	68/30.8

Charger Characteristics

Three stage "smart charger"; programmable via selector switch for gel, flooded lead-acid or AGM battery type; Output temperature compensated via a provided battery temp sensor with 20' cable.

Options/Accessories

- Remote LCD monitor and control indicator panel
- Battery Integrator, Models BI-100 and BI-24-100, enables charging of multiple isolated battery banks, see page 39
- AC and DC energy monitors, see pages 58-59
- High current fuse assembly, see page 66
- Circuit Breakers, see page 64

Optional Remote LCD Monitor & Control Indicator Panel

5.75" x 3.75"

Specifications

Operating Temperature:
-20° C to +65° C (0° F to 149° F)

Inverter Regulation: 120 VAC RMS (110V - 127V)

Transfer Time: ≤20 ms

Protection Features

- Automatic low battery shutdown
- Output circuit breaker
- Auto high temperature shutdown/recovery
- Overload protection

Mechanical Features (all models)

- Thermally controlled cooling fan
- AC hard-wire and dual GFCI protected duplex outlet
- Powder coated aluminum case with mounting flanges
- Polyurethane coated printed circuit boards for corrosion resistance

Case Size Reference

Case	Inches			Centimeters		
	D	W	H	D	W	H
C-1	12.0	13.4	5.7	30.5	34.0	14.5
C-2	13.4	13.4	5.7	34.0	34.0	14.5
C-3	14.8	16.0	8.0	37.6	40.6	20.3
C-4	12.0	14.5	5.7	30.5	36.8	14.5
C-5	13.8	17.1	8.0	35.1	43.4	20.3

DC Converters

Go to Webpage!

Standard Series
Input: 24 - 32 VDC,
Negative Ground
Output: 12 or 24 VDC,
3 - 50 Amps

Page 22

Go to Webpage!

Isolated & Spike Protected Series
Input: 24, 36, 48, 72 or 110 VDC,
Positive or Negative Ground
Output: 12 or 24 VDC, 6 - 35 Amps

Page 24

Go to Webpage!

12→24V Step-Up Converters
Input: 10-15 VDC,
Output: 27.2 VDC, 7 - 18 Amps

Page 26

NEWMAR

DC Power Onboard

DC Converters

Photo: John Fleck

NEWMAR

DC Power Onboard

DC-DC Converters - Standard Series

Go to Webpage!

Convert 20-50 VDC input to 12 or 24 VDC negative ground output for powering communication/ navigation equipment, on negative ground systems. (See Isolated series, page 22, for positive ground applications.) Ideal for powering voice, data and navigation electronics in marine applications.

Features

- Excellent Regulation: Output voltage maintained within 1% under all line and load conditions within rating.
- Heat generated by semi-conductors is extracted and dissipated by large heat sink fins that maximize air contact for cool operation and long life of components.
- Polyurethane conformal coating on PC boards and corrosion-resistant anodized aluminum case with heavy duty shock mounts assure survival in hostile environments.
- Numerous converter and load protection circuits:
- Current limiting
- Automatic thermal shutdown
- Short circuit proof
- Reverse polarity
- Overvoltage protection
- Carries CE mark

Model	Input voltage	Output voltage	Output Amps		Case Size	Weight	
			Intermittent	Continuous		(Lbs)	(Kg.)
24-12-3	17-32	13.6	3	3	C-6	1	.45
32-12-6	20-50	13.6	6	6	C-5	2.5	1.1
32-24-6	32-50	24.5	6	6	C-5	2.5	1.1
32-12-10	20-50	13.6	10	10	C-1	4	1.8
32-24-10	32-50	24.5	10	10	C-1	4	1.8
32-12-15	20-50	13.6	15	15	C-1	5	2.3
32-24-15	32-50	24.5	15	15	C-1	5	2.3
32-12-25	20-50	13.6	25	20	C-2	7.5	3.4
32-24-25	32-50	24.5	25	20	C-2	7.5	3.4
32-12-35	20-50	13.6	35	30	C-3	12	5.5
32-24-35	32-50	24.5	35	30	C-3	12	5.5
32-12-50	20-50	13.6	50	40	C-4	16	7.3
32-24-50	32-50	24.5	50	40	C-4	16	7.3

DC-DC Converters - Standard Series

Specifications

Output: 13.6 VDC (internally adjustable 12.6 -14.5) or 24.5 VDC (or specify) except 24-12-3

Ripple: 150 mV P-P maximum

Regulation: 1% Line/Load

Duty Cycle Ratings*:
Intermittent: 20 minutes max on time, 20% duty. Current limit set at approx. 105% of intermittent rating.
Continuous: 24 hours, 100% duty *24-12-3: 2 minute max. on time

Idle Current: Less than 100 mA (including power "ON" light)

Operating Temp:
0-50° C, Derate Linearly From 100% @ 40° C To 50% @ 50° C.
Thermal shutdown @ 70° C Case Temperature
Model 24-12-3: Full output -25° to +30° C; Derate linearly from 100% @ +30° C to 45% @ +50° C

Switching Frequency: 40 Khz

Efficiency: 85% - Typical.

Isolation: Output/Chassis; Input/Chassis: 250 VDC

Mechanical

- Powder coated aluminum heat sink case
- Front panel terminal block
- Heavy duty mounting flange
- Conformal coated PC board

Options

- Operation as battery charger or parallel redundant operation* – derate to continuous duty rating (contact factory)
- Extreme vibration mounting kit. (Information below) * Except Model: 24-12-3

Case Size

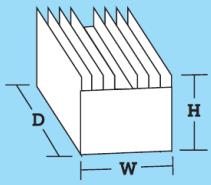

Case	Inches			Centimeters		
	H	W	D	H	W	D
C-1	4.5	5.9	11.0	11.4	15.0	27.9
C-2	6.0	4.7	14.0	15.2	11.9	35.6
C-3	6.0	4.7	16.0	15.2	11.9	40.6
C-4	6.2	6.8	18.1	15.7	17.3	46.0
C-5	2.8	4.2	10.4	7.1	10.7	26.4
C-6	3.5	3.5	1.75	8.9	8.9	4.5

Option: Extreme Vibration Mounting Kit

The Extreme Vibration Mounting Kit is available to protect NEWMAR power converters from the extreme stresses of shock and vibration when mounted on high vibration vehicles.

The kit (pictured here) replaces the standard vibration kit provided with the unit and fits into the unit's mounting flange to act as a "super shock absorber" for electronics in high vibration applications. It is available to fit all NEWMAR units from 2 to 70 lbs. Specify KIT–L for units which weigh 2–15 lbs. and Kit–H for units which weigh 16-70 lbs.

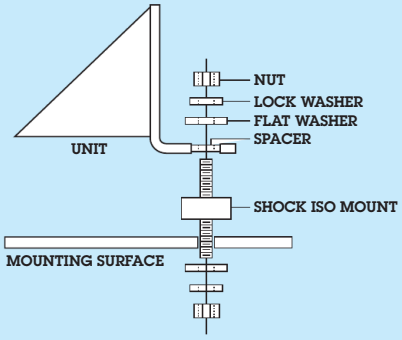

DC-DC Converters - Isolated Series

Go to Webpage!

The Isolated series provides voltage conversion as well as input/output isolation, allowing use of negative ground gear to positive or floating ground battery systems, or vice versa. Many models may also be used as 12 or 24 volt stabilizers for highly input voltage sensitive equipment.

Using an Isolated Converter as a voltage stabilizer on 12 or 24 volt systems can solve conducted noise and interference problems on sensitive DC powered devices communication, navigation systems, and DC micro-processor based devices.

Features

- Wide range of input voltage
- Precise output voltage regulation
- Reverse polarity
- Input fuse/Output fuse
- Total input/output isolation, pos. or neg. ground
- Current limiting, short circuit proof output
- Automatic re-setting thermal shutdown
- High/low input voltage shutdown
- Polyurethane conformal coating on PC board
- Power "ON" light
- Rugged case designed for high vibration applications

Model	Input Voltage	Max Input Amps	Output Voltage	Output Amps		Case Size	Weight	
				Intermittent	Continuous		Lbs	Kg
12-12-12I	10-16**	19.2	13.6	12	8	C-2	6	2.7
12-24-6I	10-16**	19.2	24.5	6	4	C-2	6	2.7
12-12-35I	10-16**	56	13.6	35	20	C-3	12	5.5
12-24-18I	10-16**	56	24.5	18	10	C-3	12	5.5
48-12-6I	20-56	4.8	13.6	6	6	C-1	7	2.7
48-24-3I	20-56	4.8	24.5	3	3	C-1	7	2.7
48-12-12I	20-56	9.6	13.6	12	8	C-2	6	2.7
48-24-6I	20-56	9.6	24.5	6	4	C-2	6	2.7
48-12-18I	20-56	14.4	13.6	18	10	C-2	8	3.6
48-24-9I	20-56	14.4	24.5	9	5	C-2	8	3.6
48-12-35I	20-56	28	13.6	35	20	C-3	12	5.5
48-24-18I	20-56	28	24.5	18	10	C-3	12	5.5

***11.5 VDC minimum start-up voltage, then operates @ 10-16 VDC from 1 amp minimum to full load*

Specifications

Output: 13.6 VDC (internally adjustable 12.6 -14.5) or 24.5 VDC (or specify)

Ripple: 150 mV P-P maximum

Regulation: 1% Line/Load

Duty Cycle Ratings: Intermittent - 20 minutes max on time, 20% duty. Current limit set at approx. 105% of intermittent rating. Continuous - 24 hours, 100% duty

Idle Current: Less than 100 mA (including power "ON" light)

Operating Temp: 0-50° C, Derate Linearly From 100% @ 40° C To 50% @ 50° C. Thermal shutdown @ 70° C Case Temperature.

Switching Frequency: 40 Khz.

Efficiency: 85% - Typical.

Isolation – Output/Chassis; Input/Chassis: 250 VDC

Mechanical

- Anodized aluminum heat sink case
- Front panel terminal block
- Heavy duty mounting flange
- Conformal coated PC board

Options

- Operation as battery charger or parallel redundant operation* – derate to continuous duty rating (contact factory)
- Extreme vibration mounting kit. (Information below)

Case Size

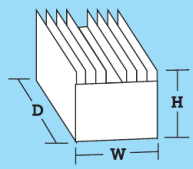

Case	Inches			Centimeters		
	H	W	D	H	W	D
C-1	4.25	5.9	7.7	10.8	15.0	19.6
C-2	4.25	5.9	14.0	10.8	15.0	35.6
C-3	6.0	6.8	16.5	15.2	17.3	41.9

Option: Extreme Vibration Mounting Kit

The Extreme Vibration Mounting Kit is available to protect NEWMAR power converters from the extreme stresses of shock and vibration when mounted on high vibration vehicles.

The kit (pictured here) replaces the standard vibration kit provided with the unit and fits into the unit's mounting flange to act as a "super shock absorber" for electronics in high vibration applications. It is available to fit all NEWMAR units from 2 to 70 lbs. Specify KIT–L for units which weigh 2–15 lbs. and Kit–H for units which weigh 16-70 lbs.

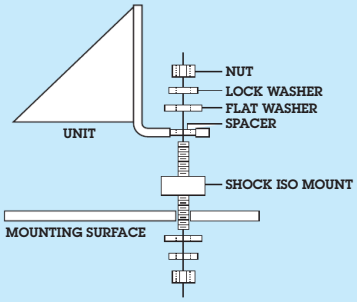

12 → 24V Step-Up Converters

Go to Webpage!

12-24-16
Standard,
Non-Isolated

12-24-18I
Isolated

These "UP" converters produce 24 volts from 12 volt systems and are ideal for managing dual voltage applications on vessels and vehicles without having to install a 24 volt battery and dedicated charging system. Choose from two types depending on your application:

In the **Standard, Non-Isolated Series** the 12V input and 24V output share a common negative ground and are ideal when installing certain electronics that operate better on 24 volts when a robust 12 volt system exists. Models available in outputs of 7, 16 and 25 amps.

The **Isolated Series** allows compatibility between positive and negative ground systems, for example installing negative ground 24V electronics on a 12V floating ground aluminum vessel. The isolated series is also a good choice for dual voltage system where noise and interference is an issue. Its input/output partitioning circuit prevents noise on the 12 volt system from being transmitted to the 24 volt side.

Standard, Non-Isolated Series

- Intended for use on negative ground systems
- 10 -15 VDC input range
- Available in 7, 16 and 25 amp outputs
- Current limited, voltage spike suppression, automatic thermal shutdown and recovery

Isolated Series

- Allows positive/negative ground compatibility between 12V battery and 24V accessories
- Wide range input, 10 - 16V, regulates to 24.5V
- Superior noise reduction
- Input/output isolation 250VDC
- Heavy duty powder coated aluminum case
- Available in 6 and 18 amp outputs
- Anodized aluminum case
- Available on special order as battery charger

Model	Input Voltage	Output Voltage	Output Amps Intermittent	Output Amps Continuous	Case Size	Weight Lbs	Weight Kg
Standard - Non-Isolated							
12-24-7	10-15	27.2	7	7	C-1	1.4	.64
12-24-16	10-15	27.2	16	16	C-2	3.55	1.61
12-24-25	10-15	27.2	25	25	C-3	4.1	1.86
Isolated							
12-24-6I	10-16*	24.5	6	4	C-4	6	2.7
12-24-18I	10-16*	24.5	18	10	C-5	12	5.5

**11.5 VDC min. start-up voltage, then operates @ 10-16 VDC from 1 amp min. to full load*

12 → 24V Step-Up Converters

Specifications Standard

Standard, Non-Isolated

Input: 10 - 15V DC

Output: 27.2 VDC +/-5% at extreme temperature load, input, tolerance, etc.

Ripple: <100mV P-P

Regulation: +/- 5% Line/Load

Duty Cycle: Intermittent: 2 minutes, 20% duty
Continuous: 24 hours, 100% duty

Operating Temp: -25° – 30° C, derate linearly from 30 to 0% @ 80° C

Mechanical

Efficiency: 93% - Typical.

- Anodized aluminum, glass filled polycarbonate, dust water and impact resistance to IP533
- Front panel terminal block
- Output indicator: Green LED

Specifications Isolated

Isolated

Input: 10 -16V DC

Output: 24.5 VDC

Ripple: 150 mV P-P maximum

Regulation: 2% Line/Load

Duty Cycle Ratings:
Intermittent - 20 minutes max on time, 20% duty. Current limit set at approx. 105% of intermittent rating.
Continuous - 24 hours, 100% duty

Idle Current: Less than 50 mA

Operating Temp: 0° - 50° C, derate linearly from 100% @ 40° C, to 50% @ 50° C

Switching Frequency: 70 Khz.

Efficiency: 85% - Typical.

Isolation – Output/Chassis; Input/Chassis: 250 VDC

Mechanical

- Anodized aluminum heat sink case
- Front panel terminal block
- Heavy duty mounting flange
- Conformal coated PC board

Options/Factory Modifications

- Operation as a battery charger (contact factory)
- Parallel/redundant operation (contact factory)
- High vibration mounting kit
- Non-standard output voltage (contact factory)

Case Size

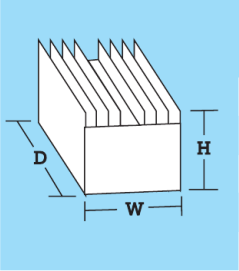

Case	Inches			Centimeters		
	H	W	D	H	W	D
C-1	3.5	3.5	1.75	8.9	8.9	4.5
C-2	4.25	5.9	14.0	10.8	15.0	35.6
C-3	6.0	6.8	16.5	15.2	17.3	41.9
C-4	4.25	5.9	14.0	10.8	15.0	35.6
C-5	6.0	6.8	16.5	15.2	17.3	41.9

Power Supplies

Go to Webpage!

Integrated Power System with Internal Batteries

Input: 115/230 VAC
Output: 12, 24, or 48 VDC,
11 – 40 Amps

Page 27

Go to Webpage!

Heavy Duty Power Series

Input: 115/230 VAC
Output: 12 or 24 VDC,
5 - 35 Amps

Page 28

Integrated Power System

Go to Webpage!

The Integrated Power System (IPS) is a unique multifunction power supply which incorporates built-in battery back-up and numerous power accessories within a single 2RU (3.5") chassis, thus eliminating time-consuming system integration, component sourcing and installation, while saving precious rack space--ideal for 12, 24 or 48VDC power applications requiring AC fault tolerant operation such as GMDSS systems or any critical DC system.

A precision regulated power supply/charger, back-up battery, low voltage battery disconnect, output metering, LED status indicators and Form C alarm contacts are all pre-wired and calibrated within the unit for plug-and-play operation. Plug-in terminals are provided for easy wiring of an additional parallel rectifier input, or external batteries for increased back-up capacity.

The batteries are always in-line with the load, thus there is no interruption from relays or transfer switches in the event of AC loss. Batteries are recharged when AC is restored. A manual battery disconnect switch allows internal or external battery service or replacement while the system is running. Models available for -48, +24 and +12 volt applications.

Features

- Precision regulated power supply simultaneously maintains batteries at peak charge and supplies system load
- Built-in batteries instantly power load during AC failure--no switch-over delay. 3-5 year average life. Terminals provided for additional external batteries for increased back-up capacity
- Terminals provided for easy addition of supplemental power via parallel rectifier (48V and 24V models only)
- Automatic low voltage and manual battery disconnect
- Numerous front panel monitors--L.E.D. status indicators and digital ammeter/voltmeter
- Form C summary failure alarm contacts; loss of internal rectifier output, loss of external rectifier output, low voltage battery disconnect contactor open. AC input failure alarm contacts optional
- Numerous protection features--AC input breaker, internal battery breaker, auto thermal shutdown/recovery, current-limiting, short- circuit and over-voltage protection
- 19" rack, 6" forward rackmount brackets provided

Model	Input Amps @ Full Load 115 / 230	Output VDC	Output Adjustment Range	Supplemental DC Power Input Port	Internal Battery Capacity	Ground Reference
IPS 48-11	11 / 5.5	54.4	40-60 VDC	40 Amps	5 A-H	Positive
IPS 24-22	11 / 5.5	27.2	20-30 VDC	40 Amps	10 A-H	Negative
IPS 12-40	11 / 5.5	13.6	10-15 VDC	N/A	20 A-H	Negative

Power Supplies - Heavy Duty Power Series

These super-rugged DC power supplies are ideal for powering 12 and 24 volt communication/navigation equipment onboard commercial vessels where reliability is essential. The proven linear circuit design provides pure noise free output and long service life.

Features

- Excellent Regulation and Ripple Spec: Output voltage maintained within 1% under all rated line and load conditions
- Polyurethane conformal coated PC board and corrosion resistant heavy duty aluminum case with integral shock mounts assures survival in hostile environments
- Heat generated by semi-conductors is extracted and dissipated by large heat sink fins for cool operation
- Protection: overvoltage, current limit; (set @ 105% of intermittent rating), thermal overload and input/output fusing
- Thermally activated cooling fan on "CD" units

Model	Nominal Input/VAC	Maximum Input Current @115	@230	Output Amperage Intermittent	Continuous	Case Size Ref.	Weight Lbs.	Kg.
12 Volt Output								
115-12-8	115/230	2.5	1.5	8	5	P-1	10	4.5
115-12-20A	115/230	5.5	2.5	20	8	P-2	20	9.1
115-12-35CD	115/230	7.5	3.5	35	35	P-3	32	14.6
24 Volt Output								
115-24-10	115/230	5.5	2.5	10	4	P-2	20	9.1
115-24-18CD	115/230	7.5	3.5	18	18	P-3	32	14.6
115-24-35CD	115/230	12.5	7.5	35	35	P-4	60	27.3

Specifications

Input Range

105-125/210-250 VAC (selectable), 50-60 Hz; Derate to 50% output below 110 and 220 VAC

Operating Temperature

Standard Units
0-50°C, Derate Linearly From 100% @ 40°C To 50% @ 50°C Thermal shutdown @ 85°C Case temperature

C.D. Units
0-65°C, Derate Linearly From 100% @ 50°C To 50% @ 65°C Thermal Shutdown @ 85°C Case temperature

Duty Cycle

Intermittent: 20 minutes max on time, 20% duty
Continuous: 24 Hours/Day 100% Duty

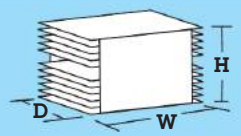

	Inches			Centimeters		
	H	W	D	H	W	D
P-1	6.0	4.6	8.5	15.2	11.7	21.6
P-2	5.7	4.8	16.3	14.5	12.2	41.4
P-3	6.5	9.5	14.0	16.5	24.1	35.6
P-4	6.5	13.0	18.75	16.5	33.0	47.6

Options

- Modify for use as a Battery Charger
- Output voltage adjust (see Output Voltage for range)
- Transfer relay for back-up battery in event of power failure (ERC option)

Output Voltage

12 V Models: 13.6 VDC
(Internally adjustable 12.6-14.5 VDC)
Ripple: 40mV P-P
(@ 110-125 / 220-250 VAC input)

24 V Models: 24.5 VDC
(Internally adjustable 21-27.5 VDC)
Ripple: 70mV P-P
(@ 110-125 / 220-250 VAC input)

Regulation All Models: 1% Line and Load
(@ 110-125 / 220-250 VAC input)

Mechanical

- Powder coated aluminum heat sink case
- Front panel terminal block
- Heavy duty mounting flange
- Conformal coated PC board

Back in 1974, Newmar began producing the Heavy Duty Power Supply Series, the first model designated 115-12-6A. The unit pictured, serial number 133, came off the tug boat "Hercules" in Galveston and was in service for 15 years powering a VHF radio. It returned to Newmar as when the vessel was refitted, it worked perfectly and there were no records or indications that the unit had ever been repaired.

NEWMAR

DC Power Onboard

DC UPS & Power Control

Go to Webpage!

DC UPS: Nav-Pac

Page 34

Go to Webpage!

DC UPS: StartGuard

Page 35

DC UPS & Power Control

Go to Webpage!

DC Power Stabilizers

Page 36

Go to Webpage!

Battery Isolators

Page 38

Go to Webpage!

Automatic Power Selectors

Page 39

Go to Webpage!

Battery Integrators

Page 40

Go to Webpage!

Low Voltage Disconnects

Page 41

Go to Webpage!

Noise Filters

Page 42

DC UPS: Nav-Pac

Go to Webpage!

Now Available in 24 Volt

Marine communication/navigation electronics such as programmable data transceivers, GPS and other microprocessor-controlled devices require clean and steady DC input power. Their sensitive circuitry is highly vulnerable to voltage drop from engine start, noise and line spikes from alternators and motors, and conducted noise from various other electronic devices. NAV-PAC prevents these conditions from affecting electronics.

Features

- Prevents voltage "drop-out" during engine start and/or other high intermittent loads such as Thrusters
- Absorbs line "spikes"
- Filters out electrical interference
- Provides supplemental voltage/battery back-up for up to 15 min.
- Remote monitor panel provided, NP-12 only

Specifications

Output: 12 Volt @ 20 amps max.
24 Volt @ 15 amps max.
Battery: Sealed Rechargeable 5.0 Amp-Hour, 5-7 years typical life, can be replaced. Low-voltage disconnect circuit protects battery from total discharge. Certified by DOT and IATA for shipment by air.
Noise Filtering: Audio through 200 MHZ

Back-Up Power	
12V	24V
8A for 15 minutes	8A for 15 minutes
12A for 8 minutes	12A for 8 minutes
18A for 2 minutes	15A for 2 minutes
20A for 1 minutes	----------

Model	Description
NP-12	Nav-Pac, 12V, 20 Amps
NP-24	Nav-Pac, 24V, 15 Amps

Voltage Spike Protection: Transient energy capability; 100 Joules, 4,000 amps Max (8 x 20 micro seconds)
Size (H x W x D):
12V: 5.25" x 6.2" x 7.4" (13.3 X 15.7 X 18.8 cm)
24V: 6.0" x 6.75" x 7.5" (13.3 x 17.14 x 19 cm)
Weight: 12V: 5.9 lbs. (2.7 Kg.)
24V: 8 lbs. (3.6 Kg.)
Panel Dimensions: 3.5" W x 2" H (8.9 x 5.1 cm)
U.S. PATENT #: 5172292

Provides Continuous Voltage Protection

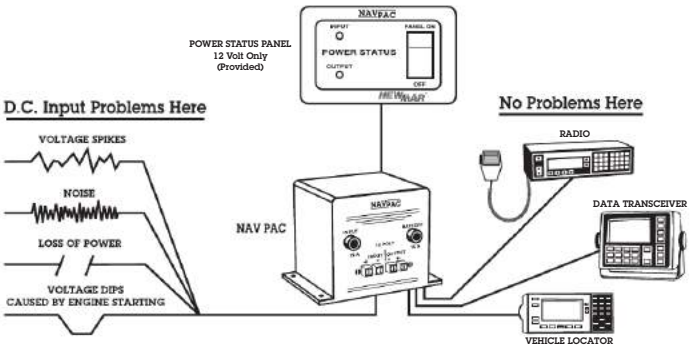

DC UPS & Power Control

NEWMAR

DC Power Onboard

DC UPS: StartGuard

Go to Webpage!

The abrupt DC system voltage drop that accompanies engine starting can cause communication/navigation electronics to "dump" programmed memory.

StartGuard solves this problem by providing supplemental voltage to sensitive electronics while the engine is cranked. It contains a sealed rechargeable battery which is switched on-line to electronics when sensing the starter switch or solenoid is engaged. When the engine is running StartGuard automatically goes off-line and the internal battery is recharged by the alternator.

Specifications

Input Voltage: 13.8 - 14.8 VDC nominal, 15.5 VDC max.

Relay Activation Input Voltage: 7-15 VDC

Output: 20 amps max.

Battery: 12 VDC, sealed rechargeable, 5- 7 year life (typical), 5 amp-hour capacity, Certified by DOT and IATA for shipment by air.

Back-up Capacity (Fully Charged): (See matrix)

Provides Voltage Protection During Engine Start

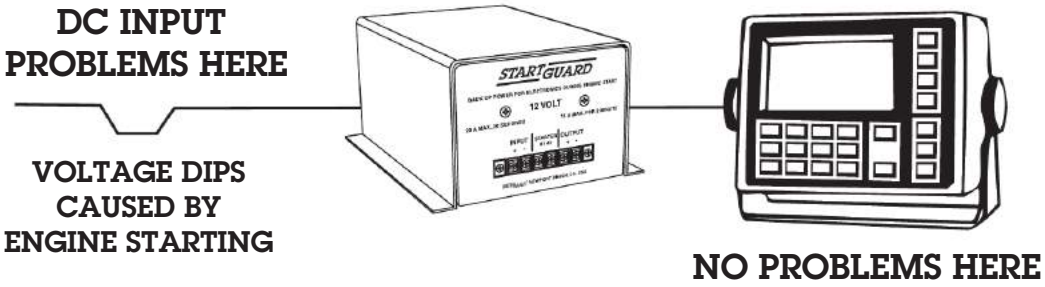

Model	Input	Back-Up Capacity 1 Minute	Back-Up Capacity 2 Minutes	Dimensions Inches	Dimensions Centimeters	Weight Lbs	Weight Kg.
NS-12-20	13.8-14.8 VDC Nominal 15.5 VDC Max	20 amps	18 amps	8.25 x 4.9 x 3.5	20.1 x 12.5 x 8.9	5.5	2.5

DC Power Stabilizers

Go to Webpage!

12-12-3I

24-24-7I

12-12-12I

12 & 24 Volt Stabilizing Converters

Feed sensitive electronics with proper voltage regardless of battery condition. These stabilizing converters provide continuous, precisely regulated output over the entire range of a battery's usable voltage. This prevents subjecting loads to fluctuating input voltage which can cause shutdown, diminish performance and possibly damage sensitive circuitry.

These converters provide total input/output isolation, virtually eliminating conducted line noise and permitting connection of negative ground gear to positive or floating ground systems, or vice versa. They can be modified for use as battery chargers, allowing them to maintain a battery at a great distance from the primary voltage source, providing reserve power if the main source fails. The rugged anodized aluminum case is ideal for marine applications.

Application Benefits Include

- Operate electronics at optimal input voltage, even from nearly drained batteries
- Boost voltage to compensate for voltage drops in long wire runs from batteries
- Eliminate voltage drops during momentary high current drain from batteries, as during engine start
- Eliminate voltage fluctuation from charge sources
- Eliminate voltage overshoot due to sudden removal of high current load

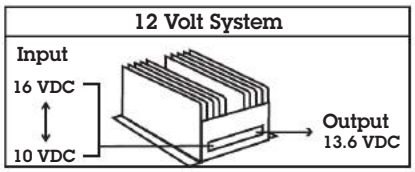

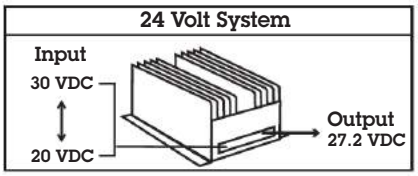

Model	Input Voltage	Input Amps	Output Voltage	Output Amps		Case Size	Weight	
				Intermittent	Continuous		Lbs	Kg
12-12-3i	10-16**	4	13.6	3	3	C-1	1	.45
12-12-6i	10-16**	8	13.6	6	6	C-2	2	.9
12-12-12I	10-16**	19.2	13.6	12	8	C-3	6	2.7
12-12-35I	10-16**	56	13.6	35	20	C-6	12	5.5
24-24-3i	20-32	3.7	27.2	3	3	C-1	1	.45
24-24-7i	20-32	8.7	27.2	7	7	C-2	2	.9
48-24-3I	20-56	4.8	24.5	3	3	C-7	7	2.7
48-24-6I	20-56	9.6	24.5	6	4	C-1	6	2.7
48-24-9I	20-56	14.4	24.5	9	5	C-1	8	3.6
48-24-18I	20-56	28	24.5	18	10	C-6	12	5.5

***11.5 VDC minimum start-up voltage, then operates @ 10-16 VDC from 1 amp minimum to full load*

DC Power Stabilizers

Specifications

Output: 12 or 24V, nominal, see matrix

Ripple: 150 mV P-P maximum

Regulation: 1% Line/Load

Duty Cycle Ratings: Intermittent - 20 minutes max on time, 20% duty. Current limit set at approx. 105% of intermittent rating. Continuous - 24 hours, 100% duty

Idle Current: Less than 100 mA (including power "ON" light)

Operating Temp: 0-50° C, Derate Linearly From 100% @ 40° C To 50% @ 50° C. Thermal shutdown @ 70° C Case Temperature.

Switching Frequency: 40 Khz.

Efficiency: 85% - Typical.

Isolation – Output/Chassis; Input/Chassis: 250 VDC

Mechanical

- Anodized aluminum heat sink case
- Front panel terminal block
- Heavy duty mounting flange
- Conformal coated PC board

Options/Factory Modifications

- Operation as a battery charger (contact factory)
- Parallel/redundant operation (contact factory)
- High vibration mounting kit
- Non-standard output voltage (contact factory)

Case Size

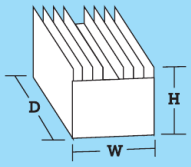

Case	Inches			Centimeters		
	H	W	D	H	W	D
C-1	3.5	3.5	1.75	8.9	8.9	4.5
C-2	6.5	4.0	1.75	6.8	10.2	4.5
C-3	4.25	5.9	14.0	10.8	15.0	35.6
C-4	6.0	4.7	14.0	15.2	11.9	35.6
C-5	6.0	4.7	16.0	15.2	11.9	40.6
C-6	6.0	6.8	16.5	15.2	17.3	41.9
C-7	2.8	4.2	10.4	7.1	10.7	26.4
C-8	3.5	3.5	1.75	8.9	8.9	4.5

Option: Extreme Vibration Mounting Kit

The Extreme Vibration Mounting Kit is available to protect NEWMAR power converters from the extreme stresses of shock and vibration when mounted on high vibration vehicles.

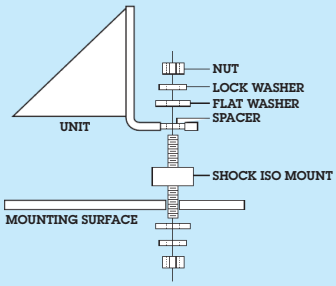

The kit (pictured here) replaces the standard vibration kit provided with the unit and fits into the unit's mounting flange to act as a "super shock absorber" for electronics in high vibration applications. It is available to fit all NEWMAR units from 2 to 70 lbs. Specify KIT–L for units which weigh 2–15 lbs. and Kit–H for units which weigh 16-70 lbs.

Battery Isolators

Go to Webpage!

These heavy duty isolators allow charging multiple batteries automatically from one or two alternators, and prevent discharge or 'dumping" of one battery into another. Each battery is charged according to its need without overcharging, rated for 12, 24, or 36 volt, negative ground DC systems. feature conservatively rated diodes and a rustproof anodized aluminum heat sink case. Models are available for 70, 120 and 165 amp alternators.

Features

- Heavy duty construction
- Rated for systems up to 48 volts DC, negative ground
- Rust-proof anodized aluminum case
- Stainless steel mounting hardware provided
- Protective covers provided for terminals

Specifications

Operating Temperature: -40 to +80° C

Duty cycle: Continuous rating to 50° C Derate linearly to 70% @ 80° C

Temp. rise: 5° C at full rated current (mount vertically for optimum cooling)

Voltage drop: 0.7V @ 50% load, 0.9V @ full load

Note: These battery isolators are not compatible with self-exciting alternators. The alternator must have an external excitation lead. Please consult the manufacturer of your alternator if you are unsure of your configuration

Model	Alternator Sources	Battery Bank	Max. Amperage Input Capacity	Stud Terminal Size	Dimensions			Weight
					L	W	H	Lbs.
1-2-70	1	2	70	6mm	3.25	4.5	3.1	2
1-3-70	1	3	70	6mm	3.25	4.5	3.1	2
2-3-70	2	3	70	6mm	6.5	4.5	3.1	4
1-2-120	1	2	120	6mm	6.5	4.5	3.1	3
1-3-120	1	3	120	6mm	6.5	4.5	3.1	3
2-3-120	2	3	120	6mm	12.5	4.5	3.1	5
1-3-165	1	3	165	6mm	9	4.5	3.1	5

Battery Integrators

Go to Webpage!

Charging multiple battery banks without use of diode isolators dictates that the batteries be connected or "integrated" only whenever a charge voltage is present so that they may be charged simultaneously, then disconnected or "isolated" when charge voltage is no longer present to allow for selective discharge and avoid having the secondary or standby battery drain into the primary battery.

Battery Integrators perform this function automatically, acting as a "smart" switch to connect independent battery banks only when a charging voltage is present. Otherwise, they are isolated, and discharge between banks is prevented.

The Battery Integrator causes no voltage drop in the charging system, while the multiple batteries are charged as a single bank whenever a charging source of approximately 13.2 VDC or 26.4 VDC or greater is present (depending on model).

When the alternator or charger is off or a large load causes the voltage to drop below the disconnect point the unit breaks the common tie between the banks. This allows selective battery discharge and prevents "dumping" of a higher-charged bank into a lower-charged bank. The unit may also be remotely activated to connect other batteries through the key starter or a manual switch to provide an added "boost" from the secondary battery whenever the starter is engaged and the unit senses there is sufficient voltage in that battery to provide an assist.

Features

- Enables charging of two separate banks with out voltage drop, yet maintains 100% isolation at all other times. For systems of three banks or more, an additional unit must be installed for each additional bank
- Heavy duty silver-plated contactor, continuous duty rated to 100 amps or 200 amp depending on model
- Voltage sense circuit, epoxy encapsulated and heavy duty continuous rated solenoid are all designed for use in marine environments
- 12 volt, 100 amp model has ignition protection rating
- Easy three-wire hook up for two bank systems (BATT +, BATT +, GROUND)
- Terminal for optional wiring of remote light indicating when battery banks are integrated
- Optional internal connection can be wired though key starter or manual over ride switch, tying battery banks together for extra boost during engine start

Typical Installation

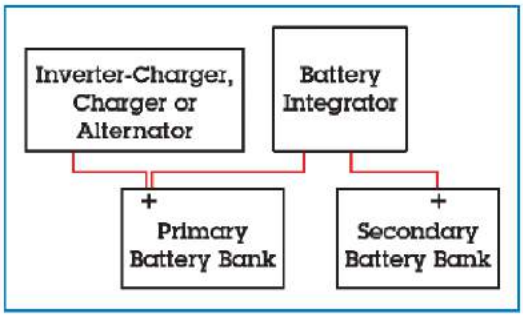

Specifications

Operating Temperature:
Control: -40 to +85° C
Solenoid: -28 to +48° C

Terminals: Battery Connections: 5/16" copper alloy stud

Dimensions (H x W x D)/Weight:
100 Amp Models: 3" x 3.25" x 2.5" / 1Lb.
200 Amp Model: 4" x 3.3" x 4.1" / 2 Lbs.

Approvals: CE Marked

Model	Voltage	Battery Integration Point	Battery Disconnect Point	Max. Continuous Current	Peak Maximum Current
BI-100*	12 VDC	13.2 VDC	12.8 VDC	100 Amps	400 Amps
BI-200	12 VDC	13.2 VDC	12.8 VDC	200 Amps	600 Amps
BI-24-100	24 VDC	26.4 VDC	25.6 VDC	100 Amps	400 Amps

** Ignition Protected*

Automatic Power Selectors

Go to Webpage!

The Automatic Power Selector (APS) is a solid state device which enables installation of a seamless, redundant power system for critical electronic loads. It selects the higher voltage of two independent DC power sources and routes power to the load. Should one source falter or fail, the other will automatically supply the load with no transfer delay, operation continues uninterrupted.

Easy installation, two independent power sources are wired to the APS and routed in a single output to the vital load. Alarm sense wires can be easily attached to input studs providing loss of power source signal. Rugged, rust-proof anodized aluminum case.

Model	Max Loads	Voltage Rating	Stud Terminal Size	Dimensions (Inches)	Weight (Lbs.)
APS-70	70 Amps	6 - 50 VDC, neg. ground	6mm	3.25 x 4.5 x 3.1	2
APS-160	160 Amps	6 - 50 VDC, neg. ground	6mm	9.0 x 4.5 x 3.1	5

Typical Installation

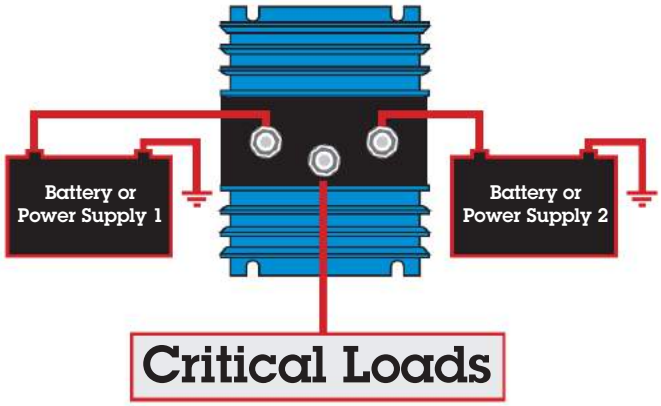

- Engine Controls
- Thruster Controls
- A.I.S.
- Auto Pilots
- Alarm Panels
- Communication Systems
- Navigation Systems
- Control Systems
- Any critical DC Load

Low Voltage Disconnects

Go to Webpage!

Discharging batteries beyond a critical low voltage can damage the batteries and/or load, and require a longer recharge interval. A low voltage disconnect prevents this condition. The LVD contains a sense and control circuit housed in a compact, rugged, vinyl-clad aluminum case. It is installed in-line between the battery and the load. The unit continually monitors battery voltage and if it falls below a preset voltage threshold, the load is automatically disconnected. When batteries are recharged past another pre-set voltage the load is reconnected. Connect and disconnect points are user adjustable.

Model	Input Voltage	Contact Current Rating	Factory Set Actuation Points		Adjustment Range
			Disconnect	Connect	
LVD 12-30	12V (Neg Ground)	30 Amps	10.4 VDC	12.2 VDC	9 - 15 VDC
LVD 12-75	12V (Neg. Ground)	75 Amps	10.4 VDC	12.2 VDC	9 - 15 VDC
LVD 24-50	24V (Neg. Ground)	50 Amps	21.0 VDC	24.5 VDC	18 - 30 VDC
LVD 48-30	48V (Pos. Ground)	30 Amps	42.0 VDC	49.0 VDC	38 - 60 VDC

Specifications

Operating Temperature: 0 - 50 °C

Mechanical

Dimensions (mounted vertically, all models):
5.25" High x 5.25" Wide x 3.5" Deep

Weight: (All models): 2 Lbs.

Typical LVD Installation

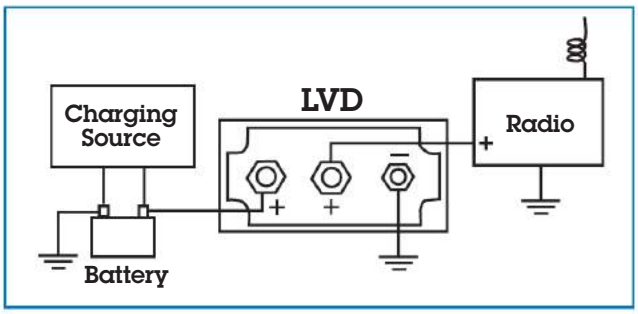

Noise Filters

Go to Webpage!

The interference or electronic "noise" generated by alternators, ignition systems, motors, etc., can render a vehicle or vessel's radio or other electronic equipment virtually useless. This interference takes the form of popping or static on radios or audio gear and garbled images or "hash" on video displays.

These specialized filters can be used singly or in combination to attenuate conducted line noise, either at the affected equipment or at the noise source.

Features

- Heavy duty aluminum construction
- Operate on 6-48 VDC systems
- Integral mounting flanges for secure installation
- Nickle plated, brass stud connectors on alternator filters accommodate high current cables and terminals
- Color coded wire leads on PC models make in-line installation easy

Filtered Frequencies

- Model 150A: 70 kHz – 100 MHz
- Models PC-10 and PC-25: Audio – 200 MHz

Model	Rating	Installation Location	Dimensions (Inches)	Weight (Lbs.)
150-A	150 Amp	At alternator	3.25 x 5.75 x 3.25	3
PC-10	10 Amp	At affected equipment in "+" and "-" leads	1.25 x 4.25 x 3	1
PC-25	25 Amp	At affected equipment in "+" and "-" leads	2 x 4.25 x 3.25	2

Power Distribution

Go to Webpage!

Accessory and AC Master Series

Page 44

Go to Webpage!

Electrical Panels - Elite Series

Page 46

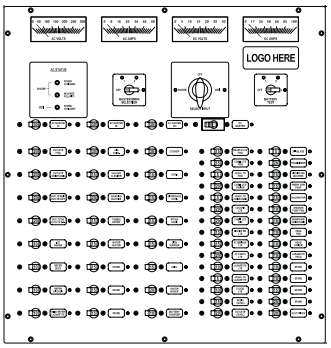

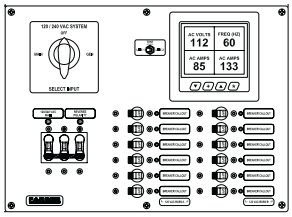

Go to Webpage!

Custom Panel Templates - AC/DC

Page 52

Go to Webpage!

AC Source Switches

Page 56

NEWMAR DC Power Onboard

Electrical Panels - Accessory AC/DC

These versatile panels are ideal when only a limited number of electrical circuits are needed, or for larger systems where their modular design makes for an easy and attractive expansion of existing system capacity.

Stock panels with breakers installed come standard with DC indicator lights, but may be specially ordered with AC indicator lights. Blank versions of the panels have all necessary hardware to install indicator lights and breakers. All panels are provided with a circuit identification label set of 22 common on-board electrical functions is provided. Other more extensive label sets (up to 206 functions) are also available separately.

Go to Webpage!

5.25" x 7.5"

Accessory Panels

ACCY-IX: 8 breaker capacity, 5 installed standard; 2-5A, 1-10A, 1-15A, 1-20A or specify. 8 DC circuit "ON" indicator lights installed, AC indicator lights installed on special order basis. LS-1 Label Set included. Weight: 2 lbs.

ACCY-IBX: Blank version of ACCY-IX above. No breakers or indicator lights provided. Label set, indicator light and breaker mounting hardware provided. Weight: 1 lb.

See page 64 and 66 for circuit breaker and indicator light selection.

ACCY-IIX: Half-height version of ACCY-IX (above), 3 breaker capacity, 3 installed standard: 1-5A, 1-10A, 1-15A or specify. With DC "ON" indicator lights. AC indicator light installed on special order basis. Weight: 1 lb.

ACCY-IIBX: Blank version of ACCY-IIX above. No breakers or lights provided. LS-1 label set, light and breaker mounting hardware provided. Weight: 1 lb.

See page 64 and 66 for circuit breaker and indicator light selection.

5.25" x 3.75"

Installation Cut-Out Dimensions*

Model	Inches (W x H)	Centimeters (W x H)
ACCY-IX/BX	4 X 6	10.2 X 15.2
ACCY-IIX/BX	4 X2.5	10.2 X 6.4

** Allow approximately 3" depth clearance for all panels on this page*

See page 66 for Panel Back Enclosures

Electrical Panels - AC Master

Go to Webpage!

Essential control/protection whenever AC from shorepower or generators is on board. A double pole master breaker with power on indicator light protects both hot and neutral legs of the AC circuit. A reverse polarity light provides clear warning when wiring is reversed and poses a shock hazard. Single pole branch circuit breakers (Model AC-IX) and individual "ON" indicator lights provide control and protection of various AC loads. For 115/230 VAC applications – see ratings note*. A label set of common on-board circuits is provided.

AC Master Panels

AC-IX: 30 amp master breaker (15A or 50 A* optional), 5 branch circuit capacity 4 installed standard 1-10A, 2-15A, 1-20A, or specify. LS-I Label set included. Weight: 2 lbs., (.9 Kg.)

5.25" x 3.75"

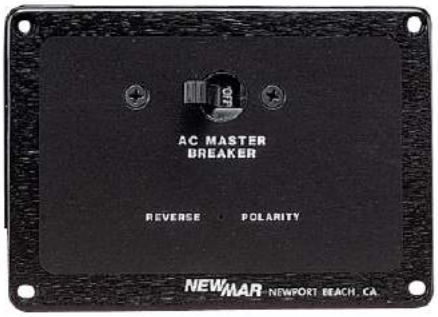

AC-II:
30 Amp master breaker (15A or 50A* optional).
Weight: 1 lb (.5 Kg.)

5.25" x 7.5"

**Circuit Breaker Rating Note: Standard series breakers which are rated higher than 30 amps are acceptable for use in 230 VAC Line-to-Line systems but are not rated for 230 VAC Line-to Neutral systems.*

LS-1 Label Set Provided

Each panel is provided with a basic set of the following functions. Other more extensive label sets (up to 206 functions) are also available separately. Visit us online to view a complete set of labels offered.

Installation Cut-Out Dimensions

Model	Inches	Centimeters
AC-IX	4 x 6	10.2 x 15.2
AC-II	4 x 2.5	10.2 x 6.4

Go to Webpage!

See page 56 for AC Source Selector Switches

Power Distribution

Electrical Panels - Elite Series

Go to Webpage!

ES-1 DC Master Panel

Features:

- Analog DC volt and ammeter, back illuminated with dimmer
- 12 volt standard, 24 volt optional
- 4 battery bank test switch.
- DC master breaker (100 Amp standard; 50 or 75 amp optional)
- 22 branch circuit capacity, 20 installed standard; 3-5A, 5-10A, 6-15A, 6-20A or specify
- Weight: 8 lbs., (3.6 Kg.)

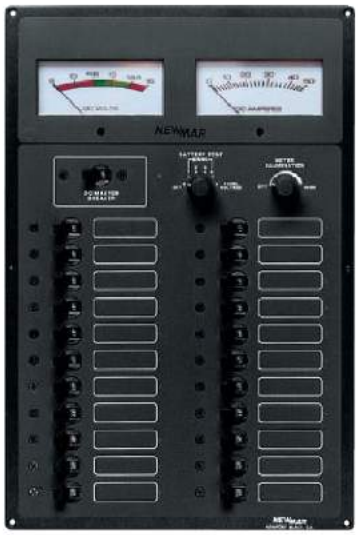

10" W X 15" H X 4" D
22 Breaker Capacity

ES-6 DC Load Center

Features:

- Accommodates one analog meter. DC 0-50A ammeter standard or 12 or 24 volts optional
- Master breaker, single pole, 75 amp standard; 50 or 100 amp optional, single pole
- 10 branch circuit capacity, 8 installed standard: 1-5A, 2-10A, 4-15A, 1- 20A

5.25" W X 15" H X 4" D
10 Breaker Capacity

Because of their exact height match and style compatibility, the panels below are ideal companions for expanding circuit capacity of the ES-1 or ES-5, or they may be used as stand-alone load centers.

ES-7 AC or DC Accessory Panel

Features:

- AC (120/240V) or DC (12/24V) master breaker (double pole AC 50 amp* standard, 30 amp optional, or DC 100 single pole amp standard; 50 or 75 amp optional
- 16 branch circuit capacity, 12 installed standard:
  ES-7A: 2-10A, 5-15A, 5-20A
  ES-7D: 2-5A, 3-10A, 5-15A, 2-20A
- Weight: 7 lbs., (3.2 Kg.)

* Note 50 amp master OK for use on 230 VAC line-to-line systems. For 230 VAC line-to-neutral systems 30 amp is maximum master breaker value.

5.25" W x 15" H x 4" D
16 Breaker Capacity

ES-8 AC or DC Accessory Panel

New!

Models available for AC or DC application; Common features:

- Digital or analog metering
- Master Breaker
- 10 branch single pole circuit breaker capacity, 8 x 15A installed standard

ES-8 AC Panel Features

- Double pole master breaker 50 amp standard (100 amp optional)
- Reverse polarity warning light
- Digital volt-amps-frequency-kW meter (analog volt or amp optional)
- 8 single pole branch circuit breakers installed: 8 x 15A

5.25" W x 15" H x 4" D
10 Breaker Capacity

ES-8 DC Panel Features

- Master breaker
- Digital DC volt meter standard, or digital energy meter or analog volt or amp optional
- 8 single pole circuit breakers installed: 8 x 15A

See page 48 for additional specs.

Power Distribution

AC-DC Master Combined Control Panels

Locating all AC and DC functions on one panel provides a vessel with a central load distribution and monitoring center.

- Complete metering of voltage and current on AC and DC systems. Back-lit analog meters
- AC master breaker(s) with reverse polarity warning light.
- Power "on" indicator lights on all circuits.
- Four battery bank voltage test switch
- Deluxe label set (LS-III) included, 206 functions
- 115 VAC standard/230 VAC optional
  12 VDC standard/24 VDC optional

ES-4

Large 3-1/2" scale meters and an ample circuit breaker capacity makes this the panel of choice for boats in the 35'-45' range.

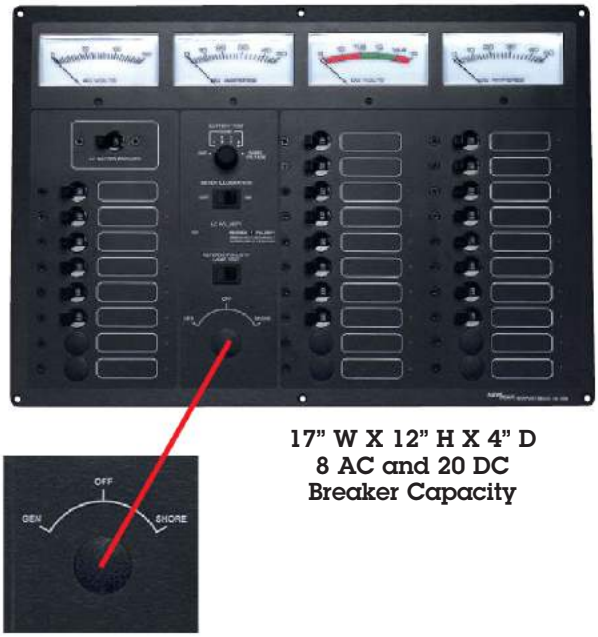

17" W X 12" H X 4" D
8 AC and 20 DC
Breaker Capacity

Option

For vessels with an onboard generator, the panel may be fitted with a 7.5 or 15 kW ship-shore AC source selector switch. Specify ES-4SS option when ordering.

ES-3 Compact AC/DC Load Center

13.7" W X 10" H X 4" D
6 AC and 16 DC Breaker Capacity

ES-5

Has large DC circuit capacity and AC section including two load groups and a source selector switch for two shore power lines and a 15kW generator. Pre-heat and start-stop controls are standard. Additional system capacity can be obtained by incorporating model ES-6, ES-7 or ES-8 (listed on page 46).

20" W x 15" H x 6" D
20 AC and 24 DC Breaker Capacity

See page 48 for additional specs.

Electrical Panels - Elite Series

Go to Webpage!

Installation Dimensions

Model	Panel Size		Cut Out	
	(W x H) Inches	(W x H) Centimeters	(W x H) Inches	(W x H) Centimeters
ES-1	10 x 15	25.4 x 38.1	14 X 9	35.6 X 22.9
ES-3	13.7 x 10	34.8 x 25.4	8.8 X 13	22.4 X 33
ES-4	17 x 12	43.2 x 30.5	10.8 X 16.8	27.4 X 42.7
ES-5	20 x 15	50.8 x 38.1	13 X 19	33 X 48.3
ES-6D	5.25 x 15	13.3 x 38.1	13 X 4.5	33 X 11.4
ES-7A & 7D	5.25 x 15	13.3 x 38.1	13.8 X 4	35.1 X 10.2
ES-8A & 8D	5.25 x 15	13.3 x 38.1	13.8 X 4	35.1 X 10.2

Model	DC Circuits	AC Circuits
ES-1	100A master plus 22 single pole breaker capacity, 20 installed standard, 3-5A, 5-10A, 6-15A, 6-20A	
ES-3	16 Breaker capacity, 12 Installed standard; 2-5A, 3-10A, 4-15A, 3-20A or specify	30 amp master standard 50 amp optional, plus 6 S.P. branch capacity, 5 installed standard; 1-10A, 15A, 2-20A or specify
ES-4	20 Breaker capacity, 16 Installed standard; 3-5A, 3-10A, 5-15A, 5-20A or specify	50 amp master standard plus 8S.P. branch capacity, 6 installed standard; 1-10A, 3-15A, 2-20A or specify
ES-4SS	Same as above with 7.5 kW, three position (Shore-Off-Gen) ship shore selector switch installed. Special Order Only.	
ES-5	Master plus 24 breaker capacity, 20 installed standard; 3-5A, 4-10A, 7-15A, 6-20A or specify	Two load groups each consisting of: Master breaker (D.P.) 50 amp* standard plus 10 S.P. branch capacity, 8 installed standard; 2-10A, 3-15A, 3-20A or specify
ES-6D	75A master plus 10 single pole breaker capacity, 8 installed standard, 1-5A, 2-10A, 4-15A, 1-20A	
ES-7A		50A double pole master plus 16 single pole breaker capacity, 12 installed standard, 2-10A, 5-15A, 5-20A
ES-7D	100A master plus 16 single pole breaker capacity, 12 installed standard, 2-5A, 3-10A, 5-15A, 2-20A	
ES-8A		50A double pole master, plus 10 single pole breaker capacity, 8 installed, 15A
ES-8D	100A single pole master, plus 10 single pole breaker capacity, 8 installed, 15A	

Options

Meters:

Standard voltmeters are for 12 VDC or 115 VAC applications. (Ammeter range depends on master breaker value.) Voltmeters can be installed for 24 VDC or 230 VAC applications. Contact the factory for a complete list of metering options

Alternate Circuit Breaker Configurations:

To change circuit breaker value mix or location, advise us the breaker arrangement. (Order forms listing all options are available online - see "Download PDF Order form" link below each product description.) Allow 3-5 days additional lead time to complete the modification.

Note: There is a modification fee for special configurations – contact factory

Power Distribution

Custom Panel Templates - Accessory

Go to Webpage!

Built as Shown or Customized to Any Specification.

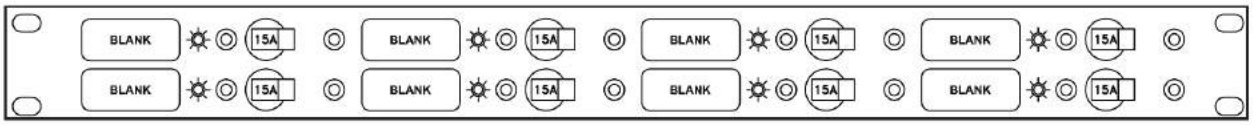

AC/DC **# AD24**

8 Single Pole

19″ Rackmount

Dimensions: 1.75″ x 19″

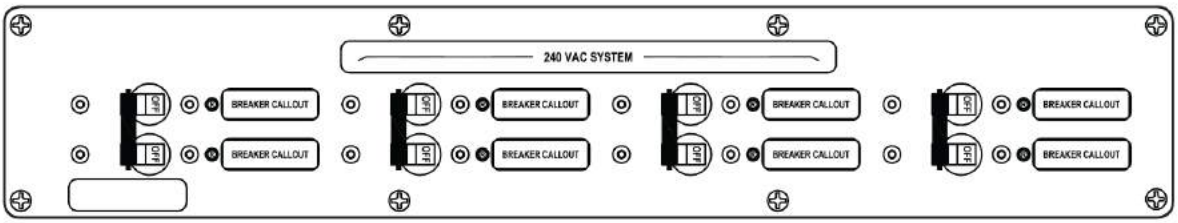

AC **# AD26**

4 Double Pole

Dimensions: 17.75″ x 3.25″

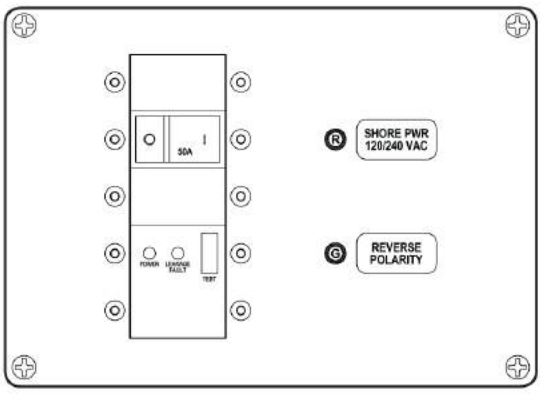

120/240V AC **# A28**

50 Amp Master with Ground Fault

Dimensions: 5″ x 7″

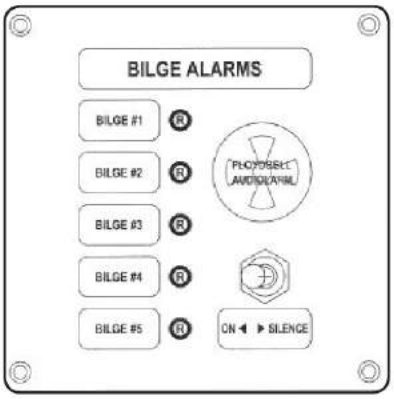

Bilge Alarm Panel **# D16**

Dimensions: 5″ x 5″

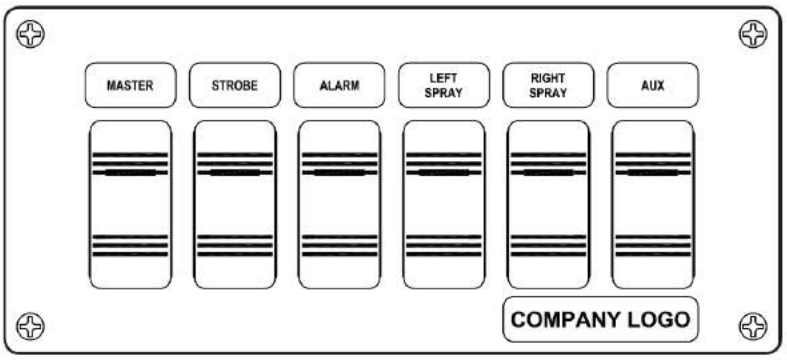

12 VDC Console Switch Panel

6 Rocker Switches

Dimensions: 3.9″ x 8.7″

 # D18

Power Distribution

Custom Panel Templates - AC

Go to Webpage!

Built as Shown or Customized to Any Specification.

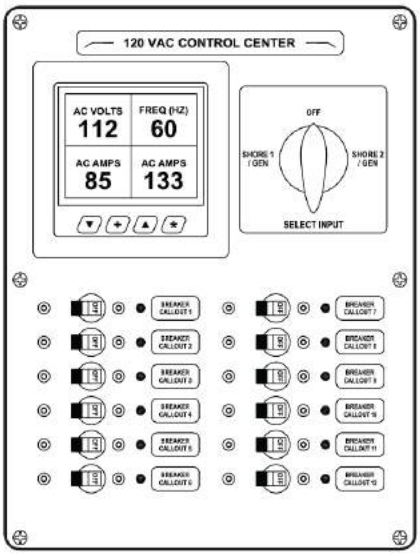

 # A10

120/240V AC
Source Selector Switch
Digital Volt, Amp, Frequency Meter
12 Single Pole

Dimensions: 8.5" x 11.25"

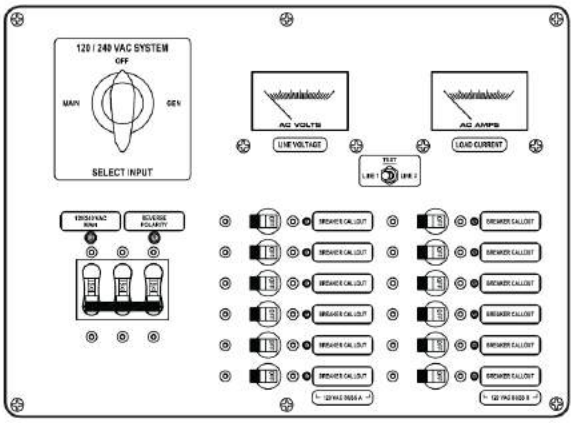

 # A12

120/240V AC
Three Pole Master, Source Selector Switch,
Analog Volt and Amp Meter
12 Single Pole

Dimensions: 13.75" x 10"

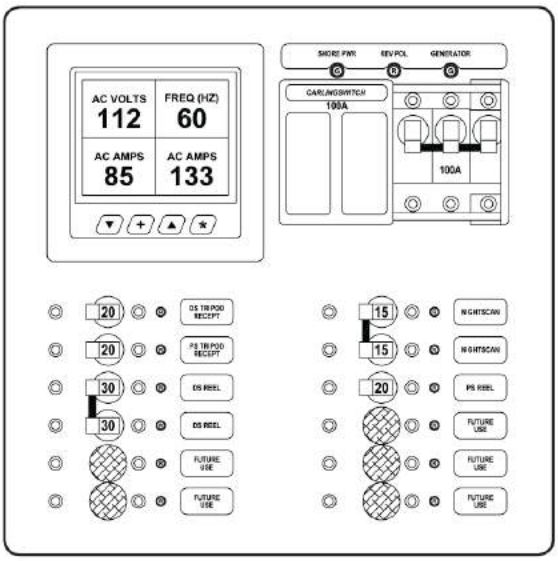

 # A14

120 or 240V AC
Three Pole Master/Slide Source Selector
Digital Volt, Amp, Frequency Meter
12 Single Pole or 6 Double Pole

Dimensions: 11" x 11"

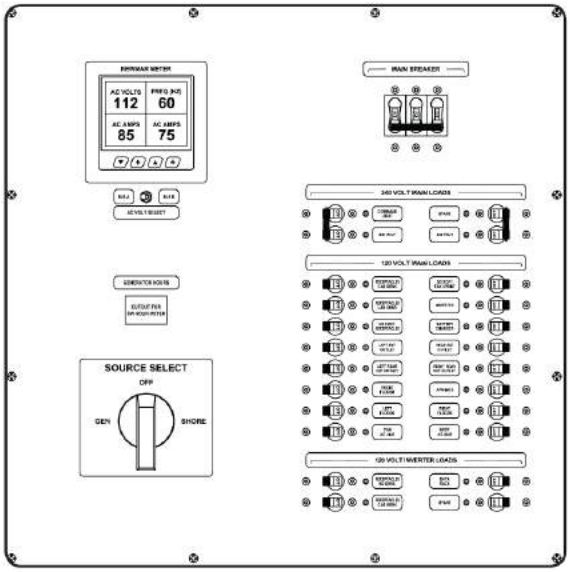

 # A16

120/240V AC
Three Pole AC Master,
Source Selector Switch,
Digital Volt, Amp, Frequency Meter
2 Double Pole, 16 Single Pole Main Loads,
4 Single Pole Inverter Loads

Dimensions: 20" x 20"

Power Distribution

NEWMAR

DC Power Onboard

Custom Panel Templates - AC

Built as Shown or Customized to Any Specification.

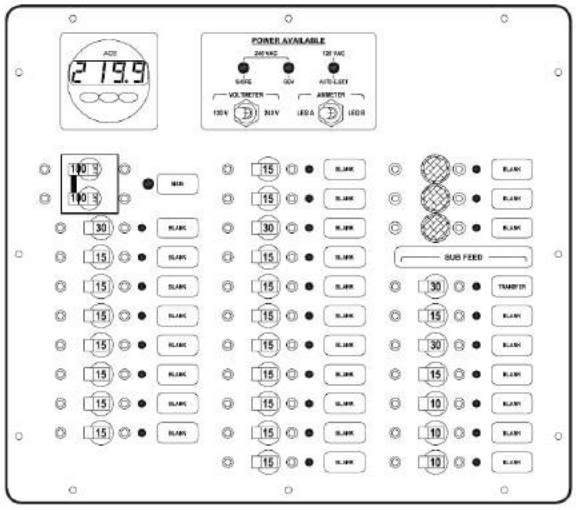

 # A18

120/240V AC
Double Pole Master
Digital AC Volt, Amp,
Frequency, kW Meter
21 Main Load Single Pole
7 Sub-Feed Single Pole

Dimensions: 14.5" x 12.75"

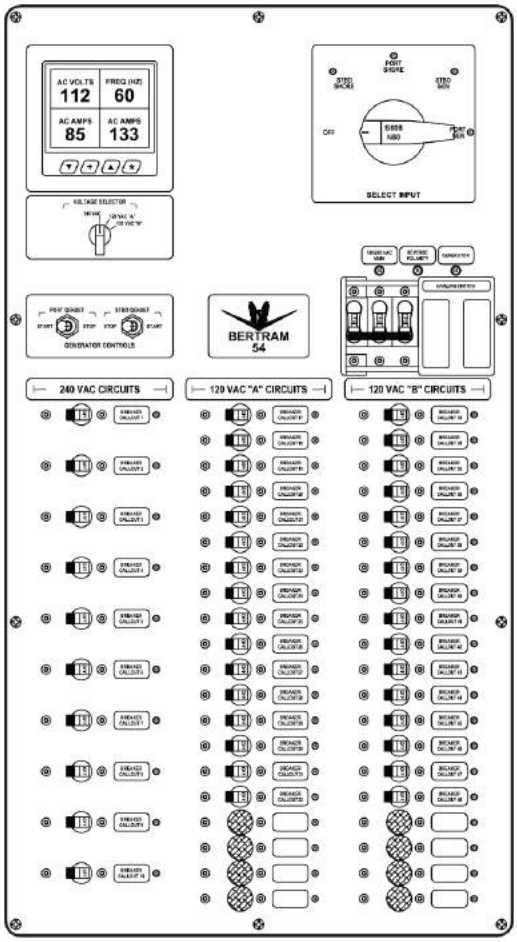

 # A24

120/240V AC
Three Pole Master/Slide Source Selector
Digital AC Volt, Amp, Frequency Meter
10 Double Pole, 20 Single Pole (Leg A),
20 Single Pole (Leg B)

Dimensions: 15" x 27.75"

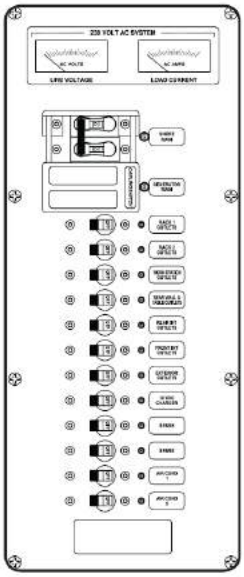

 # A20

120V AC
Double Pole AC Master/
Slide Source Selector
Analog Volt & Amp Meter
12 Single Pole

Dimensions: 9" x 17"

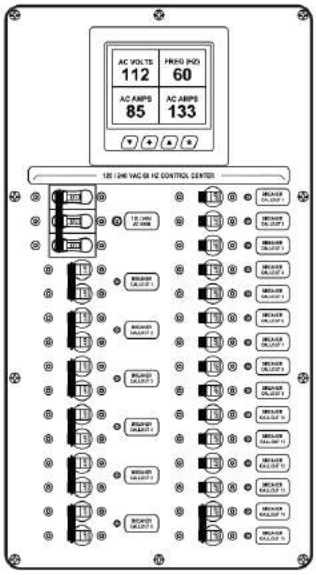

 # A22

120/240V AC
Three Pole AC Master
Digital Volt, Amp,
Frequency Meter
7 Double Pole,
13 Single Pole

Dimensions: 6.75" x 18.5"

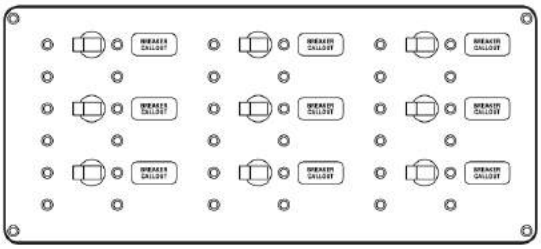

 # A26

240V AC Subpanel
9 Double Pole
Dimensions: 12" x 5.5"

Power Distribution

Custom Panel Templates - AC/DC

Go to Webpage!

Built as Shown or Customized to Any Specification.

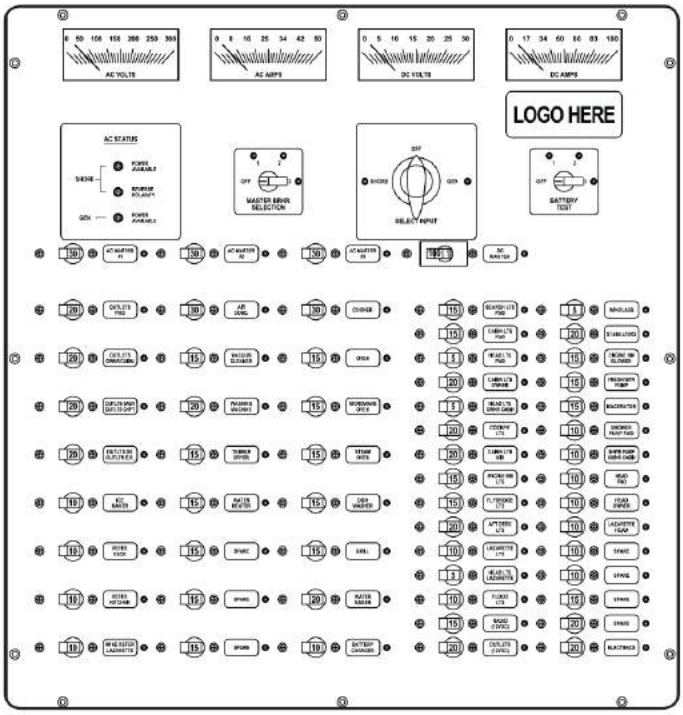

AD10

240V AC / 24V DC
AC Source Select Switch
Analog AC Volt & Amp Meters
27 Double Pole
DC Master
Analog DC Volt & Amp Meters
30 Single Pole

Dimensions: 21" x 22"

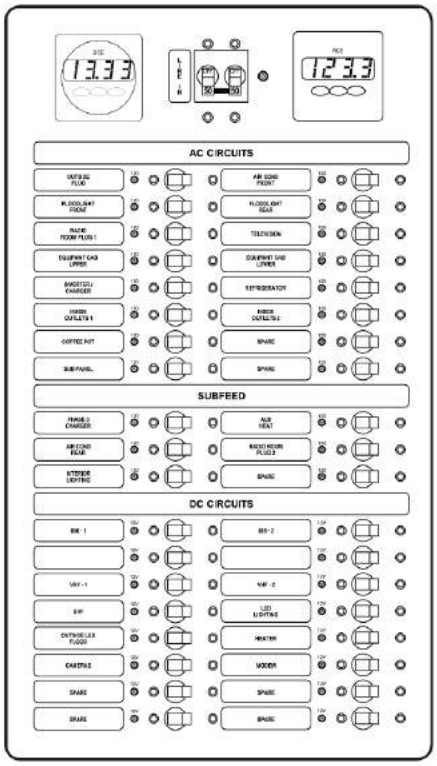

AD14

120V AC / 24V DC
AC Master Digital AC Volt, Amp, Frequency, Meter
16 Main Load Single Pole, 6 Sub Feed Single Pole
DC Master
Digital DC Volt Meter
16 Single Pole

Dimensions: 12" x 21"

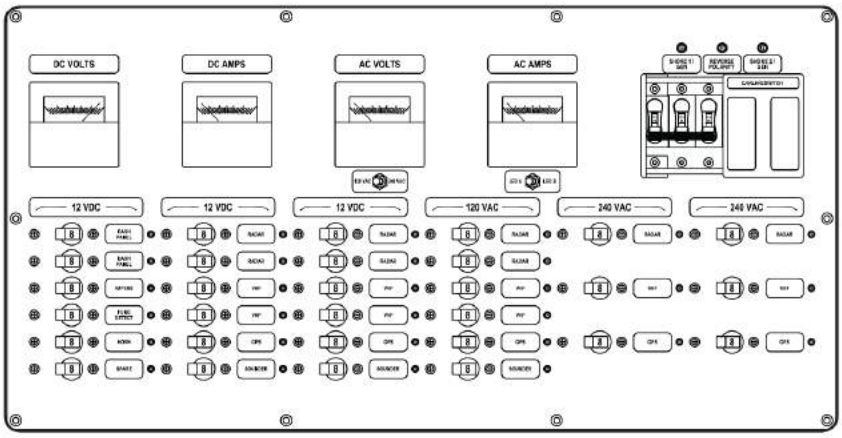

AD12

240/120V AC / 12V DC
AC Master/Slide Selector
Analog AC Volt & Amp Meter
6 Double Pole 240V AC,
12 Single Pole 120V AC
DC
Analog Volt & Amp Meter
18 Single Pole

Dimensions: 23" x 11.8"

Power Distribution

Custom Panel Templates - AC/DC

Built as Shown or Customized to Any Specification.

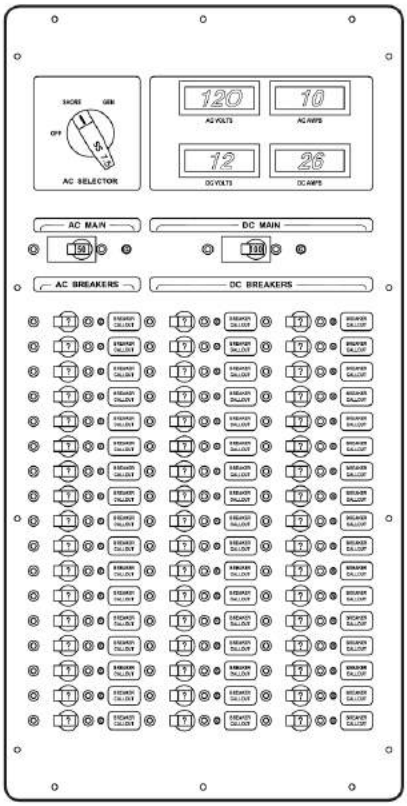

 # AD16

120V AC - 12V DC
AC Master
Source Selector Switch
Digital Volt & Amp Meters
17 Single Pole
DC Master
Digital Volt & Amp Meter
34 Single Pole

Dimensions: 12″ x 24″

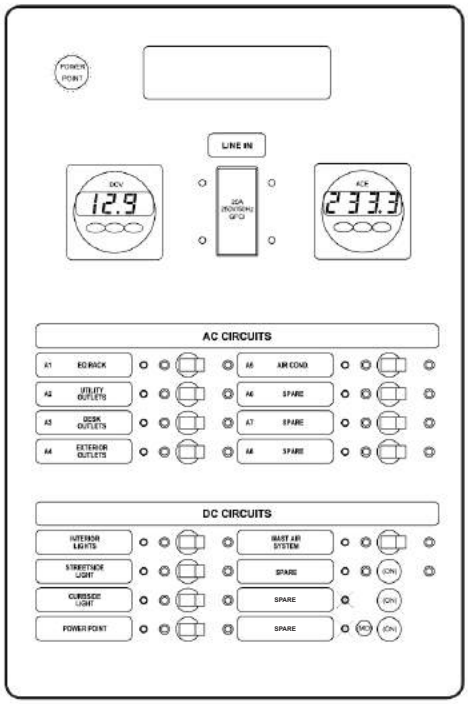

 # AD18

120V AC - 12V DC
AC Master
Digital Volt-Amp Freq-Hour Meter
8 Single Pole
DC Master
Digital Volt Meter
8 Single Pole

Dimensions: 12″ x 24″

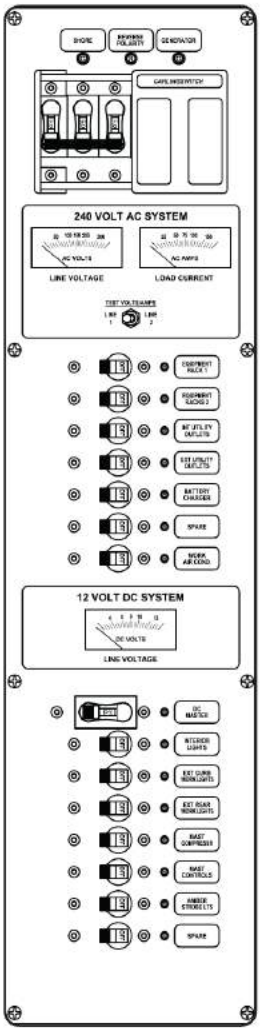

 # AD20

120V AC - 12V DC
AC Master/Source Selector
Analog AC Volt
& Amp Meters
7 Single Pole Branch Breakers
DC Master
Analog DC Volt Meter
7 Single Pole

Dimensions: 5.7″ x 23″

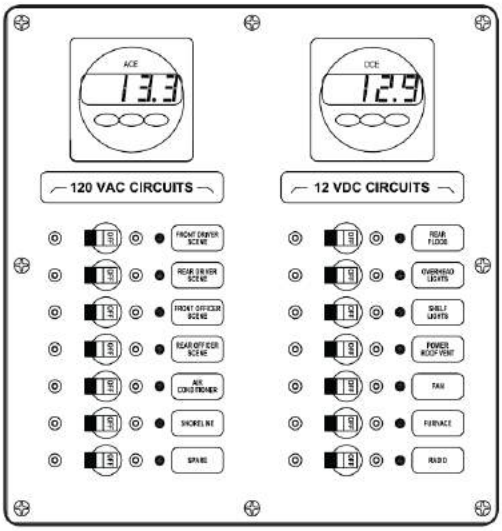

 # AD22

120V AC - 12V DC
AC Single Pole
DC Master
Digital Volt & Amp Meter
7 Single Pole
Digital Volt Meter
7 Single Pole

Dimensions: 10″ x 10.5″

Power Distribution

Custom Panel Templates - DC

Go to Webpage!

Built as Shown or Customized to Any Specification.

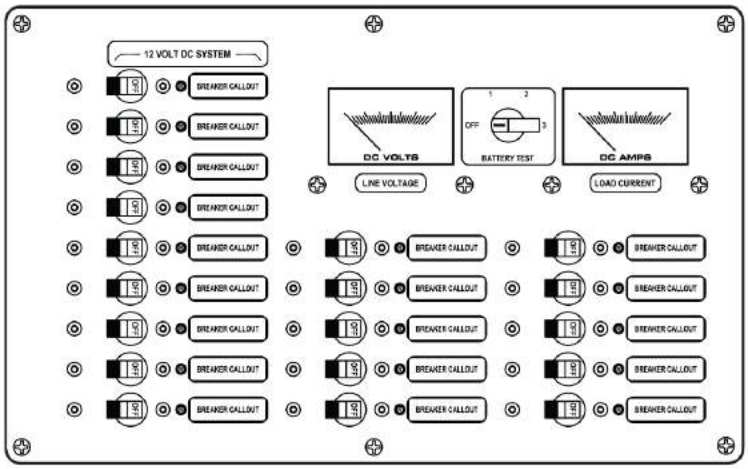

 # D10

12/24V DC
19 Single Pole Branch Circuits
Analog DC Volt & Ammeters
3 Battery Test Switch

Dimensions: 8.5" x 13.75"

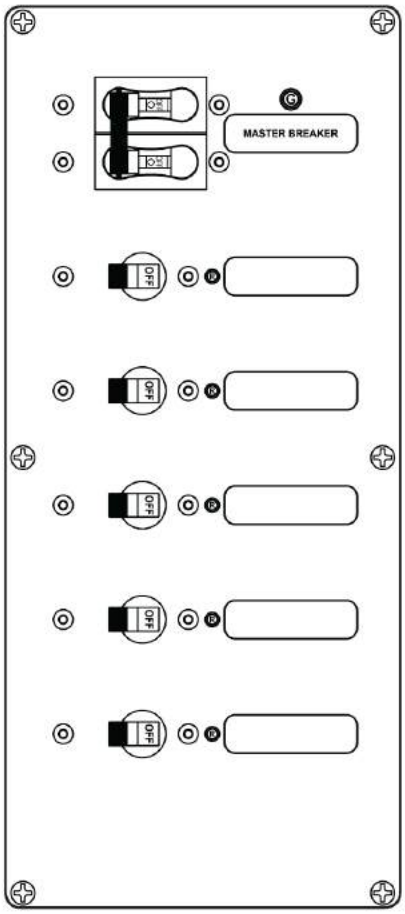

 # D14

12/24V DC
Double Pole Master
5 Double Pole Branch Circuits

Dimensions: 14.5" x 9.5"

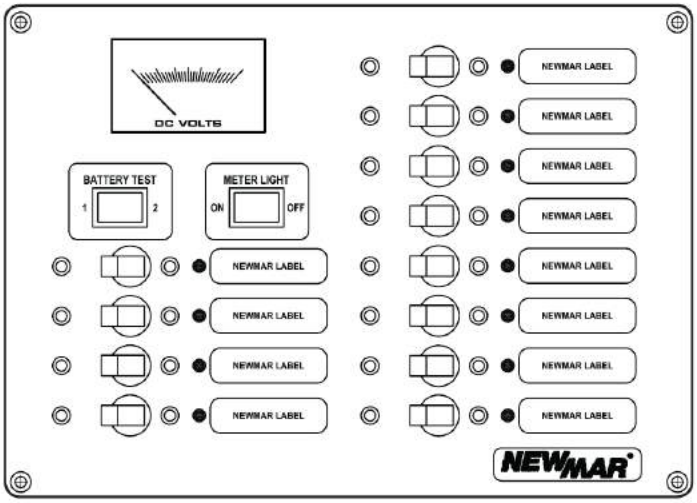

 # D12

12V DC
Analog DC Volt Meter
12 Single Pole

Dimensions: 10.5" x 7.5"

Power Distribution

Custom Panel Templates - DC

With Ground Fault Test Circuit.

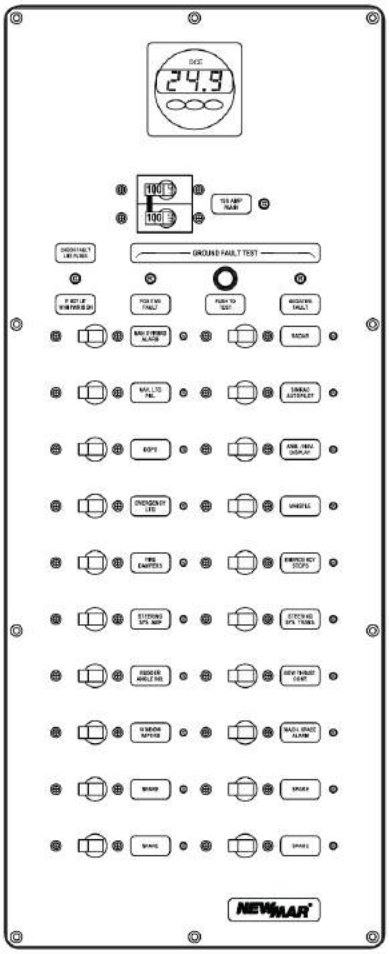

GF10

12/24V DC
Digital DC Meter,
Double Pole Master,
20 Double Pole Branch Circuits,
Ground Fault Test Circuit*

Dimensions: 25" x 10"

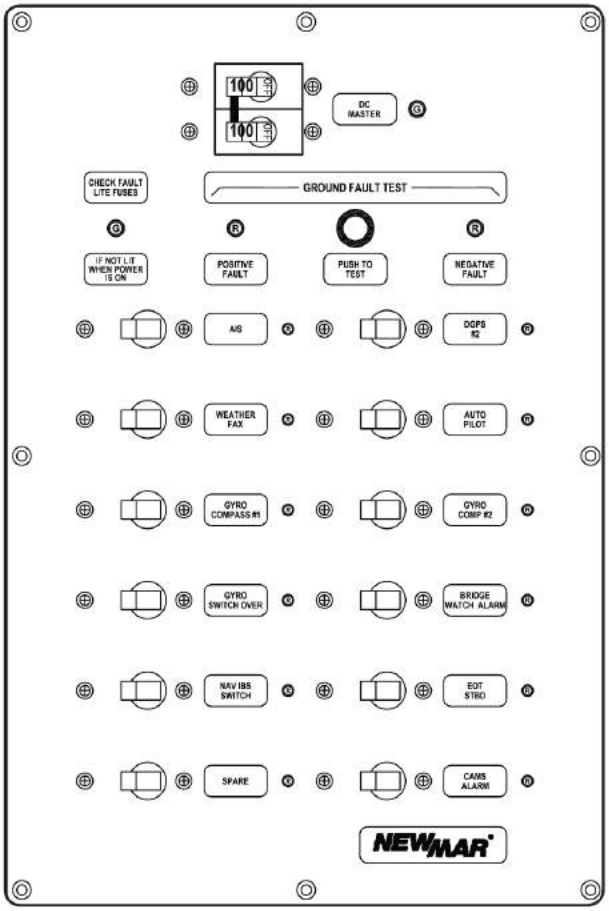

GF12

12/24VDC
Double Pole Master,
12 Double Pole DC
Branch Circuits,
Ground Fault Test Circuit*

Dimensions: 10" x 15"

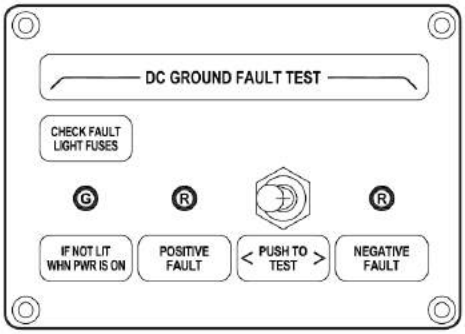

DC Ground Fault Test # GF14

Dimensions: 3.75" x 5.25"

12/24VDC
Double Pole Master,
14 Double Pole Branch Circuits,
Analog Volt & Ammeters
Ground Fault Test Circuit*

Dimensions: 10" x 21"

***For Isolated Systems**

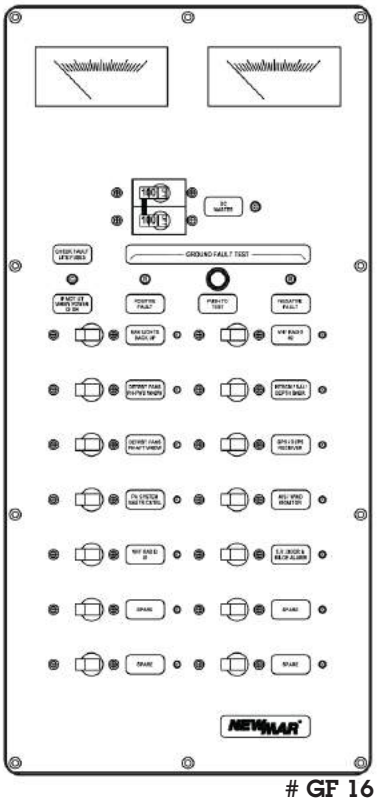

GF 16

Power Distribution

AC Source Switches

Go to Webpage!

An AC source selector switch is an essential item for any vessel with an on-board AC generator and/or inverter. By isolating power source inputs, the switch eliminates the safety hazard and/or damage that can occur if two AC sources are applied to the same circuit simultaneously.

These switches are fitted with a compact escutcheon plate with engraved switch position nomenclature.

SS-3.0

SS-7.5 INV

The switches carry cUL approval, are CE marked, and feature heavy duty contacts and a positive step cam mechanism for low resistance contact closure. May be rear mounted in panel with thickness up to 1/4".

Model	Amperage @ 115/230V	Number of Poles	Switch Positions	Standard Plate Markings	Depth Dimensions
SS-3.0	30	2	2 + "OFF"	SHIP-OFF-SHORE	2-1/8"
SS-7.5	63	2	2 + "OFF"	SHIP-OFF-SHORE	2-3/8"
SS-7.5 INV †	63	2	3 + "OFF"	OFF-GEN-INV-SHORE	3-1/2"
SS-15*	126	2	2 + "OFF"	SHIP-OFF-SHORE	4"

* May be configured as a 63 amp, 4 pole switch

† For vessels with onboard generator and inverter

Mounting Flange Dimensions

All standard switches

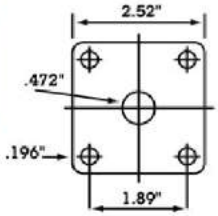

If none of the standard switches listed above meet your requirements, Newmar will custom configure an AC selector switch for you. Please allow 2 weeks for shipment. Contact factory for pricing.

1) Determine the following:

A) Amperage/kW rating required
B) Number of switch positions required
C) Number of poles required

2) Use the chart below to determine model number

Amperage/kw Rating @ 120 VAC	2 Position Plus Off 2 Pole	2 Position Plus Off 3 Pole	3 Position Plus Off 2 Pole	3 Position Plus Off 3 Pole	4 Position Plus Off 2 Pole	4 Position Plus Off 3 Pole
63 Amp (7.5 kw)	SS-7.5	S-632	S-623	S-633	S-624	S-634
80 Amp (10 kw)	S-822	S-832	S-823	S-833	S-824	S-834
100 Amp (12.5 kw)	S-1022	S-1032	S-1023	S-1033	S-1024	S-1034
125 Amp (15.5 kw)	SS-15	S-1232	S-1223	S-1233	S-1224	S-1234

3) Select the desired switch selector position labeling:

SHORE	GEN	PORT SHORE	PORT GEN
SHORE 1	GEN 1	STBD SHORE	STBD GEN
SHORE 2	GEN 2	INV	

or specify the position labeling you require.

Mounting Flange Dimensions

63 and 80 amp special order switches

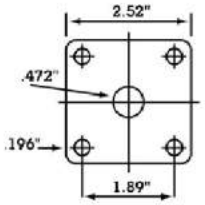

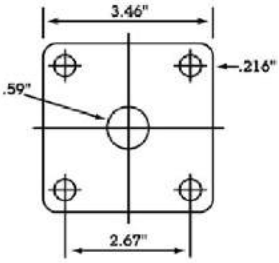

100 and 125 amp special order switches

Power Distribution

NEWMAR

DC Power Onboard

Meters

Digital Instruments for AC/DC Systems

Page 58

Digital Meters - Generator & Engine

Page 60

Go to Webpage!

Panel Meters - Analog

Page 61

NEWMAR

DC Power Onboard

Digital Instruments for AC/DC Systems

These digital instruments provide comprehensive monitoring of onboard AC and DC electrical systems. They give quick and accurate information on all important aspects of electrical system status – voltage, current, power consumed, power available, and AC frequency accuracy is +/- 1%.

Programmable visual and audio alarms alert of abnormal system conditions: Low/High Voltage and Low/High Frequency. An optional sensor, model DIR, will relay the alarm signal to remote monitor panel/audio devices.

All read-out modes and alarm programming of multiple functions are easily controlled via touch-pads on the instrument face. LCD displays are easily read in bright sunlight and feature five level adjustable back-lighting for conservation of night vision. High/low voltage and frequency alarms, and DC monitors are NMEA 0183 compatible.

The meter/touch-pad and surrounding bezel are fully waterproof are suitable for installation in exposed above deck areas (provided there is no water ingress to the rear of the mounting surface).

All models are designed for through-bulkhead mounting.

ACE: AC Energy Monitor

For 115/230 volt systems. Reads: 90-300 VAC (True RMS), 0-150 amps, frequency from 40-70 Hz and power from 0-45 kW. Features alarm circuits for high/low voltage and high/low frequency. Can be programmed to provide automatic generator shutdown (see Remote Alarm Option on the following page) in the event that voltage or frequency exceed predetermined range. Current and voltage transformers are included. 12 or 24 volt source required to power meter. Available in 2-1/2" face.

Go to Webpage!

Instrument Dimensions & Mounting Options

2-1/2" model depicted. Large Scale Instruments use identical size mounting hole and hardware configuration.

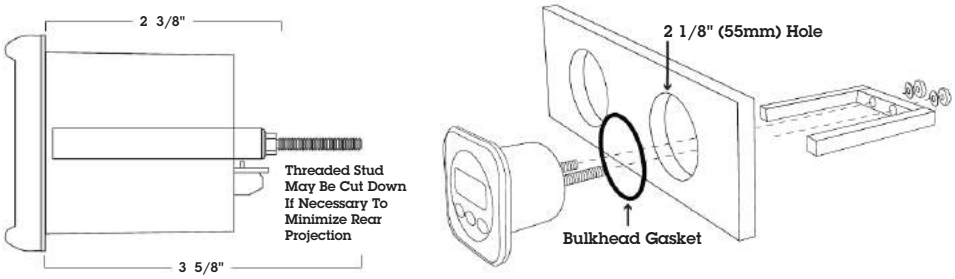

Digital Instruments for AC/DC Systems

Go to Webpage!

DCV: DC Voltmeter

Monitors three battery banks, 12 and/or 24 volt systems. Reads to the nearest 1/10 volt. Features a programmable high/low voltage alarm circuit for each bank. NMEA 0183 compatible for PC interface. Only available in 2-1/2" version

DCE: DC Energy Monitor

Displays volts, amps, energy used and remaining for 12 or 24 volt systems up to 500 amps and up to 3,000 amp-hour capacity. Makes DC energy management a breeze. Monitor voltage on up to three separate banks. House bank (or battery bank of choice) may be also be programmed for the following functions: 1) Monitor charge/discharge amperage. 2) Total energy monitor can be set for amp-hours or percent-of-charge. 3) High/low voltage alarm, plus alarm set-point for low amp-hours remaining. 500 amp shunt included. NMEA 0183 compatible output for data logging. Available in 2-1/2" or 4-1/4" square face, see below.

DCE-VAH-100: Large Scale Version of DCE

Large LCD read-out design. Digits are an easy-to-read 1 1/4" tall, allowing monitoring from a distance. Large button keypads make programming and function selection a breeze!

All instrument ratings and functions are identical to the DCE described above. Mounting hole requirements and hardware are also identical to standard scale models.

Instrument face dimensions: 4-1/4" x 4-1/4", (110 x 110 mm)

Remote Alarm Relay Option - All Models

All instruments shown have programmable alarms. A relay is available that activates remote indicators from the instrument alarm signal output terminal allowing remote activation and/or connection to the vessel's 12 or 24 volt alarm panel.

Model

DIR Digital Instrument Relay
Input Signal: 5 VDC (from instrument)
Relay Rating: 12/24 VDC, 10 amps
Size: 2.4" x 1.4" x 1.5"

Digital Meters - Generator & Engine

Go to Webpage!

Generator Power Monitor

This versatile and compact (4" x 4") color LED display instrument provides simultaneous read out of generator and shore power data: AC Voltage, Frequency, Amperage of two 120V legs of 240V circuit. Programmable alarm settings on each function produces 85 db audio alert as well as visual red blinking display. In addition, the Generator Monitor logs cumulative generator operation hours with programmable service interval hour settings and notification.

AC Volt-Amps-Frequency-Hour Meter

Features

- Large ½" high LED digits in high visibility green
- 4 functions, all display simultaneously on one screen: Volts, Amps, Frequency
- Hour meter displays when generator is off
- Easy function and alarm programming via 4 button key pad, with on screen menu settings.
- 4 level adjustable LCD brightness settings
- Programmable alarms: HIGH/LOW for volts and frequency and HIGH alarm for amps (2 lines). Alarm modes: Red warning color visual indication, plus built in 85 db audible, with output signal for external alarm relay
- User programmable service hour interval settings and notification (password protected)
- 150 amp Current transformers (2 X) provided
- DC powered 9-33 VDC, with low power consumption sleep mode (<20 ma) to conserve batteries
- Low profile and compact display. Size: 4" x 4"
- Panel mount: 2-1/8" hole
- Waterproof instrument face

Mounting Diagram VAAFH & VOTT Meters

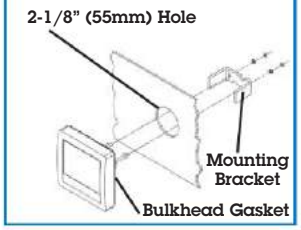

Model	Electrical			Dimensions			Wgt.
	Operating Volts	Sense Voltage	Max. Power	H	W	D	
VAAFH	9 - 33V DC	120/240V AC	36 kW	4.0"	4.0"	2.7"	2 Lbs.

Engine Function Monitor

The Engine Monitor is a compact 4" x 4" color LED display that provides simultaneous read out of vital engine data including: DC Voltage, Oil Pressure, Temperature, and Tachometer from J1939 can bus. Programmable alarm settings on each function produces 85 db audio alert as well as visual red blinking display.

Engine Volt-Oil-Temp-Tach Meter

Features:

- Large 4" x 4" LED display provides simultaneous read-out of vital engine operation data
- 4 level adjustment brightness settings
- Programmable alarm set points for oil, temp and voltage, and RPM
- Alarm programming via 4 button key pad
- Internal audio alarm with remote alarm output signal
- Waterproof meter face
- Input signal wire assembly with waterproof Deutsch connector.
- Panel mount: 2-1/8" hole

Go to Webpage!

Model	Electrical Data		Dimensions			Wgt.
	Operating Volts	Input Signal	H	W	D	
VOTT	9 - 33	J 1939	4.0"	4.0"	2.7"	2 Lbs.

Panel Meters - Analog

Go to Webpage!

Assemble an electrical monitoring system using these analog, panel mount meters. Meters are available with 2-1/2" and 3-1/2" face sizes.

Easy to read graphics with unit divisions give precise readouts at a glance. Designed for front panel mounting.

AC Meters

- AC Volt 0-150
- AC Volt 0-300
- AC Amp 0-50 with current transformer
- AC Amp 0-100 with current transformer

DC Meters

- DC Volt 8-16
- DC Volt 16-32
- DC Amp 0-50 with shunt
- DC Amp 0-100 with shunt

Replacement Shunts/Current Transformers

- Shunt for 0-50 DC ammeter
  P/N: 573-0502-9
- Shunt for 0-100 DC ammeter
  P/N: 575-100-0
- Current transformer for 0-50 AC ammeter
  P/N: 575-9030-0
- Current transformer for 0-100 AC ammeter
  P/N: 575-9030-0

Meter Face Measurements

3.5" scale: 3-3/4" W x 2-7/8" H (9.5 X 7.3 cm)

2.5" scale: 2-1/2" W x 2-3/8" H (6.3 X 6.0 cm)

Cut Out Dimensions

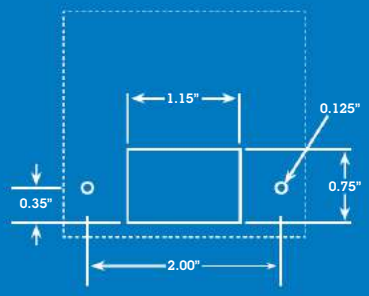

2-1/2" Scale Meter

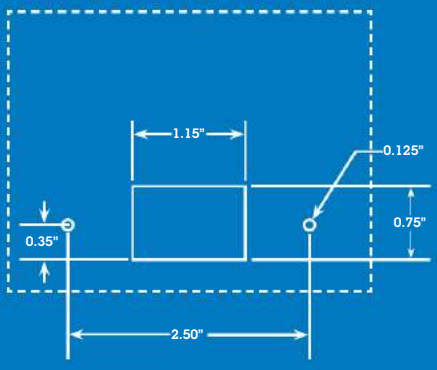

3-1/2" Scale Meter

Dimensional Drawings not to scale

Accessories

Go to Webpage!

Circuit Breakers

Page 64

Go to Webpage!

Waterproof Circuit Breakers

Page 65

Go to Webpage!

High Current Fuses

Page 66

Go to Webpage!

Terminal Strips & Bus Bars

Page 67

NEWMAR DC Power Onboard

Accessories

Go to Webpage!

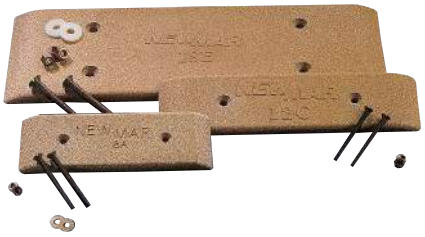

RF Ground & Antenna Accessories

Page 68

Go to Webpage!

Galvanic Isolators

Page 69

Go to Webpage!

BX Series Splashproof Boxes

Page 70

Go to Webpage!

PX Series Waterproof Boxes

Page 71

Go to Webpage!

Electrical Enclosures & Cable Entries

Page 72

Go to Webpage!

Waterproof Fittings Thru-Dex® Series

Page 73

Go to Webpage!

Test Equipment

Page 74

Go to Webpage!

Phone-Com Systems

Page 75

Go to Webpage!

Portable Radio & Phone Covers

Page 76

Go to Webpage!

Hailer Horns

Page 77

Panel Accessories - Circuit Breakers

Go to Webpage!

Accessories

Standard Series: Single and Double Pole - "A" Frame Size

- Fit all NEWMAR electrical panels, as well as most other brands
- Feature magnetic-hydraulic "trip-free" mechanism 5-30 amp rated to 65 VDC or 277 VAC; 40 and 50 amp rated to 32 VDC or 120 VAC (See rating note below).
- Mounting screws not provide order separately
- #10 screw terminals on rear for wiring

All circuit breakers offered by NEWMAR are UL recognized and CSA listed for AC and DC systems and meet USCG requirements.

- Black toggle handles
- Single pole values: 5, 10, 15, 20, 25, 30, 40 or 50 amp.
- Double pole values: 15, 20, 30 or 50 amp

Important Circuit Breaker Rating Note: Standard series breakers shown on this page which are rated higher than 30 amps are acceptable for use in 230 VAC Line-to-Line systems (where each leg is 115 VAC - to - neutral), but are not rated for 230 VAC line-to-neutral systems.

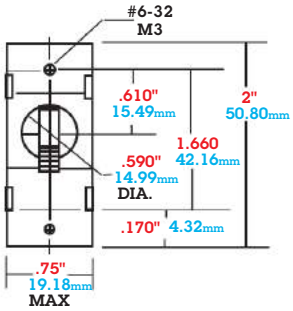

Double Pole

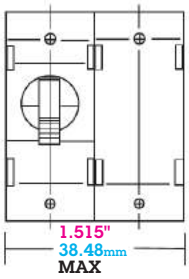

High Amperage Series: Single Pole - "C" Frame Size

Rated for up to 65 VDC or 120/240 VAC service

- Feature auxiliary contacts for optional remote monitoring of circuit breaker status (Form C)
- 1/4" studs on rear for wiring

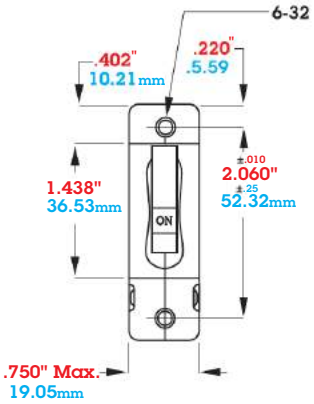

Options

- Current rating of 75 or 100 amps
- Black toggle handle
- Two 6-32 screws required for mounting; not included – order separately

High Amperage Series - Double Pole "C" Frame Size

- 30, 50, or 100 amp
- Black toggle handle
- Dual black toggle handle with tie-bar

2-Pole (CA2)

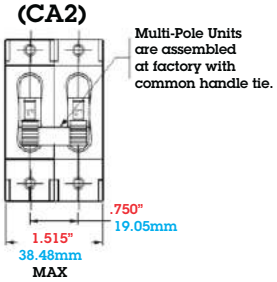

Waterproof Circuit Breakers

Go to Webpage!

Waterproof, High Amperage Surface Mount Circuit Breakers.

Features

- Combines switching and circuit breaker function in one unit
- Compact size and surface mount configuration protects high amperage circuits at virtually any location: ideal for windlass, bow thrusters, high power feeds to distribution panels in boat and trucks
- Trip delay curve accommodates high surge amperage for motor start
- Push to disconnect button de-energizes circuit for maintenance
- Latch arm resets breaker after overload, but cannot be held in "ON" position if short remains on circuit
- 1/4" terminal studs with protective covers secure wiring
- Waterproof - ideal for marine and truck applications
- Ignition protected for safe use in gasoline powered applications
- Available in clam shell retail display pack, or bulk packed 12 per case lot

Electrical Specifications

Voltage: To 42 VDC max.

Amperage Ratings: 50-80-100-120-150

Trip Sensing: Thermal

Max Interrupt Current: 3000 amps

Mechanical

- High impact plastic molded case
- Ignition Protected
- Water Proof
- ¼" termination studs with protective covers.

Case size: 1-7/8" W x 2-7/8" D x 1-3/4" H

Mounting: 2 ea. 1/4" holes, mounting hardware not provided.

Weight: .2 lbs.

Model	Amperage
WBS-50	50A
WBS-80	80A
WBS-100	100A
WBS-120	120A
WBS-150	150A

High Current Fuses/Fuseblocks

Go to Webpage!

Essential safety item for all inverter installations and other high amperage DC circuit over-current protection.

Features

- Heavy duty 500 amp, insulated, compact fuse block with corrosion-resistant 5/16″ studs
- Secures to surface with two #10 flat head screws or bolts (not included)
- Clear lexan cover insulates conductive parts, per ABYC/USCG requirements
- Accepts industry standard ANL tin-plated copper fuses. Purchase separately.
- See-through mica element for easy identification of blown fuse

Model	Size (H x W x D)
AFB-500	3″ x 6.25″ x 1.95″

Fuse Models (numeral indicates amperage): ANL-50, ANL-100, ANL-150, ANL-200, ANL-250, ANL-300, ANL-350, ANL-400, ANL-500 (All rated to 80 VDC)

Label Sets

Ideal for custom labeling of switch or circuit breaker positions on any NEWMAR or similarly constructed electrical panel. White lettering on black peel-and-stick mylar. Label size: 1.75" W x .5" H

Indicator Lights

Use as "circuit on" or service indicator light on AC or DC systems. Snap-in panel mount in 5/16" hole. 6", 18 AWG leads.

Models:

Model
115/230 VAC Amber*
115/230 VAC Red
115/230 VAC Green
12/24 VDC Red*
12/24 VDC Green

** Standard replacement light for Newmar panels available in skin pack or bulk pack.*

Panel Back Enclosures

Secure to the rear of many common electrical panels to protect crew against injury or panel against damage from accidental contact. Heavy duty ABS plastic. May be cut or drilled to suit wiring needs. (Intermediate mounting surface between panel and enclosure required)

Model	Fits these Newmar Panels	Size (H x W x D)
BE-855	ACCY-IX, ACCY-IBX, AC-IX	8″ x 5″ x 5″

Terminal Strips & Bus Bars

Go to Webpage!

Terminal Strips

- Use as a common negative/neutral bus for AC or DC systems. Dual terminal strips in 4 or 8 screw positions on 3/4" centers are secured to a high density insulated base. All hardware, bus material and fasteners are nickel-plated brass.
- Interlocking bases allow use of multiple terminal strips and bus bars (described below) to produce secure and neat wiring assemblies. The terminal strip bases have provisions for either #8 or #10 mounting screws, and no conductive parts in the base are exposed to the mounting surface.
- # 8 screw terminals; rated to 100 amps

TS-2x4

Interlocking Feature

Model	Total # of Base Terminals	Size
TS-2x4	8	3-1/16" x 1-1/2"
TS-2x8	16	6-1/16" x 1-1/2"

Bus Bars

Ideal as a DC ground tie point or positive bus, these heavy duty, 500 amp rated bus bar assemblies feature 5/16" studs on 1" centers in 1/4" thick copper bar for common connection/distribution of large wire gauges and accommodate 5/16" ring terminals.

- Insulated base (reinforced nylon resin with clear protective cover)

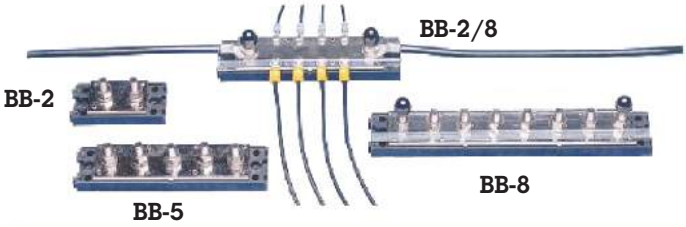

Model	Qty. of 5/16" Studs	Size
BB-2 3	2	1/16" x 1 1/2"
BB-2/8	2 plus 8 - #8 screws	6-1/16" x 1-1/2"
BB-5	5	6-1/16" x 1-1/2"
BB-8	8	9-1/16" x 1-1/2"

Connector Strips

Molded nylon encases 6 or 12 pairs of connectors that use screw compression to secure wires without use of lugs - ideal for electronic installations. Brass barrels capture wires and are held in place with a stainless steel "finger" compressed by a screw. The screw does not make contact with the wires, protecting the copper strands from cuts and breakage. Same connector strip used in BX Series boxes, see page 71.

- 3 Sizes: ranging from 6 to 16 gauge strips are easily cut to meet wiring requirements and space limitations.

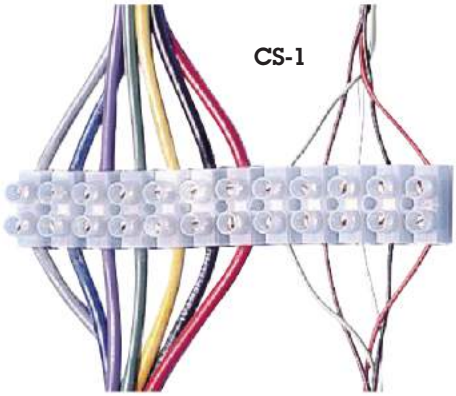

Model	# of Terminal Pairs	Max Wire Gauge	Max Amps*	Size (L X W X H)
CS-1	12	16	6	3.75" x .675" x .5"
CS-2	12	14	10	4.5" x .75" x .75"
CS-3	12	12	16	5.5" x .875" x .8"

*Per terminal

RF Ground & Antenna Accessories

Go to Webpage!

Copper Strap

- Ideal conductor for RF grounding of SSB radios and other noise sensitive transceivers or for bonding of thru-hulls, etc.
- Flexible – easily conforms to vessel contours
- .01" (25mm) thick – see matrix for available lengths and widths

Copper Screen

- Tight copper mesh (.05" x .01" wire spacing) ideal for creating a ground plane in hull. Length: 25'; Width: 4'
- May be placed into electronics enclosures to provide an RF barrier.

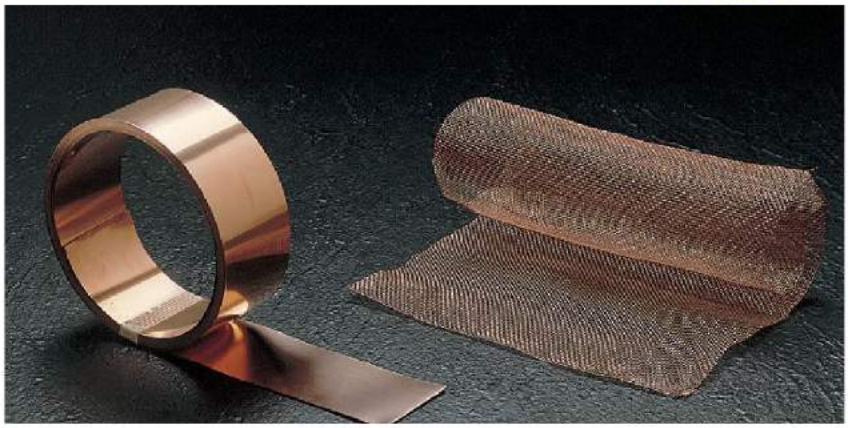

Model	Width	Length	Weight
GS-2-25	2"/5.1 cm	25'/8 meters	3 lbs./1.4 kg
GS-2-50	2"/5.1 cm	50'/17 meters	5 lbs./2.3 kg
GS-2-100	2"/5.1 cm	100'/33 meters	8 lbs./3.6 kg
GS-4-100	4"/10.2 cm	100'/33 meters	16 lbs./7.3 kg
Screen-25	4'/1.2 meters	25'/8 meters	16 lbs./7.3 kg

Ground Shoes

- Provide an excellent noise-free RF ground by making direct contact with water outside hull.
- Porous copper construction magnifies contact area – see matrix for surface area equivalent
- Silicon bronze hardware provided (Not intended for lightning protection)

Mounting Hole Spacing

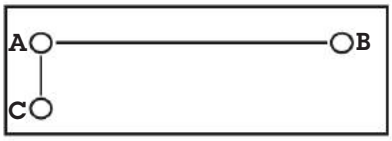

Mounting Hole Dimensions								
	Dimensions		Center to Center		Hole	Ground Area Equivalent		Weight
Model	Inches	Centimeters	A-B	A-C	Diameter			Lbs./Kg.
8A	8.4 x 2.7 x .5	21.3 x 6.9 x 1.3	4-1/2"	N/A	1/4"	20 sq. ft.	6.1 M2	3/1.4
12C	11.8 x 3.1 x .5	30.0 x 7.9 x 1.3	6"	N/A	5/16"	40 sq. ft.	12.2 M2	4/1.8
18E	17.6 x 6.1 x .5	44.7 x 15.5 x 1.3	10"	3"	5/16"	100 sq. ft.	30.5 M2	11/5

Antenna/Coax Switches

Model: CS-201

Two position switch allows manual selection of one of two antennas with a single radio or one of two radios with a single antenna. Die cast aluminum case.

Power: 1.5 kW peak, 1kW continuous
Impedance: 50 ohm, **Connectors:** S0-239/UHF

Model: Spring Clip

All stainless steel. For securing standard mobile radio microphone.

NEWMAR

DC Power Onboard

Galvanic Isolators

Go to Webpage!

Sacrificial zincs corrode away as they protect metal thru hulls, shafts and props from damaging electrolysis. Stray, low voltage current flowing between the AC safety ground and DC bonding system is a principal cause of this "galvanic" action.

Installing the Galvanic Isolator between the AC safety ground and DC bonding system (see diagram), blocks a majority of the low voltage currents and corrosive action on the zincs is significantly reduced (while the integrity of the critical safety ground path is maintained.) This means a significant savings in boat haul-out fees and zinc replacement costs.

For additional safety, all units feature a large capacitor, providing a secondary low impedance path for sending AC current to ground.

Two models are offered; rated for 30 or 50 amp shore-power.

Typical Wiring

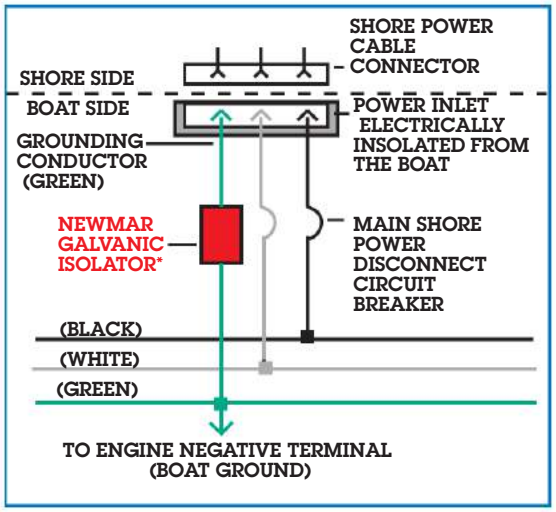

Model	Shore Power		Dimensions				Weight	
	VAC, Hz	Rating, Amps	H	W	D		Lbs.	Kg.
GI-30	115/230, 50-60	30	2.7 6.9	4.8 12.2	7.3 18.5	in. cm.	2.45	1.1
GI-50	115/230, 50-60	50	4.5 11.4	4.7 11.9	8.9 22.6	in. cm.	3.2	1.5

PX Series - Waterproof Boxes

Go to Webpage!

Graduated Diameter, Flexible Cut-to-Fit Cable Entries

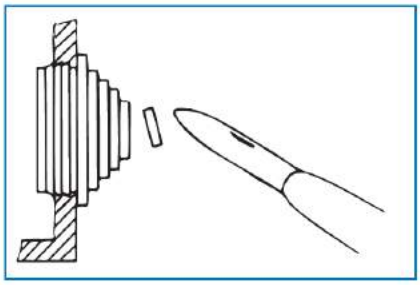

PX Series: Waterproof Junction Boxes

- Ideal for making wiring connections above or below decks, even in areas subject to occasional spray
- Similar to BX Series junction boxes, but made from rugged, non-corrosive, high impact polypropylene
- Snap-on cover provides watertight seal
- "Universal" cut-to -fit (see diagram) graduated diameter cable entries accommodate wide cable range
- Multiple position connector strips with "captive" screw compression wire terminals installed, see matrix below for connector strip specifications per box
- Multiple knockouts provided for conduit access (in addition to cable entries)
- IEC Waterproof Rating: IP55 – "Water projected in jets against the enclosure from any direction shall have no harmful effects."

Model	PX-1	PX-2	PX-3
Number of Connector Strips	1	2	2
Positions per Strip	6	6	9
Max Wire Gauge	16	16	16
Number of Cable Entry Ports	5	7	7
Number of Cable Entries Installed	3	7	7
Spare Cable Entries Provided	2	0	0
Cable Diameter Range (inches)	.14 - .81	.14 - .81	.14 - .99
Cable Diameter Range (mm)	3.5 - 20.5	3.5 - 20.5	3.5 - 25.5
Box Size (inches)	2.95 x 2.95 x 1.66	3.35 x 3.35 x 1.66	4.45 x 4.45 x 2.29
Box Size (cm)	7.5 x 7.5 x 4.2	8.5 x 8.5 x 4.2	11.3 x 11.3 x 5.8

Connector Strips Installed in Boxes

Molded nylon encases pairs of connectors that use screw compression to secure wires without use of lugs. Ideal for electronic installations. Brass barrels capture wires and are held in place with a stainless steel "finger" compressed by a screw. The screw does not make contact with the wires, protecting the copper strands from cuts and breakage - meets ABYC standards.

BX Series - Splashproof Boxes

Go to Webpage!

Accessories

BX Series: Splashproof Junction Boxes

- Provides for secure, protected wiring connections in wheel house or below decks and engine rooms. IP rating 54 - "Splashproof"
- Rugged cast aluminum box with white enamel finish
- Metal box reduces electrical interference
- Easy wiring access through multiple grommeted cable entries
- Supplied with high quality connector strips - secure wires with compression fittings – no terminals required – see matrix below for connector strips specifications per box

Model	BX-1	BX-2	BX-3
Number of Connector Strips	1	1	2
Positions per Strip	6	12	11
Max Wire Gauge	16	16	14
Max Amps (per position)	6	6	10
Cable Entries	2	8	2
Cable Diameter	.25"	.37"	.59"
Box Size (inches)	2 x 2 x 1.2	4.4 x 2.4 x 1.2	4.7 x 3.7 x 1.3
Box Size (cm)	5.1 x 5.1 x 3.1	11.2 x 6.1 x 3.1	11.9 x 9.4 x 3.3

Connector Strips Installed in Boxes

Molded nylon encases pairs of connectors that use screw compression to secure wires without use of lugs. Ideal for electronic installations. Brass barrels capture wires and are held in place with a stainless steel "finger" compressed by a screw. The screw does not make contact with the wires, protecting the copper strands from cuts and breakage - meets ABYC standards.

Electrical Enclosures & Cable Entries

Go to Webpage!

EX Series: Electrical Enclosures

These enclosures provide functional and professional protective cases for wire connectors, terminal blocks, relays, solenoids, fuses, etc. The corrosion-resistant polycarbonate cases are ideal for marine applications, and the deep cavity design leaves room for securing wiring and components and making connections. In addition, instruments, switches and panels can be surface mounted to the cover, as there is ample space for rear projection and wiring.

DC Power Onboard by Newmar provides Electrical Enclosures and Cable Entries. EX Series Electrical Enclosures provide functional and professional protective cases for wire connectors, terminal blocks, relays, solenoids, fuses, etc. Cable Entries have many models to choose from with waterproof or splash-proof enclosure cable entries in various sizes.

The enclosures have gasketed covers with captured non-corrosive securing screws and offer various levels of water resistant integrity per installer option, depending on type of cable entry used (see below). Waterproof entries provide IP68 protection while the splash-proof entries are rated at IP54. Two Splash-proof entries are (model SPF-1) included with the enclosures.

Application example - EX-474 shown with digital instruments mounted in cover

Enclosure mounting points are located in the bottom of the box and caps for waterproof sealing of the mounting holes are provided. Also supplied is an internal base plate with stand-off mounts for securing components inside the enclosure.

Knock-outs in numerous sizes are positioned on all four sides of the enclosures, giving the installer many options on cable entry type and location for convenient, professional wiring. (See choices of Cable Entries below.)

Model	Size L x W x D (Inches)	Knock-Outs (size cross-reference below)
EX-373	7.09 x 3.7 x 3.19	14 ea. PG-16
EX-474	7.09 x 4.33 x 4.37	16 ea. PG-16, 4 ea. PG-21, 2 ea. PG-29
EX-1074	7.09 x 10.0 x 4.37	24 ea. PG-16, 8 ea. PG-21, 4 ea. PG-29

Waterproof Fittings

For complete waterproof assembly (IP68) use these compression fittings. Retaining nut secures fitting to enclosers, compression hub creates waterproof seal around wires. Various sizes are available in a wide range of cable diameters.

WPF-3

WPF-2

WPF-1

Model	Cable Diameter Range	Mounting Hole Diameter	EX Enclosure Knock-Out Size Ref.
WPF-1	.2" - .47"	.91" (22.5 mm)	PG-16
WPF-2	.35" - .71"	1.14" (29.0 mm)	PG-21
WPF-3	.55" - .98"	1.48" (37.5 mm)	PG-29

Go to Webpage!

Go to Webpage!

RA Series Right Angle Waterproof Feed-Thru Fittings

Route cables at 90° through vertical and horizontal surfaces with wall hugging low profile design that keeps cable secured close to the surface reducing intrusion with personnel or other equipment/cables.

Molded of nylon, the sculpted shape has no sharp edges and provides smooth 90° radius feed-thru bend in cables without kinks.

Easy installation: slide silicone compression rings on cable, mount base piece with waterproof gasket then attach sealing end cap to create an IP 65 waterproof seal. Note cable must be routed without end connector attached.

Three models to accommodate wide range of cable diameters.

Model	Cable Diameter Range (Inches)	Dimensions (Inches)
RA-1	0.1 - 0.25	2.17 x 1.65 x 0.63
RA-2	0.27 - 0.35	3.23 x 2.44 x 0.95
RA-3	0.39 - 0.47	3.23 x 2.44 x 0.95

CCX Series Waterproof Feed-Thru Fittings

The entry hole is pre-drilled in seal with slit edge allowing feed through of cable with factory installed connector attached; multiple glands cover a wide range of cable sizes. One CCX fitting is required for each cable.

- Create a 100%waterproof seal when routing cables through decks and bulkheads
- Entry hole predrilled in seal with slit to edge
- Allowing installation/removal with connector still attached
- Rugged weatherproof nylon housing with neoprene seal

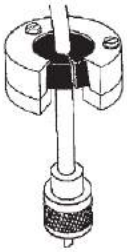

Model	Cable Diameter Range	Max Connector Diameter
CCX-R	.47"-.59"	1.57"
CCX-S	.35"-.55"	.83"
CCX-T	.18"-.35"	.83"

Go to Webpage!

DX Series Feed-Thru Waterproof Fittings

Go to Webpage!

Provided with solid neoprene cable gland, installer drills holes and slits as required to accommodate cable with or without factory installed connector. Multiple cables may be passed through a single fitting.

- Similar to CCX Series except installer drills holes in seal to accommodate cable(s)
- Multiple cables may be routed through a single fitting

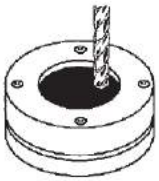

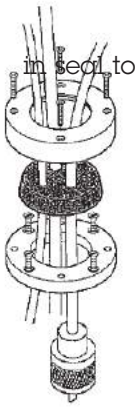

Model	Drill-Thru Aperture	Max. Connector Diameter
DX-2	1.2″	1.2″
DX-3	1.65″	1.65″
DX-5*	2.0″	2.0″

*Aluminum Housing

Go to Webpage!

Digital Battery Analyzer

The Digital Battery Analyzer (model DBA+) is an essential tool for all DC system installers, technicians and battery dealers. Simple to use, it performs a complete analysis of battery condition in mere seconds, then displays conclusive data on a large clear LCD readout.

The DBA analyzes 12 and 6 volt lead-acid, gel-cell and AGM batteries of all types with ratings from 100-1400 CCA. It provides information on battery voltage, battery condition and available battery power. This gives you empirical data to assure your customers that their batteries are fine, or to support your recommendation that they be replaced.

The unit is housed in rugged ABS plastic, yet is light-weight and compact for use in cramped battery compartments and portability in tool kits. It comes equipped with 32" polarity color-coded test leads and quick-connect clamps. The DBA indicates whether the clamps have proper contact with battery posts.

Single-battery banks or batteries connected singly in series may be tested without disconnection. Parallel batteries must be disconnected prior to testing.

No internal battery nor external AC power source is required. Clear and concise operating instructions are provided.

Features

- Analyzes 12 volt and 6 volt lead-acid batteries of all types: flooded, gel-cell or AGM; deep-cycle or gen/engine start
- Simple three step test procedure provides a comprehensive analysis of batteries in seconds.
- No need to recharge batteries prior to testing; accurate results for batteries in any state of charge down to 5.5 volts
- Uses sophisticated conductance technology; will not harm or discharge batteries
- Rugged, compact, light-weight case; easy to use even in hard-to-access battery compartment
- Temperature compensation setting when testing batteries below 32˚F (0˚C)
- Handy water resistant carry-case with shoulder strap provided

Model
DBA

Electrical System Analyzer

Go to Webpage!

An essential tool for any electrical system installer or site maintenance technician, the Electrical System Analyzer provides extremely accurate data on all major AC and DC electrical functions in a convenient hand-held device with large easy-to- read LCD display.

- Voltage up to 400 VAC
- AC Current up to 200 Amps
- Frequency at 50-100,000 Hz
- DC Voltage up to 400 VDC
- DC Current up to 200 Amps
- Electrical Continuity

Model
ESA

Phone-Com Systems

Go to Webpage!

PI-10:
10 Button Phone. Use in Three to Ten Station System

PI-2: Two Station System Phone

PI-10

Accessories

The Phone-Com intercom system provides direct, wired, point-to-point communication. Voice contact to any phone in the system is as easy as lifting the receiver and pressing the call button. Phone-Com operates on 12 VDC. They are constructed of high-impact plastic and are available in either bright white or traditional black. Bulkhead mounting bracket is provided. Two versions are available:

PI-2: Designed for communication between only two points. A single call button sounds a buzzer and illuminates an indicator lamp on the companion phone. Available singly or as a set with 40' of interconnect wire, fuse, terminal lugs and mounting hardware.

PI-10: For multiple station calling capability. Up to 10 phones may be interconnected, and each phone has 10 call buttons. Sold individually.

Phone-Com Wiring: Color-coded multi-conductor interconnect wire (22 AWG) is available from NEWMAR at any length desired with 5, 10 or 15 conductors. For PI-2, use 5 conductor wire. For PI-10, add 3 to the total number of stations to determine minimum number of conductors required.

Note: Phones are not waterproof and should be installed in a protected location.

PI-2: Two station phone with single call button; sold individually; 2 lbs. (Specify White or Black when ordering)

PI-2 SET: Two station phone set, 40' interconnect wire, fuse, lugs, mounting hardware; 5 lbs. (Specify White or Black when ordering)

PI-10: Multi-station phone with 10 call buttons, sold individually; 2 lbs. (Specify White or Black when ordering)

22 AWG Wire: 5, 10 or 15 conductor; sold per foot.

BUZZER: Optional external buzzer for use in high-noise areas

Wiring Diagram

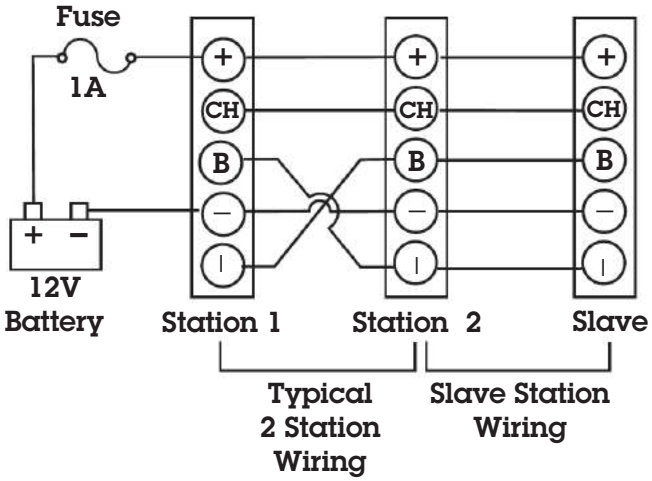

NEWMAR

DC Power Onboard

Portable Radio & Phone Covers

Go to Webpage!

Accessories

AQ Series Waterproof Radio Covers

When the AQ Series waterproof cover is used for protection, hand-held radios can be taken anywhere without being damaged by water, dust or sand. Even total immersion will not harm the radio. These covers are certified waterproof to a depth of 33 feet.

The case is made of super-tough, UV resistant TPU (thermoplastic polyurethane), which is engineered with enough flexibility to facilitate easy operation of knobs and keypads. Transparent design allows easy reading of digital displays. Sound is virtually unimpeded and RF transmission is unaffected.

A quick release clip allows easy insertion and removal of the radio and a handy lanyard provides extra security when hands are wet. But if the radio falls into deep water, no problem! Safely inside the AQ case, it will float!

A new model, the AQ-PRO is designed for public safety professionals, life guards, and mountain rescue teams. A 3-way harness is provided for convenient and comfortable radio front pack. Antenna portion is case doubles as convenient emergency grab and carry handle.

AQ-10L/R

Models

AQ-10L/R: For compact hand-held radios. Reversible design accommodates both left and right hand antennas

AQ-20L/R: For standard size hand-helds. Reversible design accommodates both left and right hand antennas

AQ-PRO: For public safety use, front pack harness provided, accommodates both left and right hand antennas

AQ-PRO

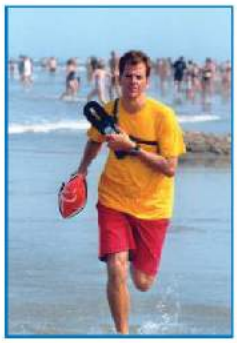

New!

Dimension in Inches

A = Overall height of radio/phone with antenna extended

B = Height of radio/phone body

C = Circumference of radio/phone

Model	A	B	C	Weight
AQ-10L/R	13.3″	7″	7.6″	1 Lb.
AQ-20L/R	15.7″	8.7″	8.7″	1 Lb.
AQ-PRO	4.87″	7.2′	8.5″	1 Lb.

Smart Phone Covers

Protect your valuable smart phone from the elements. Talk and listen right thru the case, cameras and touch screens remain fully operational.

Model	Phone Model	Phone Case Size	
		High	Circumference
SP-108	iPhone 5	5.5″	6″
SP-348	Samsung	6″	8″

SP-108

SP-348

Hailer Horns

Go to Webpage!

PA-60/40
Heavy Duty Commercial

PA-40/20

PA-30/20

PA-8W

Clear, distortion free, waterproof deck horns are ideal for shipboard paging, hailing, fog horn and alarm systems. High impact plastic construction and assembled with stainless steel hardware. 8 Ohm.

Model	Output Nominal / Peak	Weight
PA-8W	8 watts / 12 watts	1 Lb.
PA-30/20	30 watts / 20 watts	3 Lbs.
PA-40/30	40 watts / 30 watts	5 Lbs.
PA-60/40	60 watts / 40 watts	8 Lbs.

Note: Model PA-60/40 is a commercial grade horn which also features excellent sensitivity as a microphone for use in talk-back systems.

Mounting Dimensional Drawings

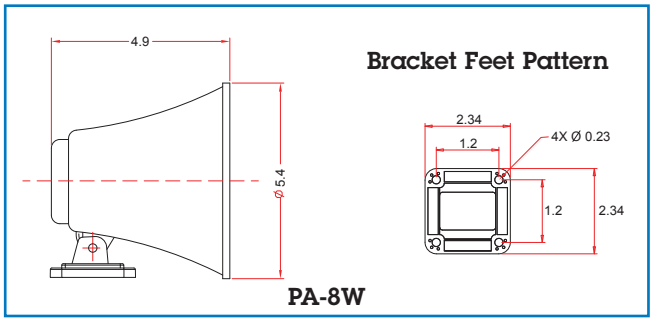

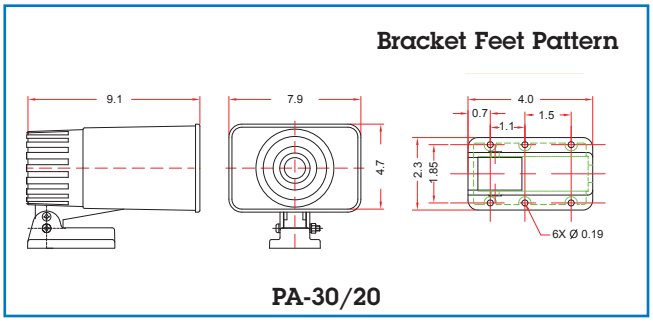

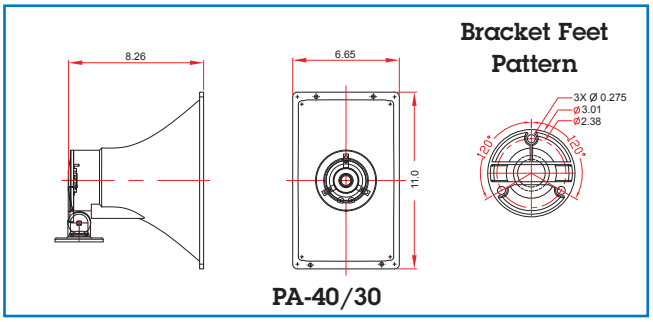

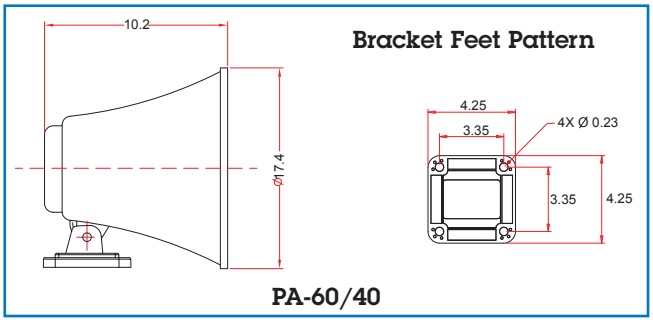

Accessories

Index

Index

Index

NEWAR

DC Power on Board

- Offshore Supply Vessels
- Tug, Tow and Push Boats
- Platform Supply Vessels
- Patrol Boats
- Mega Yachts
- Crew Boats
- Commercial Fishing Boats
- Pilot Boats
- Passenger Ferries
- Military Craft

Powering

- Communications
- Navigation
- Engine Controls
- Batteries
- Emergency Power Systems
- Distribution Panels
- Monitors
- AIS
- GMDSS
- DPS
- Weapons Systems
- Alarms and sensors

MEGAPAC®

DC Power Onboard℠

SINCE 1970