Driven by performance

Bilge water separator
MPEB-VT

Flow rate: 0.25 m³/h up to 10 m³/h

1. Function

The system is intended for separating oil out of oil-water mixtures, in particular bilge water. Solids are also separated. The system is certified in accordance with IMO resolution MEPC.107(49). It also has a 5 ppm certificate.
The MPEB-VT is a compact built, two-stage separator with continuous, reliable operation. The separation takes place consecutively in two different pressure tanks.

Stage 1: Multiphase separator MPS

In the first stage (MPS) multiphase mixtures (water, oil and solids) are separated. This is achieved through flow along the profiled MPS plates and through adhesion forces. Large oil drops form and float upwards into the oil collecting dome. Solids and other heavy substances slide downwards along the profiled MPS plates and collect as sludge at the bottom of the tank.

Stage 2: Mechanical emulsion and foam breaker MESB

In the second stage (MESB) the emulsion from the first stage flows through coalescing elements from the inside to the outside. The finest oil droplets (≥ 1 µm) coalesce in a microfibre bed to form large oil drops which rise up into the oil dome.
The medium is nearly oil-free at the MESB tank outlet.

2. Certification

Classification	Germanischer Lloyd type approval certificate in accordance with IMO resolution MEPC.107(49) module B
Other certificates	RMRS USCG Germanischer Lloyd 5 ppm certificate
Acceptance classification society	upon request by customer

3. Designated use

Medium	Bilgenwasser gem. IMO Entschließung MEPC.107(49)
Inlet oil content	max. 100 % (temporary)
Outlet oil content	max. 5 ppm

4. Operating parameters

MPEB-VT Type	**0.25**	**0.5**	**1.0**	**2.5**	**5.0**	**10.0**
Flow rate [m³/h]	0.25	0.5	1	2.5	5	10
Ambient temperature [°C]	min. 10 - max. 40					
Operating temperature [°C]	min. 15 - max. 50					
Operating pressure [bar]	min. 0.7 - max. 3.5					
Pressure loss [1] [bar]	max. 1.5					

[1] Not included: 0.7 bar pressure maintaining valve

5. Dimensions and weights

MPEB-VT Type	**0.25**	**0.5**	**1.0**	**2.5**	**5.0**	**10.0**
Size H×W×L [mm]	Place of installation is variable see drawing					
1st stage			1350x800x1300	1650x810x2000	1800x1000x2050	1800x1000x2050
2nd stage			1650x500x650	1750x1200x800	1900x1150x1100	2400x1150x1100
Service space H×W×L [mm]	see drawing					
1st stage			1550x1300x1650	1800x1300x3100	1950x1500x3100	1950x1500x3100
2nd stage			1650x500x950	1850x1200x1200	2000x1150x1550	2400x1150x1550
Volume [l]						
1st stage	55	55	230	490	855	855
2nd stage	34	34	47	260	500	750
Weight empty/in operation [kg]						
1st stage	85/140	85/140	150/460	370/860	455/1310	455/1310
2nd stage	66/100	66/100	73/120	190/530	250/750	300/1050

6. Technical data

6.1 Electrical data/Control	
Tension	3x 400 VAC/50 Hz
Protection type	min. IP54
Power consumption [2]	
Operation [kW]	max. 5.(2 pump + 2x oil dome heaters)
Standby [kW]	max. 8 (2x oil dome heaters + 1x standstill heater)
Operating modes	auto-stop
Potential-free contacts	- pump operation - oil-in-water alarm + group alarm
Switchgear cabinet colour	RAL 7035

[2] Depending on the operating/ambient temperature, oil dome or standstill heaters may be switched on automatically

6.2 Tank	
Design pressure [bar]:	3.5
Design temperature [°C]:	60
Test pressure [bar]:	5.25
Safety valve [bar]:	3.8
Design Code:	GL
Material:	steel
Corrosion allowance [mm]:	1
Tank exterior	sandblasted SA 2½, coated*
Tank interior	- sandblasted SA 2½ - zinc sacrificial anodes
Coating:	RAL 5019

* double coating comprising primer coat and top coat – dry layer thickness: 120 µm

6.3 Pump						
MPEB-VT Type	**0.25**	**0.5**	**1.0**	**2.5**	**5.0**	**10.0**
	built-on					
Dry run protection	optional					
Flow rate [m³/h]	0.25	0.5	1	2.5	5	10
Suction height [m]	max. 6					
Discharge pressure [bar]	max. 3					

6.4 Built-in components						
1st stage PPT-BWS	profiled phase separator plates (no consumables)					
2nd stage MESB	coalescing elements order numbers					
	72344111	72344112	72344110	70806193	70806190	70806187

6.5 Options available upon request
3x 440 VAC/60 Hz or 3x 690 VAC/50 Hz
Fine filter unit
Colour/coating
Assembly on frame
Transfer pump
Control and cabling options
ICA - options
Piping package (tank piping[3], oil drain, safety valve, sludge discharge/drain)

[3] Only with frame assembly

7. Drawings

MPEB-VT 0.25 – fig. 1

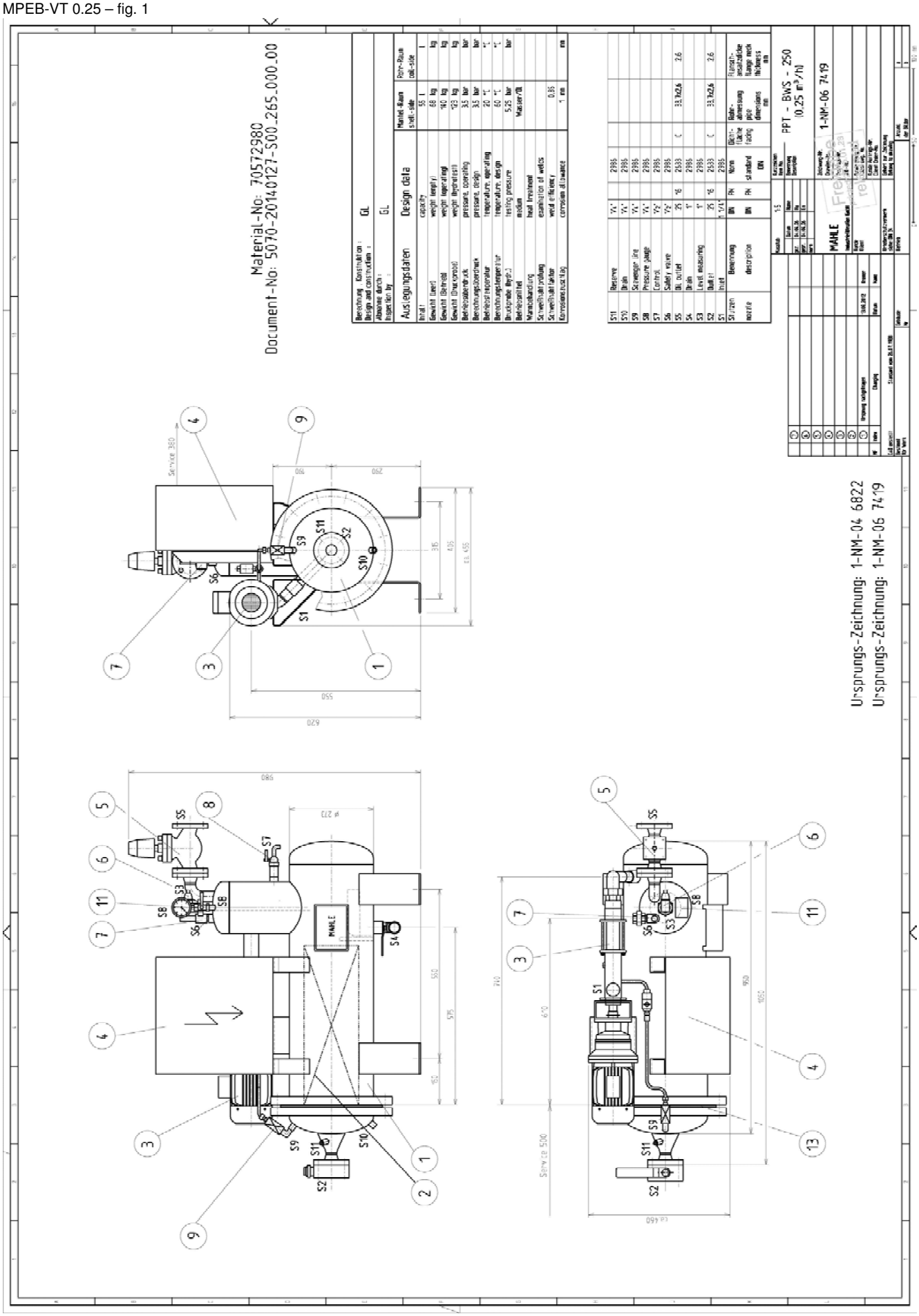

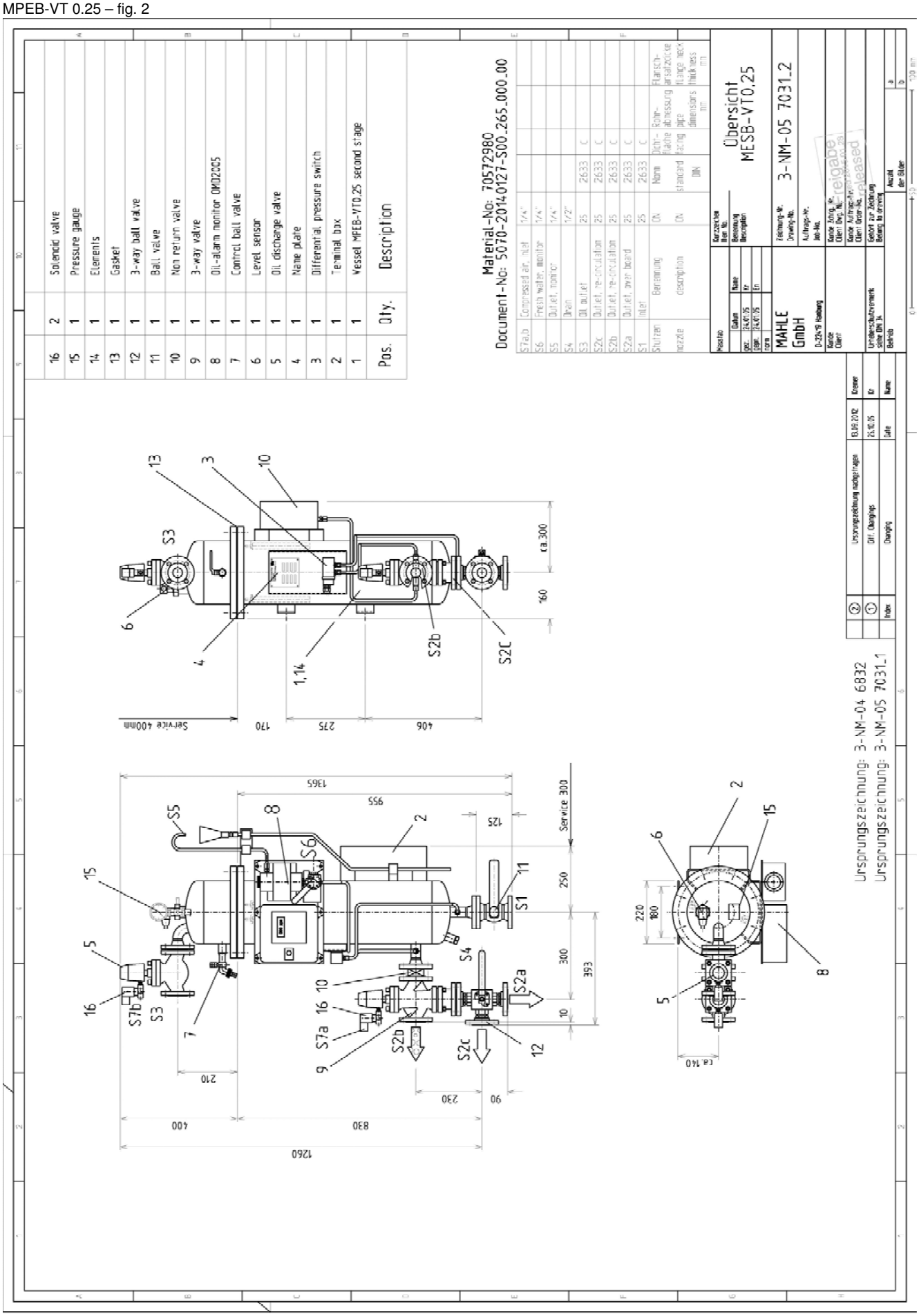
Pos. Qty. Description
16 2 Solenoid valve
15 1 Pressure gauge
14 1 Elements
13 1 Gasket
12 1 3-way ball valve
11 1 Ball valve
10 1 Non return valve
9 1 3-way valve
8 1 Oil-alarm monitor OMD2005
7 1 Control ball valve
6 1 Level sensor
5 1 Oil discharge valve
4 1 Name plate
3 1 Differential pressure switch
2 1 Terminal box
1 1 Vessel MPEB-VT0,25 second stage
Material-No: 70572980
Document-No: 5070-20140127-S00.265.000.00
S7a,b Compressed air, inlet 1/4"
S6 Fresh water monitor 1/4"
S5 Outlet, monitor 1/4"
S4 Drain 1/2"
S3 Oil outlet 25 2633 C
S2c Outlet, re-circulation 25 2633 C
S2b Outlet, re-circulation 25 2633 C
S2a Outlet, over board 25 2633 C
S1 Inlet 25 2633 C
Stutzen nozzle Benennung description DN Norm DN standard facing Dich-Fläche Rohr-abmessung pipe dimensions mm Flansch-ansatzstücke flange neck thickness mm
Übersicht
MESB-VT0,25
3-NM-05 7031_2
MAHLE GmbH
D-22419 Hamburg
Freigabe
released
Service 400mm
170
275
406
160
ca.300
1365
955
125
Service 300
250
300
393
10
1260
830
400
210
230
90
220
180
ca.140
Ursprungszeichnung: 3-NM-04 6832
Ursprungszeichnung: 3-NM-05 7031_1

MPEB-VT 0.5 – fig. 1

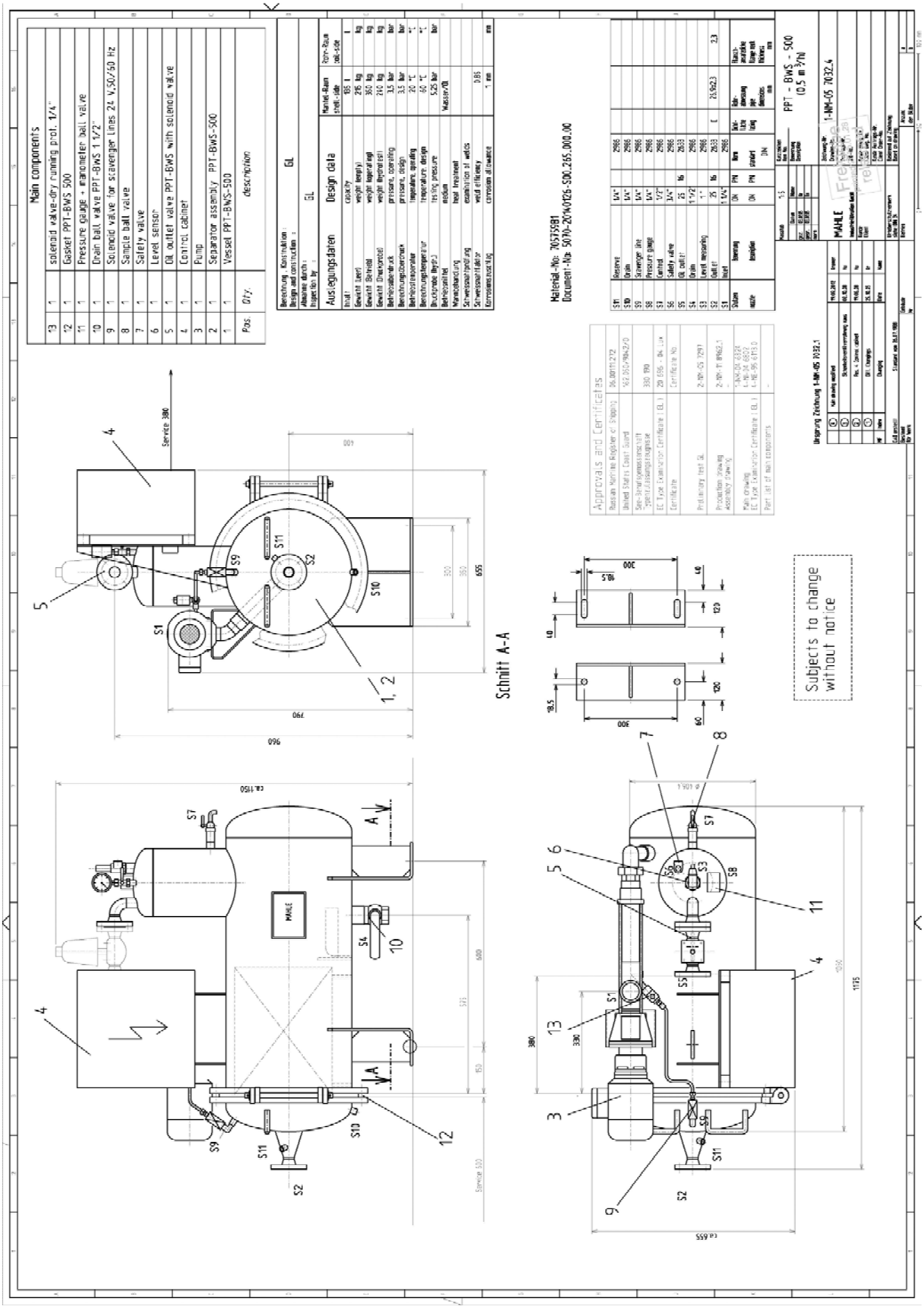

MPEB-VT 0.5 – fig. 2

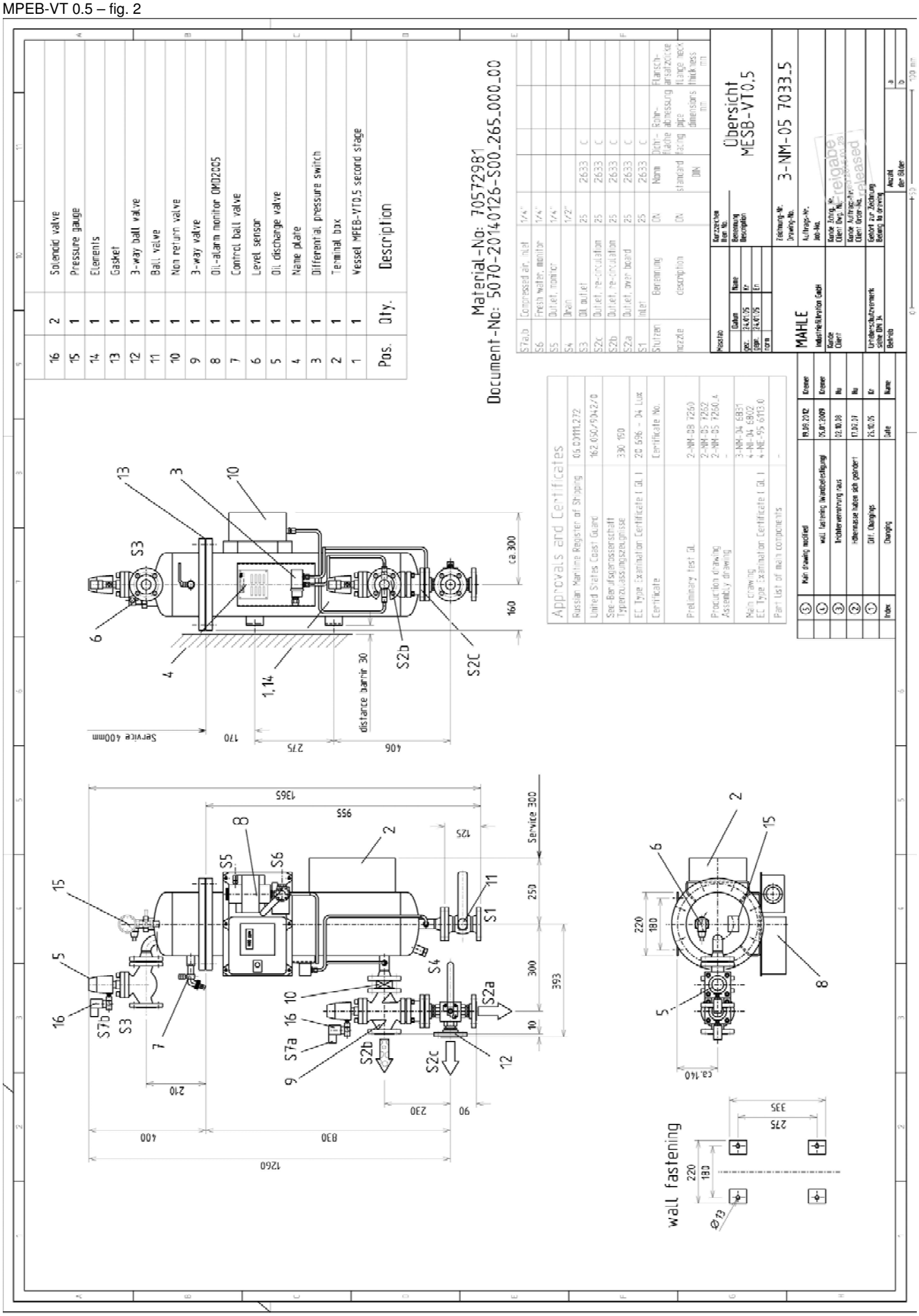

MPEB-VT 1 – fig. 1

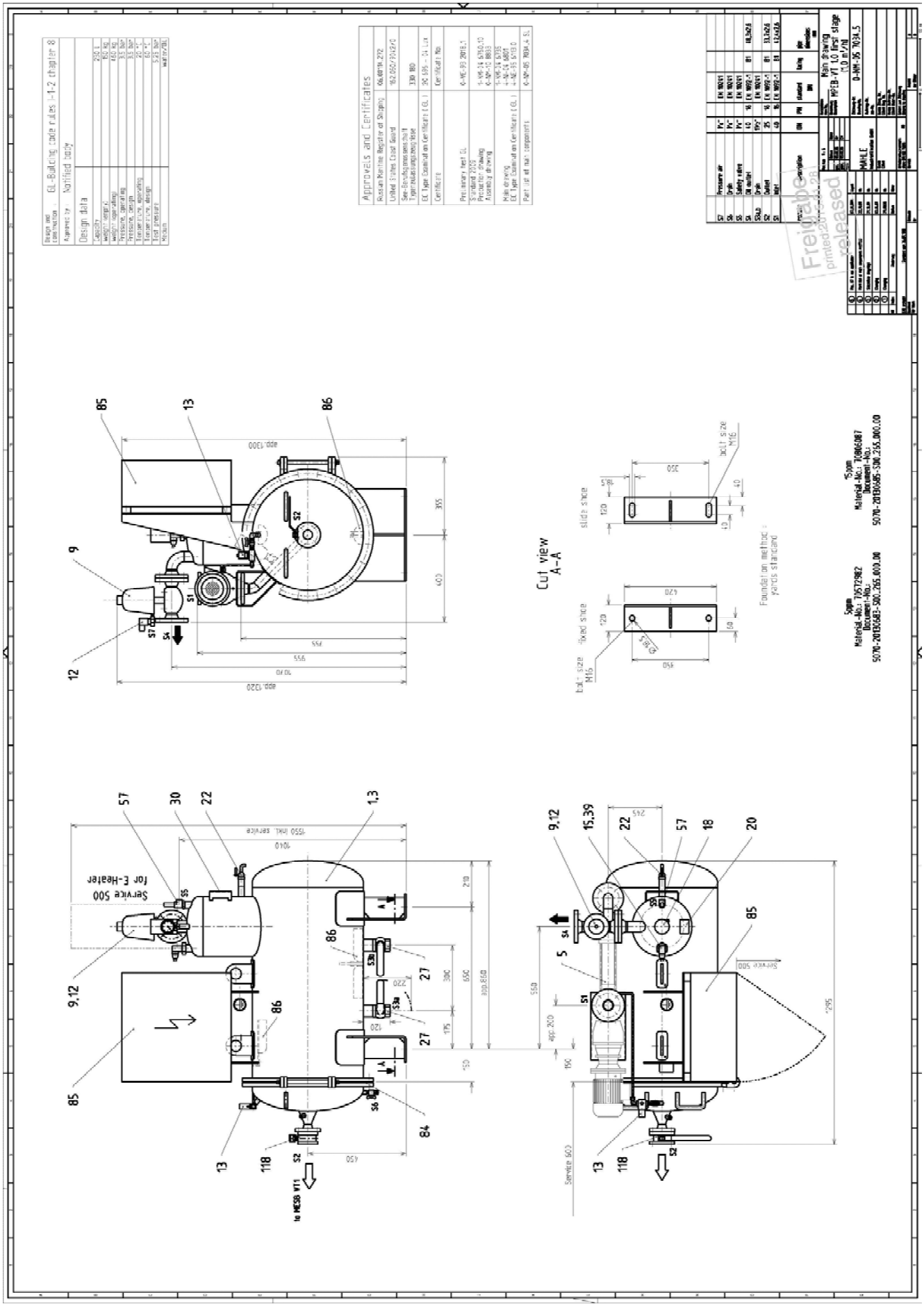

MPEB-VT 1 – fig. 2

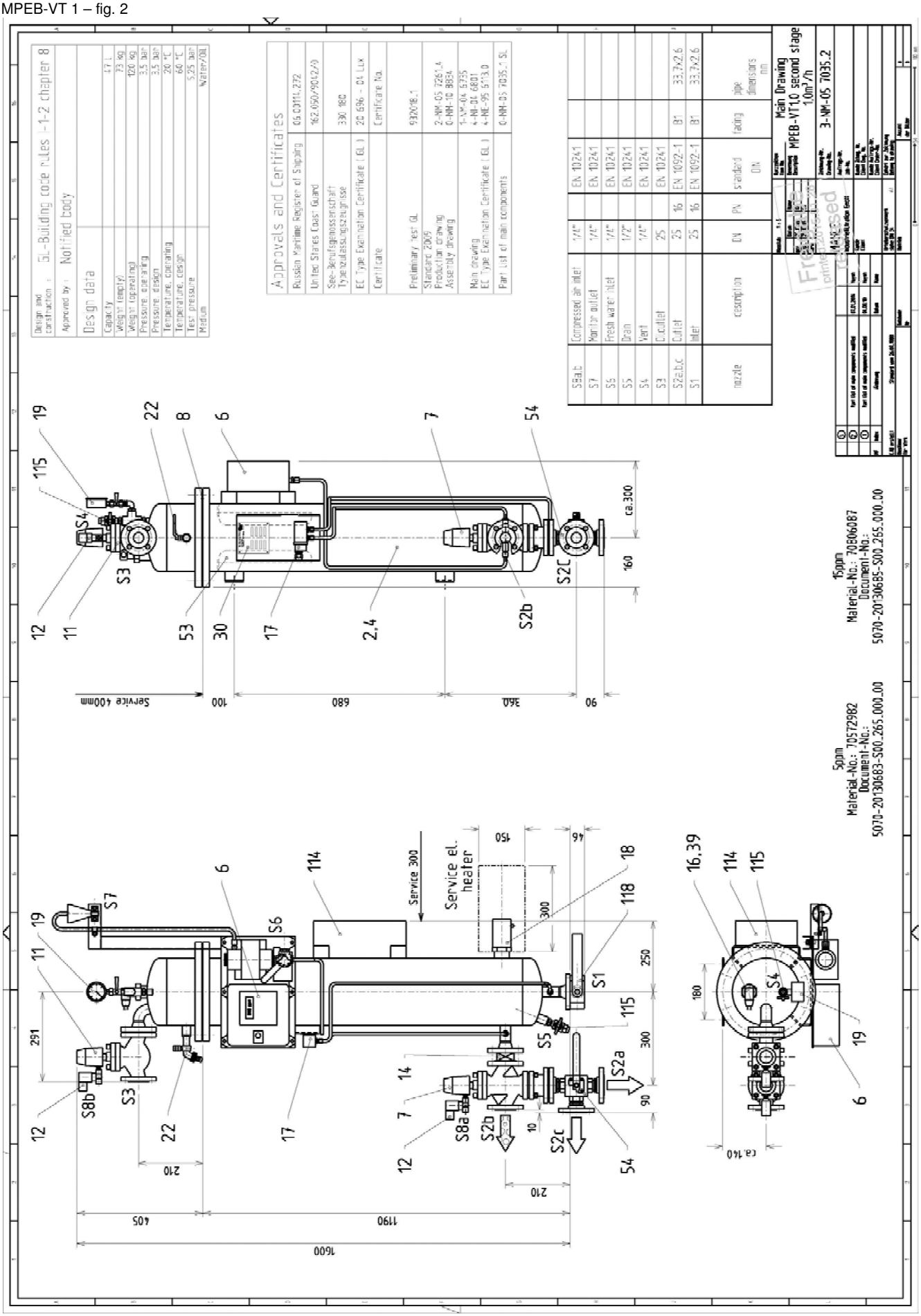

MPEB-VT 2.5 – fig. 1

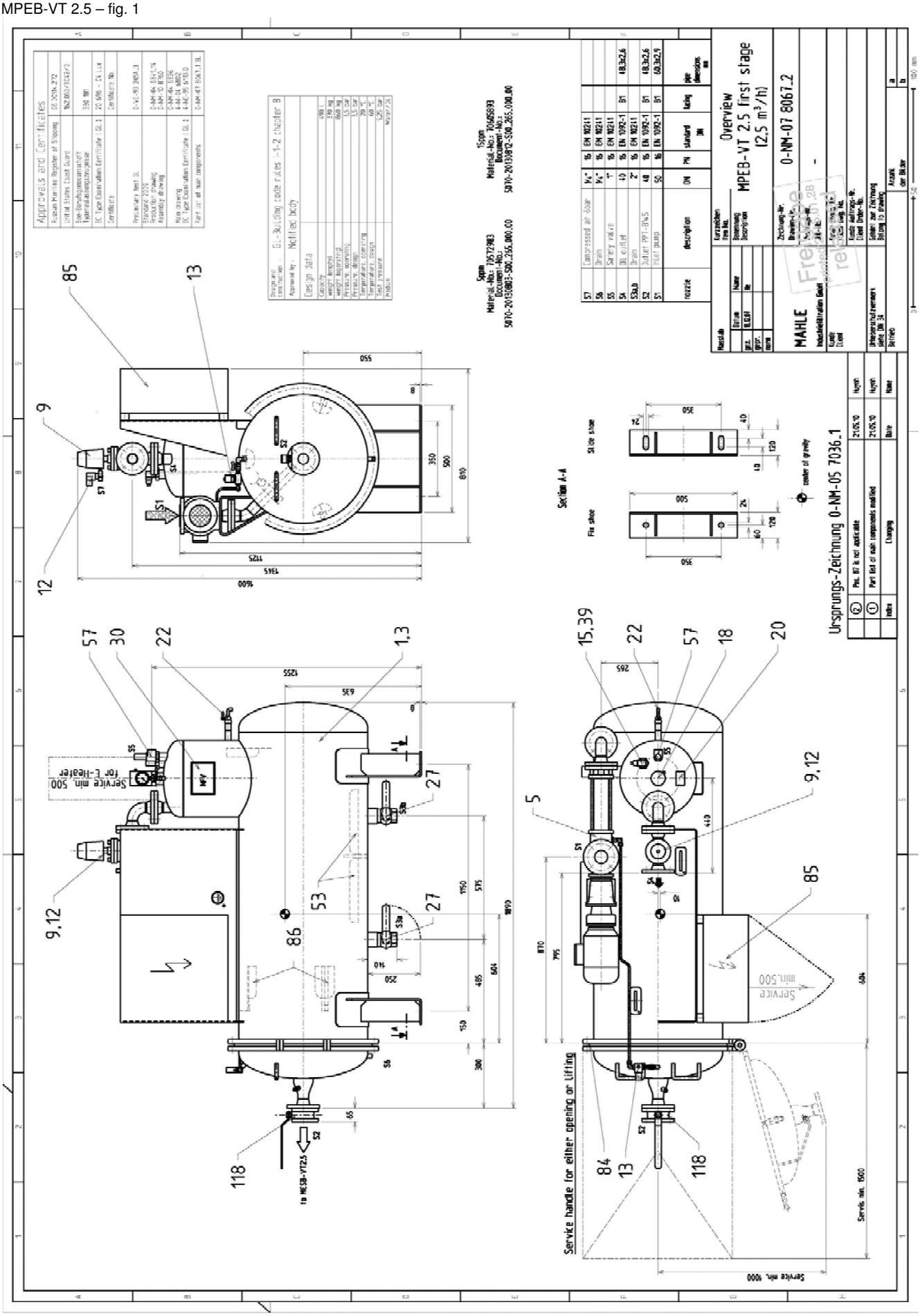

MPEB-VT 2.5 – fig. 2

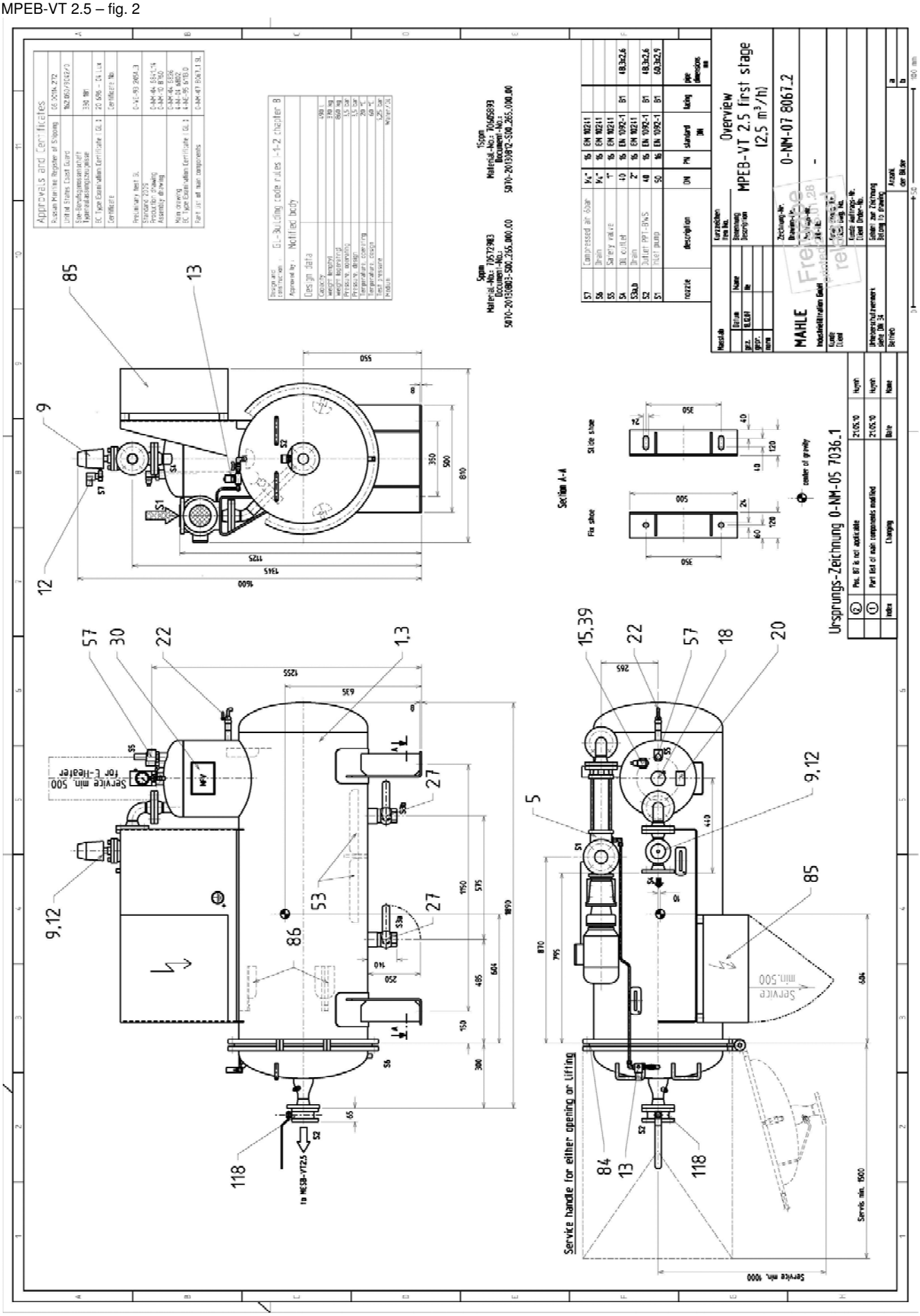

MPEB-VT 5 – fig. 1

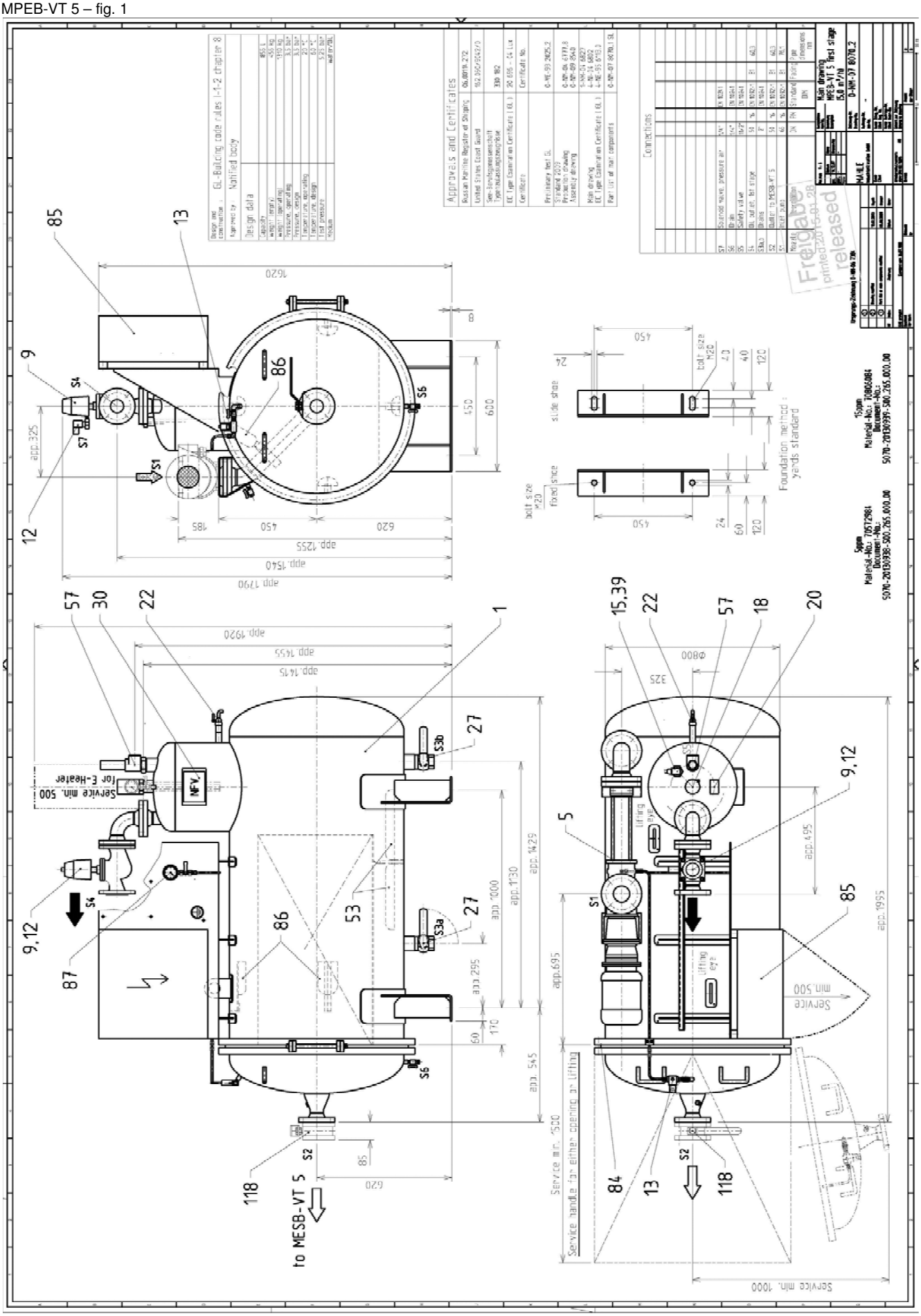

MPEB-VT 5 – fig. 2

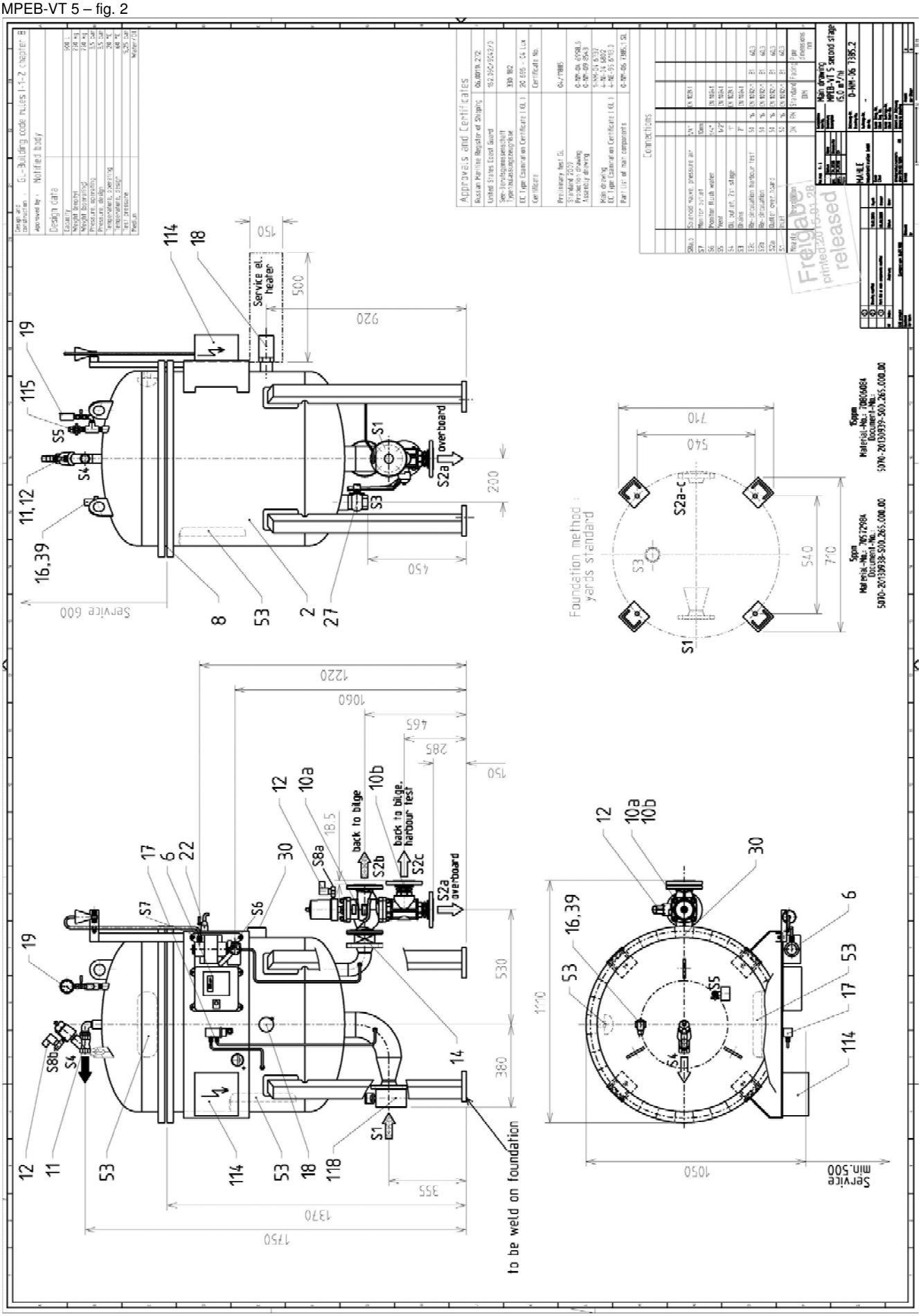

MPEB-VT 10 – fig. 1

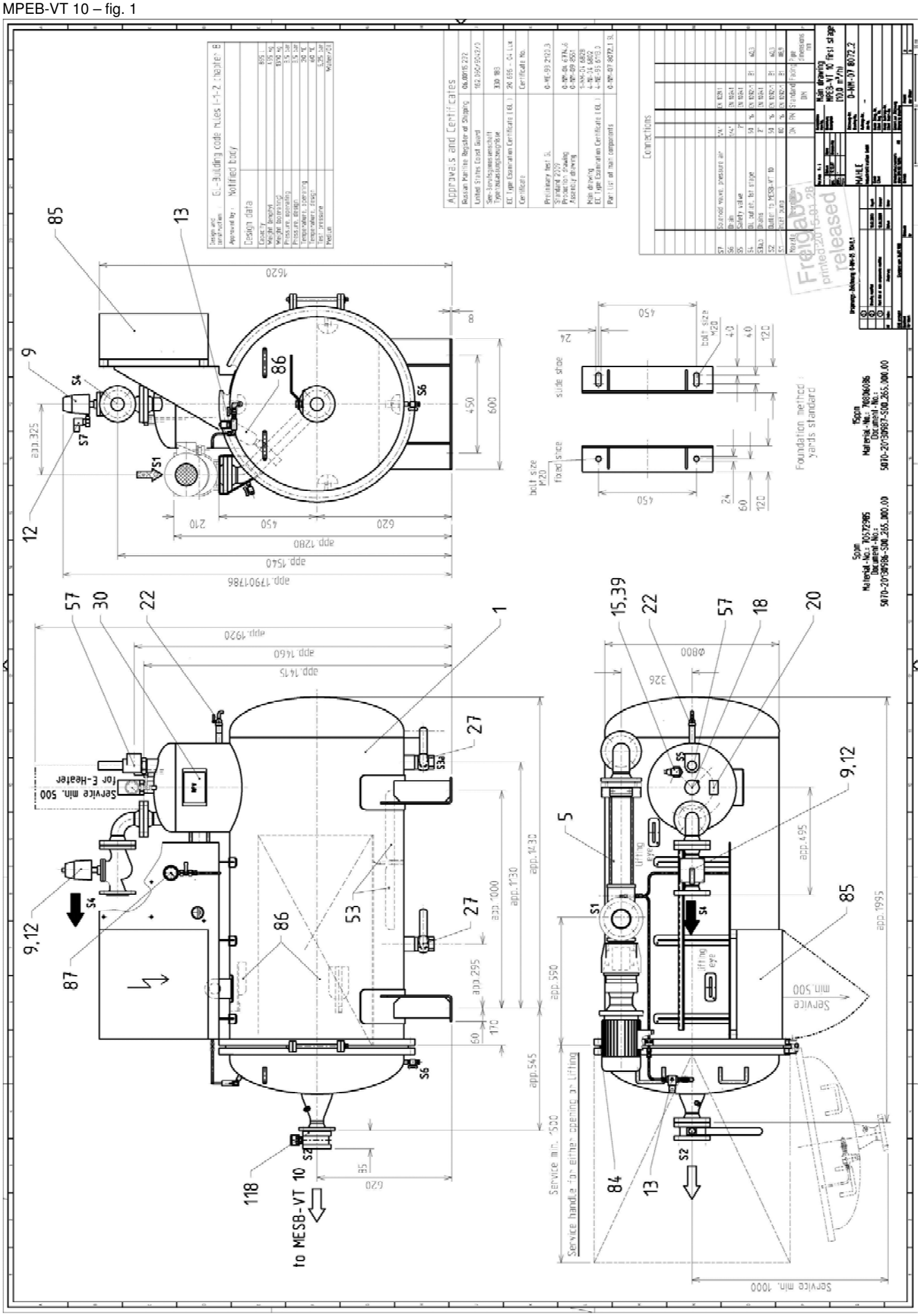

MPEB-VT 10 – fig. 2

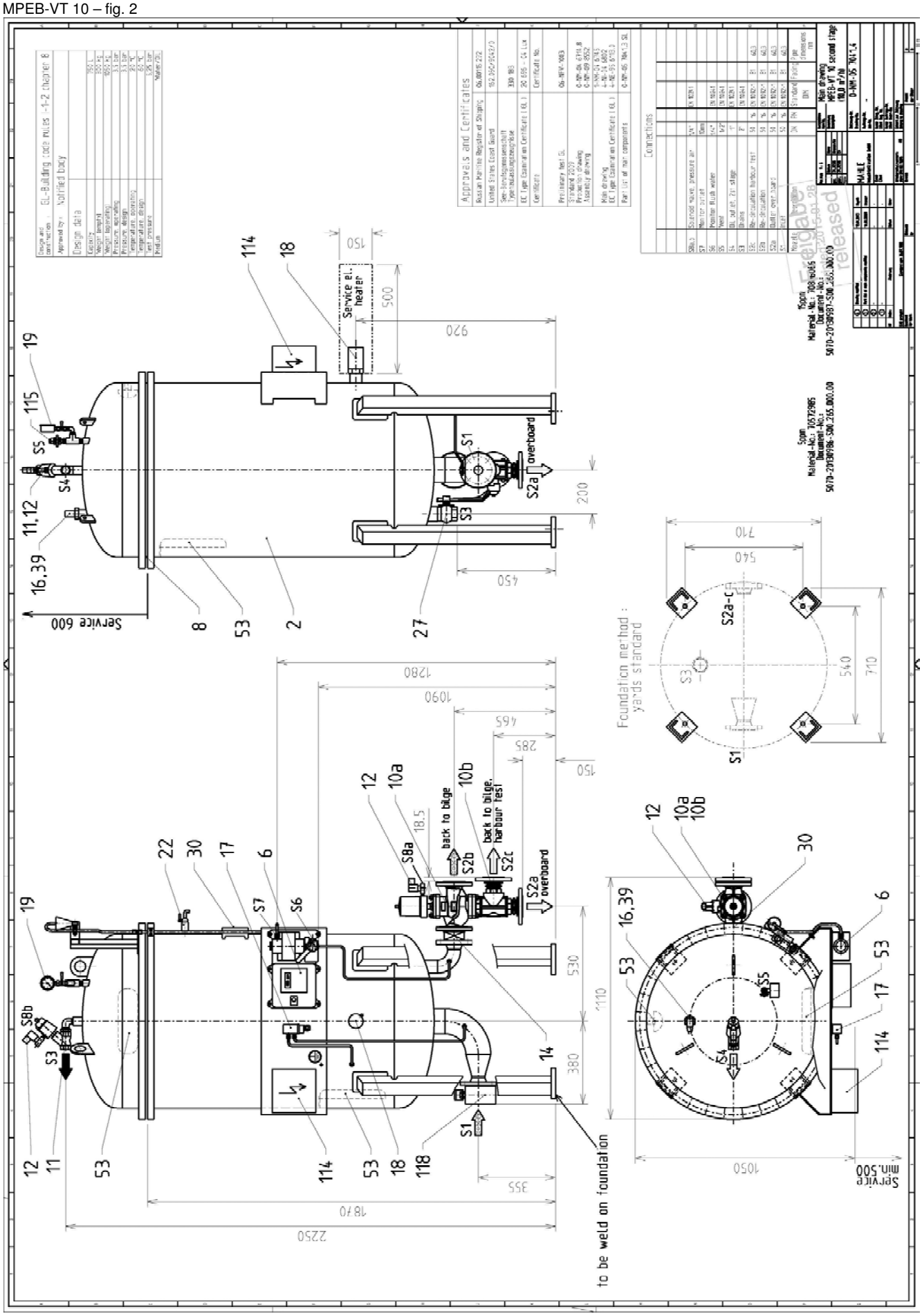

Driven by performance

MAHLE Industriefiltration GmbH
Tarpenring 31-33
D-22419 Hamburg
Phone +49 40 530040-0
Fax +49 40 530040-24191
separation@mahle.com
www.mahle.com
08/2015