A
Seminar report
On

CAD/CAM

Submitted in partial fulfillment of the requirement for the award of degree
Of Computer Science

SUBMITTED TO: **SUBMITTED BY:**

www.studymafia.org

www.studymafia.org

Preface

I have made this report file on the topic **CAD/CAM;** I have tried my best to elucidate all the relevant detail to the topic to be included in the report. While in the beginning I have tried to give a general view about this topic.

My efforts and wholehearted co-corporation of each and everyone has ended on a successful note. I express my sincere gratitude to ……..who assisting me throughout the preparation of this topic. I thank him for providing me the reinforcement, confidence and most importantly the track for the topic whenever I needed it.

Index

INTRODUCTION

It is said that first industry revolution was experienced in eighteenth century when attempts were made to substitute muscle power by mechanical energy. The world is now passing through second industrial revolution with the fantastic advance occurring continuously in the field of electronics and computer science and the computer substituting human brain in the control of machine and industrial process.

The manufacturing scene today is undergoing a revolution. The mass production of any product or component economically is possible. Due to high cost of material, any waste of material during manufacturing is intolerable. To meet these requirements, there is rapidly growing need for improved communication and feed back between the manufacturing and design process, integrating them into a single system capable of being optimized as a whole. The use of computer in manufacturing process is the answer to meet this requirement and objectives.

(CIM) computer integrated manufacturing is a recent technology being tried in advance computer and it comprises a combination of software and hardware for product design, product planning, product control, product equipment and product process.

In this CIM technology CAD/CAM play an effective role. CAD/CAM system is ideally suited for designing and manufacturing mechanical components of free from complex 2-dimensional and 3-dimensional shapes.

CAD/CAM technology plays an important role in functioning of robots. In CAD/CAM system the robot work data is prepared from CAD data from the first designing process. This system is a kind of off-line teaching system. Since an actual robot is not used to input data for path creation, the coordinate system data must be corrected and simulations necessary before loading a created data.

Robots are inevitable for application in the field where the work is extremely difficult or impossible for human being to perform.

Some of such examples are: Work requiring speed, precision or function exceeding human ability, or that which requires entering a sterile environment, vacuum, outer space, or around a nuclear reactor, places that a man cannot enter easily or at all.

WHAT IS CAD/CAM?

Computer-aided design (CAD), Computer aided manufacturing (CAM) can be defined as the use of digital computer to assist the designer in the:

* Creation
* Development
* Modification
* Analysis
* Optimization of a design and manufacturing activity.

Why CAD/CAM?

Computer Aided Design and Computer Aided Manufacture is the way things are made these days. Without this technology we wouldn't have the range and quality of products available or, at least, they wouldn't be available at a price most of us can afford.

Hand-building and manual techniques still very much have their place and Design Education needs to treasure and foster these skills so that future generations will have the 'hands-on' skills to understand the man-made world and provide the next generation of engineers, designers and technicians.

All of these professionals will be using CAD/CAM techniques or CAD/CAM products in their work, alongside practical hands-on skill. Design and Technology education has to reflect modern practice so it is crucial that students have the opportunity to use real CAD/CAM tools in their designing and Making.

Uses

Computer-aided design is one of the many tools used by engineers and designers and is used in many ways depending on the profession of the user and the type of software in question.

CAD is one part of the whole Digital Product Development (DPD) activity within the Product Lifecycle Management (PLM) processes, and as such is used together with other tools, which are either integrated modules or stand-alone products, such as:

- Computer-aided engineering (CAE) and Finite element analysis (FEA)
- Computer-aided manufacturing (CAM) including instructions to Computer Numerical Control (CNC) machines
- Photo realistic rendering
- Document management and revision control using Product Data Management (PDM).

CAD is also used for the accurate creation of photo simulations that are often required in the preparation of Environmental Impact Reports, in which computer-aided designs of intended buildings are superimposed into photographs of existing environments to represent what that locale will be like were the proposed facilities allowed to be built. Potential blockage of view corridors and shadow studies are also frequently analyzed through the use of CAD.

CAD has been proven to be useful to engineers as well. Using four properties which are history, features, parameterization, and high level constraints. The construction history can be used to look back into the model's personal features and work on the single area rather than the whole model. Parameters and constraints can be used to determine the size, shape, and other properties of the different modeling elements.

The features in the CAD system can be used for the variety of tools for measurement such as tensile strength, yield strength, electrical or electro-magnetic properties. Also its stress, strain, timing or how the element gets affected in certain temperatures, etc.

Types

There are several different types of CAD each requiring the operator to think differently about how to use them and design their virtual components in a different manner for each.

There are many producers of the lower-end 2D systems, including a number of free and open source programs. These provide an approach to the drawing process without all the fuss over scale and placement on the drawing sheet that accompanied hand drafting, since these can be adjusted as required during the creation of the final draft.

3D wireframe is basically an extension of 2D drafting (not often used today). Each line has to be manually inserted into the drawing. The final product has no mass properties associated with it and cannot have features directly added to it, such as holes. The operator approaches these in a similar fashion to the 2D systems, although many 3D systems allow using the wireframe model to make the final engineering drawing views.

3D "dumb" solids are created in a way analogous to manipulations of real world objects (not often used today). Basic three-dimensional geometric forms (prisms, cylinders, spheres, and so on) have solid volumes added or subtracted from them, as if assembling or cutting real-world objects. Two-dimensional projected views can easily be generated from the models. Basic 3D solids don't usually include tools to easily allow motion of components, set limits to their motion, or identify interference between components.

Solid modeling there are two types of solid modeling

1). *3D parametric solid modeling* allows the operator to use what is referred to as "design intent". The objects and features created are modifiable. Any future modifications will made by changing how the original part was created. If a feature was intended to be located from the center of the part, the operator should locate it from the center of the model. The feature could be located using any geometric object already available in the part, but this random placement would defeat the design intent. If the operator designs the part as it functions the parametric modeler is able to make changes to the part while maintaining designed in relationships.

2). *Explicit Modellers or Direct 3D CAD Modelers* provide the ability to edit geometry without a history tree. With direct modeling once a sketch is used to create geometry the sketch is incorporated into the new geometry and the designer just modifies the geometry without needing the original sketch. As with Parametric modeling, Direct modeling has the ability to include relationships between selected geometry (e.g., tangency, concentricity).

Top end systems offer the capabilities to incorporate more organic, aesthetics and ergonomic features into designs. Freeform surface modeling is often combined with solids to allow the designer to create products that fit the human form and visual requirements as well as they interface with the machine.

INTERACTIVE COMPUTER GRAPHICS (ICG)

ICG is an important part of CAD system. It is a user oriented system using computer to create, transform and display data in the form of pictures or symbols. The designer can create an image on CRT screen by entering commands by using a combination of elementary geometric symbols of elements stored in the computer memory.

The image can be modified, enlarged/reduced in size, moved to another location on the screen, rotate and transformation carried out –alphanumerical information is printed on the sketch as desired.

The ICG system comprises of a control processing unit, graphic display terminal, printer, plotter, and drafting equipment plus the computer programs to implement graphic processing and any other specialized application programs to accomplish the particular desired engineering functions.

POTENTIAL APPLICATION AREAS OF CAD/CAM

Design and Design Analysis: CAD system would be best suited for drawing offices where frequent modification are required on drawing and several parts repeat. It must be remembered that it very easy with computer to make modifications and very fast to draw part profile once it details are feed in computer.

Once a drawing is entered in the CAD system, later modification can be done quickly, and detailed drawing can be prepared quickly from a general arrangement drawing, NC tapes can produced. Storing of the drawing is very convenient, easy, occupies very less space and symbols for electrical, hydraulic, control and instrumentation circuits can be called up quickly and positioned on the schematic drawing.

Standard components can be stored permanently in the data base and called up and positioned on the drawing, resulting in saving of time and enforcement of standard. It is possible to associate non graphical information like part number, supplier, material etc. for any component/assembly.

It is very convenient to calculate properties like weight, center of gravity, moment of inertia, etc. and 3-D model can be easily produced. It is also possible to carry out finite element analysis by producing meshes for analysis.

***Manufacture**:* With CAD/CAM system the complete NC part programming process can be carried out interactively, including post processing and production of NC tapes. Source programs in languages such as APT can be produced. System can verify tapes by producing tool center path plots. Some system can show metal being removed dynamically.

It is possible to store libraries of standard tools and tool holder, thus carrying out process planning.

By calling up and manipulating standard fixturing components, like studs, stops, clamps, bushes, location devices, fixtures etc., it is possible to design a fixture for a component already designed on the CAD/CAM system.

Exploded views, schematics and diagram, 3-D colors shaded like photographic views of the part can be produced. Tenders and estimates can be quickly produced to high quality.

THESE ARE FEW DESIGN MODEL OF CAD/CAM

1. VIEW OF ENGINE

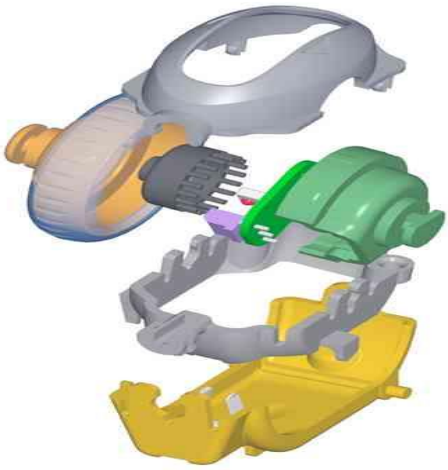

2. VIEW OF BRACKET

3. CONNECTING ROD

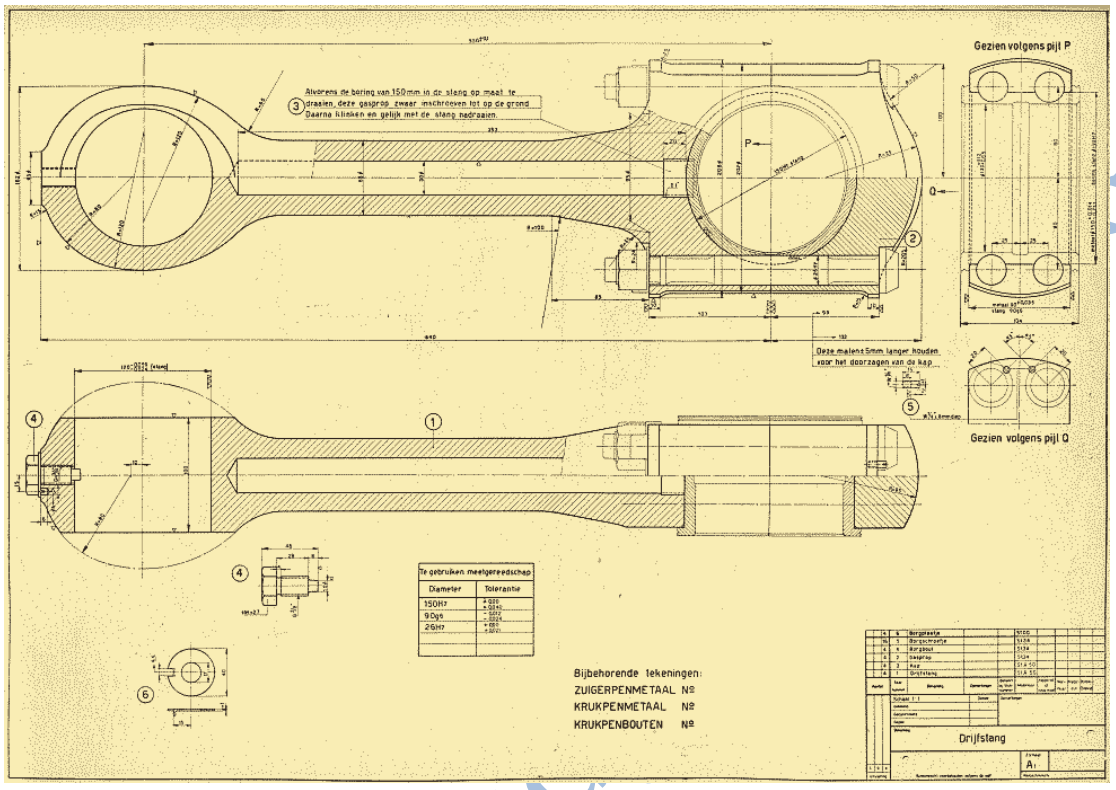

4. ISOMETRIC VIEW OF HOUSE

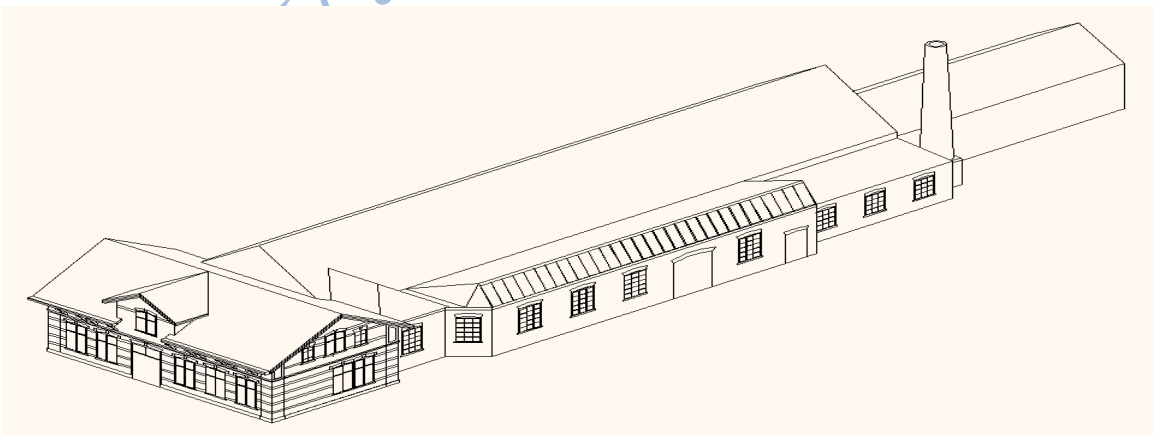

5. EXPLODED VIEW OF ENGINE

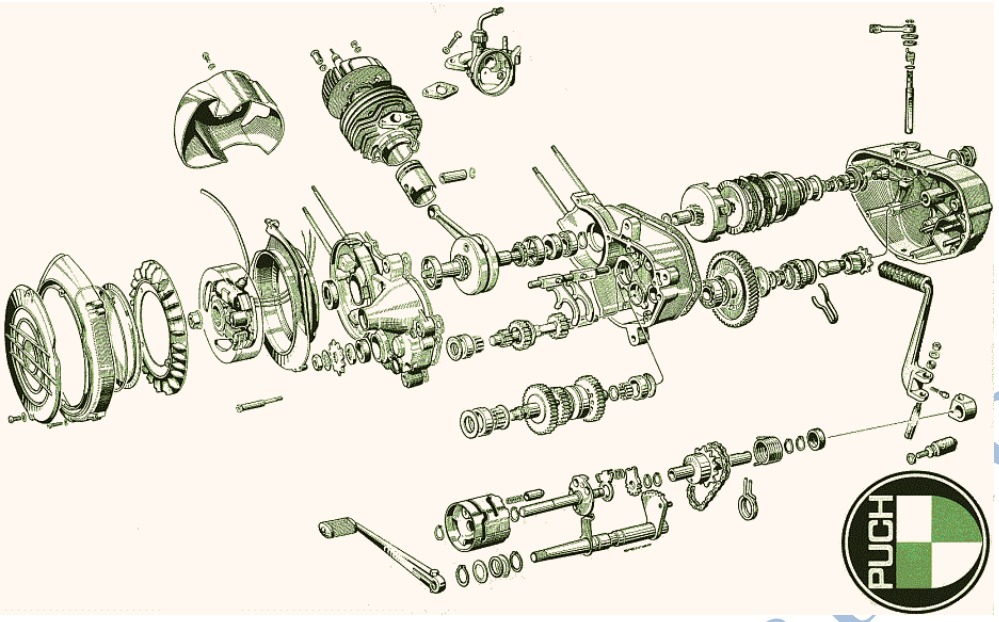

6. EXPLODED VIEW OF MOULD BOX

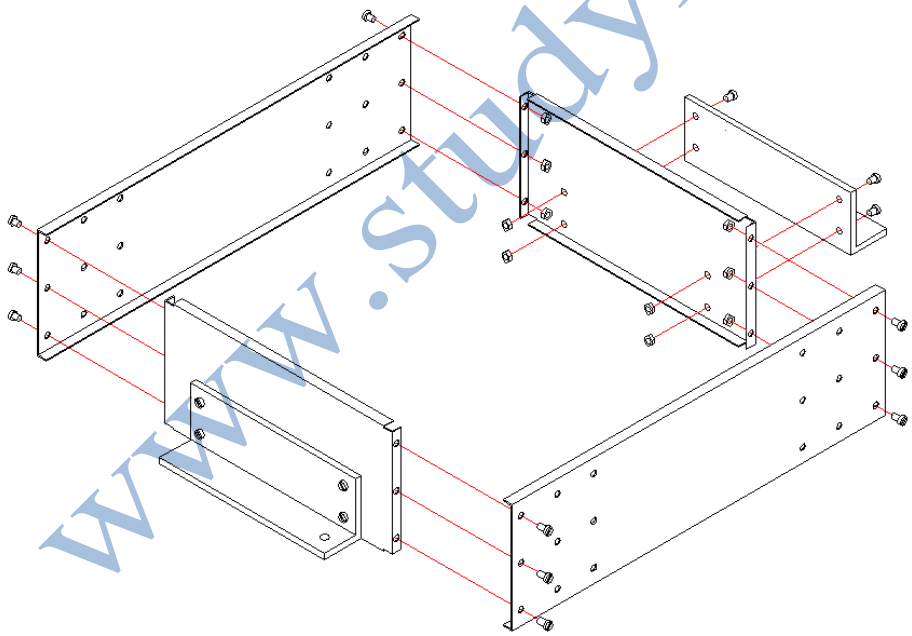

7. ISOMETRIC VIEW OF HOUSE

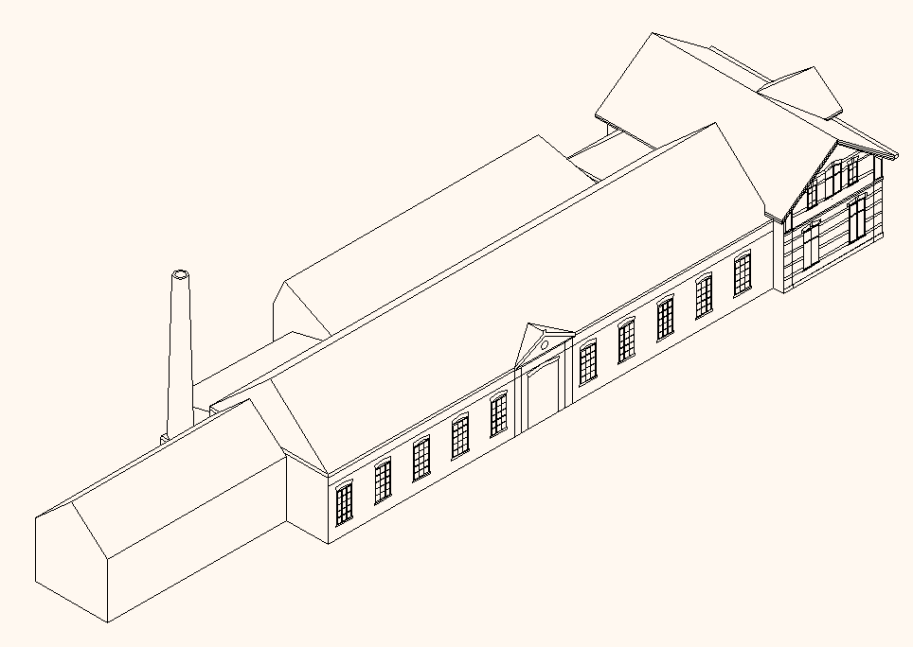

BENEFITS OF CAD/CAM

* Introduction of computer has resulted in a better and consistent quality product at reduced costs

* CAD has enable creation of assemblies and parts in the computer, there analysis, optimization, stimulating the functionality, aesthetic requirements etc.

* It has resulted lead time in the design office.

* Easy referencing and material of earlier design, data and information.

* Time for changing design and updating document is reduced considerably

* Designer is relived from routine work and is allowed more time for creative tasks.

* Dependence on design subcontractors is reduced.

* Design personal can be used effectively for long term tasks like creating standard database, preparing parametric designs etc.

* The data created at design stage can be used in manufacturing database and other planning and machine control functions.

* NC programming time is reduced.

* NC programs can be developed precisely and conveniently due to onscreen simulation of tool paths.

* CAD techniques provide the design engineer a new powerful tool depending on degree of integration with other activities like design verification, finite element analysis, machines, mould flow analysis, solid and surface modelers, documentation, computer aided process planning, shop floor data collection, production control etc.

* CAD/CAM has resulted improved productivity in design engineering and manufacturing, and productivity gain results in reduction of cost and cycle time, improvement in quality.

*Computer aided inspection utilizes the design database to arrive at the qualitative analysis of the product.

Limitations of CAD- CAM

There are two primary limitations to CAD CAM restorations. (Like Cerec and E4D)It is not yet possible to do multiple unit bridges and the esthetics is limited. The esthetics has improved dramatically from the early days as the quality of materials has improved. Multi shade material blocks can duplicate dentin and enamel shades. Never the less, CAD CAM is not suited for highly esthetic situations.

It is possible to create a CAD CAM veneer, cut it back and add baked porcelain to create a superior esthetic result. However this requires a skilled technician working in a traditional porcelain studio with lots of time.

The primary limitation for most dentists is the cost. A single system is well over $100,000. That is a huge investment for the typical dentist. However it is possible to justify the investment based on lab savings and time saved with no second appointment. For dentists who are already doing a lot of indirect posterior onlays and crowns it is a natural fit. But it could be a stretch for offices that still do a lot of amalgams.

Conclusions

Although the last seven years nothing revolutionary happened in the CAD tools ,the software's vendors support that in the short run many things will change the way of the mechanical design.
The CAD in the future will be more easy to use and learn, and geared to enhance concept design and construction planning, will be functional and powerful enough to satisfy the needs of engineering design and integration of all disciplines, and corporate functions, sectors and levels. It will be more than 2D drawings and more than 3D models, it has to handle Object and Symbolic Data with same ease.

It will be a 4D (3D +time) modelling tool for better planning and scheduling. It will allow designers to exploit the best advantages of each CAD Technology 2D -> 3D -> 4D, to progressively refine the design until fully satisfying the customers' needs. It will be efficient to store, locate, visualize, and re-use data for integration of proven designs, and standard parts and equipment.

It will enhance simultaneous (collaborative and concurrent) and distributed engineering eliminating all barriers that constrain communications. It will share one "data factory" that creates data needed by all disciplines.

References

www.studymfia.org
www.google.com
www.wikipedia.com