Structural Computations For:

CANTILEVERED SIGN BRIDGE
OVER IH 90 WB

STATE PROJECT NO: 1071-06-78

PROJECT DESCRIPTION: CANILEVERED SIGN BRIDGE

STRUCTURE ID: S-32-0058

Calculations Prepared By:

K. Singh and Associates, Inc.
3636 N. 124th St.
Wauwatosa, WI 53222
(262) 821-1171

WisDOT 4-Chord Galvanized Steel Cantilever Sign Truss

S-32-0058

WisDOT Construction Project ID: 1071-06-78
Galvanized Steel Cantilever Sign Truss
IH 90 WB, City of La Crosse, Wisconsin

Table of Contents:

1.0 Loads & Load Combinations

- 1.1 Select Member Size
- 1.2 Dead Load
- 1.3 Ice Load
- 1.4 Wind Load
- 1.5 Summary of Applied Strength Loads

2.0 Summary of RISA-3D Strength Load Output

3.0 Design of Members Based on Strength

- 3.1 Chord Analysis
- 3.2 Tower Analysis
- 3.3 Boxed End Analysis
- 3.4 Transverse Web Analysis
- 3.5 Front and Rear Web Analysis
- 3.6 Top and Bottom Web Analysis
- 3.7 Tower Web Analysis

4.0 Connection Design Based on Strength

- 4.1 Chord Coupling Plate Design
- 4.2 Weld at Base of Upright
- 4.3 Anchor Bolts at Base Plate
- 4.4 Base Plate Check

5.0 Fatigue Analysis

- 5.1 Galloping
- 5.2 Vortex Shedding
- 5.3 Natural Wind Gusts
- 5.4 Truck-Induced Gusts
- 5.5 Summary of Applied Fatigue Loads
- 5.6 Summary of RISA-3D Fatigue Load Output
- 5.7 Stress Range Calculations
  - 5.7.1 Anchor Bolts
  - 5.7.2 Tower-to-Baseplate Connection Weld
  - 5.7.3 Stiffener-to-Baseplate Connection
  - 5.7.4 Termination of Stiffener
  - 5.7.5 Tower Handhole
  - 5.7.6 Chord-to-Coupling Plate Weld and Gusset Plate-to-Chord Weld
  - 5.7.7 Chord Coupling Plate Bolt Connection
  - 5.7.8 Angle-to-Gusset Connection Weld

6.0 Summary of Analysis Results

DESIGN

$mil \equiv 0.001in$ $\quad kip \equiv 1000 \cdot lb$ $\quad ORIGIN \equiv 1$

$plf \equiv \frac{lb}{ft}$ $\quad ksi \equiv \frac{kip}{in^2}$ $\quad psf \equiv \frac{lb}{ft^2}$

References

- AASHTO Standard Specifications for Structural Supports for Highway Signs, Luminaires, and Traffic Signals, Fifth Edition, 2009 (Sign)
- AASHTO Standard Specifications for Highway Bridges, 17th Edition, 2002 (AASHTO Standard Bridges)
- WisDOT Bridge Manual Standard Details, July 2012 (WisDOT Standard Details)
- AISC Specification for Structural Steel Buildings, February 2010 (AISC 360-10)
- AISC Steel Construction Manual, 14th Edition, 2010 (AISC 14th)
- NCHRP Report 412: Fatigue-Resistant Design of Cantilevered Signal, Sign and Light Supports (NCHRP 412)
- NCHRP Report 469: Fatigue-Resistant Design of Cantilevered Signal, Sign, and Light Supports (NCHRP 469)

1.0 Loads & Load Combinations

Group Loads		% of Allowable Stress
I	Dead	100
II	Dead + Wind	133
III	Dead + Ice + 0.5(Wind*)	133
IV	Fatigue	**

* Minimum value of 25 psf for Group III.
** See Section 11 of AASHTO Sign Specifications for fatigue loads and stress range limits.

1.1 Select Member Size

Type in member selection exactly as it is found in the "**AISC_Manual_Label**" column of the AISC Shapes Database, Version 14.

Chord := "HSS4.500X0.375"

Tower := "HSS20X0.500"

Boxed_End := "L3X3X1/4"

Trans_Web := "L2-1/2X2-1/2X1/4"

Top_Bottom_Web := "L3X3X1/4"

Front_Rear_Web := "L3X3X1/4"

Tower_Web := "L4X4X1/2" (Not Applicable to a Single-Column Cantilever Sign Truss)

1.1.1 Properties of Selected Member Shapes

1.1.1.1 Chord Members

Chord = "HSS4.500X0.375"

$A_{ch} = 4.55 \cdot in^2$ $D_{ch} = 4.5 \cdot in$ (OD) $t_{ch} = 0.349 \cdot in$ (t design)

$I_{ch} = 9.87 \cdot in^4$ $S_{ch} = 4.39 \cdot in^3$ $t_{nom\_ch} = 0.375 \cdot in$ (t nominal)

$r_{ch} = 1.47 \cdot in$ (Radius of gyration) $J_{ch} = 19.7 \cdot in^4$

1.1.1.2 Tower Members

Tower = "HSS20X0.500"

$A_{to} = 28.5 \cdot in^2$ $D_{to} = 20 \cdot in$ (OD) $t_{to} = 0.465 \cdot in$ (t design)

$I_{to} = 1.36 \times 10^3 \cdot in^4$ $S_{to} = 136 \cdot in^3$ $t_{nom\_to} = 0.5 \cdot in$ (t nominal)

$r_{to} = 6.91 \cdot in$ (Radius of gyration) $J_{to} = 2.72 \times 10^3 \cdot in^4$

1.1.1.3 Boxed End Members

Boxed_End = "L3X3X1/4"

$A_{be} = 1.44 \cdot in^2$ $t_{be} = 0.25 \cdot in$ $b_{be} = 3 \cdot in$ (Longer leg length)

$I_{be} = 1.23 \cdot in^4$ $S_{be} = 0.569 \cdot in^3$ $d_{be} = 3 \cdot in$ (Shorter leg length)

$r_{be} = 0.926 \cdot in$ $J_{be} = 0.031 \cdot in^4$

1.1.1.4 Transverse Web Members

Trans_Web = "L2-1/2X2-1/2X1/4"

$A_{tr} = 1.19 \cdot in^2$ $t_{tr} = 0.25 \cdot in$ $b_{tr} = 2.5 \cdot in$ (Longer leg length)

$I_{tr} = 0.692 \cdot in^4$ $S_{tr} = 0.387 \cdot in^3$ $d_{tr} = 2.5 \cdot in$ (Shorter leg length)

$r_{tr} = 0.764 \cdot in$ $J_{tr} = 0.026 \cdot in^4$

1.1.1.5 Top and Bottom Web Members

Top_Bottom_Web = "L3X3X1/4"

$A_{tb} = 1.44 \cdot in^2$ $t_{tb} = 0.25 \cdot in$ $b_{tb} = 3 \cdot in$ (Longer leg length)

$I_{tb} = 1.23 \cdot in^4$ $S_{tb} = 0.569 \cdot in^3$ $d_{tb} = 3 \cdot in$ (Shorter leg length)

$r_{tb} = 0.926 \cdot in$ $J_{tb} = 0.031 \cdot in^4$

1.1.1.6 Front and Rear Web Members

Front_Rear_Web = "L3X3X1/4"

$A_{fr} = 1.44 \cdot in^2$ $t_{fr} = 0.25 \cdot in$ $b_{fr} = 3 \cdot in$ (Longer leg length)

$I_{fr} = 1.23 \cdot in^4$ $S_{fr} = 0.569 \cdot in^3$ $d_{fr} = 3 \cdot in$ (Shorter leg length)

$r_{fr} = 0.926 \cdot in$ $J_{fr} = 0.031 \cdot in^4$

1.1.1.7 Tower Web Members Tower_Web = "L4X4X1/2"

$A_{tw} = 3.75 \cdot in^2$ $t_{tw} = 0.5 \cdot in$ $b_{tw} = 4 \cdot in$ (Longer leg length)

$I_{tw} = 5.52 \cdot in^4$ $S_{tw} = 1.96 \cdot in^3$ $d_{tw} = 4 \cdot in$ (Shorter leg length)

$r_{tw} = 1.21 \cdot in$ $J_{tw} = 0.322 \cdot in^4$

1.1.2 Define Material Properties

$F_{y\_HSS} := 42ksi$ (WisDOT Standard Details 39.02 & 10, for round HSS members (chord, tower))

$F_{y\_angle} := 36ksi$ (WisDOT Standard Details 39.02 & 10, for single angles)

$F_{y\_plate} := 36ksi$ (WisDOT Standard Details 39.02 & 10, for plates)

$F_u := 58ksi$ (AISC 14th, for the HSS, angles, and plates)

$E := 29000ksi$

1.2 Dead Load

1.2.1 Self Weight

Included In Computer Model

1.2.2 Truss Information

Depth of Truss: $d_{truss} := 5ft$ (vertical dimension of truss)

Width of Truss: $b_{truss} := 3.75ft$ (width of truss cross-section)

$L_{web\_section} := d_{truss}$ $L_{web\_section} = 5\,ft$

(Length of each design web section for the purpose of calculating equivalent forces on chord nodes in RISA-3D model. For WisDOT 4-chord galvanized steel sign structures, this length equals the spacing of nodes along the chords.)
(In RISA-3D model, use d_{truss} for spacing of nodes in the first panels next to tower columns so that the axial force applied to web members will be maximized.)

Length of Angles:

$L_{be} := d_{truss} = 5\,ft$ (length of vertical boxed-end member)

$L_{be\_hororiz} := b_{truss} = 3.75\,ft$ (length of horizontal boxed-end member)

$L_{tr} := \sqrt{\left(b_{truss}^2 + d_{truss}^2\right)} = 6.25\,ft$ $L_{tb} := \sqrt{\left(L_{web\_section}^2 + b_{truss}^2\right)} = 6.25\,ft$

$L_{fr} := \sqrt{\left(L_{web\_section}^2 + d_{truss}^2\right)} = 7.071\,ft$ $L_{tw} := \sqrt{2} \cdot d_{truss} = 7.071\,ft$

1.2.3 Sign

$L_{structure} := 31ft$ (Span length of sign structure)

$L_{sum\_signs} := 15ft$ (Total maximum design sign length)

$L_{sum\_signs} = 15\,ft$

$D_{sign} := \frac{268ft^2}{L_{sum\_signs}} = 17.867\,ft$ (Maximum Design Sign Height)

$w_{sign} := 3\frac{lb}{ft^2}$ (Weight of Sign, per square foot)

(2.45 psf minimum per Plate No. A5-2.9 "Aluminum Extrusions for Type I Signs" of the Wisconsin Sign Plate Manual.)

Per WisDOT Standard Detail 39.09:

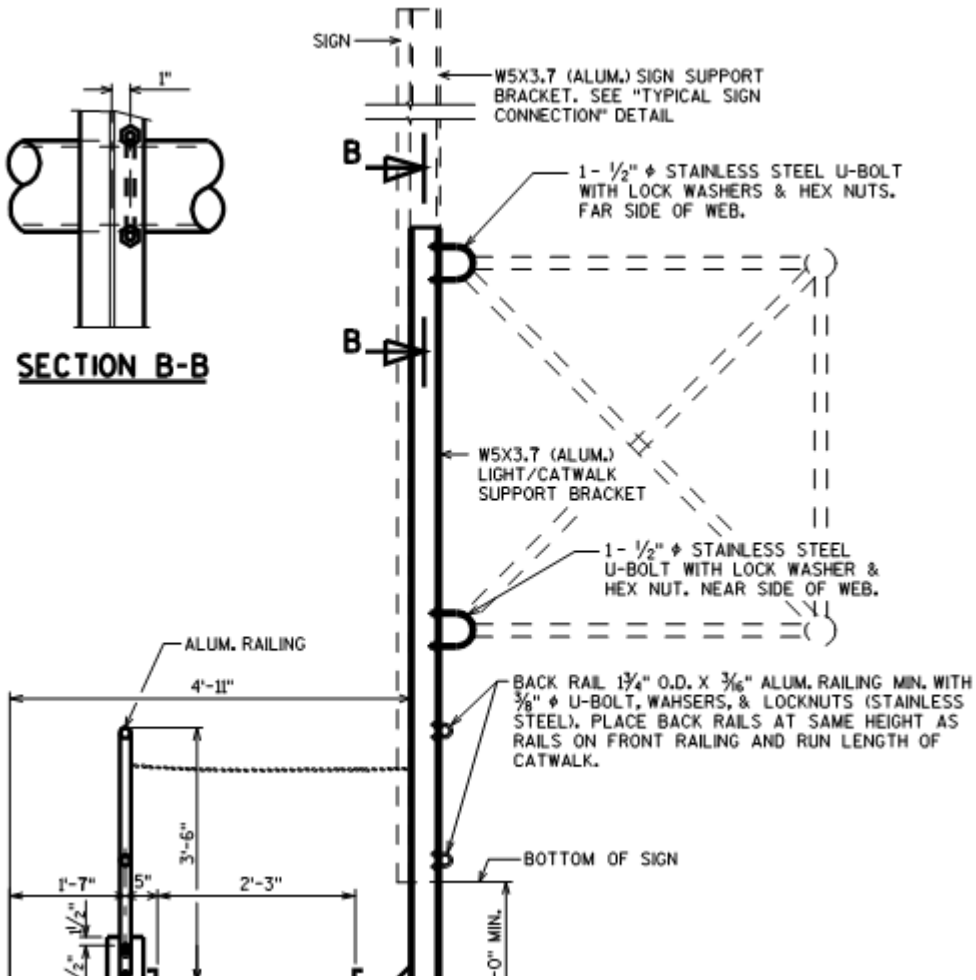

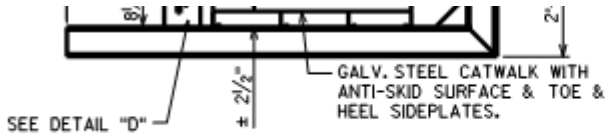

SECTION THRU WALKWAY

SHIM AS REQ'D.

Derivation of Equivalent Dead and Ice Loads:

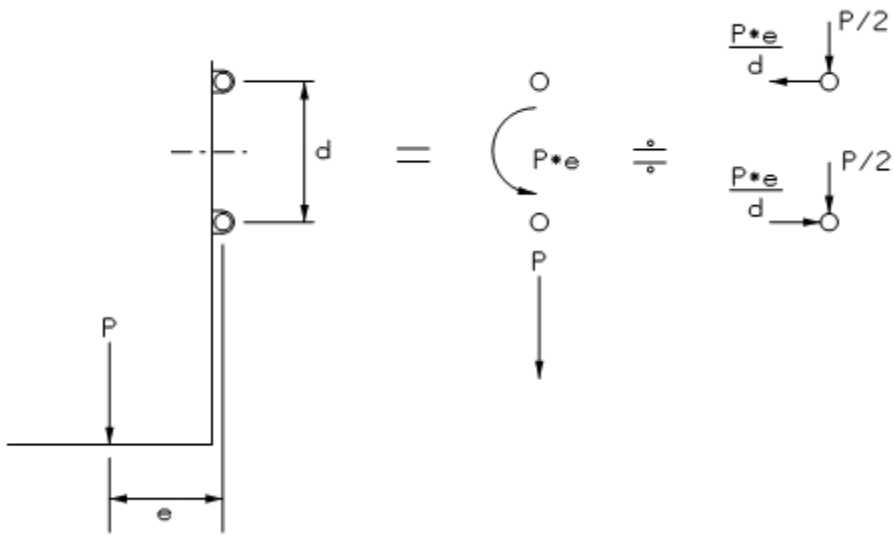

$V\_DL_{sign} := w_{sign} \cdot D_{sign} \cdot L_{web\_section}$ (Total design sign weight per design section of truss)

$V\_DL_{sign} = 268\,lb$

$V\_DL_{sign\_node} := \frac{V\_DL_{sign}}{2}$ (Vertical force applied to each node, evenly distributed between top and bottom chord node locations)

$V\_DL_{sign\_node} = 134\,lb$

$e_{sign} := 2in + 5in + \frac{D_{ch}}{2}$ (Eccentricity of sign load from C/L of chord)

(Thickness of sign panel + Depth of sign support bracket + Radius of chord)

$e_{sign} = 9.25 \cdot in$

$H\_DL_{sign\_node} := \frac{V\_DL_{sign} \cdot e_{sign}}{d_{truss}}$

$H\_DL_{sign\_node} = 41.317\,lb$ (Horizontal force on chord node due to eccentricity)

1.2.4 Sign Support Bracket and Catwalk Support Vertical Bracket

$d_{catwalk\_to\_CL\_truss} := 2ft + \frac{12ft}{2}$ (Distance from catwalk to C/L of truss)

(Bottom of catwalk to bottom of a future 12-ft deep sign
+ Bottom of the 12-ft sign to the centerline of truss)

$d_{catwalk\_to\_CL\_truss} = 8\,ft$

$$L_{v\_support} := D_{sign} + \left[d_{catwalk\_to\_CL\_truss} + \left(\frac{d_{truss}}{2} + 0.5ft\right)\right]$$

(Length of support for design sign depth + Length of catwalk vertical support)

(The maximum spacing of vertical sign supports is 9'-0" per Plate No. A4-7.3 "Type I Sign Connection to Overhead Sign Support" of the Wisconsin Sign Plate Manual.
The maximum spacing of catwalk support brackets is 8'-0" per WisDOT Standard Details 39.09.
For analysis purpose, the spacing of vertical support brackets is taken to be the same as the length of design web section.)

$L_{v\_support} = 28.867\,ft$

$w_{support} := 3.7\frac{lb}{ft}$ (Weight of W5x3.7 aluminum wide flange section per linear foot)

$V\_DL_{v\_support} := w_{support} \cdot L_{v\_support}$

$V\_DL_{v\_support} = 106.807\,lb$

$$V\_DL_{v\_support\_node} := \frac{V\_DL_{v\_support}}{2}$$

$V\_DL_{v\_support\_node} = 53.403\,lb$

(Vertical force applied at each chord node (top and bottom) where the sign support and catwalk support will be located. It is assumed that the force is distributed evenly between the top and bottom chords.)

$e_{v\_support} := \frac{5in}{2} + \frac{D_{ch}}{2}$ (Eccentricity of vertical support from C/L of chord)

$e_{v\_support} = 4.75 \cdot in$

$$H\_DL_{v\_support\_node} := \frac{V\_DL_{v\_support} \cdot e_{v\_support}}{d_{truss}}$$

$H\_DL_{v\_support\_node} = 8.456\,lb$ (Horizontal force on chord node due to eccentricity)

1.2.5 Catwalk and Sign Lights *(per design section)*

Galvanized Steel Catwalk (WisDOT Standard Details 39.09)

$DL_{catwalk} := 0\,\frac{lb}{ft}$ along the length of sign truss

Toe and Heel Side Plates

(2) - 1/4 " x 6" plates --> $2\cdot\left(\frac{1}{4}in\right)\cdot(6in)\cdot 490\,\frac{lb}{ft^3} = 10.208\,\frac{lb}{ft}$ (approximately 10 lb/ft)

$DL_{sideplates} := 0\,\frac{lb}{ft}$ along the length of sign truss

Front and Back Aluminum Rails, 1.75" O.D. x 3/16 " thick

Cross-sectional area of a rail: $\frac{\pi}{4}\cdot\left[(1.75in)^2 - \left(1.75in - 2\cdot\frac{3}{16}in\right)^2\right] = 0.92\cdot in^2$

Weight of a rail: $173\,\frac{lb}{ft^3}\cdot 0.92in^2 = 1.105\,\frac{lb}{ft}$ (approximately 1.2 lb per linear foot)

$DL_{h\_rails} := 0\cdot\left(\frac{lb}{ft}\right)$ two front and two back horizontal rails, along the length of sign truss

$DL_{v\_rails} := \left(0\,\frac{lb}{ft}\right)$ two vertical rails at each catwalk support bracket

Light Fixture

$DL_{light} := 0lb$ (assumed weight, one light per lane width of 12 feet)

Catwalk Support Horizontal Bracket

$DL_{h\_catwalk\_support} := 0$

$DL_{h\_catwalk\_support} = 0$ each catwalk horizontal support bracket

(Catwalk support vertical bracket was accounted for in the previous section along with sign support vertical brackets.)

Catwalk and related items per web section

$DL_{catwalk1} := L_{web\_section}\cdot\left(DL_{catwalk} + DL_{sideplates}\right)$ $DL_{catwalk1} = 0$

$DL_{catwalk2} := L_{web\_section}\cdot DL_{h\_rails} + DL_{v\_rails}$ $DL_{catwalk2} = 0$

$DL_{catwalk3} := DL_{light}\cdot\frac{L_{web\_section}}{12ft}$ $DL_{catwalk3} = 0$

$DL_{catwalk4} := DL_{h\_catwalk\_support}$ $DL_{catwalk4} = 0$

$V\_DL_{catwalk} := DL_{catwalk1} + DL_{catwalk2} + DL_{catwalk3} + DL_{catwalk4}$

$V\_DL_{catwalk} = 0$

$$e_{catwalk} := \left[\frac{(2ft + 3in)}{2} + 8in\right] + 5in + \frac{D_{ch}}{2}$$

$e_{catwalk} = 28.75 \cdot in$

(C/L of catwalk to vertical support + Depth of vertical support + Radius of chord)

Vertical catwalk loading to apply to each chord node:

$$V\_DL_{catwalk\_node} := \frac{V\_DL_{catwalk}}{2}$$

$V\_DL_{catwalk\_node} = 0$

$$H\_DL_{catwalk\_node} := \frac{V\_DL_{catwalk} \cdot e_{catwalk}}{d_{truss}}$$

$H\_DL_{catwalk\_node} = 0$

1.2.6 Sum of Dead Load of Sign, Vertical Supports, and Catwalk

Vertical point loads applied at top and bottom chord nodes, where design sign is located:

$V\_DL_{sign\_node} = 134\,lb$ $\quad V\_DL_{v\_support\_node} = 53.403\,lb$

$$V\_DL_{node} := V\_DL_{sign\_node} + V\_DL_{v\_support\_node}$$

$V\_DL_{node} = 187.403 \cdot lb$

Horizontal point loads applied at top and bottom chord nodes where design sign is located:

$H\_DL_{sign\_node} = 41.317\,lb$ $\quad H\_DL_{v\_support\_node} = 8.456\,lb$

$$H\_DL_{node} := H\_DL_{sign\_node} + H\_DL_{v\_support\_node}$$

$H\_DL_{node} = 49.772\,lb$ (to model the torsional effects of the dead load of sign, vertical supports, and catwalk on the truss)

1.3 Ice Load

Apply 3 psf ice load to exposed surfaces of components and to one side of each sign.

$w_{ice} := 3psf$

1.3.1 Truss Members

Load will be applied as a distributed load on members in RISA-3D.

If necessary, revise the perimeter formulas below depending on the shape of cross section of member.

.

Chords Members: $p_{ch} := \pi \cdot D_{ch}$ $\quad p_{ch} = 14.137 \cdot in$ $\quad V\_Ice_{ch} := p_{ch} \cdot w_{ice} = 3.534 \frac{lb}{ft}$

Tower Members: $p_{to} := \pi \cdot D_{to}$ $\quad p_{to} = 62.832 \cdot in$ $\quad V\_Ice_{to} := p_{to} \cdot w_{ice} = 15.708 \frac{lb}{ft}$

Boxed End Members: $p_{be} := 2 \cdot (b_{be} + d_{be})$ $\quad p_{be} = 12 \cdot in$ $\quad V\_Ice_{be} := p_{be} \cdot w_{ice} = 3 \frac{lb}{ft}$

Transverse Web Members: $p_{tr} := 2 \cdot (b_{tr} + d_{tr})$ $\quad p_{tr} = 10 \cdot in$ $\quad V\_Ice_{tr} := p_{tr} \cdot w_{ice} = 2.5 \frac{lb}{ft}$

Top and Bottom Web Members: $p_{tb} := 2 \cdot (b_{tb} + d_{tb})$ $\quad p_{tb} = 12 \cdot in$ $\quad V\_Ice_{tb} := p_{tb} \cdot w_{ice} = 3 \frac{lb}{ft}$

Front and Rear Web Members: $p_{fr} := 2 \cdot (b_{fr} + d_{fr})$ $\quad p_{fr} = 12 \cdot in$ $\quad V\_Ice_{fr} := p_{fr} \cdot w_{ice} = 3 \frac{lb}{ft}$

Tower Web Members: $p_{tw} := 2 \cdot (b_{tw} + d_{tw})$ $\quad p_{tw} = 16 \cdot in$ $\quad V\_Ice_{tw} := p_{tw} \cdot w_{ice} = 4 \frac{lb}{ft}$

1.3.2 Sign

Vertical:

$$V\_Ice_{sign} := w_{ice} \cdot D_{sign} \cdot L_{web\_section} = 268\,lb$$

(Vertical load due to the ice on the sign, per each design section of truss)

$$V\_Ice_{sign\_node} := \frac{V\_Ice_{sign}}{2}$$

(Vertical load to apply to each chord node where the sign is located.
Assumes the vertical load is distributed evenly between the top and bottom chord)

$$V\_Ice_{sign\_node} = 134\,lb$$

Horizontal (due to torsion):

$$H\_Ice_{sign\_node} := \frac{V\_Ice_{sign} \cdot e_{sign}}{d_{truss}}$$

(Horizontal force couple to apply to each chord node where the sign is located)

$$H\_Ice_{sign\_node} = 41.317\,lb$$

1.3.3 Sign Support and Catwalk Support Vertical Brackets

$d_{catwalk\_to\_CL\_truss} = 8\,ft$

$L_{v\_support} = 28.867\,ft$

(Combined length of sign support bracket and catwalk vertical support bracket per design section. It is assumed that there are one sign support bracket and one catwalk support bracket at each design web section.)

W5x3.7 Aluminum wide flange section

$b_{support} := 3in$ (Flange width of support bracket)

$p_{support} := 2(5in + b_{support})$ $p_{support} = 16 \cdot in$ (perimeter of support bracket)

$V\_Ice_{v\_support} := w_{ice} \cdot p_{support} \cdot L_{v\_support} = 115.467\ lb$ (per design section)

$$V\_Ice_{v\_support\_node} := \frac{V\_Ice_{v\_support}}{2}$$

(Vertical force applied at each chord node (top and bottom) where the sign supports will be located. Assumes the force is distributed evenly between the top and bottom chord.)

$V\_Ice_{v\_support\_node} = 57.733\ lb$

$e_{v\_support} = 4.75 \cdot in$ (Eccentricity of Vertical Supports from C/L of chord)

$$H\_Ice_{v\_support\_node} := \frac{V\_Ice_{v\_support} \cdot e_{v\_support}}{d_{truss}}$$

$H\_Ice_{v\_support\_node} = 9.141\ lb$

1.3.4 Catwalk

Galvanized Steel Catwalk

$Ice_{catwalk} := 0$

$Ice_{catwalk} = 0$ along the length of sign truss

Toe and Heel Side Plates

$d_{sideplate} := 6in$ (depth of catwalk side (toe & heel) plates)

$Ice_{sideplates} := 0$ (two sides of two side plates)

$Ice_{sideplates} = 0$ along the length of sign truss

Front and Back Aluminum Rails, 1.75" O.D. x 3/16 " thick

$Ice_{h\_rails} := 0$ (four horizontal rails)

$Ice_{h\_rails} = 0$ two front plus two back horizontal rails, along the length of sign truss

$Ice_{v\_rails} := 0$

$Ice_{v\_rails} = 0$ two vertical rails at each catwalk support bracket

Light Fixture

$Ice_{light} := 0$ assumes a 2 ft x 2 ft x 1 ft light fixture covered with ice all around

$Ice_{light} = 0$

Catwalk Support Horizontal Bracket

$Ice_{h\_catwalk\_support} := 0$

$Ice_{h\_catwalk\_support} = 0$ each catwalk horizontal support bracket

(Catwalk support vertical bracket is accounted for in the previous section along with sign support vertical brackets.)

Catwalk and Related Items per Web Section

$Ice_{catwalk1} := L_{web\_section} \cdot (Ice_{catwalk} + Ice_{sideplates})$

$Ice_{catwalk1} = 0$

$Ice_{catwalk2} := L_{web\_section} \cdot Ice_{h\_rails} + Ice_{v\_rails}$

$Ice_{catwalk2} = 0$

$Ice_{catwalk3} := Ice_{light} \cdot \frac{L_{web\_section}}{12ft}$

$Ice_{catwalk3} = 0$

$Ice_{catwalk4} := Ice_{h\_catwalk\_support}$

$Ice_{catwalk4} = 0$

(It is assumed that the spacing of catwalk support bracket is the same as length of design web section.)

$V\_Ice_{catwalk} := Ice_{catwalk1} + Ice_{catwalk2} + Ice_{catwalk3} + Ice_{catwalk4}$

$V\_Ice_{catwalk} = 0$

$e_{catwalk} = 28.75 \cdot in$

(C/L of catwalk to vertical support + Depth of vertical support + Radius of chord)

Vertical catwalk loading to apply to each chord node:

$V\_Ice_{catwalk\_node} := \frac{V\_Ice_{catwalk}}{2}$

$V\_Ice_{catwalk\_node} = 0$

Horizontal catwalk load: (force couple to be applied to the top and bottom chord nodes)

$H\_Ice_{catwalk\_node} := \frac{V\_Ice_{catwalk} \cdot e_{catwalk}}{d_{truss}}$

$H\_Ice_{catwalk\_node} = 0$

1.3.5 Summary of Ice Load on Sign, Vertical Supports, and Catwalk

$V\_Ice_{node} := V\_Ice_{sign\_node} + V\_Ice_{v\_support\_node}$

$V\_Ice_{node} = 191.733\,lb$

$H\_Ice_{node} := H\_Ice_{sign\_node} + H\_Ice_{v\_support\_node}$

$H\_Ice_{node} = 50.458\,lb$

1.4 Wind Load

- Wind loads on the truss members will be applied as distributed loads.
- Wind loads due to the sign will be applied as nodal forces on the chords, similar to the previous dead and ice loads.
- Since the sign will shield the truss members from wind loading, sections of members that are shielded by the sign will not receieve wind loads.

Basic Wind Pressure: $P_z := 0.00256 K_z \cdot G \cdot V^2 \cdot I_r \cdot C_d$ psf (Sign Eq. 3-1)

K_z Height and Exposure Factor (Sign 3.8.4, Eq. C3-1)

$z_{CL\_truss} := (713.36 + 18.25 + 0.5 \cdot 16.5)\text{ft}$

(Elevation at C/L of sign truss.)

$z_{CL\_truss} = 739.86\text{ ft}$

$z_{Datum} := 713.36\text{ft}$

$z_{Datum} = 713.36\text{ ft}$

$z := \max(z_{CL\_truss} - z_{Datum}, 16.4\text{ft})$ $z = 26.5\text{ ft}$

For exposure C:

$z_g := 900\text{ft}$

$\alpha := 9.5$ $K_z := 2.01 \cdot \left(\frac{z}{z_g}\right)^{\frac{2}{\alpha}}$

$K_z = 0.957$

G Gust Effect Factor

$G := 1.14$ (Stign 3.8.5)

V Basic Wind Speed (mph)

$V := 90\text{mph}$ (Sign Figure 3-2b)

I_r Importance Factor

For Recurrence Interval of 50 Years:

$I_r := 1.0$ (Sign Table 3-2)

C_d Drag Coefficient, varies by element type. (Sign Table 3-6)

Velocity Conversion Factor: (Sign Table 3-4)

$C_v := 1.0$ (For Recurrence Interval of 50 Years)

Chord Members: Cylindrical. Apply wind load to both front and rear chords.

$C_v \cdot V \cdot D_{ch} = 33.75 \cdot \text{mph} \cdot \text{ft}$ (Sign Table 3-6)

$$C_{d\_ch} := \begin{cases} 1.10 & \text{if } C_v \cdot V \cdot D_{ch} \le 39\text{mph}\cdot\text{ft} \\ \left[\dfrac{129}{\left(C_v \cdot V \cdot D_{ch} \cdot \dfrac{1}{\text{mph}\cdot\text{ft}}\right)^{1.3}}\right] & \text{if } 39\text{mph}\cdot\text{ft} < C_v \cdot V \cdot D_{ch} < 78\text{mph}\cdot\text{ft} \\ 0.45 & \text{otherwise} \end{cases}$$

$$C_{d\_ch} = 1.1$$

Tower Members: Cylindrical. Apply wind load to both front and rear columns.

$C_v \cdot V \cdot D_{to} = 150 \cdot \text{mph}\cdot\text{ft}$ (Sign Table 3-6)

$$C_{d\_to} := \begin{cases} 1.10 & \text{if } C_v \cdot V \cdot D_{to} \le 39\text{mph}\cdot\text{ft} \\ \left[\dfrac{129}{\left(C_v \cdot V \cdot D_{to} \cdot \dfrac{1}{\text{mph}\cdot\text{ft}}\right)^{1.3}}\right] & \text{if } 39\text{mph}\cdot\text{ft} < C_v \cdot V \cdot D_{to} < 78\text{mph}\cdot\text{ft} \\ 0.45 & \text{otherwise} \end{cases}$$

$$C_{d\_to} = 0.45$$

Angle Members:

Apply wind load to both front and rear members.

$C_{d\_flat} := 1.70$ (Flat member, including plates and angles)

Catwalk Side (Toe & Heel) Plates:

$C_{d\_flat} = 1.7$ (Flat member)

Sign:

$C_{d\_sign} := 1.20$ (Conservative. For L_{sign}/W_{sign} of up to 5.)

Wind Pressure for Drag Coefficient C_d of 1.0:

$$P_{z\_o} := 0.00256 \cdot K_z \cdot G \cdot \left(\frac{V}{\text{mph}}\right)^2 \cdot I_r \cdot (1.0)\text{psf} \qquad P_{z\_o} = 22.621 \frac{\text{lb}}{\text{ft}^2}$$

Wind Load:

Distributed wind load per linear foot of member:

Truss Members:

Chord Members: $H\_Wind_{ch} := P_{z\_o} \cdot C_{d\_ch} \cdot D_{ch}$ $\quad H\_Wind_{ch} = 9.331 \frac{\text{lb}}{\text{ft}}$

Tower Columns: $H\_Wind_{to} := P_{z\_o} \cdot C_{d\_to} \cdot D_{to}$ $\quad H\_Wind_{to} = 16.966 \frac{\text{lb}}{\text{ft}}$

Boxed End Members: $H\_Wind_{be} := P_{z\_o} \cdot C_{d\_flat} \cdot b_{be}$ $H\_Wind_{be} = 9.614 \frac{lb}{ft}$

(In the AISC Shapes Database, b is the longer leg length of angle.)

Transverse Web Members: $H\_Wind_{tr} := P_{z\_o} \cdot C_{d\_flat} \cdot b_{tr} \cdot \left(\frac{d_{truss}}{L_{tr}}\right)$

$H\_Wind_{tr} = 6.409 \frac{lb}{ft}$

$\frac{d_{truss}}{L_{tr}}$ = Ratio of the length of member projected on a vertical plane parallel to sign faces to the actual length of member.

Top and Bottom Web Members: $H\_Wind_{tb} := \left(P_{z\_o} \cdot C_{d\_flat} \cdot b_{tb}\right) \cdot 0$ $H\_Wind_{tb} = 0$

(Top and bottom web members are shielded by the chords.)

Front and Rear Web Members: $H\_Wind_{fr} := P_{z\_o} \cdot C_{d\_flat} \cdot b_{fr}$ $H\_Wind_{fr} = 9.614 \frac{lb}{ft}$

Tower Web Web Members: $H\_Wind_{tw} := \left(P_{z\_o} \cdot C_{d\_flat} \cdot b_{tw}\right) \cdot 0$ $H\_Wind_{tw} = 0$

(Tower web members are shielded by the tower columns.)

Sign:

Sign Configuration:

$w_{sg} := P_{z\_o} \cdot C_{d\_sign}$ $w_{sg} = 27.145 \cdot psf$ (Wind pressure on sign panel)

$A_{sg} := D_{sign} \cdot L_{web\_section}$ $A_{sg} = 89.333\, ft^2$ $w_{sg} \cdot A_{sg} = 2.425 \cdot kip$

$H\_Wind_{sign\_node} := \frac{w_{sg} \cdot A_{sg}}{2}$ $H\_Wind_{sign\_node} = 1.212 \cdot kip$

(force to apply to each top and bottom chord node)

Catwalk:

$d_{sideplate} = 6 \cdot in$ (depth of catwalk side (toe & heel) plates)

$P_{wind\_catwalk} := 0$

(Wind force on the two catwalk side plates per design section, increased 30% to account for the wind load on exposed catwalk vertical supports, rails, future lights, etc.)

$P_{wind\_catwalk} = 0$

Equivalent Wind Load Derivation:

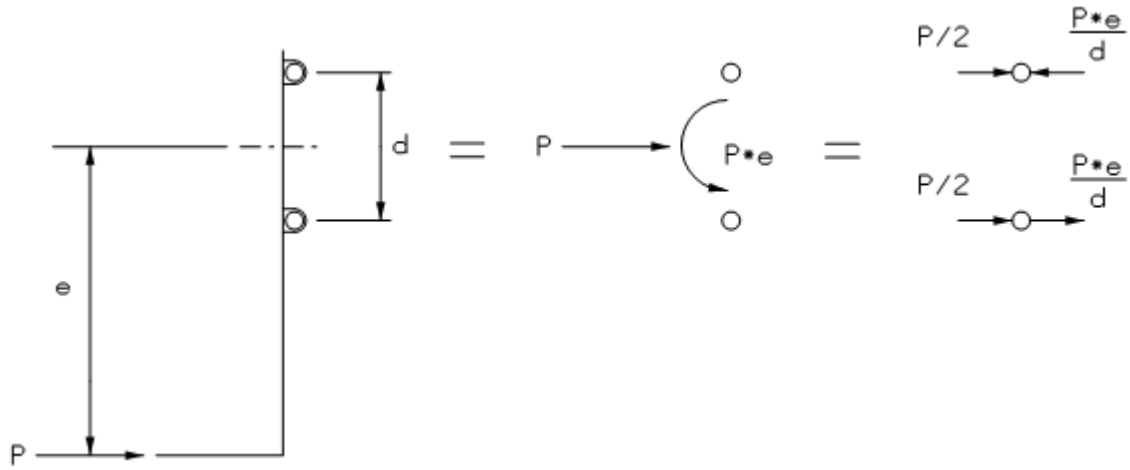

$$H\_Wind_{catwalk\_node\_centered} := \frac{P_{wind\_catwalk}}{2}$$

$$H\_Wind_{catwalk\_node\_centered} = 0$$

$d_{catwalk\_to\_CL\_truss} = 8\,ft$ (Eccentricity of horizontal force on catwalk from C/L truss)

$$H\_Wind_{catwalk\_node\_eccentric} := \frac{P_{wind\_catwalk} \cdot d_{catwalk\_to\_CL\_truss}}{d_{truss}}$$

$$H\_Wind_{catwalk\_node\_eccentric} = 0$$

$$H\_Wind_{catwalk\_top\_node} := H\_Wind_{catwalk\_node\_centered} - H\_Wind_{catwalk\_node\_eccentric}$$

$$H\_Wind_{catwalk\_top\_node} = 0$$

$$H\_Wind_{catwalk\_bottom\_node} := H\_Wind_{catwalk\_node\_centered} + H\_Wind_{catwalk\_node\_eccentric}$$

$$H\_Wind_{catwalk\_bottom\_node} = 0 \cdot lb$$

<u>Summary of Wind Load on Sign and Catwalk:</u>

$$H\_Wind_{top\_node} := H\_Wind_{sign\_node}$$

$$H\_Wind_{top\_node} = 1.212 \times 10^{3}\,lb$$

$$H\_Wind_{bottom\_node} := H\_Wind_{sign\_node}$$

$$H\_Wind_{bottom\_node} = 1.212 \times 10^{3}\,lb$$

1.5 Summary of Applied Strength Loads

Table 1.1

Disributed Loads to Apply to Each Member

	Strength Loads	
Element Type	**Ice (lb/ft)**	**Wind (lb/ft)**
Chord	3.5	9.3
Tower	15.7	17.0
Boxed End	3.0	9.6
Transverse Web	2.5	6.4
Front & Rear Web	3.0	9.6
Top & Bottom Web	3.0	0.0
Tower Web	4.0	0.0

Table 1.2

Point Loads to Apply to Chord Nodes Where Design Sign is Hung

	Strength Loads				
	Dead Load (lb)		**Ice (lb)**		**Wind (lb)**
Element Type:	**Vertical**	**Horizontal**	**Vertical**	**Horizontal**	**Horizontal**
Sign, Top Node	134	-41	134	-41	1212
Sign, Bottom Node	134	41	134	41	1212
Catwalk, Top Node	0	0	0	0	0
Catwalk, Bottom Node	0	0	0	0	0
Alum. Vert. Support, Top Node	53	-8	58	-9	0
Alum. Vert. Support, Bot. Node	53	8	58	9	0
Top Node Σ	187	-50	192	-50	1212
Bottom Node Node Σ	187	50	192	50	1212

Load Combinations Used in RISA-3D for Strength Analysis:
I: 1.33x1.45DL
II(a1): 1.45(DL+1.0NW+0.2TW)
II(a2): 1.45(DL-1.0NW+0.2TW)
II(b1): 1.45(DL+0.6NW+0.3TW)
II(b2): 1.45(DL-0.6NW+0.3TW)
III(a1): 1.45(DL+ICE+0.5(NW+0.2TW)
III(a2): 1.45(DL+ICE+0.5(-NW+0.2TW)

Notes:
NW: Normal component of Basic Wind Load (Sign 3.9.3, Figure 3-3)
TW: Transverse component of Basic Wind Load (Sign 3.9.3, Figure 3-3)
Load combinations 1.45(DL+ICE+0.5(+/-0.6NW+0.3TW) do not control.

In RISA-3D, under Global Parameters >> Codes >> Hot Rolled Steel, select "AISC 9th: ASD." See the notes at right in Mathcad file for an explanation.

Modeling:
- The tower columns are fixed at the bottom.
- The space truss is simply supported by tower columns. See a note in Mathcad file for details.
- Angles are pinned at their ends.

2.0 Summary of RISA-3D Strength Load Output

Divide RISA-3D output results by 1.92:
1.45 x 1.33 = approximately 1.92.

- For Strength Analysis, second-order effects are considered. The applied loads in RISA-3D are multiplied by a factor of 1.45. To convert the factored load effects to working load effects, the results from RISA-3D need to be divided by a factor of 1.45. (Detailed method in accordance with Sign 4.8.2.)
- By dividing the results further by 1.33, no overstress factors (133%) shall be computed above normal (100%) allowable stresses in the strength design calculations.

To select the controlling member and load combination for each member set (Chord, Top and bottom web members, etc.):

- Identify several candidate members with high axial forces and moments.
- Display Detail Report of a candidate member.
- Record a combined stress of $\mathbf{f_a}$ (axial stress) + either $\mathbf{f_c}$ (compressive stress from bending moment) or $\mathbf{f_t}$ (tensile stress from bending moment).
- Obtain the combined stresses for the rest of the candiate members.
- Compare the combind stresses.
- The member and load combination with the highest combined stress, is the controlling member and load combination.

The contribution of shear stress is usually very small and disregarded in the selection process.

Take the absolute maximum axial force for design of single-angle members.

The design of single-angle web members in this Mathcad file is determined by the maximum compressive force applied to the members, in accordance with AISC 360-10 E5.
The actual constructed sign truss can have an arrangement of web members different from the RISA-3D model. The magnitude of maximum compression and tension can switch.
Therefore, we will use the absolute maximum axial force for the design of single-angle web members.

Dead Load Deflection and Camber:

Via RISA-3D, unfactored dead load deflection with actual signage on truss including future catwalk below actual signage is: $Defl_{DL} := 2.5 \cdot in$ (Not Applicable to a Single-Column Cantilever Sign Truss)

Additionally, provide permanent camber equal to *L*/1000 per Sign 10.5.

$$\frac{L_{structure}}{1000} = 0.372 \cdot in$$

$$Camber := Ceil\left(Defl_{DL} + \frac{L_{structure}}{1000}, 0.125 \cdot in\right) \qquad Camber = 2.875 \cdot in$$

RISA-3D Output of Forces:

Table 2.1 Maximum Demands on Chords and Tower Columns

Element	P (kip)	V_y (kip)	V_z (kip)	M_y (k-ft)	M_z (k-ft)	Torque (kip-ft)	Load Comb	Location
Chord, comp.	**54.8**	**13.5**	**10.0**	**0.9**	**1.3**	**0.0**	**II(a1)**	**Rear Bottom Chord**
Chord, tens.	**37.2**	**5.6**	**1.0**	**2.1**	**0.4**	**0.0**	**II(a1)**	**Top Front Chord**
Tower, comp.	**14.5**	**2.9**	**14.1**	**373.4**	**192.4**	**273.8**	**II(a2)**	**Base of Column**
Tower, tens.	**9.0**	**22.5**	**6.5**	**2.4**	**4.0**	**101.4**	**II(a2)**	**.9 ft Top Column**

comp.: Maximum **compression** and associated forces and moments.

tens.: Maximum **tension** and associated forces and moments.

Table 2.2 Maximum Demands on Angles*

Element	P (kip)	V_y (kip)	V_z (kip)	M_y (k-ft)	M_z (k-ft)	Torque (kip-ft)	Load Comb	Location
Boxed End	**11.8**	**0.0**	**0.0**	**0.0**	**0.0**	**0.0**	**III(a2)**	**Rear Next to Cloumn**
Trans. Web	**5.7**	**0.0**	**0.0**	**0.0**	**0.0**	**0.0**	**III(a1)**	**Front Next to Cloumn**
F/R Web	**10.3**	**0.0**	**0.0**	**0.0**	**0.0**	**0.0**	**III(a2)**	**Front Next to Cloumn**
T/B Web	**13.9**	**0.0**	**0.0**	**0.0**	**0.0**	**0.0**	**II(a1)**	**Bottom next to Column**
Diagonal	**0.0**	**0.0**	**0.0**	**0.0**	**0.0**	**0.0**	**III(a1)**	**Middle of Left Tower**

* The combination of forces and moments that causes the maximum stress in a member set, regardless of whether the combined stress is compressive stress or tensile stress.

After dividing the RISA-3D results by **1.92** :

Table 2.3 Maximum Demands on Chords and Tower Columns for Strength Analysis

Element	P (kip)	V_y (kip)	V_z (kip)	M_y (k-ft)	M_z (k-ft)	Torque (k-ft)
Chord, comp.	28.6	7.0	5.2	0.5	0.7	0.0
Chord, tens.	19.3	2.9	0.5	1.1	0.2	0.0
Tower, comp.	7.6	1.5	7.3	194.5	100.2	142.6
Tower, tens.	4.7	11.7	3.4	1.3	2.1	52.8

Table 2.4 Maximum Demands on Angles for Strength Analysis

Element	P (kip)	V_y (kip)	V_z (kip)	M_y (k-ft)	M_z (k-ft)	Torque (k-ft)
Boxed End	6.2	0.0	0.0	0.0	0.0	0.0
Trans. Web	3.0	0.0	0.0	0.0	0.0	0.0
F/R Web	5.4	0.0	0.0	0.0	0.0	0.0
T/B Web	7.2	0.0	0.0	0.0	0.0	0.0
Diagonal	0.0	0.0	0.0	0.0	0.0	0.0

3.0 Design of Members Based on Strength

3.1 Chord Analysis

Chord = "HSS4.500X0.375"

Properties:

$F_{y\_HSS} = 42 \cdot ksi$ $F_u = 58 \cdot ksi$ $E = 2.9 \times 10^4 \cdot ksi$ $k_{ch} := 1$

$L_{b\_ch} := 2 \cdot d_{truss}$ (Maximum unbraced length of member)

$A_{ch} = 4.55 \cdot in^2$ $D_{ch} = 4.5 \cdot in$ (OD) $t_{ch} = 0.349 \cdot in$ (t design)

$I_{ch} = 9.87 \cdot in^4$ $S_{ch} = 4.39 \cdot in^3$ $t_{nom\_ch} = 0.375 \cdot in$ (t nominal)

$r_{ch} = 1.47 \cdot in$ (Radius of gyration) $J_{ch} = 19.7 \cdot in^4$

Demands

$P_{ch\_comp} = 28.552 \cdot kip$ $P_{ch\_tens} = 19.349 \cdot kip$

$Vy_{ch\_comp} = 7.031 \cdot kip$ $Vy_{ch\_tens} = 2.927 \cdot kip$

$Vz_{ch\_comp} = 5.208 \cdot kip$ $Vz_{ch\_tens} = 0.521 \cdot kip$

$My_{ch\_comp} = 0.474 \cdot kip \cdot ft$ $My_{ch\_tens} = 1.099 \cdot kip \cdot ft$

$Mz_{ch\_comp} = 0.677 \cdot kip \cdot ft$ $Mz_{ch\_tens} = 0.224 \cdot kip \cdot ft$

$Torque_{ch\_comp} = 0 \cdot kip \cdot ft$ $Torque_{ch\_tens} = 0 \cdot kip \cdot ft$

Bending Stress

Combine My and Mz for a circular cross section:

$$M_{ch\_comp} := \sqrt{My_{ch\_comp}^2 + Mz_{ch\_comp}^2} \qquad M_{ch\_tens} := \sqrt{My_{ch\_tens}^2 + Mz_{ch\_tens}^2}$$

$$M_{ch\_comp} = 0.826 \cdot kip \cdot ft \qquad M_{ch\_tens} = 1.122 \cdot kip \cdot ft$$

$$f_{b\_ch\_comp} := \frac{M_{ch\_comp} \cdot \frac{D_{ch}}{2}}{I_{ch}} \qquad f_{b\_ch\_tens} := \frac{M_{ch\_tens} \cdot \frac{D_{ch}}{2}}{I_{ch}}$$

$$f_{b\_ch\_comp} = 2.261 \cdot ksi \qquad f_{b\_ch\_tens} = 3.068 \cdot ksi$$

Local Buckling (Sign 5.5.2, Table 5-1)

For round tube sections:

$\lambda_{ch} := \frac{D_{ch}}{t_{ch}}$ $\lambda_{ch} = 12.894$ (Width-Thickness Ratio)

$\lambda_{p\_ch} := 0.13 \cdot \frac{E}{F_{y\_HSS}}$ $\lambda_{p\_ch} = 89.762$ (Compact Limit)

$\lambda_{r\_ch} := 0.26 \cdot \frac{E}{F_{y\_HSS}}$ $\lambda_{r\_ch} = 179.524$ (Noncompact Limit)

$\lambda_{max\_ch} := 0.45 \cdot \frac{E}{F_{y\_HSS}}$ $\lambda_{max\_ch} = 310.714$ (Maximum Limit)

Allowable Bending Stress (Sign 5.6, Table 5-3)

For round tube sections:

$$F_{b\_ch} := \begin{cases} 0.66 F_{y\_HSS} & \text{if } \lambda_{ch} \le \lambda_{p\_ch} \\ 0.39 \cdot F_{y\_HSS} \cdot \left(1 + \frac{0.09 \cdot \frac{E}{F_{y\_HSS}}}{\frac{D_{ch}}{t_{ch}}} \right) & \text{if } \lambda_{p\_ch} < \lambda_{ch} \le \lambda_{r\_ch} \\ 0.39 \cdot F_{y\_HSS} \cdot \left(1 + \frac{0.09 \cdot \frac{E}{F_{y\_HSS}}}{\frac{D_{ch}}{t_{ch}}} \right) & \text{otherwise} \end{cases}$$

$F_{b\_ch} = 27.72 \cdot ksi$

Ratio of Applied Stress to Allowable Stress

$\frac{f_{b\_ch\_comp}}{F_{b\_ch}} = 0.082$ $\frac{f_{b\_ch\_tens}}{F_{b\_ch}} = 0.111$

Tensile Stress

$f_{t\_ch} := \frac{P_{ch\_tens}}{A_{ch}} = 4.253 \cdot ksi$

Allowable Tensile Stress (Sign 5.9)

$F_{t\_ch} := 0.6 F_{y\_HSS}$ $F_{t\_ch} = 25.2 \cdot ksi$ (Allowable tensile stress on gross area)

Ratio of Applied Stress to Allowable Stress

$\frac{f_{t\_ch}}{F_{t\_ch}} = 0.169$

Compressive Stress

$f_{c\_ch} := \frac{P_{ch\_comp}}{A_{ch}}$ $f_{c\_ch} = 6.275 \cdot ksi$

Allowable Compressive Stress

(Sign 5.10)

$k_{ch} = 1$

$L_{b\_ch} = 10\,ft$ (Maximum unbraced length of member)

$r_{ch} = 1.47 \cdot in$ $\qquad \dfrac{k_{ch} \cdot L_{b\_ch}}{r_{ch}} = 81.633$ (Slenderness rato)

$$C_{c\_ch} := \sqrt{2 \cdot \pi^2 \cdot \frac{E}{F_{y\_HSS}}} \qquad C_{c\_ch} = 116.745 \qquad \chi_{ch} := \frac{\left(\dfrac{k_{ch} \cdot L_{b\_ch}}{r_{ch}}\right)}{C_{c\_ch}} \qquad \chi_{ch} = 0.699$$

$$F_{c\_ch} := \begin{cases} \dfrac{\left(1 - \dfrac{\chi_{ch}^2}{2}\right) \cdot F_{y\_HSS}}{\dfrac{5}{3} + \dfrac{3}{8}\chi_{ch} - \dfrac{\chi_{ch}^3}{8}} & \text{if } \chi_{ch} < 1 \\ \dfrac{12 \cdot \pi^2 \cdot E}{23 \cdot \left(\dfrac{k_{ch} \cdot L_{b\_ch}}{r_{ch}}\right)^2} & \text{if } \chi_{ch} \geq 1 \end{cases} \qquad F_{c\_ch} = 16.824 \cdot ksi$$

Ratio of Applied Stress to Allowable Stress

$$\frac{f_{c\_ch}}{F_{c\_ch}} = 0.373$$

Shear Stress

Combine Vy and Vz for a circular cross section:

$$V_{ch\_comp} := \sqrt{Vy_{ch\_comp}^2 + Vz_{ch\_comp}^2} \qquad V_{ch\_tens} := \sqrt{Vy_{ch\_tens}^2 + Vz_{ch\_tens}^2}$$

$V_{ch\_comp} = 8.75 \cdot kip$ $\qquad V_{ch\_tens} = 2.973 \cdot kip$

$$f_{v\_ch\_comp} := \frac{2 \cdot V_{ch\_comp}}{A_{ch}} + \frac{Torque_{ch\_comp} \cdot \left(\dfrac{D_{ch}}{2}\right)}{J_{ch}}$$

(2V/A is based on the shear stress equation for thin-walled tubes, *Mechanics of Materials* by Gere and Timoshenko, 3rd Edition)

$$\frac{2 \cdot V_{ch\_comp}}{A_{ch}} = 3.846 \cdot ksi \qquad \frac{Torque_{ch\_comp} \cdot \left(\dfrac{D_{ch}}{2}\right)}{J_{ch}} = 0 \cdot ksi$$

$f_{v\_ch\_comp} = 3.846 \cdot ksi$

$$f_{v\_ch\_tens} := \frac{2 \cdot V_{ch\_tens}}{A_{ch}} + \frac{Torque_{ch\_tens} \cdot \left(\frac{D_{ch}}{2}\right)}{J_{ch}}$$

$$\frac{2 \cdot V_{ch\_tens}}{A_{ch}} = 1.307 \cdot ksi \qquad \frac{Torque_{ch\_tens} \cdot \left(\frac{D_{ch}}{2}\right)}{J_{ch}} = 0 \cdot ksi$$

$f_{v\_ch\_tens} = 1.307 \cdot ksi$

Allowable Shear Stress:

For round, tubular shapes: (Sign 5.11.1)

$$\frac{D_{ch}}{t_{ch}} = 12.894 \qquad 1.16 \cdot \left(\frac{E}{F_{y\_HSS}}\right)^{\frac{2}{3}} = 90.62$$

$$F_{v\_ch} := \begin{cases} 0.33 F_{y\_HSS} & \text{if } \frac{D_{ch}}{t_{ch}} \le 1.16 \cdot \left(\frac{E}{F_{y\_HSS}}\right)^{\frac{2}{3}} \\ \frac{0.41E}{\left(\lambda_{ch}^{\frac{3}{2}}\right)} & \text{if } \frac{D_{ch}}{t_{ch}} > 1.16 \cdot \left(\frac{E}{F_{y\_HSS}}\right)^{\frac{2}{3}} \end{cases}$$

(Sign Eq. 5-11)

(Sign Eq. 5-12)

$F_{v\_ch} = 13.86 \cdot ksi$

Ratio of Applied Stress to Allowable Stress

$$\frac{f_{v\_ch\_comp}}{F_{v\_ch}} = 0.278 \qquad \frac{f_{v\_ch\_tens}}{F_{v\_ch}} = 0.094$$

Combined Stress Limits: (Sign 5.12)

Compression, Bending, and Shear: (Sign 5.12.2.1)

$$Ratio_{c\_combined\_1\_ch} := \frac{f_{c\_ch}}{0.6 \cdot F_{y\_HSS}} + \frac{f_{b\_ch\_comp}}{F_{b\_ch}} + \left(\frac{f_{v\_ch\_comp}}{F_{v\_ch}}\right)^2$$

(Sign Eq. 5-17)

$$\frac{f_{c\_ch}}{0.6 \cdot F_{y\_HSS}} = 0.249 \qquad \frac{f_{b\_ch\_comp}}{F_{b\_ch}} = 0.082 \qquad \left(\frac{f_{v\_ch\_comp}}{F_{v\_ch}}\right)^2 = 0.077$$

$Ratio_{c\_combined\_1\_ch} = 0.408$ $\qquad$ $Check\_1\_ch := \begin{cases} \text{"OK"} & \text{if } Ratio_{c\_combined\_1\_ch} \le 1 \\ \text{"NOT OK, REDESIGN"} & \text{otherwise} \end{cases}$

Check_1_ch = "OK"

$$F'_{e\_ch} := \frac{12 \cdot \pi^2 \cdot E}{23 \cdot \left(\frac{k_{ch} \cdot L_{b\_ch}}{r_{ch}}\right)^2} \qquad F'_{e\_ch} = 22.409 \cdot ksi$$

(Sign Eq. 5-18)

$$Ratio_{c\_combined\_2\_ch} := \frac{f_{c\_ch}}{F_{c\_ch}} + \frac{f_{b\_ch\_comp}}{\left(1 - \frac{f_{c\_ch}}{F'_{e\_ch}}\right) F_{b\_ch}} + \left(\frac{f_{v\_ch\_comp}}{F_{v\_ch}}\right)^2$$

(Sign Eq. 5-18)

$$\frac{f_{c\_ch}}{F_{c\_ch}} = 0.373 \qquad \frac{f_{b\_ch\_comp}}{\left(1 - \frac{f_{c\_ch}}{F'_{e\_ch}}\right) F_{b\_ch}} = 0.113 \qquad \left(\frac{f_{v\_ch\_comp}}{F_{v\_ch}}\right)^2 = 0.077$$

$Ratio_{c\_combined\_2\_ch} = 0.563$ $\qquad$ $Check\_2\_ch := \begin{cases} \text{"OK"} & \text{if } Ratio_{c\_combined\_2\_ch} \le 1.0 \\ \text{"NOT OK, REDESIGN"} & \text{otherwise} \end{cases}$

Check_2_ch = "OK"

Tension, Bending, and Shear:

(Sign 5.12.2.2)

$$Ratio_{t\_combined\_ch} := \frac{f_{t\_ch}}{F_{t\_ch}} + \frac{f_{b\_ch\_tens}}{F_{b\_ch}} + \left(\frac{f_{v\_ch\_tens}}{F_{v\_ch}}\right)^2$$

(Sign Eq. 5-20)

$$\frac{f_{t\_ch}}{F_{t\_ch}} = 0.169 \qquad \frac{f_{b\_ch\_tens}}{F_{b\_ch}} = 0.111 \qquad \left(\frac{f_{v\_ch\_tens}}{F_{v\_ch}}\right)^2 = 8.89 \times 10^{-3}$$

$Ratio_{t\_combined\_ch} = 0.288$ $\qquad$ $Check\_3\_ch := \begin{cases} \text{"OK"} & \text{if } Ratio_{t\_combined\_ch} \le 1.0 \\ \text{"NOT OK, REDESIGN"} & \text{otherwise} \end{cases}$

Check_3_ch = "OK"

3.2 Tower Analysis

Tower = "HSS20X0.500"

Properties:

$F_{y\_HSS} = 42 \cdot ksi$ $\qquad$ $F_u = 58 \cdot ksi$ $\qquad$ $E = 2.9 \times 10^4 \cdot ksi$ $\qquad$ $k_{to} := 2.1$

$L_{b\_to} := (26.25 + 2.5)ft$ $\qquad$ (Height from column base to C/L of truss)

$L_{b\_to} = 28.75\ ft$

$A_{to} = 28.5 \cdot in^2$ $D_{to} = 20 \cdot in$ (OD) $t_{to} = 0.465 \cdot in$ (t design)

$I_{to} = 1.36 \times 10^3 \cdot in^4$ $S_{to} = 136 \cdot in^3$ $t_{nom\_to} = 0.5 \cdot in$ (t nominal)

$r_{to} = 6.91 \cdot in$ (Radius of gyration) $J_{to} = 2.72 \times 10^3 \cdot in^4$

Demands

$P_{to\_comp} = 7.552 \cdot kip$ $P_{to\_tens} = 4.682 \cdot kip$

$Vy_{to\_comp} = 1.505 \cdot kip$ $Vy_{to\_tens} = 11.703 \cdot kip$

$Vz_{to\_comp} = 7.339 \cdot kip$ $Vz_{to\_tens} = 3.375 \cdot kip$

$My_{to\_comp} = 194.479 \cdot kip \cdot ft$ $My_{to\_tens} = 1.25 \cdot kip \cdot ft$

$Mz_{to\_comp} = 100.207 \cdot kip \cdot ft$ $Mz_{to\_tens} = 2.083 \cdot kip \cdot ft$

$Torque_{to\_comp} = 142.604 \cdot kip \cdot ft$ $Torque_{to\_tens} = 52.813 \cdot kip \cdot ft$

Bending Stress

Combine My and Mz for a circular cross section:

$$M_{to\_comp} := \sqrt{My_{to\_comp}^2 + Mz_{to\_comp}^2} \qquad M_{to\_tens} := \sqrt{My_{to\_tens}^2 + Mz_{to\_tens}^2}$$

$$M_{to\_comp} = 218.778 \cdot kip \cdot ft \qquad M_{to\_tens} = 2.43 \cdot kip \cdot ft$$

$$f_{b\_to\_comp} := \frac{M_{to\_comp} \cdot \frac{D_{to}}{2}}{I_{to}} \qquad f_{b\_to\_tens} := \frac{M_{to\_tens} \cdot \frac{D_{to}}{2}}{I_{to}}$$

$$f_{b\_to\_comp} = 19.304 \cdot ksi \qquad f_{b\_to\_tens} = 0.214 \cdot ksi$$

Local Buckling (Sign 5.5.2, Table 5-1)

For round tube sections:

$\lambda_{to} := \frac{D_{to}}{t_{to}}$ $\lambda_{to} = 43.011$ (Width-Thickness Ratio)

$\lambda_{p\_to} := 0.13 \cdot \frac{E}{F_{y\_HSS}}$ $\lambda_{p\_to} = 89.762$ (Compact Limit)

$\lambda_{r\_to} := 0.26 \cdot \frac{E}{F_{y\_HSS}}$ $\lambda_{r\_to} = 179.524$ (Noncompact Limit)

$\lambda_{max\_to} := 0.45 \cdot \frac{E}{F_{y\_HSS}}$ $\lambda_{max\_to} = 310.714$ (Maximum Limit)

Allowable Bending Stress (Sign 5.6, Table 5-3)

For round tube sections:

$$F_{b\_to} := \begin{cases} 0.66F_{y\_HSS} & \text{if } \lambda_{to} \le \lambda_{p\_to} \\ 0.39 \cdot F_{y\_HSS} \cdot \left(1 + \dfrac{0.09 \cdot \dfrac{E}{F_{y\_HSS}}}{\dfrac{D_{to}}{t_{to}}} \right) & \text{if } \lambda_{p\_to} < \lambda_{to} \le \lambda_{r\_to} \\ 0.39 \cdot F_{y\_HSS} \cdot \left(1 + \dfrac{0.09 \cdot \dfrac{E}{F_{y\_HSS}}}{\dfrac{D_{to}}{t_{to}}} \right) & \text{otherwise} \end{cases}$$

$F_{b\_to} = 27.72 \cdot ksi$

Ratio of Applied Stress to Allowable Stress

$$\frac{f_{b\_to\_comp}}{F_{b\_to}} = 0.696 \qquad \frac{f_{b\_to\_tens}}{F_{b\_to}} = 7.734 \times 10^{-3}$$

Tensile Stress

$$f_{t\_to} := \frac{P_{to\_tens}}{A_{to}} = 0.164 \cdot ksi$$

Allowable Tensile Stress (Sign 5.9)

$F_{t\_to} := 0.6F_{y\_HSS}$ $F_{t\_to} = 25.2 \cdot ksi$ (Allowable tensile stress on gross area)

Ratio of Applied Stress to Allowable Stress

$$\frac{f_{t\_to}}{F_{t\_to}} = 6.519 \times 10^{-3}$$

Compressive Stress

$$f_{c\_to} := \frac{P_{to\_comp}}{A_{to}} \qquad f_{c\_to} = 0.265 \cdot ksi$$

Allowable Compressive Stress (Sign 5.10)

$k_{to} = 2.1$

$L_{b\_to} = 28.75\ ft$ (Maximum unbraced length of member)

$r_{to} = 6.91 \cdot in$ $\qquad \dfrac{k_{to} \cdot L_{b\_to}}{r_{to}} = 104.848$ (Slenderness rato)

$C_{c\_to} := \sqrt{2 \cdot \pi^2 \cdot \dfrac{E}{F_{y\_HSS}}}$ $\qquad C_{c\_to} = 116.745$ $\qquad \chi_{to} := \dfrac{\left(\dfrac{k_{to} \cdot L_{b\_to}}{r_{to}}\right)}{C_{c\_to}}$ $\qquad \chi_{to} = 0.898$

$$F_{c\_to} := \begin{cases} \dfrac{\left(1 - \dfrac{\chi_{to}^2}{2}\right) \cdot F_{y\_HSS}}{\dfrac{5}{3} + \dfrac{3}{8}\chi_{to} - \dfrac{\chi_{to}^3}{8}} & \text{if } \chi_{to} < 1 \\ \dfrac{12 \cdot \pi^2 \cdot E}{23 \cdot \left(\dfrac{k_{to} \cdot L_{b\_to}}{r_{to}}\right)^2} & \text{if } \chi_{to} \geq 1 \end{cases}$$

$F_{c\_to} = 13.102 \cdot ksi$

Ratio of Applied Stress to Allowable Stress

$$\frac{f_{c\_to}}{F_{c\_to}} = 0.02$$

Shear Stress

Combine Vy and Vz for a circular cross section:

$V_{to\_comp} := \sqrt{Vy_{to\_comp}^2 + Vz_{to\_comp}^2}$ $\qquad V_{to\_tens} := \sqrt{Vy_{to\_tens}^2 + Vz_{to\_tens}^2}$

$V_{to\_comp} = 7.491 \cdot kip$ $\qquad V_{to\_tens} = 12.18 \cdot kip$

$$f_{v\_to\_comp} := \frac{2 \cdot V_{to\_comp}}{A_{to}} + \frac{Torque_{to\_comp} \cdot \left(\dfrac{D_{to}}{2}\right)}{J_{to}}$$

(2V/A is based on the shear stress equation for thin-walled tubes, *Mechanics of Materials* by Gere and Timoshenko, 3rd Edition)

$\dfrac{2 \cdot V_{to\_comp}}{A_{to}} = 0.526 \cdot ksi$ $\qquad \dfrac{Torque_{to\_comp} \cdot \left(\dfrac{D_{to}}{2}\right)}{J_{to}} = 6.291 \cdot ksi$

$f_{v\_to\_comp} = 6.817 \cdot ksi$

$$f_{v\_to\_tens} := \frac{2 \cdot V_{to\_tens}}{A_{to}} + \frac{Torque_{to\_tens} \cdot \left(\frac{D_{to}}{2}\right)}{J_{to}}$$

$$\frac{2 \cdot V_{to\_tens}}{A_{to}} = 0.855 \cdot ksi \qquad \frac{Torque_{to\_tens} \cdot \left(\frac{D_{to}}{2}\right)}{J_{to}} = 2.33 \cdot ksi$$

$$f_{v\_to\_tens} = 3.185 \cdot ksi$$

Allowable Shear Stress:

For round, tubular shapes: (Sign 5.11.1)

$$\frac{D_{to}}{t_{to}} = 43.011 \qquad 1.16 \cdot \left(\frac{E}{F_{y\_HSS}}\right)^{\frac{2}{3}} = 90.62$$

$$F_{v\_to} := \begin{cases} 0.33 F_{y\_HSS} & \text{if } \frac{D_{to}}{t_{to}} \le 1.16 \cdot \left(\frac{E}{F_{y\_HSS}}\right)^{\frac{2}{3}} \\ \frac{0.41E}{\left(\lambda_{to}^{\frac{3}{2}}\right)} & \text{if } \frac{D_{to}}{t_{to}} > 1.16 \cdot \left(\frac{E}{F_{y\_HSS}}\right)^{\frac{2}{3}} \end{cases}$$

(Sign Eq. 5-11)

(Sign Eq. 5-12)

$$F_{v\_to} = 13.86 \cdot ksi$$

Ratio of Applied Stress to Allowable Stress

$$\frac{f_{v\_to\_comp}}{F_{v\_to}} = 0.492 \qquad \frac{f_{v\_to\_tens}}{F_{v\_to}} = 0.23$$

Combined Stress Limits: (Sign 5.12)

Compression, Bending, and Shear: (Sign 5.12.1)

$C_A := 1$

(The detailed procedure of Article 4.8.2 is used to calculate second-order effects.)

$$Ratio_{c\_combined\_to} := \frac{f_{c\_to}}{0.6 \cdot F_{y\_HSS}} + \frac{f_{b\_to\_comp}}{C_A \cdot F_{b\_to}} + \left(\frac{f_{v\_to\_comp}}{F_{v\_to}}\right)^2$$

(Sign Eq. 5-16)

$$\frac{f_{c\_to}}{0.6 \cdot F_{y\_HSS}} = 0.011 \qquad \frac{f_{b\_to\_comp}}{C_A \cdot F_{b\_to}} = 0.696 \qquad \left(\frac{f_{v\_to\_comp}}{F_{v\_to}}\right)^2 = 0.242$$

$Ratio_{c\_combined\_to} = 0.949$ $\quad$ $Check\_1\_to := \begin{cases} \text{"OK"} & \text{if } Ratio_{c\_combined\_to} \le 1 \\ \text{"NOT OK, REDESIGN"} & \text{otherwise} \end{cases}$

Check_1_to = "OK"

Tension, Bending, and Shear: (Sign 5.12.2.2)

$$Ratio_{t\_combined\_to} := \frac{f_{t\_to}}{F_{t\_to}} + \frac{f_{b\_to\_tens}}{F_{b\_to}} + \left(\frac{f_{v\_to\_tens}}{F_{v\_to}}\right)^2$$ (Sign Eq. 5-20)

$$\frac{f_{t\_to}}{F_{t\_to}} = 6.519 \times 10^{-2} \quad \frac{f_{b\_to\_tens}}{F_{b\_to}} = 7.734 \times 10^{-2} \quad \left(\frac{f_{v\_to\_tens}}{F_{v\_to}}\right)^2 = 0.053$$

$Ratio_{t\_combined\_to} = 0.067$ $\quad$ $Check\_2\_to := \begin{cases} \text{"OK"} & \text{if } Ratio_{t\_combined\_to} \le 1.0 \\ \text{"NOT OK, REDESIGN"} & \text{otherwise} \end{cases}$

Check_2_to = "OK"

3.3 Boxed End Analysis

Boxed_End = "L3X3X1/4"

Properties:

$F_{y\_angle} = 36 \cdot ksi$ $\quad$ $F_u = 58 \cdot ksi$ $\quad$ $L_{be} = 5\ ft$

$A_{be} = 1.44 \cdot in^2$ $\quad$ $t_{be} = 0.25 \cdot in$ $\quad$ $b_{be} = 3 \cdot in$ (Longer leg length)

$I_{be} = 1.23 \cdot in^4$ $\quad$ $S_{be} = 0.569 \cdot in^3$ $\quad$ $d_{be} = 3 \cdot in$ (Shorter leg length)

$r_{be} = 0.926 \cdot in$ $\quad$ $J_{be} = 0.031 \cdot in^4$

Demands:

$P_{be\_comp} = 6.167 \cdot kip$ $\quad$ $P_{be\_tens} = 6.167 \cdot kip$

TENSION ANALYSIS: (Sign 5.9)

Applied Tensile Force: $P_{be\_tens} = 6.167 \cdot kip$

Allowable Tensile Force:

$U := 0.85$ (Sign C5.9, for three or more bolts per line in the direction of load. Minimum three bolts per WisDOT Standard Details.)

$d_{bolt\_angles} := 0.75in$ (Diameter of bolt, when angles are connected to gusset plate by bolts. WisDOT Standard Details.)

$d_{bolt\_hole} := d_{bolt\_angles} + \left(\frac{1}{8}\right)in$ $\quad$ $d_{bolt\_hole} = 0.875 \cdot in$

$A_{n\_be} := A_{be} - t_{be} \cdot d_{bolt\_hole}$

$A_{e\_be} := U \cdot A_{n\_be}$ $\quad A_{e\_be} = 1.038 \cdot in^2$

$0.5 \cdot F_u \cdot A_{e\_be} = 30.104 \cdot kip$ $\quad 0.6F_{y\_angle} \cdot A_{be} = 31.104 \cdot kip$

$P_{t\_be\_allow} := \min(0.5 \cdot F_u \cdot A_{e\_be}, 0.6F_{y\_angle} \cdot A_{be})$ $\quad P_{t\_be\_allow} = 30.104 \cdot kip$

Tension Check:

$\frac{P_{be\_tens}}{P_{t\_be\_allow}} = 0.205$ $\quad Check_{t\_be} := if(P_{be\_tens} \le P_{t\_be\_allow}, "OK", "NOT OK")$

$Check_{t\_be} = "OK"$

COMPRESSION ANALYSIS:

Local Buckling:

Noncompact Limit:

(Sign 5.5.4, Table 5-2)

$\lambda_{be} := \frac{b_{be}}{t_{be}}$ $\quad \lambda_{be} = 12$

$\lambda_r := 0.45 \cdot \sqrt{\frac{E}{F_{y\_angle}}}$ $\quad \lambda_r = 12.772$

$Check_{nc\_be} := if(\lambda_{be} \le \lambda_r, "OK", "Section Not Permitted")$

$Check_{nc\_be} = "OK"$

Applied Compressive Sbeess:

$f_{c\_be} := \frac{P_{be\_comp}}{A_{be}}$ $\quad f_{c\_be} = 4.282 \cdot ksi$

Allowable Compressive Sbeess:

(Sign 5.10)

$\frac{L_{be}}{r_{be}} = 64.795$

Effective Slenderness Ratio:

$$KL\_r\_eff_{be} := \begin{cases} 60 + 0.8 \cdot \frac{L_{be}}{r_{be}} & \text{if } 0 \le \frac{L_{be}}{r_{be}} \le 75 \\ 45 + \frac{L_{be}}{r_{be}} & \text{if } \frac{L_{be}}{r_{be}} > 75 \end{cases}$$

(AISC 360-10, E5(b), Single Angle Compression Members, Space beuss)

$KL\_r\_eff_{be} = 111.836$

(The effects of eccentricity on single angle members are permitted to be neglected when using the effective slenderness ratio.)

$C_{c\_be} := \sqrt{2 \cdot \pi^2 \cdot \frac{E}{F_{y\_angle}}}$ $\quad C_{c\_be} = 126.099$ $\quad \chi_{be} := \frac{KL\_r\_eff_{be}}{C_{c\_be}}$ $\quad \chi_{be} = 0.887$

$$F_{c\_be} := \begin{cases} \dfrac{\left(1 - \dfrac{\chi_{be}^2}{2}\right) \cdot F_{y\_angle}}{\dfrac{5}{3} + \dfrac{3}{8}(\chi_{be}) - \dfrac{1}{8}\chi_{be}^3} & \text{if } \chi_{be} < 1 \\ \dfrac{12 \cdot \pi^2 \cdot E}{23 \cdot KL\_r\_eff_{be}^2} & \text{if } \chi_{be} \geq 1 \end{cases}$$

(Sign Eq. 5-9)

(Sign Eq. 5-10)

$F_{c\_be} = 11.423 \cdot ksi$

Compression Check:

$\frac{f_{c\_be}}{F_{c\_be}} = 0.375$ $\quad$ Check_c_be := $\begin{cases} \text{"OK"} & \text{if } \left(\frac{f_{c\_be}}{F_{c\_be}} \leq 1\right) \wedge (\lambda_{be} \leq \lambda_r) \\ \text{"NOT OK"} & \text{otherwise} \end{cases}$

Check_c_be = "OK"

3.4 Transverse Web Analysis

Trans_Web = "L2-1/2X2-1/2X1/4"

Properties:

$F_{y\_angle} = 36 \cdot ksi$ $\quad F_u = 58 \cdot ksi$ $\quad L_{tr} = 6.25\,ft$

$A_{tr} = 1.19 \cdot in^2$ $\quad t_{tr} = 0.25 \cdot in$ $\quad b_{tr} = 2.5 \cdot in$ (Longer leg length)

$I_{tr} = 0.692 \cdot in^4$ $\quad S_{tr} = 0.387 \cdot in^3$ $\quad d_{tr} = 2.5 \cdot in$ (Shorter leg length)

$r_{tr} = 0.764 \cdot in$ $\quad J_{tr} = 0.026 \cdot in^4$

Demands:

$P_{tr\_comp} = 2.969 \cdot kip$ $\quad P_{tr\_tens} = 2.969 \cdot kip$

TENSION ANALYSIS: (Sign 5.9)

Applied Tensile Force: $P_{tr\_tens} = 2.969 \cdot kip$

Allowable Tensile Force:

$U := 0.85$ (Sign C5.9, for three or more bolts per line in the direction of load. Minimum three bolts per WisDOT Standard Details.)

$d_{bolt\_angles} := 0.75in$ (Diameter of bolt, when angles are connected to gusset plate by bolts. WisDOT Standard Details.)

$d_{bolt\_hole} := d_{bolt\_angles} + \left(\frac{1}{8}\right)in$ $\qquad d_{bolt\_hole} = 0.875 \cdot in$

$A_{n\_tr} := A_{tr} - t_{tr} \cdot d_{bolt\_hole}$

$A_{e\_tr} := U \cdot A_{n\_tr}$ $\qquad A_{e\_tr} = 0.826 \cdot in^2$

$0.5 \cdot F_u \cdot A_{e\_tr} = 23.941 \cdot kip$ $\qquad 0.6F_{y\_angle} \cdot A_{tr} = 25.704 \cdot kip$

$P_{t\_tr\_allow} := \min\left(0.5 \cdot F_u \cdot A_{e\_tr}, 0.6F_{y\_angle} \cdot A_{tr}\right)$ $\qquad P_{t\_tr\_allow} = 23.941 \cdot kip$

Tension Check:

$\frac{P_{tr\_tens}}{P_{t\_tr\_allow}} = 0.124$ $\qquad Check_{t\_tr} := if\left(P_{tr\_tens} \le P_{t\_tr\_allow}, \text{"OK"}, \text{"NOT OK"}\right)$

$Check_{t\_tr} = \text{"OK"}$

COMPRESSION ANALYSIS:

Local Buckling:

Noncompact Limit:

(Sign 5.5.4, Table 5-2)

$\lambda_{tr} := \frac{b_{tr}}{t_{tr}}$ $\qquad \lambda_{tr} = 10$

$\lambda_r := 0.45 \cdot \sqrt{\frac{E}{F_{y\_angle}}}$ $\qquad \lambda_r = 12.772$

$Check_{nc\_tr} := if\left(\lambda_{tr} \le \lambda_r, \text{"OK"}, \text{"Section Not Permitted"}\right)$

$Check_{nc\_tr} = \text{"OK"}$

Applied Compressive Stress:

$f_{c\_tr} := \frac{P_{tr\_comp}}{A_{tr}}$ $\qquad f_{c\_tr} = 2.495 \cdot ksi$

Allowable Compressive Stress: (Sign 5.10)

$\frac{L_{tr}}{r_{tr}} = 98.168$

Effective Slenderness Ratio:

$$KL\_r\_eff_{tr} := \begin{cases} 60 + 0.8 \cdot \frac{L_{tr}}{r_{tr}} & \text{if } 0 \le \frac{L_{tr}}{r_{tr}} \le 75 \\ 45 + \frac{L_{tr}}{r_{tr}} & \text{if } \frac{L_{tr}}{r_{tr}} > 75 \end{cases}$$

(AISC 360-10, E5(b), Single Angle Compression Members, Space Truss)

(The effects of eccentricity on single angle

$KL\_r\_eff_{tr} = 143.168$ members are permitted to be neglected when using the effective slenderness ratio.)

$$C_{c\_tr} := \sqrt{2 \cdot \pi^2 \cdot \frac{E}{F_{y\_angle}}} \qquad C_{c\_tr} = 126.099 \qquad \chi_{tr} := \frac{KL\_r\_eff_{tr}}{C_{c\_tr}} \qquad \chi_{tr} = 1.135$$

$$F_{c\_tr} := \begin{cases} \dfrac{\left(1 - \dfrac{\chi_{tr}^2}{2}\right) \cdot F_{y\_angle}}{\dfrac{5}{3} + \dfrac{3}{8}(\chi_{tr}) - \dfrac{1}{8}\chi_{tr}^3} & \text{if } \chi_{tr} < 1 \\ \dfrac{12 \cdot \pi^2 \cdot E}{23 \cdot KL\_r\_eff_{tr}^2} & \text{if } \chi_{tr} \geq 1 \end{cases}$$

(Sign Eq. 5-9)

(Sign Eq. 5-10)

$F_{c\_tr} = 7.286 \cdot ksi$

Compression Check:

$$\frac{f_{c\_tr}}{F_{c\_tr}} = 0.342 \qquad Check\_c\_tr := \begin{cases} \text{"OK"} & \text{if } \left(\dfrac{f_{c\_tr}}{F_{c\_tr}} \leq 1\right) \wedge (\lambda_{tr} \leq \lambda_r) \\ \text{"NOT OK"} & \text{otherwise} \end{cases}$$

Check_c_tr = "OK"

3.5 Front and Rear Web Analysis

Front_Rear_Web = "L3X3X1/4"

Properties:

$F_{y\_angle} = 36 \cdot ksi$ $F_u = 58 \cdot ksi$ $L_{fr} = 7.071\ ft$

$A_{fr} = 1.44 \cdot in^2$ $t_{fr} = 0.25 \cdot in$ $b_{fr} = 3 \cdot in$ (Longer leg length)

$I_{fr} = 1.23 \cdot in^4$ $S_{fr} = 0.569 \cdot in^3$ $d_{fr} = 3 \cdot in$ (Shorter leg length)

$r_{fr} = 0.926 \cdot in$ $J_{fr} = 0.031 \cdot in^4$

Demands:

$P_{fr\_comp} = 5.365 \cdot kip$ $P_{fr\_tens} = 5.365 \cdot kip$

TENSION ANALYSIS: (Sign 5.9)

Applied Tensile Force: $P_{fr\_tens} = 5.365 \cdot kip$

Allowable Tensile Force:

$U := 0.85$ (Sign C5.9, for three or more bolts per line in the direction of load. Minimum three bolts per WisDOT Standard Details.)

$d_{bolt\_angles} := 0.75in$ (Diameter of bolt, when angles are connected to gusset plate by bolts. WisDOT Standard Details.)

$d_{bolt\_hole} := d_{bolt\_angles} + \left(\frac{1}{8}\right)in$ $\quad d_{bolt\_hole} = 0.875 \cdot in$

$A_{n\_fr} := A_{fr} - t_{fr} \cdot d_{bolt\_hole}$

$A_{e\_fr} := U \cdot A_{n\_fr}$ $\quad A_{e\_fr} = 1.038 \cdot in^2$

$0.5 \cdot F_u \cdot A_{e\_fr} = 30.104 \cdot kip$ $\quad 0.6F_{y\_angle} \cdot A_{fr} = 31.104 \cdot kip$

$P_{t\_fr\_allow} := \min\left(0.5 \cdot F_u \cdot A_{e\_fr}, 0.6F_{y\_angle} \cdot A_{fr}\right)$ $\quad P_{t\_fr\_allow} = 30.104 \cdot kip$

Tension Check:

$\frac{P_{fr\_tens}}{P_{t\_fr\_allow}} = 0.178$ $\quad Check_{t\_fr} := if\left(P_{fr\_tens} \le P_{t\_fr\_allow}, "OK", "NOT\ OK"\right)$

$Check_{t\_fr} = "OK"$

COMPRESSION ANALYSIS:

Local Buckling:

Noncompact Limit: (Sign 5.5.4, Table 5-2)

$\lambda_{fr} := \frac{b_{fr}}{t_{fr}}$ $\quad \lambda_{fr} = 12$

$\lambda_r := 0.45 \cdot \sqrt{\frac{E}{F_{y\_angle}}}$ $\quad \lambda_r = 12.772$

$Check_{nc\_fr} := if\left(\lambda_{fr} \le \lambda_r, "OK", "Section\ Not\ Permitted"\right)$

$Check_{nc\_fr} = "OK"$

Applied Compressive Stress:

$f_{c\_fr} := \frac{P_{fr\_comp}}{A_{fr}}$ $\quad f_{c\_fr} = 3.725 \cdot ksi$

Allowable Compressive Stress: (Sign 5.10)

$\frac{L_{fr}}{r_{fr}} = 91.634$

Effective Slenderness Ratio:

$$KL\_r\_eff_{fr} := \begin{cases} 60 + 0.8 \cdot \dfrac{L_{fr}}{r_{fr}} & \text{if } 0 \le \dfrac{L_{fr}}{r_{fr}} \le 75 \\ 45 + \dfrac{L_{fr}}{r_{fr}} & \text{if } \dfrac{L_{fr}}{r_{fr}} > 75 \end{cases}$$

(AISC 360-10, E5(b), Single Angle Compression Members, Space Truss)

$KL\_r\_eff_{fr} = 136.634$

(The effects of eccentricity on single angle members are permitted to be neglected when using the effective slenderness ratio.)

$$C_{c\_fr} := \sqrt{2 \cdot \pi^2 \cdot \frac{E}{F_{y\_angle}}} \qquad C_{c\_fr} = 126.099 \qquad \chi_{fr} := \frac{KL\_r\_eff_{fr}}{C_{c\_fr}} \qquad \chi_{fr} = 1.084$$

$$F_{c\_fr} := \begin{cases} \dfrac{\left(1 - \dfrac{\chi_{fr}^2}{2}\right) \cdot F_{y\_angle}}{\dfrac{5}{3} + \dfrac{3}{8}(\chi_{fr}) - \dfrac{1}{8}\chi_{fr}^3} & \text{if } \chi_{fr} < 1 \\ \dfrac{12 \cdot \pi^2 \cdot E}{23 \cdot KL\_r\_eff_{fr}^2} & \text{if } \chi_{fr} \ge 1 \end{cases}$$

(Sign Eq. 5-9)

(Sign Eq. 5-10)

$F_{c\_fr} = 7.999 \cdot ksi$

Compression Check:

$$\frac{f_{c\_fr}}{F_{c\_fr}} = 0.466 \qquad Check\_c\_fr := \begin{cases} \text{"OK"} & \text{if } \left(\dfrac{f_{c\_fr}}{F_{c\_fr}} \le 1\right) \wedge (\lambda_{fr} \le \lambda_r) \\ \text{"NOT OK"} & \text{otherwise} \end{cases}$$

$Check\_c\_fr = \text{"OK"}$

3.6 Top and Bottom Web Analysis

$Top\_Bottom\_Web = \text{"L3X3X1/4"}$

Properties:

$F_{y\_angle} = 36 \cdot ksi$ $\quad F_u = 58 \cdot ksi$ $\quad L_{tb} = 6.25\ ft$

$A_{tb} = 1.44 \cdot in^2$ $\quad t_{tb} = 0.25 \cdot in$ $\quad b_{tb} = 3 \cdot in$ (Longer leg length)

$I_{tb} = 1.23 \cdot in^4$ $\quad S_{tb} = 0.569 \cdot in^3$ $\quad d_{tb} = 3 \cdot in$ (Shorter leg length)

$r_{tb} = 0.926 \cdot in$ $\quad J_{tb} = 0.031 \cdot in^4$

Demands:

$P_{tb\_comp} = 7.24 \cdot kip$ $\quad P_{tb\_tens} = 7.24 \cdot kip$

TENSION ANALYSIS: (Sign 5.9)

Applied Tensile Force:

$P_{tb\_tens} = 7.24 \cdot kip$

Allowable Tensile Force:

$U := 0.85$ (Sign C5.9, for three or more bolts per line in the direction of load. Minimum three bolts per WisDOT Standard Details.)

$d_{bolt\_angles} := 0.75in$ (Diameter of bolt, when angles are connected to gusset plate by bolts. WisDOT Standard Details.)

$d_{bolt\_hole} := d_{bolt\_angles} + \left(\frac{1}{8}\right)in$ $\quad d_{bolt\_hole} = 0.875 \cdot in$

$A_{n\_tb} := A_{tb} - t_{tb} \cdot d_{bolt\_hole}$

$A_{e\_tb} := U \cdot A_{n\_tb}$ $\quad A_{e\_tb} = 1.038 \cdot in^2$

$0.5 \cdot F_u \cdot A_{e\_tb} = 30.104 \cdot kip$ $\quad 0.6F_{y\_angle} \cdot A_{tb} = 31.104 \cdot kip$

$P_{t\_tb\_allow} := \min\left(0.5 \cdot F_u \cdot A_{e\_tb}, 0.6F_{y\_angle} \cdot A_{tb}\right)$ $\quad P_{t\_tb\_allow} = 30.104 \cdot kip$

Tension Check:

$\frac{P_{tb\_tens}}{P_{t\_tb\_allow}} = 0.24$ $\quad Check_{t\_tb} := if\left(P_{tb\_tens} \le P_{t\_tb\_allow}, "OK", "NOT\ OK"\right)$

$Check_{t\_tb} = "OK"$

COMPRESSION ANALYSIS:

Local Buckling:

Noncompact Limit: (Sign 5.5.4, Table 5-2)

$\lambda_{tb} := \frac{b_{tb}}{t_{tb}}$ $\quad \lambda_{tb} = 12$

$\lambda_r := 0.45 \cdot \sqrt{\frac{E}{F_{y\_angle}}}$ $\quad \lambda_r = 12.772$

$Check_{nc\_tb} := if\left(\lambda_{tb} \le \lambda_r, "OK", "Section\ Not\ Permitted"\right)$

$Check_{nc\_tb} = "OK"$

Applied Compressive Stress:

$f_{c\_tb} := \frac{P_{tb\_comp}}{A_{tb}}$ $\quad f_{c\_tb} = 5.027 \cdot ksi$

Allowable Compressive Stress: (Sign 5.10)

$\frac{L_{tb}}{r_{tb}} = 80.994$

Effective Slenderness Ratio:

$$KL\_r\_eff_{tb} := \begin{cases} 60 + 0.8 \cdot \dfrac{L_{tb}}{r_{tb}} & \text{if } 0 \le \dfrac{L_{tb}}{r_{tb}} \le 75 \\ 45 + \dfrac{L_{tb}}{r_{tb}} & \text{if } \dfrac{L_{tb}}{r_{tb}} > 75 \end{cases}$$

(AISC 360-10, E5(b), Single Angle Compression Members, Space Truss)

$KL\_r\_eff_{tb} = 125.994$

(The effects of eccentricity on single angle members are permitted to be neglected when using the effective slenderness ratio.)

$$C_{c\_tb} := \sqrt{2 \cdot \pi^2 \cdot \frac{E}{F_{y\_angle}}} \qquad C_{c\_tb} = 126.099 \qquad \chi_{tb} := \frac{KL\_r\_eff_{tb}}{C_{c\_tb}} \qquad \chi_{tb} = 0.999$$

$$F_{c\_tb} := \begin{cases} \dfrac{\left(1 - \dfrac{\chi_{tb}^2}{2}\right) \cdot F_{y\_angle}}{\dfrac{5}{3} + \dfrac{3}{8}(\chi_{tb}) - \dfrac{1}{8}\chi_{tb}^3} & \text{if } \chi_{tb} < 1 \\ \dfrac{12 \cdot \pi^2 \cdot E}{23 \cdot KL\_r\_eff_{tb}^2} & \text{if } \chi_{tb} \ge 1 \end{cases}$$

(Sign Eq. 5-9)

(Sign Eq. 5-10)

$F_{c\_tb} = 9.407 \cdot ksi$

Compression Check:

$$\frac{f_{c\_tb}}{F_{c\_tb}} = 0.534 \qquad Check\_c\_tb := \begin{cases} \text{"OK"} & \text{if } \left(\dfrac{f_{c\_tb}}{F_{c\_tb}} \le 1\right) \wedge (\lambda_{tb} \le \lambda_r) \\ \text{"NOT OK"} & \text{otherwise} \end{cases}$$

Check_c_tb = "OK"

3.7 Tower Web Analysis

Tower_Web = "L4X4X1/2"

Properties:

$F_{y\_angle} = 36 \cdot ksi$ $\quad F_u = 58 \cdot ksi$ $\quad L_{tw} = 7.071\ ft$

$A_{tw} = 3.75 \cdot in^2$ $\quad t_{tw} = 0.5 \cdot in$ $\quad b_{tw} = 4 \cdot in$ (Longer leg length)

$I_{tw} = 5.52 \cdot in^4$ $\quad S_{tw} = 1.96 \cdot in^3$ $\quad d_{tw} = 4 \cdot in$ (Shorter leg length)

$r_{tw} = 1.21 \cdot in$ $\quad J_{tw} = 0.322 \cdot in^4$

Demands:

$P_{tw\_comp} = 0 \cdot kip$ $\quad P_{tw\_tens} = 0 \cdot kip$

TENSION ANALYSIS: (Sign 5.9)

Applied Tensile Force:

$P_{tw\_tens} = 0 \cdot kip$

Allowable Tensile Force:

$U := 0.85$ (Sign C5.9, for three or more bolts per line in the direction of load. Minimum three bolts per WisDOT Standard Details.)

$d_{bolt\_angles} := 0.75in$ (Diameter of bolt, when angles are connected to gusset plate by bolts. WisDOT Standard Details.)

$d_{bolt\_hole} := d_{bolt\_angles} + \left(\frac{1}{8}\right)in$ $\quad d_{bolt\_hole} = 0.875 \cdot in$

$A_{n\_tw} := A_{tw} - t_{tw} \cdot d_{bolt\_hole}$

$A_{e\_tw} := U \cdot A_{n\_tw}$ $\quad A_{e\_tw} = 2.816 \cdot in^2$

$0.5 \cdot F_u \cdot A_{e\_tw} = 81.653 \cdot kip$ $\quad 0.6F_{y\_angle} \cdot A_{tw} = 81 \cdot kip$

$P_{t\_tw\_allow} := \min\left(0.5 \cdot F_u \cdot A_{e\_tw}, 0.6F_{y\_angle} \cdot A_{tw}\right)$ $\quad P_{t\_tw\_allow} = 81 \cdot kip$

Tension Check:

$\frac{P_{tw\_tens}}{P_{t\_tw\_allow}} = 0$ $\quad Check_{t\_tw} := if\left(P_{tw\_tens} \le P_{t\_tw\_allow}, "OK", "NOT\ OK"\right)$

$Check_{t\_tw} = "OK"$

COMPRESSION ANALYSIS:

Local Buckling:

Noncompact Limit: (Sign 5.5.4, Table 5-2)

$\lambda_{tw} := \frac{b_{tw}}{t_{tw}}$ $\quad \lambda_{tw} = 8$

$\lambda_r := 0.45 \cdot \sqrt{\frac{E}{F_{y\_angle}}}$ $\quad \lambda_r = 12.772$

$Check_{nc\_tw} := if\left(\lambda_{tw} \le \lambda_r, "OK", "Section\ Not\ Permitted"\right)$

$Check_{nc\_tw} = "OK"$

Applied Compressive Stress:

$f_{c\_tw} := \frac{P_{tw\_comp}}{A_{tw}}$ $\quad f_{c\_tw} = 0 \cdot ksi$

Allowable Compressive Stress: (Sign 5.10)

$\frac{L_{tw}}{r_{tw}} = 70.126$

Effective Slenderness Ratio:

$$KL\_r\_eff_{tw} := \begin{cases} 72 + 0.75 \cdot \dfrac{L_{tw}}{r_{tw}} & \text{if } 0 \le \dfrac{L_{tw}}{r_{tw}} \le 80 \\ 32 + 1.25 \dfrac{L_{tw}}{r_{tw}} & \text{if } \dfrac{L_{tw}}{r_{tw}} > 75 \end{cases}$$

(AISC 360-10, E5(a), Single Angle Compression Members, Planar Truss)

$$KL\_r\_eff_{tw} = 124.595$$

(The effects of eccentricity on single angle members are permitted to be neglected when using the effective slenderness ratio.)

$$C_{c\_tw} := \sqrt{2 \cdot \pi^2 \cdot \frac{E}{F_{y\_angle}}} \qquad C_{c\_tw} = 126.099 \qquad \chi_{tw} := \frac{KL\_r\_eff_{tw}}{C_{c\_tw}} \qquad \chi_{tw} = 0.988$$

$$F_{c\_tw} := \begin{cases} \dfrac{\left(1 - \dfrac{\chi_{tw}^2}{2}\right) \cdot F_{y\_angle}}{\dfrac{5}{3} + \dfrac{3}{8}(\chi_{tw}) - \dfrac{1}{8}\chi_{tw}^3} & \text{if } \chi_{tw} < 1 \\ \dfrac{12 \cdot \pi^2 \cdot E}{23 \cdot KL\_r\_eff_{tw}^2} & \text{if } \chi_{tw} \ge 1 \end{cases}$$

(Sign Eq. 5-9)

(Sign Eq. 5-10)

$$F_{c\_tw} = 9.614 \cdot ksi$$

Compression Check:

$$\frac{f_{c\_tw}}{F_{c\_tw}} = 0 \qquad Check\_c\_tw := \begin{cases} \text{"OK"} & \text{if } \left(\dfrac{f_{c\_tw}}{F_{c\_tw}} \le 1\right) \wedge (\lambda_{tw} \le \lambda_r) \\ \text{"NOT OK"} & \text{otherwise} \end{cases}$$

Check_c_tw = "OK"

4.0 Connection Design Based on Strength

4.1 Chord Coupling Plate Design

(Not Applicable to a Single-Column Cantilever Sign Truss)

4.2 Weld at Base of Upright

Conservatively ignore stiffners

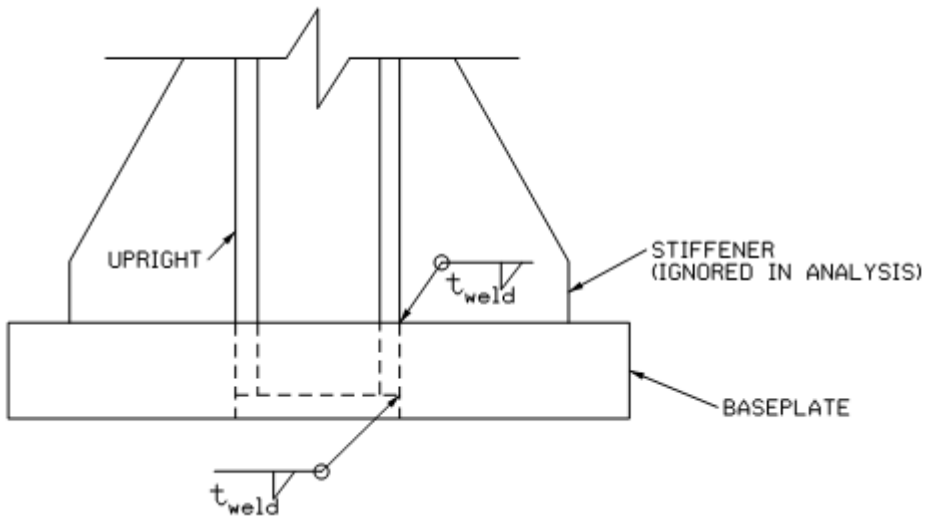

Demands:

$P_{to\_comp} = 7.552 \cdot kip$ $\quad$ $P_{to\_tens} = 4.682 \cdot kip$

$M_{to\_comp} = 218.778 \cdot kip \cdot ft$ $\quad$ $M_{to\_tens} = 2.43 \cdot kip \cdot ft$

Properties:

$F_{EXX} = 70 \cdot ksi$ (Nominal tensile strength of weld metal)

$t_{o\_weld\_bp} := \frac{5}{16} in$ (Fillet weld leg size along the outside of the base plate)

$t_{o\_weld\_bp} = 0.313 \cdot in$ (3/16-inch minimum for a thickness of tube of over 1/4" to 1/2", AISC 14th Table J2.4)

$t_{i\_weld\_bp} := t_{o\_weld\_bp}$ (Fillet weld leg size along the inside of the base plate, WisDOT Standard Details 39.03)

$t_{i\_weld\_bp} = 0.313 \cdot in$

$t_{e\_weld\_bp} := \frac{t_{o\_weld\_bp} + t_{i\_weld\_bp}}{\sqrt{2}}$ (Sum of the effective throats of the outside and inside fillet welds)

$t_{e\_weld\_bp} = 0.442 \cdot in$

$\Omega := 2.00$ (Safety Factor, AISC 14th p. 8-8 and Table J2.5)

$F_{weld} := \frac{0.6 \cdot F_{EXX}}{\Omega}$ $\quad$ $F_{weld} = 21 \cdot ksi$ (Allowable shear stress of weld metal)

$\pi D_{to} = 62.832 \cdot in$ (Length of weld)

$A_{weld\_bp} := (\pi \cdot D_{to}) \cdot t_{e\_weld\_bp}$ $\quad$ $A_{weld\_bp} = 27.768 \cdot in^2$

$r_{weld\_bp} := \frac{D_{to}}{2}$ $\quad$ $r_{weld\_bp} = 10 \cdot in$ (Average radius of the outside and inside welds)

$S_{weld\_bp} := \pi \cdot r_{weld\_bp}^2 \cdot t_{e\_weld\_bp}$ $\quad$ $S_{weld\_bp} = 138.84 \cdot in^3$

$$f_{weld\_bp\_1} := \frac{P_{to\_comp}}{A_{weld\_bp}} + \frac{M_{to\_comp}}{S_{weld\_bp}}$$

$$\frac{P_{to\_comp}}{A_{weld\_bp}} = 0.272 \cdot ksi \qquad \frac{M_{to\_comp}}{S_{weld\_bp}} = 18.909 \cdot ksi$$

$$f_{weld\_bp\_1} = 19.181 \cdot ksi$$

$$f_{weld\_bp\_2} := \frac{P_{to\_tens}}{A_{weld\_bp}} + \frac{M_{to\_tens}}{S_{weld\_bp}}$$

$$\frac{P_{to\_tens}}{A_{weld\_bp}} = 0.169 \cdot ksi \qquad \frac{M_{to\_tens}}{S_{weld\_bp}} = 0.21 \cdot ksi$$

$$f_{weld\_bp\_2} = 0.379 \cdot ksi$$

$$f_{weld\_bp} := \max(f_{weld\_bp\_1}, f_{weld\_bp\_2})$$

$$f_{weld\_bp} = 19.181 \cdot ksi$$

$$\frac{f_{weld\_bp}}{F_{weld}} = 0.913 \qquad Check_{P\_M\_weld\_bp} := \text{if}\left(\frac{f_{weld\_bp}}{F_{weld}} \le 1, \text{"OK"}, \text{"NOT OK"}\right)$$

$$Check_{P\_M\_weld\_bp} = \text{"OK"}$$

4.3 Anchor Bolts at Base Plate

Anchor Bolts with a bolt circle diameter equal to D_{to} + 6" (WisDOT Standard Detail 39.03)

$N_{ab\_bp} := 8$

$r_{BG\_bp} := \frac{D_{to} + 6in}{2}$

(ab: anchor bolt
bp: baseplate)

$d_{bolts\_bp} := 2.00in$

$t_{base\_plate} := 2in$

"If the base plate thickness is equal to [at least] the anchor bolt diameter,... prying effects may be neglected." (Sign C5.17.3)

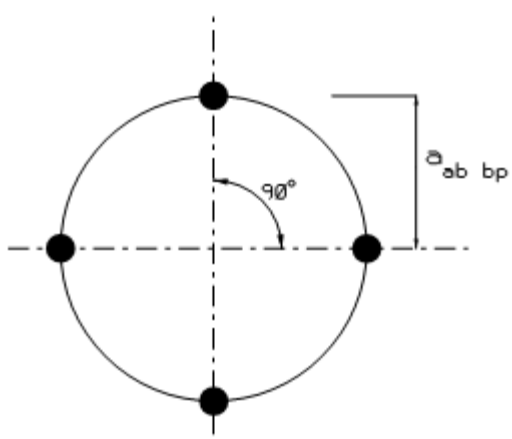

$n_{bp} = 4.5$ (Number of threads per inch)

$$\alpha_{ab\_bp} := \frac{360deg}{N_{ab\_bp}}$$

$$\alpha_{ab\_bp} = 45 \cdot deg$$

$$\alpha_{ab\_bp} = 0.785 \quad \text{(radian)}$$

Tensile Stress Area:

$$A_{ab\_bp} := \frac{\pi}{4} \cdot \left(d_{bolts\_bp} - \frac{0.9743in}{n_{bp}} \right)^2$$

(Sign Eq. 5-23)

(Tensile Area of one anchor bolt)

$$A_{ab\_bp} = 2.498 \cdot in^2$$

$$A_{BG\_bp} := N_{ab\_bp} \cdot A_{ab\_bp}$$

(Total tensile area of all anchor bolts)

$$A_{BG\_bp} = 19.986 \cdot in^2$$

Section Modulus of Bolt Group:

$$a_{ab\_bp} := r_{BG\_bp}$$

$$b_{ab\_bp} := r_{BG\_bp} \cdot \cos(\alpha_{ab\_bp})$$

$$a_{ab\_bp} = 13 \cdot in$$

$$b_{ab\_bp} = 9.192 \cdot in$$

$$c_{ab\_bp} := \begin{cases} (r_{BG\_bp} \cdot \cos(2\alpha_{ab\_bp})) & \text{if } N_{ab\_bp} \geq 8 \\ 0 & \text{otherwise} \end{cases}$$

$$c_{ab\_bp} = 0 \cdot in$$

$$I_{BG\_bp} := A_{ab\_bp} \cdot \left(a_{ab\_bp}^2 + 2 \cdot b_{ab\_bp}^2 + 2 \cdot c_{ab\_bp}^2 \right) \cdot 2$$

(This formula can accomodate up to 12 bolts.)

$$I_{BG\_bp} = 1.689 \times 10^3 \cdot in^4$$

$$S_{BG\_bp} := \frac{I_{BG\_bp}}{a_{ab\_bp}}$$

(This formula can accomodate up to 12 bolts.)

$$S_{BG\_bp} = 129.907 \cdot in^3$$

$$J_{BG\_bp} := N_{ab\_bp} \cdot A_{ab\_bp} \cdot \left(\frac{D_{to}}{2} \right)^2$$

(Polar moment of inertia of anchor bolt group)

$$J_{BG\_bp} = 1.999 \times 10^3 \cdot in^4$$

Demands:

$$M_{to\_comp} = 2.625 \times 10^3 \cdot kip \cdot in$$

$$M_{to\_tens} = 29.155 \cdot kip \cdot in$$

$V_{to\_comp} = 7.491 \cdot kip$

$Torque_{to\_comp} = 1.711 \times 10^3 \cdot kip \cdot in$

$My_{to\_comp} = 2.334 \times 10^3 \cdot kip \cdot in$

$Mz_{to\_comp} = 1.202 \times 10^3 \cdot kip \cdot in$

$V_{to\_tens} = 12.18 \cdot kip$

$Torque_{to\_tens} = 633.75 \cdot kip \cdot in$

$My_{to\_tens} = 15 \cdot kip \cdot in$

$Mz_{to\_tens} = 25 \cdot kip \cdot in$

Anchor Bolt Stresses:

Maximum axial stress applied to an anchor bolt:

From compressive force and its associated moments:

$$\frac{P_{to\_comp}}{A_{BG\_bp}} = 0.378 \cdot ksi \qquad \frac{M_{to\_comp}}{S_{BG\_bp}} = 20.209 \cdot ksi$$

$$f_{c\_ab} := \frac{P_{to\_comp}}{A_{BG\_bp}} + \frac{M_{to\_comp}}{S_{BG\_bp}}$$

$$f_{c\_ab} = 20.587 \cdot ksi$$

From tensile force and its associated moments:

$$\frac{P_{to\_tens}}{A_{BG\_bp}} = 0.234 \cdot ksi \qquad \frac{M_{to\_tens}}{S_{BG\_bp}} = 0.224 \cdot ksi$$

$$f_{t\_ab} := \frac{P_{to\_tens}}{A_{BG\_bp}} + \frac{M_{to\_tens}}{S_{BG\_bp}}$$

$$f_{t\_ab} = 0.459 \cdot ksi$$

Maximum shear stress applied to an anchor bolt:

$$f_{v\_ab\_comp} := \frac{V_{to\_comp}}{N_{ab\_bp} \cdot A_{ab\_bp}} + \frac{Torque_{to\_comp} \cdot r_{BG\_bp}}{J_{BG\_bp}}$$

$$\frac{V_{to\_comp}}{N_{ab\_bp} \cdot A_{ab\_bp}} = 0.375 \cdot ksi \qquad \frac{Torque_{to\_comp} \cdot r_{BG\_bp}}{J_{BG\_bp}} = 11.131 \cdot ksi$$

$$f_{v\_ab\_comp} = 11.506 \cdot ksi$$

$$f_{v\_ab\_tens} := \frac{V_{to\_tens}}{N_{ab\_bp} \cdot A_{ab\_bp}} + \frac{Torque_{to\_tens} \cdot r_{BG\_bp}}{J_{BG\_bp}}$$

$$\frac{V_{to\_tens}}{N_{ab\_bp} \cdot A_{ab\_bp}} = 0.609 \cdot ksi \qquad \frac{Torque_{to\_tens} \cdot r_{BG\_bp}}{J_{BG\_bp}} = 4.122 \cdot ksi$$

$$f_{v\_ab\_tens} = 4.732 \cdot ksi$$

Allowable Anchor Bolt Stresses:

$F_{y\_ab} := 55ksi$ (Grade 55 Bolts, WisDOT Standard Details)

Tensile stress

$F_{t\_ab} := 0.50 \cdot F_{y\_ab}$ $\qquad F_{t\_ab} = 27.5 \cdot ksi$ (Sign Eq. 5-21a)

Compressive stress

$F_{c\_ab} := 0.60 \cdot F_{y\_ab}$ $\quad F_{c\_ab} = 33 \cdot ksi$ (Sign Eq. 5-21b)

Shear stress

$F_{v\_ab} := 0.30 \cdot F_{y\_ab}$ $\quad F_{v\_ab} = 16.5 \cdot ksi$ (Sign Eq. 5-22)

Anchor Bolt Stress Check:

$$Check_{ab\_1} := if\left[\left(\frac{f_{v\_ab\_tens}}{F_{v\_ab}}\right)^2 + \left(\frac{f_{t\_ab}}{F_{t\_ab}}\right)^2 \le 1, "OK", "NOT\ OK"\right]$$ (Sign Eq. 5-24)

$$\left(\frac{f_{v\_ab\_tens}}{F_{v\_ab}}\right)^2 = 0.082 \qquad \left(\frac{f_{t\_ab}}{F_{t\_ab}}\right)^2 = 2.782 \times 10^{-4}$$

$$\left(\frac{f_{v\_ab\_tens}}{F_{v\_ab}}\right)^2 + \left(\frac{f_{t\_ab}}{F_{t\_ab}}\right)^2 = 0.083$$

$Check_{ab\_1} = "OK"$

$$Check_{ab\_2} := if\left[\left(\frac{f_{v\_ab\_comp}}{F_{v\_ab}}\right)^2 + \left(\frac{f_{c\_ab}}{F_{c\_ab}}\right)^2 \le 1, "OK", "NOT\ OK"\right]$$ (Sign Eq. 5-25)

$$\left(\frac{f_{v\_ab\_comp}}{F_{v\_ab}}\right)^2 = 0.486 \qquad \left(\frac{f_{c\_ab}}{F_{c\_ab}}\right)^2 = 0.389$$

$$\left(\frac{f_{v\_ab\_comp}}{F_{v\_ab}}\right)^2 + \left(\frac{f_{c\_ab}}{F_{c\_ab}}\right)^2 = 0.875$$

$Check_{ab\_2} = "OK"$

4.4 Base Plate Thickness Check

Check Base Plate Thickness to Carry Tensile and Bending Forces:

$p_{bp} := \frac{\pi \cdot D_{to}}{N_{ab\_bp}}$ $\quad p_{bp} = 7.854 \cdot in$ (Tributary perimeter of tower per bolt)

$g_{o\_bp} := r_{BG\_bp} - \frac{D_{to}}{2}$ (Moment arm, from bolt to outside face of tower)

$g_{o\_bp} = 3 \cdot in$

$$T_{bolt\_bp} := \frac{P_{to\_tens}}{N_{ab\_bp}} + \frac{M_{to\_tens}}{S_{BG\_bp}} \cdot A_{ab\_bp}$$

(Maximum applied tensile force of a bolt.)

$$\frac{P_{to\_tens}}{N_{ab\_bp}} = 0.585 \cdot kip \qquad \frac{M_{to\_tens}}{S_{BG\_bp}} \cdot A_{ab\_bp} = 0.561 \cdot kip$$

$$T_{bolt\_bp} = 1.146 \cdot kip$$

$$C_{bolt\_bp} := \frac{P_{to\_comp}}{N_{ab\_bp}} + \left(\frac{M_{to\_comp}}{S_{BG\_bp}}\right) \cdot A_{ab\_bp}$$

(Maximum applied compressive force of a bolt.)

$$\frac{P_{to\_comp}}{N_{ab\_bp}} = 0.944 \cdot kip \qquad \left(\frac{M_{to\_comp}}{S_{BG\_bp}}\right) \cdot A_{ab\_bp} = 50.487 \cdot kip$$

$$C_{bolt\_bp} = 51.431 \cdot kip$$

$$P_{bolt\_bp} := \max\left(T_{bolt\_bp}, C_{bolt\_bp}\right)$$

(Maximum applied axial force of a bolt.)

$$P_{bolt\_bp} = 51.431 \cdot kip$$

$$M_{bp\_bolt} := P_{bolt\_bp} \cdot g_{o\_bp}$$

(Moment at the junction of base plate and tower resulting from tensile force from one bolt)

$$M_{bp\_bolt} = 154.293 \cdot kip \cdot in$$

$$S_{bp} := \frac{p_{bp} \cdot t_{base\_plate}^{2}}{6} \qquad S_{bp} = 5.236 \cdot in^{3}$$

S = (bh^2)/6
b = p
h = thickness of plate

$$f_{b\_bp} := \frac{M_{bp\_bolt}}{S_{bp}} \qquad f_{b\_bp} = 29.468 \cdot ksi$$

$$F_{b\_bp} := 0.75 F_{y\_plate} \qquad F_{b\_bp} = 27 \cdot ksi$$

(Sign 5.8, Eq. 5-8)

$$\frac{f_{b\_bp}}{F_{b\_bp}} = 1.091 \qquad Check_{b\_bp} := \text{if}\left(f_{b\_bp} \le F_{b\_bp}, \text{"OK"}, \text{"NOT OK"}\right)$$

$Check_{b\_bp}$ = "NOT OK"

This check does not consider stiffener contributions. Plate thickness OK.

5.0 Fatigue Analysis

5.1 Galloping

(Not Applicable to a WisDOT 4-Chord Single-Column Cantilever Sign Truss)

"Overhead cantilevered sign and traffic signal support structures shall be designed for galloping-induced cyclic loads by applying an equivalent static shear pressure vertically to the surface area... of all sign panels... mounted to the cantilevered horizontal support" (Sign 11.7.1).

Noncantilevered sign structures are not susceptible to this type of loading (Sign Table 11-1).

Equivalent Static Shear Pressure:

$P_G := 21 \cdot I_F$ (Sign Eq. 11-1)

$I_F := 1.0$ Fatigue Importance Factor for Galloping for Cateroty I Sign Support Structure (Sign 11.6, Table 11-1)

Equivalent Static Galloping Shear Pressure:

$P_G := 21 \cdot I_F \cdot psf$ $P_G = 21 \frac{lb}{ft^2}$

Galloping Load on Sign:

$D_{sign} = 17.867\,ft$ (Design sign depth)

$V_{G\_sign} := P_G \cdot D_{sign} \cdot L_{web\_section}$ (Vertical wind load on the sign panel per design section of truss)

$V_{G\_sign} = 1.876 \times 10^3\,lb$

$V_{G\_sign\_node} := \frac{V_{G\_sign}}{2}$ (Vertical force applied to each node, evenly distributed between top and bottom chord node locations)

$V_{G\_sign\_node} = 938\,lb$

$e_{sign} := 2in + 5in + \frac{D_{ch}}{2}$ (Eccentricity of sign load from C/L of chord)

(Thickness of sign panel + Depth of sign support bracket + Radius of chord)

$e_{sign} = 9.25 \cdot in$

$H_{G\_sign\_node} := \frac{V_{G\_sign} \cdot e_{sign}}{d_{truss}}$

$H_{G\_sign\_node} = 289.217\,lb$ (Horizontal force on chord node due to eccentricity)

5.2 Vortex Shedding

Vortex shedding needs to be considered in the design of high-level, high-mast lighting structures, not sign structures. (Sign Table 11-1 & 11.7.2)

5.3 Natural Wind Gust

Equivalent Static Natural Wind Gust Pressure Range:

$P_{NWG} := 5.2 \cdot C_d \cdot I_F$ (Sign Eq. 11-5)

$I_F := 1.0$ Fatigue Importance Factor for Natural Wind Gust for Cateroty I Sign Support Structure (Sign 11.6, Table 11-1)

C_d Drag Coefficient, varies by element type. (Sign Table 3-6)

$V_{NWG} := 11mph$ Yearly mean wind velocity (Sign 11.7.3)

Velocity Conversion Factor: (Sign Table 3-4)

$C_v = 1$ (For Recurrence Interval of 50 Years)

Chord Members: Cylindrical. Apply wind load to both front and rear chords.

$C_v \cdot V_{NWG} \cdot D_{ch} = 4.125 \cdot mph \cdot ft$ (Sign Table 3-6)

$$C_{d\_ch\_NWG} := \begin{cases} 1.10 & \text{if } C_v \cdot V_{NWG} \cdot D_{ch} \le 39 mph \cdot ft \\ \left[\dfrac{129}{\left(C_v \cdot V_{NWG} \cdot D_{ch} \cdot \dfrac{1}{mph \cdot ft}\right)^{1.3}}\right] & \text{if } 39 mph \cdot ft < C_v \cdot V_{NWG} \cdot D_{ch} < 78 mph \cdot ft \\ 0.45 & \text{otherwise} \end{cases}$$

$C_{d\_ch\_NWG} = 1.1$

Tower Members: Cylindrical. Apply wind load to both front and rear columns.

$C_v \cdot V_{NWG} \cdot D_{to} = 18.333 \cdot mph \cdot ft$ (Sign Table 3-6)

$$C_{d\_to\_NWG} := \begin{cases} 1.10 & \text{if } C_v \cdot V_{NWG} \cdot D_{to} \le 39 mph \cdot ft \\ \left[\dfrac{129}{\left(C_v \cdot V_{NWG} \cdot D_{to} \cdot \dfrac{1}{mph \cdot ft}\right)^{1.3}}\right] & \text{if } 39 mph \cdot ft < C_v \cdot V_{NWG} \cdot D_{to} < 78 mph \cdot ft \\ 0.45 & \text{otherwise} \end{cases}$$

$C_{d\_to\_NWG} = 1.1$

Angle Members:

Apply wind load to both front and rear members.

$C_{d\_flat} = 1.7$ (Flat member, including plates and angles)

Catwalk Side (Toe & Heel) Plates:

$C_{d\_flat} = 1.7$ (Flat member)

Sign:

$C_{d\_sign} = 1.2$ (Conservative. For L_{sign}/W_{sign} of up to 5.)

Equivalent Static Natural Wind Gust Pressure Range for Drag Coefficient C_d of 1.0:

$P_{NWG\_0} := 5.2 \cdot (1.0) \cdot I_F \cdot psf$ $\quad P_{NWG\_0} = 5.2 \dfrac{lb}{ft^2}$

Natural Wind Gust Load:

Truss Members: Distributed wind load per linear foot of member:

Chord Members: $w_{NWG\_chord} := P_{NWG\_0} \cdot C_{d\_ch\_NWG} \cdot D_{ch}$ $w_{NWG\_chord} = 2.145 \frac{lb}{ft}$

Tower Columns: $w_{NWG\_tower} := P_{NWG\_0} \cdot C_{d\_to\_NWG} \cdot D_{to}$ $w_{NWG\_tower} = 9.533 \frac{lb}{ft}$

Boxed End Members: $w_{NWG\_be} := P_{NWG\_0} \cdot C_{d\_flat} \cdot b_{be}$ $w_{NWG\_be} = 2.21 \frac{lb}{ft}$

(In the AISC Shapes Database, b is the longer leg length of angle.)

Transverse Web Members: $w_{NWG\_tr} := P_{NWG\_0} \cdot C_{d\_flat} \cdot b_{tr} \cdot \left(\frac{d_{truss}}{L_{tr}} \right)$

$w_{NWG\_tr} = 1.473 \frac{lb}{ft}$

$\frac{d_{truss}}{L_{tr}}$ = Ratio of the length of member projected on a vertical plane parallel to sign faces to the actual length of member.

Top and Bottom Web Members: $w_{NWG\_tb} := \left(P_{NWG\_0} \cdot C_{d\_flat} \cdot b_{tb}\right) \cdot 0$ $w_{NWG\_tb} = 0$

(Top and bottom web members are shielded by the chords.)

Front and Rear Web Members: $w_{NWG\_fr} := P_{NWG\_0} \cdot C_{d\_flat} \cdot b_{fr}$ $w_{NWG\_fr} = 2.21 \frac{lb}{ft}$

Tower Web Web Members: $w_{NWG\_tw} := \left(P_{NWG\_0} \cdot C_{d\_flat} \cdot b_{tb}\right) \cdot 0$ $w_{NWG\_tw} = 0$

(Tower web members are shielded by the tower columns.)

Sign:

Sign Configuration:

$w_{NWG\_sg} := P_{NWG\_0} \cdot C_{d\_sigr}$ $w_{NWG\_sg} = 6.24 \cdot psf$ (Wind pressure on sign panel)

$A_{sg} := D_{sign} \cdot L_{web\_section}$ $A_{sg} = 89.333\, ft^2$ $w_{NWG\_sg} \cdot A_{sg} = 0.557 \cdot kip$

$H_{NWG\_sign\_node} := \frac{w_{NWG\_sg} \cdot A_{sg}}{2}$ $H_{NWG\_sign\_node} = 278.72 \cdot lb$

(Force to apply to each top and bottom chord node.)

Catwalk:

$d_{sideplate} = 6 \cdot in$ (Depth of catwalk side (toe & heel) plates)

$P_{NWG\_catwalk} := 0$

(Wind force on the two catwalk side plates per design section, increased 30% to account for the wind load on exposed vertical support brackets, future lights, etc.)

$P_{NWG\_catwalk} = 0$

Equivalent Wind Load Derivation:

$$H_{NWG\_catwalk\_node\_centered} := \frac{P_{NWG\_catwalk}}{2}$$

$$H_{NWG\_catwalk\_node\_centered} = 0$$

$d_{catwalk\_to\_CL\_truss} = 8\,ft$ (Eccentricity of horizontal force on catwalk from C/L truss)

$$H_{NWG\_catwalk\_node\_eccentric} := \frac{P_{NWG\_catwalk} \cdot d_{catwalk\_to\_CL\_truss}}{d_{truss}}$$

$$H_{NWG\_catwalk\_node\_eccentric} = 0$$

$$H_{NWG\_catwalk\_top\_node} := H_{NWG\_catwalk\_node\_centered} - H_{NWG\_catwalk\_node\_eccentric}$$

$$H_{NWG\_catwalk\_top\_node} = 0$$

$$H_{NWG\_catwalk\_bottom\_node} := H_{NWG\_catwalk\_node\_centered} + H_{NWG\_catwalk\_node\_eccentric}$$

$$H_{NWG\_catwalk\_bottom\_node} = 0 \cdot lb$$

Summary of Equivalent Natural Wind Load on Sign and Catwalk:

$$H_{NWG\_top\_node} := H_{NWG\_sign\_node}$$

$$H_{NWG\_top\_node} = 278.72\,lb$$

$$H_{NWG\_bottom\_node} := H_{NWG\_sign\_node}$$

$$H_{NWG\_bottom\_node} = 278.72\,lb$$

5.4 Truck-Induced Gust

An equivalent static truck gust pressure range is applied in the vertical direction along any 12-ft length to create the maximum stress range, excluding any portion of structure not located directly above a traffic lane (Sign 11.7.4)

Equivalent Static Truck Gust Pressure Range:

$$P_{TG} := 18.8 \cdot C_d \cdot I_F$$ (Sign Eq. 11-6)

$I_F := 1.0$	Fatigue Importance Factor for Truck-Induced Gust for Cateroty I Sign Support Structure	(Sign 11.6, Table 11-1)
C_d	Drag Coefficient, varies by element type.	(Sign Table 3-6)

$V_{TG} := 65mph$ (Default truck speed) (Sign 11.7.4)

Velocity Conversion Factor: (Sign Table 3-4)

$C_v = 1$ (For Recurrence Interval of 50 Years)

Note:
Truck gust is not applicable to tower columns and tower web members, because they are not located directly above a traffic lane.

Chord Members: Cylindrical. Apply wind load to both bottom and top chords.

$C_v \cdot V_{TG} \cdot D_{ch} = 24.375 \cdot mph \cdot ft$ (Sign Table 3-6)

$$C_{d\_ch\_TG} := \begin{cases} 1.10 & \text{if } C_v \cdot V_{TG} \cdot D_{ch} \le 39mph \cdot ft \\ \left[\dfrac{129}{\left(C_v \cdot V_{TG} \cdot D_{ch} \cdot \dfrac{1}{mph \cdot ft}\right)^{1.3}}\right] & \text{if } 39mph \cdot ft < C_v \cdot V_{TG} \cdot D_{ch} < 78mph \cdot ft \\ 0.45 & \text{otherwise} \end{cases}$$

$C_{d\_ch\_TG} = 1.1$

Angle Members:

Apply wind load to both front and rear members.

$C_{d\_flat} = 1.7$ (Flat member, including plates and angles)

Catwalk Side (Toe & Heel) Plates:

$C_{d\_flat} = 1.7$ (Flat member)

Sign (the area projected on a horizontal plane):

$C_{d\_sign\_TG} := 2.0$ (Flat with sign panel extrusions one above the other.)

Equivalent Static Truck Gust Pressure Range for Drag Coefficient C_d of 1.0:

$P_{TG\_0} := 18.8 \cdot (1.0) \cdot I_F \cdot psf$ $\quad P_{TG\_0} = 18.8 \dfrac{lb}{ft^2}$

Truck Gust Load:

Truss Members:

Distributed vertical wind load per linear foot of member:

Chord Members: $w_{TG\_chord} := P_{TG\_0} \cdot C_{d\_ch\_TG} \cdot D_{ch}$ $\quad w_{TG\_chord} = 7.755 \dfrac{lb}{ft}$

Boxed End Members: $w_{TG\_be} := P_{TG\_0} \cdot C_{d\_flat} \cdot b_{be}$ $\quad w_{TG\_be} = 7.99 \dfrac{lb}{ft}$

(In the AISC Shapes Database, b is the longer leg length of angle.)

Transverse Web Members: $w_{TG\_tr} := \dfrac{P_{TG\_0} \cdot C_{d\_flat} \cdot b_{tr}}{\sqrt{2}}$ $\quad w_{TG\_tr} = 4.708 \dfrac{lb}{ft}$

$\sqrt{2}$ = Ratio of the actual length of member to the length of member projected on a horizontal plane.

Top and Bottom Web Members: $w_{TG\_tb} := P_{TG\_0} \cdot C_{d\_flat} \cdot b_{tb}$ $\quad w_{TG\_tb} = 7.99 \frac{lb}{ft}$

Front and Rear Web Members: $w_{TG\_fr} := \left(P_{TG\_0} \cdot C_{d\_flat} \cdot b_{fr}\right) \cdot 0$ $\quad w_{TG\_fr} = 0$

(Front and rear web members are shielded by the chords.)

Derivation of Equivalent Truck Gust Loads on Sign Panel and Catwalk:

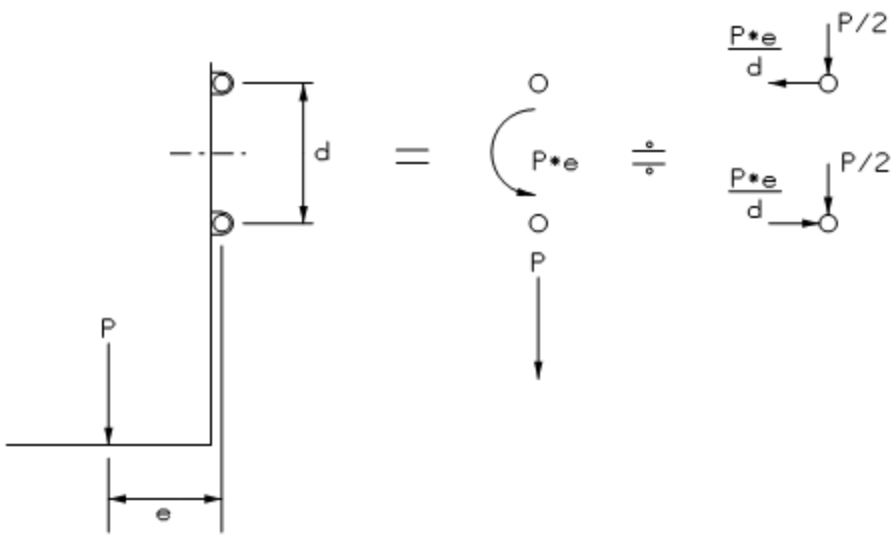

Sign:

Sign Configuration:

$t_{sign} := 2in$ (Thickness of sign panel per Plate No. A5-2.9 "Aluminum Extrusions for Type I Signs" of the Wisconsin Sign Plate Manual.)

$V_{TG\_sign} := \left(P_{TG\_0} \cdot C_{d\_sign\_TG} \cdot t_{sign}\right) \cdot L_{web\_section}$

$V_{TG\_sign} = 31.333\,lb$ (Vertical wind load on the horizontally projected area of sign panel per design section of truss)

$V_{TG\_sign\_node} := \frac{V_{TG\_sign}}{2}$ (Vertical force applied to each node, evenly distributed between top and bottom chord node locations)

$V_{TG\_sign\_node} = 15.667\,lb$

$e_{sign} := 2in + 5in + \frac{D_{ch}}{2}$ (Eccentricity of sign load from C/L of chord)

(Thickness of sign panel + Depth of sign support bracket + Radius of chord)

$e_{sign} = 9.25 \cdot in$

$$H_{TG\_sign\_node} := \frac{V_{TG\_sign} \cdot e_{sign}}{d_{truss}}$$

$H_{TG\_sign\_node} = 4.831\ lb$ (Horizontal force on chord node due to eccentricity)

Catwalk:

$b_{walkway} := 2ft + 3in$ (Width of catwalk)

$b_{walkway} = 2.25\ ft$

$V_{TG\_catwalk} := 0$

(Vertical wind force on the catwalk walkway per design section, increased 30% to account for the wind load on exposed horizontal support brackets, future lights, etc.)

$V_{TG\_catwalk} = 0$

$$e_{catwalk} := \left[\frac{(2ft + 3in)}{2} + 8in\right] + 5in + \frac{D_{ch}}{2}$$ $e_{catwalk} = 28.75 \cdot in$

(C/L of catwalk to vertical support + Depth of vertical support + Radius of chord)

Vertical catwalk loading to apply to each chord node:

$$V_{TG\_catwalk\_node} := \frac{V_{TG\_catwalk}}{2}$$

$V_{TG\_catwalk\_node} = 0$

$$H_{TG\_catwalk\_node} := \frac{V_{TG\_catwalk} \cdot e_{catwalk}}{d_{truss}}$$

$H_{TG\_catwalk\_node} = 0$

<u>Summary of Equivalent Truck Gust Load on Sign and Catwalk:</u>

$V_{TG\_node} := V_{TG\_sign\_node}$

$V_{TG\_node} = 15.667\ lb$

$H_{TG\_node} := H_{TG\_sign\_node}$

$H_{TG\_node} = 4.831\ lb$

5.5 Summary of Applied Fatigue Loads

Table 5.1

Disributed Loads to Apply to Each Member

	Fatigue Loads	
	Natural Wind (lb/ft)	**Truck-Induced* (lb/ft)**
Element	Horizontal	Vertical
Chord	2.15	7.76
Tower	9.53	0.00
Boxed End	2.21	7.99
Transverse Web	1.47	4.71
Front & Rear Web	2.21	0.00
Top & Bottom Web	0.00	7.99
Tower Web	0.00	0.00

* Applied along any 12-ft length, excluding any portion of structure not located directly above a traffic lane.

Table 5.2

Point Loads to Apply to Chord Nodes Where Design Sign is Hung

	Fatigue Loads				
	Galloping* (lb)		**Natural Wind (lb)**	**Truck-Induced** (lb)**	
Element	Vertical	Horizontal	Horizontal	Vertical	Horizontal
Sign, Top Node	938	-289	279	16	-5
Sign, Bottom Node	938	289	279	16	5
Catwalk, Top Node	0	0	0	0	0
Catwalk, Bottom Node	0	0	0	0	0
Top Node Σ	938	-289	279	16	-5
Bottom Node Σ	938	289	279	16	5

* Apply to a cantilevered sign structure, not to a noncantilevered sign structure.

** Apply along any 12-ft length, excluding any portion of structure not located directly above a traffic lane.

Load Combinations Used in RISA-3D for Fatigue Analysis:

IV(a1): Natural Wind Gust (1.0N+0.2T)
IV(a1): Natural Wind Gust (-1.0N+0.2T)
IV(b1): Natural Wind Gust (0.6N+0.3T)
IV(b2): Natural Wind Gust (-0.6N+0.3T)

Notes:

N: Normal component of Basic Load of Natural Wind Gust (Sign 3.9.3, Figure 3-3)
T: Transverse component of Basic Load of Natural Wind Gust (Sign 3.9.3, Figure 3-3)

5.6 Summary of RISA-3D Fatigue Load Output

For Fatigue Analysis, second-order effects are not applicable/considered.
The applied fatigue loads in RISA-3D are not multiplied by a factor of 1.45, and the fatigue output results are not divided by a factor of 1.45.
The factor 1.33 was not used either.

Handhole placed 1'-6" from bottom of base plate (WisDOT Standard Detail 39.02)
From RISA-3D, retrieve M_y and M_z at the location of the tower hand hole.
Use a height of 14" from the bottom of tower to the bottom of hand hole.

From RISA-3D, retrieve M_y and M_z at the location of the termination of the stiffeners.

$h_{stiff} := 14 \cdot in$ (stiffener height)

Table 5.3

Element	Maximum Demands* P (kip)	V_y (kip)	V_z (kip)	M_y (k-ft)	M_z (k-ft)	T (k-ft)	Load Comb.	Location
Chord	6.99	0.74	1.38	0.15	0.10	0.00	IV(a1)	Bottom Rear Chord
Tower	0.00	0.46	2.28	57.33	11.34	42.40	IV(a1)	Base of the Column
Top of Stiffener	0.00	0.46	2.28	54.65	10.80	42.40	IV(a1)	Base of the Column
Bottom of Hand Hole	0.00	0.46	2.28	55.04	10.87	41.45	IV(a1)	Base of the Column
Boxed End	0.39	0.00	0.00	0.00	0.00	0.00	IV(a2)	Front next to Column
Transverse Web	0.46	0.00	0.00	0.00	0.00	0.00	IV(a1)	Next to Column
F/R Web	0.33	0.00	0.00	0.00	0.00	0.00	IV(a1)	Front next to Column
T/B Web	2.10	0.00	0.00	0.00	0.00	0.00	IV(a1)	Bottom next to Column
Tower Web	0.00	0.00	0.00	0.00	0.00	0.00	IV(a1)	

* The combination of forces and moments that causes the maximum stress in a member set, regardless of whether the combined stress is compressive stress or tensile stress.

5.7 Stress Range Calculations

Constant Amplitude Fatigue Limits (CAFL) for Steel: (Sign 11.9, Table 11-3)

$CAFL_A := 24ksi$ $CAFL_D := 7ksi$ $CAFL_{K2} := 1.0ksi$

$CAFL_B := 16ksi$ $CAFL_E := 4.5ksi$

$CAFL_{B'} := 12ksi$ $CAFL_{E'} := 2.6ksi$

$CAFL_C := 10ksi$ $CAFL_{ET} := 1.2ksi$

5.7.1 Anchor Bolts (NCHRP 412 Example 2)

Properties:

(Previously calculated in section Anchor Bolts at Base Plate*)*

$r_{BG\_bp} = 13 \cdot in$ (Radius of anchor bolt circle)

$S_{BG\_bp} = 129.907 \cdot in^3$ (Section modulus of Anchor Bolt Group)

$A_{ab\_bp} = 2.498 \cdot in^2$ (Tensile Area of one bolt)

$A_{BG\_bp} = 19.986 \cdot in^2$ (Total Tensile Area of Anchor Bolt Group)

Demands:

$My_{to\_fat} = 57.33 \cdot kip \cdot ft$

$Mz_{to\_fat} = 11.34 \cdot kip \cdot ft$

$M_{fat\_to} := \sqrt{My_{to\_fat}^2 + Mz_{to\_fat}^2}$

$M_{fat\_to} = 58.441 \cdot kip \cdot ft$

$P_{to\_fat} = 0 \cdot kip$

<u>Anchor Bolt Stress Range</u>

$\frac{P_{to\_fat}}{A_{BG\_bp}} = 0 \cdot ksi$ $\frac{M_{fat\_to}}{S_{BG\_bp}} = 5.398 \cdot ksi$

$S_{R\_ab} := \frac{P_{to\_fat}}{A_{BG\_bp}} + \frac{M_{fat\_to}}{S_{BG\_bp}}$

$S_{R\_ab} = 5.398 \cdot ksi$

Anchor bolts are classified as Category D fatigue detail (Detail 5, section 11.9).

$CAFL_D = 7 \cdot ksi$

$\frac{S_{R\_ab}}{CAFL_D} = 0.771$ $Check_{ab\_fatigue} := if\left(S_{R\_ab} \le CAFL_D, \text{"OK"}, \text{"NOT OK, Redesign"}\right)$

$Check_{ab\_fatigue} = \text{"OK"}$

<u>5.7.2 Tower-to-Baseplate Connection Weld</u> (NCHRP 412 Example 2)

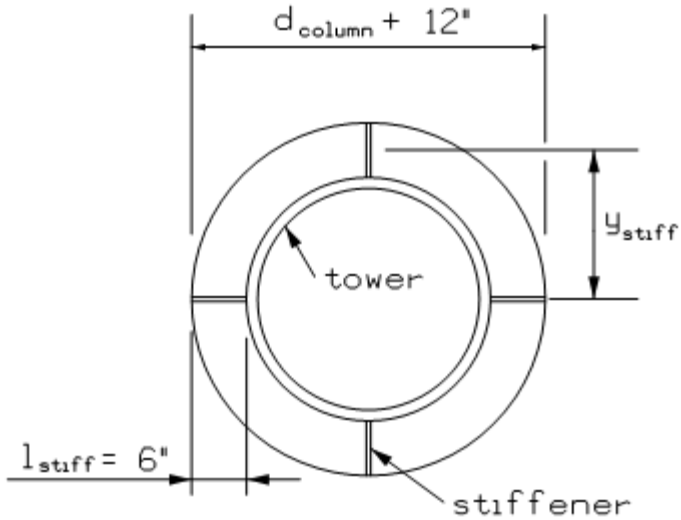

Properties:

$N_{stiffener\_bp} := 8$

$D_{to} = 20 \cdot in$

$t_{to} = 0.465 \cdot in$

$I_{to} = 1.36 \times 10^3 \cdot in^4$

$l_{stiff} := 6in$

$t_{stiff} := 0.5in$

$r_{stiffener} := \left(\frac{D_{to}}{2}\right) + \left(\frac{l_{stiff}}{2}\right) = 1.083\ ft$

$r_{stiffener} = 13 \cdot in$

$\alpha_{st\_bp} := \frac{360deg}{N_{stiffener\_bp}}$

$\alpha_{st\_bp} = 45 \cdot deg$

Area of stiffener at tower base:

$A_{stiff} := l_{stiff} \cdot t_{stiff}$

$A_{stiff} = 3 \cdot in^2$

Radius to the centroids of stiffeners at baseplate:

$a_{st\_bp} := r_{stiffener}$

$b_{st\_bp} := r_{stiffener} \cdot \cos(\alpha_{st\_bp})$

$a_{st\_bp} = 13 \cdot in$

$b_{st\_bp} = 9.192 \cdot in$

$c_{st\_bp} := \begin{cases} r_{stiffener} \cdot \cos(2\alpha_{st\_bp}) & \text{if } N_{stiffener\_bp} \geq 8 \\ 0 & \text{otherwise} \end{cases}$

$c_{st\_bp} = 0 \cdot in$

Moment of Inertia of Stiffeners:

$I_{st\_bp} := A_{stiff} \cdot \left(a_{st\_bp}^2 + 2 \cdot b_{st\_bp}^2 + 2 \cdot c_{st\_bp}^2\right) \cdot 2$

(This formula can accomodate up to 12 stiffeners.)

$I_{st\_bp} = 2.028 \times 10^3 \cdot in^4$

Moment of Inertia at Tower Base:

$$I_{towerbase} := I_{to} + I_{st\_bp}$$

$$I_{towerbase} = 3.388 \times 10^3 \cdot in^4$$

Stress Range, Tower-to-Baseplate Connection:

$$M_{fat\_to} = 58.441 \cdot kip \cdot ft$$

$$\frac{P_{to\_fat}}{A_{to} + N_{stiffener\_bp} \cdot A_{stiff}} = 0 \cdot ksi \qquad \frac{M_{fat\_to} \cdot \left(\frac{D_{to}}{2}\right)}{I_{towerbase}} = 2.07 \cdot ksi$$

$$S_{R\_tbp} := \frac{P_{to\_fat}}{A_{to} + N_{stiffener\_bp} \cdot A_{stiff}} + \frac{M_{fat\_to} \cdot \left(\frac{D_{to}}{2}\right)}{I_{towerbase}}$$

$$S_{R\_tbp} = 2.07 \cdot ksi$$

The fillet-welded tower-to-baseplate connection is classified as Category E` fatigue details (Detail 16, section 11.9).

$$CAFL_{E'} = 2.6 \cdot ksi$$

$$\frac{S_{R\_tbp}}{CAFL_{E'}} = 0.796 \qquad Check_{tbp\_fatigue} := \text{if}\left(S_{R\_tbp} \le CAFL_{E'}, \text{"OK"}, \text{"NOT OK, Redesign"}\right)$$

$$Check_{tbp\_fatigue} = \text{"OK"}$$

5.7.3 Stiffener-to-Baseplate Connection

(NCHRP 412 Example 2)

$$r_{stiff\_out} := \left(\frac{D_{to}}{2}\right) + \left(l_{stiff}\right) \qquad r_{stiff\_out} = 16 \cdot in$$

$$M_{fat\_to} = 58.441 \cdot kip \cdot ft$$

$$\frac{P_{to\_fat}}{A_{to} + N_{stiffener\_bp} \cdot A_{stiff}} = 0 \cdot ksi \qquad \frac{M_{fat\_to} \cdot r_{stiff\_out}}{I_{towerbase}} = 3.312 \cdot ksi$$

$$S_{R\_sbp} := \frac{P_{to\_fat}}{A_{to} + N_{stiffener\_bp} \cdot A_{stiff}} + \frac{M_{fat\_to} \cdot r_{stiff\_out}}{I_{towerbase}}$$

$$S_{R\_sbp} = 3.312 \cdot ksi$$

The fillet-welded stiffener-to baseplate connection is classified as Category C fatigue details (Detail 23, section 11.9).

(WisDOT Standard Detail 39.03)

$$t_{stiff} = 0.5 \cdot in$$

$$Check_{fillet\_sbp} := \begin{cases} \text{"Check note d, Table 11-2"} & \text{if } t_{stiff} > 0.5in \\ \text{"Use CAFL\_C"} & \text{otherwise} \end{cases}$$

$Check_{fillet\_sbp} = \text{"Use CAFL\_C"}$

$CAFL_C = 10 \cdot ksi$

$$\frac{S_{R\_sbp}}{CAFL_C} = 0.331 \qquad Check_{sbp\_fatigue} := if\left(S_{R\_sbp} \le CAFL_C, \text{"OK"}, \text{"NOT OK,Redesign"}\right)$$

$Check_{sbp\_fatigue} = \text{"OK"}$

5.7.4 Termination of Stiffener (NCHRP 412 Example 2)

$M_{y\_ts\_fatigue} = 54.65 \cdot kip \cdot ft$

$M_{z\_ts\_fatigue} = 10.8 \cdot kip \cdot ft$

$$M_{cr\_ts\_fatigue} := \sqrt{M_{y\_ts\_fatigue}^2 + M_{z\_ts\_fatigue}^2}$$

$M_{cr\_ts\_fatigue} = 55.707 \cdot kip \cdot ft$

$$\frac{P_{to\_fat}}{A_{to}} = 0 \cdot ksi \qquad \frac{M_{cr\_ts\_fatigue} \cdot \left(\frac{D_{to}}{2}\right)}{I_{to}} = 4.915 \cdot ksi$$

$$S_{R\_ts} := \frac{P_{to\_fat}}{A_{to}} + \frac{M_{cr\_ts\_fatigue} \cdot \left(\frac{D_{to}}{2}\right)}{I_{to}}$$

$S_{R\_ts} = 4.915 \cdot ksi$

The fillet-welded at the termination of the stiffener is classified as Category E fatigue details (Detail 21, section 11.9).

WisDOT referring to older AASHTO Sign Spec

$t_{stiff} = 0.5 \cdot in$

$$Check_{fillet\_t\_stiff} := \begin{cases} \text{"Check note d, Table 11-2"} & \text{if } t_{stiff} > 0.5in \\ \text{"Use CAFL\_E"} & \text{otherwise} \end{cases}$$

$Check_{fillet\_t\_stiff} = \text{"Use CAFL\_E"}$

$CAFL_E = 4.5 \cdot ksi$

$$\frac{S_{R\_ts}}{CAFL_E} = 1.092 \qquad Check_{t\_stiff\_fatigue} := if\left(S_{R\_ts} \le CAFL_E, \text{"OK"}, \text{"NOT OK, Redesign"}\right)$$

$Check_{t\_stiff\_fatigue} = \text{"NOT OK, Redesign"}$

WisDOT Standard stiffener detail -- consider fatigue at termination of stiffener OK

5.7.5 Tower Handhole

(NCHRP 412 Example 3, NCHRP 469 Examples 4 and 6)

From standard detail 39.13:

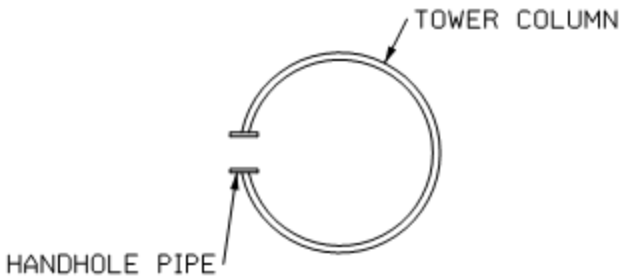

$M_{y\_hh\_fatigue} = 5.504 \times 10^4\ ft{\cdot}lb$

$M_{z\_hh\_fatigue} = 1.087 \times 10^4\ ft{\cdot}lb$

$M_{cr\_hh\_fatigue} := M_{z\_hh\_fatigue}$

The handhole on the opposite side of sign truss, subjected mainly to Mz.

$M_{cr\_hh\_fatigue} = 10.87{\cdot}kip{\cdot}ft$

$I_{to} = 1.36 \times 10^3{\cdot}in^4$

$A_{to\_hh} := A_{to} - 5.562in{\cdot}t_{to}$

$A_{to\_hh} = 25.914{\cdot}in^2$

Stress Range:

$$\frac{P_{to\_fat}}{A_{to\_hh}} = 0{\cdot}ksi \qquad \frac{M_{cr\_hh\_fatigue}{\cdot}\left(\frac{D_{to}}{2}\right)}{I_{to}} = 0.959{\cdot}ksi$$

$$S_{R\_hh} := \frac{P_{to\_fat}}{A_{to\_hh}} + \frac{M_{cr\_hh\_fatigue}{\cdot}\left(\frac{D_{to}}{2}\right)}{I_{to}}$$

$S_{R\_hh} = 0.959{\cdot}ksi$

Assume CAFL for Category E based on Sign Figue 11-1, Example 13, Detail 20.

$CAFL_E = 4.5{\cdot}ksi$

$$\frac{S_{R\_hh}}{CAFL_E} = 0.213 \qquad Check_{hh\_fatigue} := if\left(CAFL_E \geq S_{R\_hh}, \text{"OK"}, \text{"NOT OK, Redesign"}\right)$$

$Check_{hh\_fatigue} = \text{"OK"}$

5.7.6 Chord-to-Coupling Plate Weld and Gusset Plate-to-Chord Weld

(Not Applicable to a Single-Column Cantilever Sign Truss)

5.7.7 Chord Coupling Plate Bolt Connection (NCHRP 469 Example 6)

(Not Applicable to a Single-Column Cantilever Sign Truss)

5.7.8 Angle-to-Gusset Connection Weld (NCHRP 469 Example 3)

5.7.8.1 Boxed End

$P_{be\_fat} = 0.391 \cdot kip$

$Mz_{be\_fat} = 0 \cdot kip \cdot ft$

Stress Range:

$$\frac{P_{be\_fat}}{A_{be}} = 0.272 \cdot ksi \qquad \frac{Mz_{be\_fat}}{S_{be}} = 0 \cdot ksi$$

$$S_{R\_be} := \frac{P_{be\_fat}}{A_{be}} + \frac{Mz_{be\_fat}}{S_{be}}$$

$$S_{R\_be} = 0.272 \cdot ksi$$

For angle-to-gusset connections with welds terminating short of the plate edge, a Category E fatigue detail (Detail 14 in Table 11-2)

$CAFL_E = 4.5 \cdot ksi$

$$\frac{S_{R\_be}}{CAFL_E} = 0.06 \qquad Check_{fatigue\_be} := \text{if}\left(CAFL_E \geq S_{R\_be}, \text{"OK"}, \text{"NOT OK, Redesign"}\right)$$

$Check_{fatigue\_be} = \text{"OK"}$

5.7.8.2 Transverse Web

$P_{tr\_fat} = 0.458 \cdot kip$

$Mz_{tr\_fat} = 0 \cdot kip \cdot ft$

Stress Range:

$$\frac{P_{tr\_fat}}{A_{tr}} = 0.385 \cdot ksi \qquad \frac{Mz_{tr\_fat}}{S_{tr}} = 0 \cdot ksi$$

$$S_{R\_tr} := \frac{P_{tr\_fat}}{A_{tr}} + \frac{Mz_{tr\_fat}}{S_{tr}}$$

$$S_{R\_tr} = 0.385 \cdot ksi$$

For angle-to-gusset connections with welds terminating short of the plate edge, a Category E fatigue detail (Detail 14 in Table 11-2)

$CAFL_E = 4.5 \cdot ksi$

$\frac{S_{R\_tr}}{CAFL_E} = 0.086$ $\quad Check_{fatigue\_tr} := if\left(CAFL_E \geq S_{R\_tr}, "OK", "NOT\ OK,\ Redesign"\right)$

$Check_{fatigue\_tr} = "OK"$

5.7.8.3 Front/Rear Web

$P_{fr\_fat} = 0.331 \cdot kip$

$Mz_{fr\_fat} = 0 \cdot kip \cdot ft$

Stress Range:

$\frac{P_{fr\_fat}}{A_{fr}} = 0.23 \cdot ksi$ $\quad \frac{Mz_{fr\_fat}}{S_{fr}} = 0 \cdot ksi$

$S_{R\_fr} := \frac{P_{fr\_fat}}{A_{fr}} + \frac{Mz_{fr\_fat}}{S_{fr}}$

$S_{R\_fr} = 0.23 \cdot ksi$

For angle-to-gusset connections with welds terminating short of the plate edge, a Category E fatigue detail (Detail 14 in Table 11-2)

$CAFL_E = 4.5 \cdot ksi$

$\frac{S_{R\_fr}}{CAFL_E} = 0.051$ $\quad Check_{fatigue\_fr} := if\left(CAFL_E \geq S_{R\_fr}, "OK", "NOT\ OK,\ Redesign"\right)$

$Check_{fatigue\_fr} = "OK"$

(Note: For front and rear web members, the stress from truck gust is higher than that from natural wind gust. But since we make the size of front and rear web members match the size of top and front web members, natural wind gust controls the design of top/bottom and front/rear web members.)

5.7.8.4 Top/Bottom Web

$P_{tb\_fat} = 2.1 \cdot kip$

$Mz_{tb\_fat} = 0 \cdot kip \cdot ft$

Stress Range:

$\frac{P_{tb\_fat}}{A_{tb}} = 1.458 \cdot ksi$ $\quad \frac{Mz_{tb\_fat}}{S_{tb}} = 0 \cdot ksi$

$S_{R\_tb} := \frac{P_{tb\_fat}}{A_{tb}} + \frac{Mz_{tb\_fat}}{S_{tb}}$

$S_{R\_tb} = 1.458 \cdot ksi$

For angle-to-gusset connections with welds terminating short of the plate

edge, a Category E fatigue detail (Detail 14 in Table 11-2)

$$CAFL_E = 4.5 \cdot ksi$$

$$\frac{S_{R\_tb}}{CAFL_E} = 0.324 \qquad Check_{fatigue\_tb} := if\left(CAFL_E \geq S_{R\_tb}, \text{"OK"}, \text{"NOT OK, Redesign"}\right)$$

$$Check_{fatigue\_tb} = \text{"OK"}$$

5.7.8.5 Tower Web

$$P_{tw\_fat} = 0 \cdot kip$$

$$Mz_{tw\_fat} = 0 \cdot kip \cdot ft$$

Stress Range:

$$\frac{P_{tw\_fat}}{A_{tw}} = 0 \cdot ksi \qquad \frac{Mz_{tw\_fat}}{S_{tw}} = 0 \cdot ksi$$

$$S_{R\_tw} := \frac{P_{tw\_fat}}{A_{tw}} + \frac{Mz_{tw\_fat}}{S_{tw}}$$

$$S_{R\_tw} = 0 \cdot ksi$$

For angle-to-gusset connections with welds terminating short of the plate edge, a Category E fatigue detail (Detail 14 in Table 11-2)

$$CAFL_E = 4.5 \cdot ksi$$

$$\frac{S_{R\_tw}}{CAFL_E} = 0 \qquad Check_{fatigue\_tw} := if\left(CAFL_E \geq S_{R\_tw}, \text{"OK"}, \text{"NOT OK, Redesign"}\right)$$

$$Check_{fatigue\_tw} = \text{"OK"}$$

6.0 Summary of Analysis Results

Design of Members Based on Strength

Member	Loading	Applied Stress / Allowable Stress	Acceptability
Chord	Compression, Comb. 1 (Sign Eq. 5-17)	0.41	OK
Chord	Compression, Comb. 2 (Sign Eq. 5-18)	0.56	OK
Chord	Tension (Sign Eq. 5-20)	0.29	OK
Tower	Compression (Sign Eq. 5-16)	0.95	OK
Tower	Tension (Sign Eq. 5-20)	0.07	OK
Boxed End	Compression	0.37	OK
Transverse Web	Compression	0.34	OK
Front & Rear Web	Compression	0.47	OK
Top & Bottom Web	Compression	0.53	OK
Tower Web	Compression	0.00	OK

Fatigue Analysis

Connection	Detail No.	Stress Category	CAFL (ksi)	Stress Range (ksi)	Range / CAFL	Acceptability
Anchor Bolts	5	D	7.0	5.4	0.77	OK
Tower-to-Baseplate	16	E`	2.6	2.1	0.80	OK
Stiffener-to-Baseplate	23	C	10.0	3.3	0.33	OK
Termination of Stiffener	21	E	4.5	4.9	1.09	NG
Tower Handhole	20	E	4.5	1.0	0.21	OK
Chord Coupling Plate Bolts	5	D	7.0	2.3	0.33	OK
Boxed End-to-Gusset Plate Weld	14	E	4.5	0.3	0.06	OK
Trans. Web-to-Gusset Plate Weld	14	E	4.5	0.4	0.09	OK
F/R-to-Gusset Plate Weld	14	E	4.5	0.2	0.05	OK
T/B-to-Gusset Plate Weld	14	E	4.5	1.5	0.32	OK
T/W-to-Gusset Plate Weld	14	E	4.5	0.0	0.00	OK

Note: CAFL = Constant Amplitue Fatigue Limit

WisDOT Standard stiffener detail -- consider fatigue at termination of stiffener OK

The Stress Category shown above for "Termination of Stiffner" is the stress category that works for a WisDOT 4-chord cantilevered sign truss.

Camber:

$$\text{Camber} = 2.875 \cdot \text{in}$$

Base Plate:

$t_{o\_weld\_bp} = 0.313 \cdot in$

$t_{base\_plate} = 2 \cdot in$

$t_{stiff} = 0.5 \cdot in$

$h_{stiff} = 14 \cdot in$

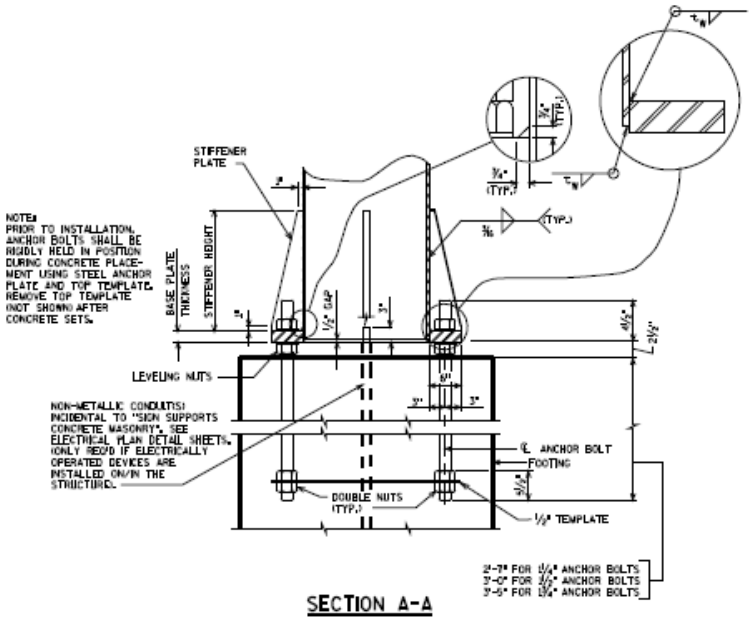

Anchor Bolts:

$N_{ab\_bp} = 8$

$d_{bolts\_bp} = 2 \cdot in$

Cantilever Sign Bridge Footing

2013-08-01

Y. Chun

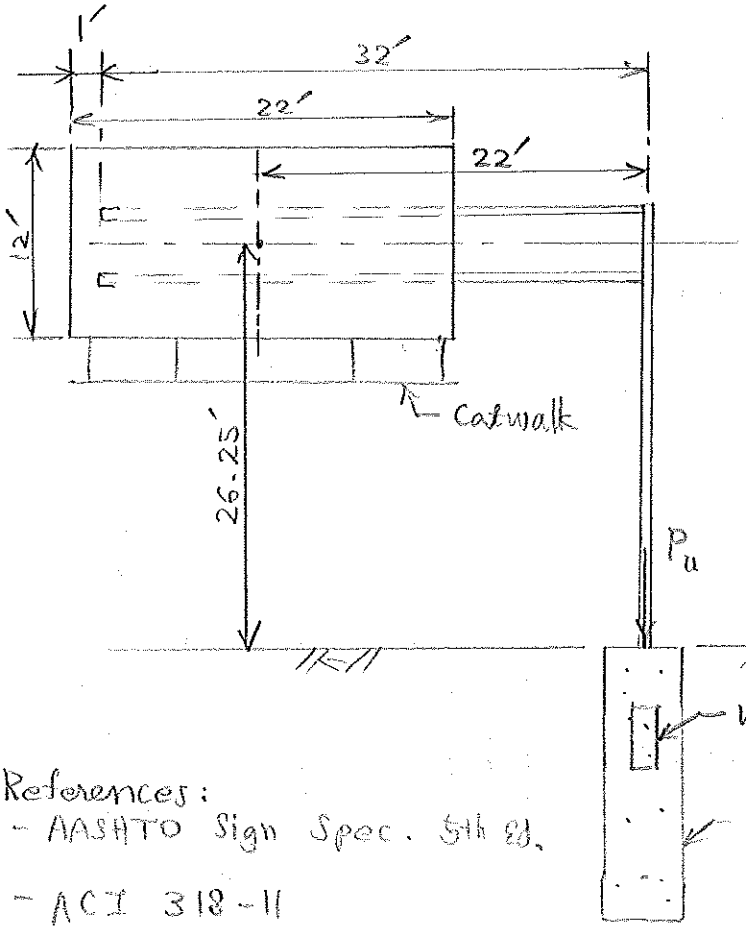

Service wind load on sign panel taking into account drag coefficient = 30 lb/ft²

References:
- AASHTO Sign Spec. 5th Ed.
- ACI 318-11

Factored load = 1.3 × Service load

AASHTO Std Spec. for Hwy Bridges, 17th Ed.

○ Factored loads at top of footing, based on RISA-3D output:

P_u = 15 kips → Very small. Disregard in calculation.

V_u = 15 kips

M_u = 430 ft·kips

} Resultants of y and z components

T_u = 265 ft·kips

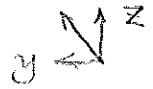

PLAN

YC

- Flexural reinforcement

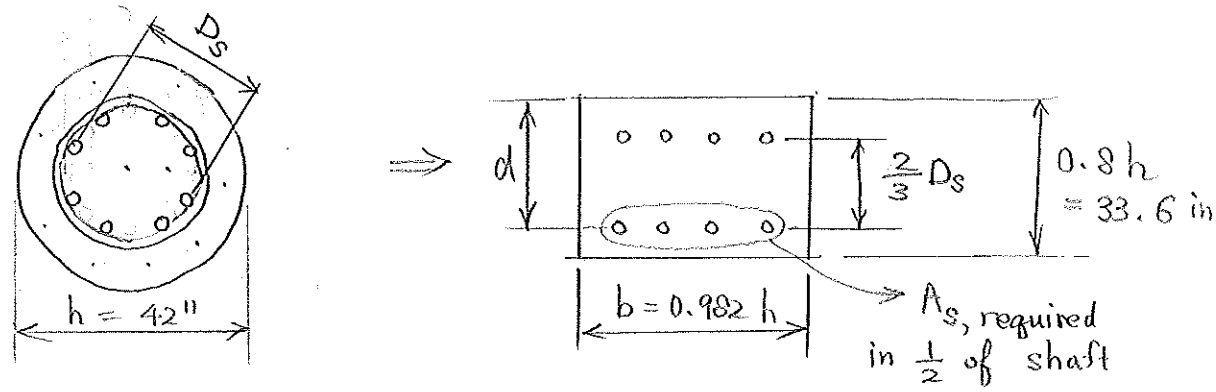

Whitney's equivalent rectangular column

(P. 283 ; Design of Reinforced Concrete 8th Ed. by Jack C. McCormac)

$$D_s = 42'' - 2\left(3'' + \overset{\text{No. 5}}{\frac{5}{8}''}\right) - \overset{\text{No. 7}}{\frac{7}{8}''}$$

$$= 33.9 \text{ in}$$

$$b = 0.982\,h = 0.982 \times 42 \text{ in}$$

$$= 41.2 \text{ in}$$

$$d = 0.4h + \frac{1}{3}D_s = 0.4 \times 42'' + \frac{33.9 \text{ in}}{3}$$

$$= 28.1 \text{ in.}$$

$$\phi M_n = \phi A_s f_y j d \geq M_u \quad . \qquad j = \frac{\left(d - \frac{a}{2}\right)}{d} \approx 0.90$$

$$A_{s,\text{required}} \ (\text{in}^2) = \frac{M_u}{\phi f_y j d}$$

$$\doteq \frac{M_u^{\text{ft.k}} \times 12000^{\text{in.lb/ft.k}}}{0.90 \times 60000 \frac{\text{lb}}{\text{in}^2} \times 0.90 \times 28.1 \text{ in}}$$

$$= 0.00879 \ M_u^{\text{ft.k}} = 0.00879 \times 430^{\text{ft.k}}$$

$$= 3.8 \text{ in}^2 \quad \text{for } \tfrac{1}{2} \text{ of shaft}$$

$$A_{s,\text{min.}} = \text{The larger of} \begin{cases} \frac{3\sqrt{f'_c}}{f_y} b_w d = \frac{3\sqrt{3500}}{f_y} b_w d = 178 \frac{b_w d}{f_y} \\ 200 \ b_w d / f_y = 200 \times 41.2^{\text{in}} \times 28.1 \text{ in} / 60000 \\ \quad = 3.86 \text{ in.}^2 \leftarrow \text{CONTROLS} \end{cases}$$

Yc

- Shear reinforcement

$\phi V_c = \phi\, 2\sqrt{f'_c}\, b_w d$ (ACI Eq. (11-3))

$= 0.75 \times 2\sqrt{3500_{psi}} \times 41.2\text{ in.} \times 28.1\text{ in.}$

$= 102{,}700\text{ lb}$

$= 102.7\text{ kips} \gg 0.5\, V_u = 0.5 \times 15^{kips} = 7.5\text{ kips}$

$\longrightarrow$ No shear reinforcement is required. (ACI 11.4.6.1)

Comparison with AASHTO LRFD Bridge Design Spec. 5th Ed. 2010.

$b_v = 42\text{ in.}$ (AASHTO LRFD 5.8.2.9)

$d_e = \frac{D}{2} + \frac{D_p}{\pi}$ ($D_p = D_s$ on p. 2) (" " Eq. (C5.8.2.9-2))

$= \frac{42^{in}}{2} + \frac{33.9\text{ in}}{3.14}$

$= 31.8\text{ in.}$

$d_v = 0.9\, d_e = 0.9 \times 31.8\text{ in} = 28.6\text{ in.}$

$V_c = 0.0316\,\beta\sqrt{f'_{c\,ksi}}\, b_v d_v$ (AASHTO LRFD Eq. (5.8.3.3-3))

$= 0.0316 \times 2\sqrt{3.5} \times 42'' \times 28.6''$ (AASHTO LRFD 5.8.3.4.1)

$= 142\text{ kips}$

YC

- Torsion reinforcement (ACI 11.5.1)
  - Threshold torsion

$$\phi \lambda \sqrt{f'_c}\left(\frac{A_{cp}^2}{P_{cp}}\right) = 0.75 \times 1 \times \sqrt{3500\ psi}\left[\frac{(1385\ in^2)^2}{132\ in}\right]$$

$$= 644800\ in.lb \times 1\ ft.k / 12000\ in.lb$$

$$= 53.7\ ft.k \leftarrow$$

$$A_{cp} = \frac{\pi D^2}{4} = \frac{\pi (42\ in)^2}{4} = 1385\ in^2$$

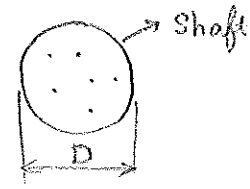

$$P_{cp} = \pi D = \pi \times 42\ in = 132\ in$$

$$T_u = 265\ ft.k \geq 53.7\ ft.k$$

Torsion must be considered.

  - Is cross-section large enough? (ACI 11.5.3.1)

Stirrup out-to-out dimension

$$P_h = \pi\left(36'' - \frac{5}{8}''\right) = 111\ in$$

$$A_{oh} = \pi\frac{\left(36'' - \frac{5}{8}''\right)^2}{4} = 983\ in^2$$

$$\sqrt{\left(\frac{V_u}{b_w d}\right)^2 + \left(\frac{T_u P_h}{1.7 A_{oh}^2}\right)^2} = \sqrt{\left(\frac{15000\ lb}{41.2'' \times 28.1''}\right)^2 + \left(300\ ft.k \times 12000\ in.lb/ft.k \times 1\right.}$$

$$= \sqrt{\left(\frac{15000\ lb}{41.2\ in \times 28.1\ in}\right)^2 + \left[\frac{265\ ft.k \times 12000\ in.lb/ft.k \times 111\ in}{1.7 \times (983\ in^2)^2}\right]}$$

$$= \sqrt{(13\ psi)^2 + (215\ psi)^2}$$

$$= 215\ psi \leq \phi\ 10\sqrt{f'_c} = 0.75 \times 10\sqrt{3500\ psi}$$

$$= 444\ psi$$

The cross-section is large enough. OK.

YC

▷ Torsion stirrup (ACI 11.5.3.6)

• $\phi T_n \geq T_u$

$A_o = 0.85 A_{oh} = 0.85 \times 983 \text{ in.}^2 = 835 \text{ in.}^2$ ✓ P. 4

Let $\theta = 45^\circ \rightarrow \cot\theta = 1$

$$\phi T_n = \phi \frac{2 A_o A_t}{s} f_{yt} \cot\theta \geq T_u \qquad \text{(ACI Eq. (11-21))}$$

$$\frac{A_t}{s}, \text{req'd} \geq \frac{T_u}{\phi 2 A_o f_{yt}} = \frac{T_u^{\text{ft.kips}} \times 12000 \text{ in.lb/ft.kip}}{0.75 \times 2 \times 835 \text{ in.}^2 \times 60000 \text{ lb/in.}^2}$$

$$\left(\frac{\text{in.}^2}{\text{in}}\right) = 0.000160\, T_u^{\text{ft.kips}}$$

$$= 0.000160 \times 265^{\text{ft.kips}}$$

$$= 0.0424 \text{ in.}^2/\text{in.}$$

$$\frac{2A_t}{s}, \text{req'd} = 2 \times 0.0424 \text{ in.}^2/\text{in.} = 0.0848 \text{ in.}^2/\text{in.}$$

• Minimum torsion reinforcement (ACI 11.5.5.2)

$$\frac{A_v + 2A_t}{s}, \text{minimum} = \text{The larger of} \qquad \text{(ACI Eq. (11-23))}$$

$$\begin{cases} 0.75\sqrt{f'_c}\,\dfrac{b_w}{f_{yt}} = 0.75\sqrt{3500 \text{ psi}} \times \dfrac{b_w}{f_{yt}} = 44.4\,\dfrac{b_w}{f_{yt}} \\ 50\,\dfrac{b_w}{f_{yt}} = 50 \times \dfrac{41.2 \text{ in}}{60000 \text{ psi}} \end{cases}$$

$$= 0.0344 \frac{\text{in.}^2}{\text{in.}} < \frac{2A_t}{s}, \text{req'd} = 0.0848 \frac{\text{in.}^2}{\text{in.}}$$

↑ CONTROLS

○ Try No. 5 at 6 in

$$\frac{A_t}{s} = \frac{0.31 \text{ in.}^2}{6} = 0.0517 \frac{\text{in.}^2}{\text{in.}} \geq \frac{A_t}{s}, \text{req'd} = 0.0424 \text{ in.}^2/\text{in.}$$

OK

YC

Torsion stirrup spacing:

$s_{max.}$ = The smaller of $\begin{cases} P_h/8 = 111\ \text{in}/8 = 13.8\ \text{in} \\ 12\ \text{in} \end{cases}$ ← (ACI 11.5.6.1)

P. 4

s_{chosen} = 6 in. OK

▷ Torsion longitudinal reinforcement (ACI 11.5.3.7)

$$A_{l,req'd} = \frac{A_t}{s}, req'd \times P_h \left(\frac{f_{yt}}{f_y}\right) \cot^2\theta$$

$$= 0.000160\ T_u^{ft.kips} \times 111\ \text{in.} \times \frac{60000\ psi}{60000\ psi} \times 1^2$$

P. 4

$$= 0.0178\ T_u^{ft.\ kips}$$

$$= 0.0178 \times 265^{ft.\ kips}$$

$$= 4.72\ \text{in}^2$$ distributed evenly ← CONTROLS

$$A_{l,\,min.} = \frac{5\sqrt{f'_c}\,A_{cp}}{f_y} - \left(\frac{A_t}{s}\right) P_h \frac{f_{yt}}{f_y}$$

$$= \frac{5\sqrt{3500} \times 1385\ \text{in.}^2}{60000} - \left(\frac{0.31\ \text{in}^2}{6\ \text{in}}\right) \times 111\ \text{in} \times \frac{60000\ psi}{60000\ psi}$$

P. 4

$$= 6.83\ \text{in.}^2 - 5.73\ \text{in.}^2$$

$$= 1.1\ \text{in.}^2$$

where, $\frac{A_t}{s}$ = The larger of

$$\begin{cases} \left(\frac{A_t}{s}\right)_{chosen} = \frac{0.31\ \text{in.}^2}{6\ \text{in}} = 0.0517\ \frac{\text{in}^2}{\text{in}} \leftarrow \\ 25\ \frac{b_w}{f_{yt}} = 25 \times \frac{41.2\ \text{in}}{60000} = 0.0172\ \frac{\text{in}^2}{\text{in}} \end{cases}$$

Maximum s for A_l = 12 in. (ACI 11.5.6.2)

<u>Minimum</u> diameter of A_l bars

= The larger of $\begin{cases} 0.042\ s_{stirrup} = 0.042 \times 6\ \text{in} = 0.252\ \text{in} \\ \frac{3}{8}\ \text{in} \leftarrow \end{cases}$

YC

o Total longitudinal bars for the shaft

$2 \times (A_s \text{ for } \frac{1}{2} \text{ of shaft}) + A_\ell$

$= 2 \times 3.86 \text{ in.}^2 + 4.72 \text{ in.}^2$ ← P. 2

$= 7.72 \text{ in.}^2 + 4.72 \text{ in.}^2$

$= 12.5 \text{ in.}^2$

Number of No. 7 longitudinal bars req'd:

$\frac{12.5 \text{ in}^2}{0.60 \text{ in.}^2/\text{bar}} = 20.8 \rightarrow 21$ bars

---

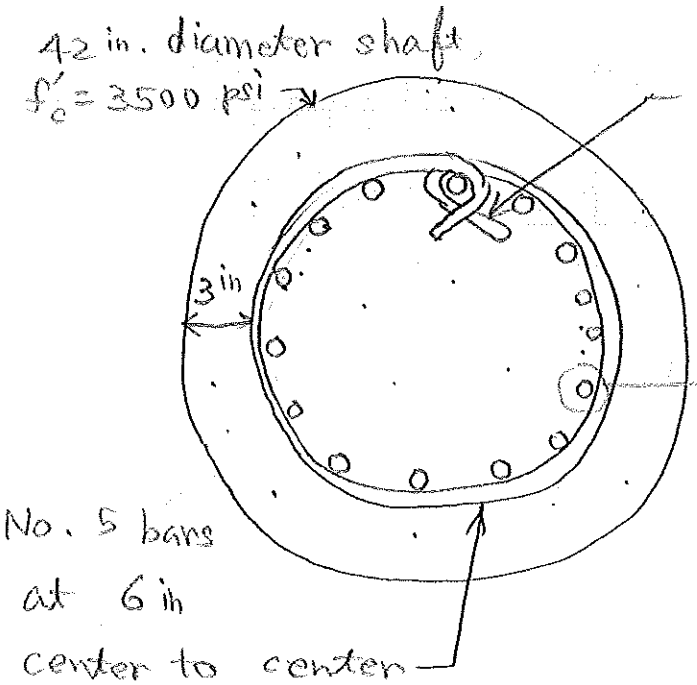

① 21 No. 7 bars, if the conditions shown on sheet 1 exist:
(30 psf service wind on sign + catwalk + 22' horizontal distance between ℄ sign and ℄ col.)

② If no catwalk or a service wind ≈ 28 psf on sign, then 20 No. 7 bars are sufficient.

KSA Consultants	COMPUTATION BY	DATE	
3636 N. 124th St. Wauwatosa, WI 53222	VJD	5/30/14	
	CHECKED BY	DATE	KSA PROJECT NO.
	YC	5/30/14	8384B
TEL: (262) 821-1171 FAX: (262) 821-1174	CLIENT		CLIENT PROJECT NO.
	Ayres Associates, Inc./WisDOT		1071-06-78

S-32-0059,58 Shaft Embedment Length

AASHTO Sign Specification 13.6.1

Soil Type	Cohesionless			RISA 3D Output		
Overload Factor	2.00			My=	190.34	k-ft
Undercapacity Factor	0.70			Mz=	132.607	k-ft
Safety Factor (Over/Under)	2.86			Vy=	1.92	k-ft
Drilled Shaft Diameter, D	3.50	ft		Vz=	10	k-ft
Cohesion, c	0.00	k/ft2				
Friction Angle, ϕ	30.00	deg				
Friction Angle, ϕ	0.52	rad				
Unit Weight Soil, γ (k/ft^3)	0.15	kcf				
45 deg=	0.79	rad				
Service M =	231.98	k-ft	$\sqrt{M_y^2 + M_z^2}$			
Service V =	10.18	k	$\sqrt{V_y^2 + V_z^2}$			
Factored M_F =	662.80	k-ft	Safety Factor * Serv. M			
Factored V_F =	29.09	k	Safety Factor * Serv. V			
$K_p = \tan^2(45 + \phi/2)$	3					
Assumed Depth, L	10.74	10.73	ft			
$L3 - 2V_FL/K_p\gamma D - 2M_F/K_p\gamma D$	0.412	-2.676		AASHTO Sign Eq. C13-7		
	L_{req}=	**10.74**	ft			
	L_{min}=	13	ft	Minimum Embedment Per WisDOT Standard		
		OK				

Note: Since this calculation disregards contributions from the wings, the required embedment lengths are conservative