CHAPTER 17

17.0 QUALITY ASSURANCE

INTENTIONALLY LEFT BLANK

CHAPTER 17
QUALITY ASSURANCE

TABLE OF CONTENTS

On April 29, 2013, the name Carolina Power and Light Company (CP&L) was changed to Duke Energy Progress, Inc. (DEP). On September 13, 2016, the name Duke Energy Progress, Inc. was changed to Duke Energy Progress, LLC.

CHAPTER 17
QUALITY ASSURANCE

TABLE OF CONTENTS (continued)

On April 29, 2013, the name Carolina Power and Light Company (CP&L) was changed to Duke Energy Progress, Inc. (DEP). On September 13, 2016, the name Duke Energy Progress, Inc. was changed to Duke Energy Progress, LLC.

CHAPTER 17
QUALITY ASSURANCE

LIST OF TABLES

On April 29, 2013, the name Carolina Power and Light Company (CP&L) was changed to Duke Energy Progress, Inc. (DEP). On September 13, 2016, the name Duke Energy Progress, Inc. was changed to Duke Energy Progress, LLC.

CHAPTER 17
QUALITY ASSURANCE

LIST OF FIGURES

On April 29, 2013, the name Carolina Power and Light Company (CP&L) was changed to Duke Energy Progress, Inc. (DEP). On September 13, 2016, the name Duke Energy Progress, Inc. was changed to Duke Energy Progress, LLC.

17.0 QUALITY ASSURANCE

17.1 QUALITY ASSURANCE DURING DESIGN AND CONSTRUCTION **[HISTORICAL]**

Carolina Power & Light Company (CP&L) took action to ensure that the completed plant was designed and constructed with the goals in mind that the completed plant could be operated safely and reliably in every respect.

Quality assurance programs were initiated and in effect for design, procurement, fabrication, manufacturing, erection, and testing of components and systems for the H. B. Robinson Plant Unit 2. The responsibilities of CP&L, Ebasco, and Westinghouse Electric Corporation (Westinghouse) for quality assurance are described in this section.

INTENTIONALLY LEFT BLANK

17.1.1 QUALITY ASSURANCE PLANNING **[HISTORICAL]**

Ultimate responsibility for all matters pertaining to the plant, including quality assurance, rested with the applicant. To ensure that the goals of this program were met, CP&L, Ebasco, and Westinghouse jointly planned a program which included the following items:

a) Development of design concepts

b) Engineering design

c) Equipment and system specifications

d) Vendor selection

e) Surveillance of Vendors' shops and procedures

f) Component testing

g) Erection, inspection, field testing, and quality control

h) System checkout

i) Startup testing

In the design and procurement phase, this program was coordinated by frequent contacts among CP&L, Ebasco, and Westinghouse. A method of mutual review of important specifications and designs was in force.

In the construction phase, a unified field quality control group was established under the direction of the Ebasco Quality Control Engineer. This group had authority to suspend work. CP&L, as the applicant, actively participated in the field program.

The individual responsibilities and organizational structures are described below.

INTENTIONALLY LEFT BLANK

17.1.2 CAROLINA POWER & LIGHT COMPANY QUALITY ASSURANCE PROGRAM **[HISTORICAL]**

CP&L recognized the necessity of providing a quality assurance program to ensure that quality control procedures established by the designer, constructor, and vendors were adequate and were followed. As a result, the HBR Quality Assurance Committee (QAC) was created to perform the auditing of the quality assurance and control program. The Committee performed an advisory function only; line responsibility for quality assurance and quality control was a function of CP&L Management's Line Organization.

The Committee was established in July, 1968, with the following charter:

"The purpose of the Quality Assurance Committee is to audit and to advise CP&L management through the QAC Chairman concerning the adequacy of the Quality Assurance and Control Program and plans for post-operational surveillance and inspection for the H. B. Robinson Unit 2."

Specifically, its function was to:

a) Make recommendations concerning appropriate levels and methods of Quality Assurance and Control for each system, taking account of the importance of the system with respect to nuclear safety and for operation

b) Provide advice concerning assignment of Quality Assurance responsibility

c) Review reports submitted by CP&L personnel and/or independent Quality Assurance representatives and other reports as appropriate

d) Provide advice concerning other matters the QAC considered pertinent to maintaining proper Quality Assurance and Control

e) Keep minutes of its meetings "including statements concerning recommended actions and if these recommendations are unanimous."

This Committee was under the chairmanship of CP&L's Director of Technical Services reporting directly to CP&L's Vice President of the Power Supply Department. The Director of Technical Services was selected to lead the Committee since he represented a staff position reporting to CP&L top management and was not directly responsible for the design and construction of the facility. Serving on the Committee were the section managers responsible for the design, construction, operation, and maintenance of CP&L's plant, giving broad areas of experience and concern. The Manager of Nuclear Generation was included on the Committee to provide continuity from the design and construction phase to the operation phase. The Operating and Maintenance Engineer was also included on the committee. The Committee also included two members from outside the CP&L organization who were experienced in the area of quality assurance and quality control. CP&L engaged the Southwest Research Institute (SWRI) to provide support to efforts of the Design & Construction Section in the auditing of quality control procedures, fabrication, onsite storage, and erection of components vital to safety. The SWRI Manager of the CP&L project was a member of the QAC.

The firm of Pickard, Lowe, & Associates (PLA) was employed as nuclear consultants on the Robinson project. Their personnel provided a wide range of knowledge in the field of quality assurance. A member of the firm served as a member of the QAC. Although not committee members, other engineers from both the Technical Services Section and the Design Construction Section regularly attended and participated in Committee meetings and Committee activities.

Created as an auditing body, the Committee had established internal administrative procedures governing the conduct of its activities. Meetings were normally held each calendar month or more frequently if required with minutes prepared and issued to each Committee member and to CP&L upper management. Meetings were scheduled to include all members of the Committee or a knowledgeable representative from each organization or section. Meetings were on occasion held at the plant site to review site records and construction activity.

The prepared Committee meeting minutes divided activities into three categories:

a) Items which had been resolved to the satisfaction of all Committee members during the intervening period

b) Action items currently in progress

c) New topics for consideration which had been presented to the Committee by any member, alternate, or the CP&L Resident Engineer.

Reports of all inspections by Committee members were transmitted to other members, the Resident Engineer, and CP&L management with a copy retained in Committee files.

The Committee had the responsibility of auditing the quality assurance and control program established for the project by CP&L, Westinghouse, Ebasco, and all other vendors. The Committee implemented this responsibility through evaluation of the procedures, methods, and results of tests, and inspections conducted by these organizations. The Committee acted through written request to the Design & Construction Section initiating further action when deemed necessary by the Committee.

The Committee, realizing certain equipment, components, and structures are more essential to safety than others, adopted a list of systems and equipment to guide decisions on the level of effort in reviewing quality control programs. This list is shown in Table 17.1.2-1. Equipment, materials, systems, and structures listed in that table were subjected to the provisions of the quality assurance plan. Specifically, the provisions of the plan were applied to those portions whose integrity or reliability is essential either to preventing nuclear accidents having the potential of causing injury to the public from substantial levels of radiation or from release of radioactive materials, or to mitigating the consequences of such accidents. The extent to which the measures set forth in the plan were applied to any such portion is reflected by its importance in preventing or mitigating such accidents.

The Manager of Design and Construction was responsible for the direction of the activities of the outside organizations, PLA, and SWRI. CP&L maintained direct communication with Westinghouse and Ebasco project personnel through the Manager of Design and Construction. The Manager of Design and Construction was the Committee member most directly involved and responsible for the proper application of quality standards, practices, and procedures.

These responsibilities were carried out utilizing seven areas of review and approval in the quality control program. These included:

a) Design review

b) Evaluation of potential equipment suppliers

c) Equipment specification review

d) Purchase order approval

e) Supplier surveillance during fabrication

f) Observation of components, shipment, and field storage

g) Surveillance of the erection and installation of equipment

The Quality Assurance Committee Chairman audited the practices employed in Items a through d above and reported his findings to the QAC.

The SWRI augmented the efforts of Design and Construction personnel in the auditing of Items e through g. SWRI personnel assigned to the CP&L project included experts in the fields of welding, metallurgy, nondestructive testing, and stress analysis. Additional engineers in the fields of mechanical, electrical, and instrumentation design as well as materials evaluation were available as required.

During fabrication of equipment, CP&L was kept informed by written reports of progress to permit timely quality control audit visits to the fabricators' shops. In some instances, procedures were actually witnessed by CP&L engineers or SWRI personnel while on other occasions quality control records were inspected. Westinghouse and Ebasco quality control personnel had primary responsibility of fabrication shop audits. They wrote detailed reports of these shop surveillance trips which were available for CP&L review.

Shipment and onsite storage were under the observation of CP&L's Resident Engineer for the HBR Project, assisted by SWRI.

The Director of Technical Services kept the Committee informed in regard to conformance with design criteria as specified in the safety analysis report.

The Resident Engineer(s) reported directly to the Manager of Design and Construction concerning quality assurance considerations at the site, covering all phases of receipt, storage, and erection of equipment and materials. He was not responsible for maintaining the construction schedule. He was responsible for review of quality assurance programs as well as auditing quality control procedures used by Westinghouse, Ebasco, and their

subcontractors at the site. The Resident Engineers were in contact with Westinghouse and Ebasco site quality control groups and provided a continuing review of their quality control efforts. The Resident Engineer(s) had authority to stop any phase of construction work where he felt quality or procedures were questionable. Deficiencies in quality control procedures noted by the Resident Engineer(s) were reported immediately to the Manager of Design and Construction. Direct communications with Westinghouse and Ebasco Project Managers by the Manager of Design and Construction permitted rapid evaluation and corrective action of quality control problems associated with
the project.

The Resident Engineer(s) compiled a weekly compliance report of his quality assurance activities and forwarded copies to the Vice President of the Power Supply Department, the Manager of Design and Construction, and the QAC Chairman.

TABLE 17.1.2-1 **[HISTORICAL]**
SYSTEMS AND EQUIPMENT QUALITY ASSURANCE GUIDE

1.0 Containment

A. Concrete and reinforcing steel which makes up the primary containment structure

B. Containment liner

C. Containment spray cooling system
   1. Pipe, fittings, and valves
   2. Pumps
   3. Instrumentation and controls

D. Containment penetrations
   1. Equipment
   2. Personnel
   3. Piping
   4. Electrical

E. Containment instrumentation

F. Containment isolation valves

G. Shielding

H. Containment atmospheric control system

2.0 Core Standby Cooling Systems

A. Safety injection system
   1. Pipe, fittings, and valves
   2. Pumps
   3. Tanks
   4. Instrumentation and controls

B. Residual heat removable system
   1. Pipe, fittings, and valves
   2. Pumps
   3. Heat exchangers
   4. Instrumentation and controls

3.0 Radioactive Processing Systems

A. Radioactive liquid waste system
   1. Pipe, fittings, and valves
   2. Pumps
   3. Tanks
   4. Evaporators
   5. Filters

TABLE 17.1.2-1 (Cont'd) **[HISTORICAL]**
SYSTEMS AND EQUIPMENT QUALITY ASSURANCE GUIDE

6. Heat exchangers
7. Instrumentation and control
8. Shielding

B. Radioactive gas waste system
1. Pipe, fittings, and valves
2. Tanks
3. Compressors
4. Instrumentation and controls
5. Shielding

4.0 Primary Coolant System

1. Pipe, fittings, and valves
2. Reactor coolant pumps
3. Instrumentation and controls
4. Reactor vessel
5. Reactor vessel internals
6. Core
7. Control rod drive, mechanisms and housings

5.0 Chemical and Volume Control System

1. Pipe, fittings, and valves
2. Pumps
3. Tanks
4. Demineralizers/filters
5. Evaporators
6. Heat exchangers
7. Instrumentation and controls

6.0 Refueling System

1. Liner
2. Fuel hoists/transfer assembly
3. Spent fuel pool and auxiliaries
4. Cask handling equipment
5. Shielding

7.0 Normal Auxiliary and Emergency Electrical Power Supply Systems

A. Emergency diesel generator
1. Diesel
2. Generator
3. Fuel system
4. Instrumentation and controls

TABLE 17.1.2-1 (Cont'd) **[HISTORICAL]**
SYSTEMS AND EQUIPMENT QUALITY ASSURANCE GUIDE

B. Cable

C. Transformers

D. Switchgear

8.0 Control Room

A. Concrete

B. Reinforcing steel

C. Ventilation system

D. Shielding

9.0 Radiation Monitoring System

INTENTIONALLY LEFT BLANK

17.1.3 WESTINGHOUSE PWR SYSTEMS DIVISION QUALITY ASSURANCE PLAN **[HISTORICAL]**

17.1.3.1 Quality Assurance Planning **[HISTORICAL]**

17.1.3.1.1 Purpose **[HISTORICAL]**

The Quality Assurance Plan of Westinghouse PWR Systems Division for the Nuclear Steam Supply System is set forth in this section. Its purpose was to describe the procedures and actions used by Westinghouse to assure that the design, materials and workmanship employed in the fabrication and construction of systems, components, and installations within the Westinghouse scope of responsibility in a nuclear power plant were controlled and met all applicable requirements of safety, reliability, operation, and maintenance.

This plan was a requirement for, but was not necessarily limited to, those components and systems of the plant having a vital role in the prevention or mitigation of the consequences of accidents which can cause undue risk to the health and safety of the public. These are Class I items listed in Section 3.2.

17.1.3.1.2 Procedural Documents and Work Instructions **[HISTORICAL]**

Written administrative and technical policies, procedures, and instructions were used in Westinghouse to implement the Quality Assurance Plan. They were in formats appropriate to their applications, such as:

a) Management responsibility statements

b) Position descriptions of management and professional personnel

c) Engineering instructions

d) Quality assurance and reliability procedures

e) Quality control notices

f) Quality control plans

g) Projects procedures

h) Purchasing manual procedures

i) Construction site procedures

Technical and contractual information to assure effective implementation of these policies and procedures was developed, documented, and controlled through a standard Westinghouse system which consisted in part of:

a) System design parameters

b) Equipment specifications

c) Corporate process specifications

d) Corporate material test specifications

e) Corporate Purchasing Department specifications (including specifications for materials)

f) Drawings

g) Purchase orders

Procedures were reviewed and revised on a continuing basis by the issuing authorities so that the procedures met the needs for which they were intended. Management reviewed performance in accordance with these procedures to assure compliance. Independent audits, as described later, provided objective assurance of both the adequacy of the procedures and compliance with them.

17.1.3.2 Organization **[HISTORICAL]**

Figure 17.1.3-1 shows the functional organization as it was related to quality assurance of the Westinghouse Nuclear Energy Systems Divisions, including the staff review and surveillance function of the Reliability Control Group at the Westinghouse corporate level. The Westinghouse organization provided the checks and balances needed to foster an effective overall quality assurance program.

The authority and responsibility of the manager of each activity on this organization chart was set forth in writing in an approved statement of management responsibility.

The PWR Systems Quality Assurance Department consisted of four sections: Mechanical Equipment, Pressure Vessels, Electrical, and Plant Quality Assurance. The Quality Assurance Department had responsibility for supplier surveillance, audits of the nuclear steam supply scope at construction sites, and quality assurance data feedback and analysis, as described elsewhere in this Plan. Other Westinghouse divisions were organized for independence of a quality assurance function, as shown in Figure 17.1.3-1.

The corporate Director of Reliability Control, who reported to Westinghouse top management through an organizational path independent of the Executive Vice President of Nuclear Energy Systems, was responsible for the surveillance and auditing of the quality assurance effort carried out by all the divisions in Westinghouse Nuclear Energy Systems. The Director of Reliability Control utilized the services of the PWR Systems Quality Assurance Department in carrying out audits of other activities in Nuclear Energy Systems.

PWR Systems Division was divided into a number of functional groups having both direct and indirect responsibility for aspects of the design, fabrication, and construction phases of the project. Close association and interchange of information at all levels existed among the functional groups.

Table 17.1.3-1 illustrates the relationships among these groups. Figure 17.1.3-2 shows this information in flow chart form. For example, contractual requirements originated in Projects and were distributed to Licensing and Reliability, system functional requirement groups, system design groups, and the equipment design and procurement groups. It can be seen that all aspects of the project were considered at each stage in the overall program, with the respective lead functional group coordinating the efforts of the associated functional groups.

Figure 17.1.3-2 and Table 17.1.3-1 are intended to show graphically the overall quality assurance program. For the sake of clarity, variations among functional groups have not been shown. Specifics of the functions were contained in the detailed documentation of the program.

17.1.3.3 Assurance of Design Adequacy **[HISTORICAL]**

17.1.3.3.1 Specification of Technical Requirements **[HISTORICAL]**

Engineering was responsible for designing or specifying equipment that conformed to the requirements of the application for which it was intended. This responsibility included the specification of quality control requirements that assured the equipment would function as required in the system and plant.

Systems Engineering designed the plant to meet functional, safety, and regulatory requirements. The component design engineers worked closely with systems engineering to identify equipment limitations and to resolve functional requirements with equipment capabilities. The design of equipment also provided for access to components for in-service inspection and maintenance as required to assure continued integrity throughout the life of the plant.

Written parameters were forwarded to component design engineers by systems engineering, detailing the design requirements for the specific plant. Equipment Specifications or drawings were prepared by the component design engineers to cover these requirements. The term "Equipment Specification" as used in this Quality Assurance Plan included drawings when they were used instead of Equipment Specifications. Detailed quality control requirements were specified in the Equipment Specification, or its references. Examples of these are nondestructive tests, acceptance standards, functional tests, and recording the measured values of key characteristics. In the few cases when Equipment Specifications or design drawings were not used, the specific quality control requirements, tests, and acceptance standards were identified in the purchase order.

17.1.3.3.2 Design Review for Compliance with Technical Requirements **[HISTORICAL]**

Preliminary Equipment Specifications were reviewed within Westinghouse by systems engineers, materials and process engineers, licensing engineers, Quality Assurance, Projects, and others as required. These independent reviews assured that Equipment Specifications met systems requirements, conformed to established engineering standards, were adequate from a metallurgical and welding point of view, met all code requirements, satisfied all safety requirements including those specified in safety analysis reports, contained necessary quality control requirements, and conformed with Carolina

Power & Light's contractual provisions. Written Engineering Instructions described the requirements of the review.

Aspects of the equipment design that had an effect on that part of the plant design performed by Ebasco were forwarded to them for their review. CP&L or Ebasco drawings which had an effect on Westinghouse's scope of supply were likewise sent to Westinghouse engineers for their review.

Technical requirements were provided in the bid package to qualified suppliers of components within the Westinghouse scope of responsibility. Suppliers' proposals responding to these bids were sent to engineering for review. The component design engineer evaluated the supplier's proposal for technical adequacy. He insisted on sufficient functional design data to make an independent review of the supplier's design to assure that the equipment would meet all requirements. Consultants from the Westinghouse Research and Development Laboratory and outside experts were also used to review specific design features, as required. The component design engineer reviewed how the supplier intended to meet the specified quality requirements. He reviewed the proposed equipment for its capability to perform its function for the design life of the plant.

Westinghouse did not permit exceptions in the proposal specifications that adversely affected the safety or reliability of the equipment.

Purchase requisitions prepared by the component engineer were the basis for purchase orders issued by Purchasing to suppliers. The purchase order was the official contract document that covered the technical requirements in the form of the equipment specification.

Purchase requisitions were reviewed by Component Engineering, System Engineering, Projects, and other functions, as necessary, to assure that technical requirements had been transmitted correctly to suppliers of the components.

Purchase orders required suppliers to submit detail drawings and manufacturing, inspection, and test procedures as the work under the purchase order progressed. This phase of the design was reviewed independently by Westinghouse component engineers. The written instructions for this phase were contained in an Administrative Specification and the Equipment Specification, which formed part of the purchase order.

17.1.3.3.3 Formal Design Reviews **[HISTORICAL]**

In addition to the routine reviews of technical requirements discussed above, formal design reviews were conducted by the Reliability Section on critical systems, subsystems, and components to improve their reliability and to reduce fabrication, installation, and maintenance costs. The design reviews were comprehensive, systematic studies by personnel representing a variety of disciplines who were not directly associated with the development of the product. Specialists from other Westinghouse divisions and outside consultants were used in the reviews as necessary. Information developed by the reviews was recorded for evaluation and action by the cognizant design engineer.

Not all equipment received this formal design review. The design review program was projected over a substantial period of time because of the comprehensive nature of each review. Selection of equipment to be reviewed was based on many considerations: relation to safety, effect on plant performance and availability, stage of design development, and others.

17.1.3.4 Supplier Quality Assurance **[HISTORICAL]**

17.1.3.4.1 Preaward Evaluation of Prospective Suppliers **[HISTORICAL]**

Prior to considering a new supplier for placement of a purchase order, a supplier evaluation was conducted. This was done in accordance with a written checklist. The results were documented in a report issued to management personnel of Purchasing, Engineering, Quality Assurance, and Projects. The evaluation was conducted by a team consisting of Purchasing, Engineering, and Quality Assurance. Other personnel such as material engineers, process engineers, and manufacturing engineers participated as required.

Considerations of the evaluation included:

a) Previous experience with the supplier

b) Physical plant facilities

c) Quality control program and system

d) Number and experience of design personnel

e) Material control and raw material inspection

f) In-process inspection

g) Assembly and test capability

h) Tool and gage control

i) Special processes required

j) Nondestructive testing

k) Inspection and test equipment

l) Records function

Deficiencies in the supplier's organization or systems were resolved with the supplier's management prior to placing a purchase order.

If an existing supplier did not maintain the quality level on Westinghouse orders, a similar team reviewed the supplier's problems and made recommendations to his management to correct the situation immediately. When problems arose, Westinghouse specialists aided the supplier in specific areas such as welding, manufacturing, and nondestructive testing to resolve the problem. In this manner, Westinghouse assured the continued high level of supplier performance necessary to obtain the quality level required by the contract.

17.1.3.4.2 Supplier Quality Control Requirements **[HISTORICAL]**

Quality requirements that applied specifically to a component were contained in the Equipment Specification. Requirements of a quality systems nature, not peculiar to a component, were contained in two standard documents.

The first, entitled "Administrative Specification for the Procurement of Nuclear Steam Supply System Components," was applied in all component purchase orders. The Administrative Specification required the supplier not only to manufacture equipment that conformed to purchase order requirements, but to assure himself and Westinghouse by means of appropriate inspections and tests that the equipment conformed to these requirements. The quality control section of this specification contained specific requirements in areas such as:

a) Calibration of measurement and test equipment

b) Control of drawings, specifications, procedures, and other documents used in design or manufacture, and revisions to these documents

c) Control and identification of material

d) Maintenance of quality control records

e) Test control through written test procedures and test records

f) Nonconforming supplies, including identification and control to preclude further use

The second document that specified quality requirements was, "Manufacturer's Quality Control Systems Requirements" (QCS-1). This document was applied to orders for more critical equipment such as components related to safety. This document required the supplier to maintain an adequate quality control system. This specification met the intent of Appendix IX of Section III of the ASME Boiler and Pressure Vessel Code in the area of quality control system requirements. QCS-1 required the following, among other things:

a) Establishment and maintenance of a system for the control of quality that assures that all supplies and services meet all specification, drawing, and contract requirements

b) Application of the system to subcontracted items

c) Written procedures that implement the system

d) Qualification of personnel

e) Qualification and control of processes including welding, heat treating, nondestructive testing, quality audits, and inspection techniques

f) Operation under a controlled manufacturing system such as process sheets, travelers, etc.

g) Written inspection plans for in-process and final inspection

h) Submittal of Inspection Checklists for approval by Westinghouse; these checklists show inspection and test status

i) Recording of results of each inspection operation

j) Repair procedures, with provision for Westinghouse approval of all procedures utilizing operations not performed in the normal manufacturing sequence

k) Written work and inspection instructions for handling, storage, shipping, preservation and packaging

As required, inspection hold points were specified by Westinghouse in the Equipment Specification or elsewhere in the purchase order. These were points of witness or inspection by Westinghouse beyond which work may not proceed without approval by Westinghouse.

17.1.3.4.3 Planning of Supplier Surveillance **[HISTORICAL]**

Westinghouse PWR surveillance of suppliers during fabrication, inspection, testing, and shipment of components was planned in advance and performed in accordance with written Quality Control Plans. These plans were prepared by Quality Assurance engineers and were based on the technical requirements of the purchase order. The plans were reviewed and approved by engineering.

The purpose of a Quality Control Plan was to provide planned guidance to the Quality Assurance field representative by focusing attention on those items which contribute most to quality and reliability; by providing specific instructions for the witnessing, documentation, and acceptance of the equipment; and for auditing to assure the supplier's compliance with all quality control requirements. The plan identified the points during manufacturing and testing that Quality Assurance was to witness.

The plan covered the auditing of the supplier's quality control system and operation procedures; surveillance of key operations such as welding, nondestructive testing, production, and nonoperating electrical testing; and inspection verification (for example, sampling review of radiographs, material test reports, key dimensions, and operating electric tests). Special emphasis was placed on the aspects of manufacture and inspection that most directly affected performance of the equipment. Lead units of a new design were given particular attention in the supplier's shop by both Quality Assurance and Engineering representatives.

When surveillance was indicated, Quality Assurance developed a visit schedule depending on the supplier's performance. Visits were more frequent during the initial stages of manufacture, particularly to a new supplier, with frequency diminishing as the supplier demonstrated his capability.

17.1.3.4.4 Surveillance of Suppliers **[HISTORICAL]**

The purpose of Westinghouse surveillance of suppliers was to provide Westinghouse management and customers first-hand objective assurance of compliance with specified requirements. The principle followed was that the supplier was responsible for inspecting and testing his product. The Westinghouse field representative assured that the supplier had done this,

rather than attempting to perform the supplier's inspection for him or duplicate the work he had done.

The frequency and scope of Westinghouse surveillance varied with criticality of equipment, supplier performance, complexity of the component, and other factors. This determination was made by Quality Assurance in conjunction with engineering. Quality Assurance residents were established as necessary.

Surveillance was accomplished in accordance with Quality Control Plans. In addition, the field representative confirmed on a continuing basis that the supplier's system was adequate to ensure that a quality product would be built. He assured that written instructions and procedures were kept current, application of drawings and specifications was controlled, that corrective action was implemented, and other necessary controls were effective.

The Quality Assurance representative informed the supplier directly of problems he discovered and obtained commitments to correct them. He brought these problems to the attention of the supplier's management as required to obtain resolution.

17.1.3.4.5 Release of Equipment for Shipment **[HISTORICAL]**

The Purchasing Administrative Specification required the supplier to write a formal shipping release when he was satisfied that purchase order requirements had been met. When the Westinghouse Quality Assurance representative was satisfied that the equipment could be released for shipment, and after receipt of the supplier's release, he prepared a Quality Control Release Form, and distributed copies to the supplier, buyer, and engineer. The equipment could then be released through normal engineering-purchasing channels for shipment.

17.1.3.5 Construction Site Quality Assurance **[HISTORICAL]**

17.1.3.5.1 Control of Site Work **[HISTORICAL]**

Work on nuclear steam supply equipment, as performed by the construction contractor and subcontractors, was monitored for conformance to written procedures and specifications which covered areas such as receiving, inspection, storage, cleanliness, erection, in-process and final inspection and quality control, and testing. Special processes such as welding, cleaning, and nondestructive testing were performed in accordance with written procedures by qualified personnel.

During component installation, Westinghouse Nuclear Power Service monitored work on nuclear steam supply and engineered safeguards equipment, and on critical structures. Qualified personnel provided technical advice on various disciplines of construction such as welding, mechanical and electrical system, instrumentation and control equipment, and startup.

Each man was responsible for overseeing that the Westinghouse nuclear steam supply equipment assigned to him was in good condition when received and that it was stored, handled, and installed properly according to applicable specifications, procedures, and manufacturers' instructions. Furthermore, he verified that the proper documents which record the critical actions and inspections associated with this work were prepared and filed.

The headquarters Quality Assurance group consisted of a staff organizationally separate from Nuclear Power Service. This group provided independent assurance that quality-related activities were done in accordance with specifications and procedures. Nuclear Power Service provided technical advice to the constructor during critical operations. Personnel from headquarters audited site activities and monitored records for adequacy.

A procedure described the system for identifying, reporting, and obtaining disposition of nonconforming material, equipment, or practices discovered at the site. Nuclear Power Service personnel filled out a Field Deficiency Report to provide the cognizant engineering group with the information necessary for making proper and timely disposition of each problem. After the cognizant personnel made a disposition, it was noted on the Field Deficiency Report and returned to the field for action. Files of these reports were maintained to record all field deficiencies and to provide for long-term corrective action. It was required that site personnel discontinue work on the nonconforming equipment until disposition was made.

17.1.3.5.2 Qualification of Westinghouse Personnel **[HISTORICAL]**

Nuclear Power Service welding engineers were qualified to Level II as required by the ASME Boiler and Pressure Vessel Code, Section III, Appendix IX.

Nuclear Power Service personnel who performed or directed the preoperational and functional testing were graduates of the Westinghouse Nuclear Operator training program.

17.1.3.6 Quality Control Records **[HISTORICAL]**

The Administrative Specification described above required suppliers to maintain records for each test (nondestructive, electrical, performance, etc.) specified in the purchase order. The record was required to show the test procedure, equipment and materials used, the acceptance standards applied, and the test results obtained. The part or assembly tested, date of test, and test operator identity was shown.

The administrative specification and equipment specification also required maintenance of other records as required, such as material test reports, welder qualifications, inspection records, etc. Records such as trip reports, deviation notices, and other quality-related documents formed a part of the Quality Assurance records maintained by Westinghouse.

Suppliers were required to maintain these records for specified periods, after which they notified Westinghouse so a record file for the life of the plant could be arranged. Suppliers were also required to transmit records to Westinghouse as work was completed for added assurance of record availability.

Records generated at the construction site were filed and maintained there.

17.1.3.7 Nonconforming Material, Trend Analysis and Corrective Action **[HISTORICAL]**

17.1.3.7.1 Deficiencies at Suppliers' Plants **[HISTORICAL]**

The Administrative Specification and QCS-1 described above contained specific contractual requirements for controlling nonconforming material or workmanship.

The supplier was required to physically identify all material that did not conform to purchase order requirements and to take necessary actions to preclude its further use. All deviations were documented in writing and reviewed by engineering, quality control, and other appropriate groups. First, consideration was given to restoring the material to its specified condition or scrapping it. If that was impractical, the deviation was considered from both an engineering and a quality control point of view. If acceptable, the deviation was formally approved in writing by the cognizant engineer. A permanent file of these records was maintained.

QCS-1 required that the supplier's quality system provided for the identification and evaluation of significant or recurring discrepancies and for alerting the supplier's cognizant management to the need for corrective action. The supplier had to review corrective action for effectiveness and the need for further action.

17.1.3.7.2 Deficiencies at the Construction Site **[HISTORICAL]**

A written procedure provided for documented reporting of deficiencies found during plant construction. These reports were submitted by site engineering personnel to the cognizant engineering department. Like reports from suppliers' plants, these reports were reviewed for necessary action, formally approved by the cognizant engineer and permanently filed.

17.1.3.7.3 Trend Analysis and Corrective Action **[HISTORICAL]**

Plant Quality Assurance analyzed all deficiency data on Westinghouse-supplied equipment received from suppliers and from construction sites to determine patterns of occurrence by supplier, component, or process. With this as a guide, Quality Assurance and cognizant engineers determined corrective actions that were needed to prevent recurrence. This action was in addition to assuring that the supplier or site personnel took corrective action of the individual deficiencies reported.

17.1.3.8 Audits **[HISTORICAL]**

17.1.3.8.1 Suppliers' Plants **[HISTORICAL]**

The Westinghouse audit function of suppliers is described in the Section 17.1.3.4, "Supplier Quality Assurance" above.

17.1.3.8.2 Construction Site **[HISTORICAL]**

Plant Quality Assurance was responsible for conducting independent audits of Nuclear Steam Supply System work at the construction site to assure that proper procedures and instructions were available and in use, and that adequate controls existed and were effective. Reports of audits were sent to top management of the PWR Systems Division.

17.1.3.8.3 Westinghouse Divisions **[HISTORICAL]**

The Westinghouse Corporation had a formal audit procedure which applied to the PWR System Division and all other divisions furnishing equipment or services to the nuclear industry as well as other areas. The audit program was under the direction of the corporate Director of Reliability Control who was organizationally independent from the operating divisions.

The purpose of the headquarters reliability control function was to provide an independent verification that the quality assurance programs of the Westinghouse divisions were effectively assuring that the product quality complied with the requirements of their customers and that the programs were using the most effective approaches to prevent the manufacture of defective products. In addition, this group assisted divisions in continually improving their quality control programs and provided help necessary to institute the recommended improvements identified in the audits.

Audits were performed of each division's quality assurance effort. An audit was usually performed by a two or three man team consisting of a member of the headquarters reliability control staff and the quality control manager of another division in the same product group as the division to be audited.

The audit normally took five days. The quality assurance systems and procedures that had been established by the division were reviewed to determine if these systems and procedures were sufficient to provide an effective program. Observations were then made to assure that the established systems and procedures were correctly being followed.

An oral presentation of the findings and conclusions of the audit was made to the Division General Manager, Quality Assurance Manager, and other personnel affected by the audit findings. The items recommended for improvement in the quality assurance program were presented as well as recommendations of approaches for accomplishing these improvements.

Following the audit, a written report containing the findings and recommendations reviewed in the oral report was prepared and sent to the attendees of the meeting. In addition, a copy of the report was sent to the Vice President to whom the division reported and to the Corporate Director of Manufacturing. This procedure assured that the attention of a high level of management was directed to actions needed to carry out the recommendations of the audit.

The Division Manager was responsible for reviewing the audit report and for taking action to improve the Quality Assurance Program in those areas identified in the report as requiring improvement. In addition, the Vice President sent a letter to each of his division managers after completion of the audits for his group asking for the status of implementation of corrective action for each item identified in the audit report. The answer was sent to the Vice President as well as the Corporate Reliability Control Staff. This reply provided a basis for further followup by the Corporate Reliability Control Staff to assure that the audit findings were acted upon.

TABLE 17.1.3-1 **[HISTORICAL]**

NUCLEAR ENERGY SYSTEMS FUNCTIONAL GROUPS QUALITY ASSURANCE FLOW CHART

FLOW PATH NO.	FLOW PATH DEFINITION	ORIGINATION FUNCTIONAL GROUP	PROJECT	LICENSING & RELIABILITY	SYSTEM FUNTIONAL REQUIREMENT GROUPS	SYSTEM DESIGN GROUPS	EQUIPMENT DESIGN & PROCUREMENT GROUPS	QUALITY ASSURENCE GROUPS	MATERIALS ENGINEERING GROUPS	ARCHITECH ENGINEER	EQUPMENT SUPPLIERS	CONSTRUCTORS	ON-SITE SERVICE & INSPECTION GROUPS	APPLICANT
			A	B	C	D	E	F	G	H	I	J	K	L
0	Design and Construction Follow and Approval (to and from all groups)	A	A*	B*	C*	D*	E*	F*	G*	H*	I*	J*	K*	L*
1	Contractual Requirements	A		B	C	D	E							
2	Safety Requirements	B				D	E							
3	Functional Requirements	C				D								
4	System Design	D		B	C									
5	Concurrence on Design	B				D		F						
6(a) 6(b)	Concurrence on System Design Design Review (Selected Critical Areas)	C F			C	D D	E		G				K	
7	Equipment Functional Requirements	D					E							
8	System Functional Requirements	D								H			K	
9	Quality Control Plan	F					E							
10	Equipment Specification (including Quality Control Requirements)	E		B		D		F	G					

* For clarity, not shown in Fig. 17.1.3-2

TABLE 17.1.3-1 (continued) **[HISTORICAL]**

FLOW PATH NO.	FLOW PATH DEFINITION	ORIGINATION FUNCTIONAL GROUP	PROJECT	LICENSING & RELIABILITY	SYSTEM FUNTIONAL REQUIREMENT GROUPS	SYSTEM DESIGN GROUPS	EQUIPMENT DESIGN & PROCUREMENT GROUPS	QUALITY ASSURENCE GROUPS	MATERIALS ENGINEERING GROUPS	ARCHITECH ENGINEER	EQUPMENT SUPPLIERS	CONSTRUCTORS	ON-SITE SERVICE & INSPECTION GROUPS	APPLICANT
			A	B	C	D	E	F	G	H	I	J	K	L
11	Concurrence on Equipment Specifications	BDFG					E							
12	Final Equipment Specifications	E				D		F			I		K	
13	(a) Design, (b) Manufacturing and Inspection Procedure	(a) I (b) E					E	F	G					
14	Concurrence of (a) design, (b) Manufacturing Inspection Procedures	(a) FG (b) E					E				I			
15(a)	Surveillance, Process Audits and Quality Control Plan Actions	F									I			
15(b)	Corrective Action, Follow through on Deficiencies	F											K	
16	Materials Evaluation	(a) I (b) E					E		G					
17	Materials Concurrence	(a) G (b) E					E				I			
18	System Layout	H		B		D	E							
19	Concurrence on System Layout	BDE								H				
20	Final System Layout and Field Follow	H										J		

TABLE 17.1.3-1 (continued) **[HISTORICAL]**

FLOW PATH NO.	FLOW PATH DEFINITION	ORIGINATION FUNCTIONAL GROUP	PROJECT	LICENSING & RELIABILITY	SYSTEM FUNTIONAL REQUIREMENT GROUPS	SYSTEM DESIGN GROUPS	EQUIPMENT DESIGN & PROCUREMENT GROUPS	QUALITY ASSURENCE GROUPS	MATERIALS ENGINEERING GROUPS	ARCHITECH ENGINEER	EQUPMENT SUPPLIERS	CONSTRUCTORS	ON-SITE SERVICE & INSPECTION GROUPS	APPLICANT
			A	B	C	D	E	F	G	H	I	J	K	L
21	Inspection and Erection, Requirements and Procedures	J					E	F	G				K	
22	Concurrence on Inspection and Erection, Requirements and Procedures	EFKG										J		
23	Equipment for Receipt Inspection	I											K	
24	Final Equipment Inspection and Erection, Requirements and Procedures	K										J		
25	Erection Follow	K										J		
26	System Installed	J											K	
27	Testing Requirements and Procedures	D		B	C		E							
28	Concurrence of Testing Requirements and Procedures	BCE				D								
29	Final Testing Requirements and Procedures	D											K	
30	System Performance Test Procedures	K		B	C	D								
31	Concurrence on System Performance	BCD											K	

TABLE 17.1.3-1 (continued) **[HISTORICAL]**

FLOW PATH NO.	FLOW PATH DEFINITION	ORIGINATION FUNCTIONAL GROUP	PROJECT	LICENSING & RELIABILITY	SYSTEM FUNTIONAL REQUIREMENT GROUPS	SYSTEM DESIGN GROUPS	EQUIPMENT DESIGN & PROCUREMENT GROUPS	QUALITY ASSURENCE GROUPS	MATERIALS ENGINEERING GROUPS	ARCHITECH ENGINEER	EQUPMENT SUPPLIERS	CONSTRUCTORS	ON-SITE SERVICE & INSPECTION GROUPS	APPLICANT
			A	B	C	D	E	F	G	H	I	J	K	L
32	Handing over fo Completed Plant	K												L
33	Operating and Emergency Instructions	D		B	C		E							L
34	Concurrence on Operating and Emergency Instructions	BCEL				D								
35	Final Operating and Emergency Instructions	D											K	L
36	Technical Specifications	B			C	D	E		G				K	L
37	Concurrence on Technical Specifications	CDEGKL		B										
38	Final Technical Specifications	B								H				L
39	Plant Operation Information	L											K	
40	Plant Operation Information (to all Appropriate Westinghouse Groups	K	A*	B*		D*	E*		G*				K*	
41	Audit of Site Quality Assurance	F											K	
42	Analysis of Plant Operating and Maintenance Information	F		B		D	E		G		I			

* For Clarity, not shown in Fig. 17.1.3-2

17.1.4 EBASCO ORGANIZATION AND ADMINISTRATION **[HISTORICAL]**

The Quality Compliance Section, staffed by capable and experienced personnel, was divided into the two principal operations of home office and field.

The administration and implementation of quality compliance for vendors and field site operations was the responsibility of the Ebasco Materials Engineering and Quality Compliance Department. This department, which was headquartered in New York, was under the direction of the departmental manager.

This department was established so that the manager reported directly to the Vice President - Nuclear Engineering. Reporting to the manager were four sections of interrelated technical disciplines: Quality Compliance, Welding and Joining, Materials and Metallurgy, and Nondestructive Testing. Each of the sections had an engineering supervisor in charge. The Quality Compliance Section Engineering Supervisor had reporting to him a Quality Compliance Engineer who was responsible for the organization and direction of the field site quality compliance supervisor and vendor quality compliance representatives. The quality compliance section called upon the skill of the other three sections as well as company engineering departments to assist in writing quality compliance manuals, instruction procedures, nondestructive testing procedures, materials specifications, welding procedures, and quality compliance procedures.

The Ebasco Quality Compliance Organization is shown in Figure 17.1.4-1.

17.1.4.1 Home Office **[HISTORICAL]**

The responsibility of the Home Office Quality Compliance Engineer was to:

a) Establish a quality compliance program for the project

b) Perform liaison with the CP&L Project Manager, the nuclear steam generating system supplier, and regulatory agencies in the formulation and compliance of the quality compliance program

c) Review applicable specifications, revisions, and amendments prepared by the Engineering Department prior to issue. This review pertained to the quality compliance requirements, number and type of tests required, validity and feasibility of test methods incorporated in the specifications, documentation requirements, and applicable code requirements

d) Review bidding documents to assure that proper Quality Compliance requirements are contained therein

e) Set up "inspection scope" pertinent to the specification

f) Review purchase orders to determine that all Quality Compliance requirements are contained therein

g) Review Vendors' Quality Compliance procedures pertinent to the purchased item(s). Approve or request changes in these procedures

h) Set up manufacturer's facilities surveys and schedule plant or source visits

i) Set up final "inspection scope" for each specification and order and inform the supplier of these requirements. The inspection scope was determined by:

1) Specification requirements

2) Criticality and sophistication of item

3) Vendor's history of performance

4) Results of Manufacturer's facilities survey

j) Perform liaison duties between home office and field quality compliance groups, engineering, purchasing, expediting, and construction relating to implementation of the quality compliance program

k) Maintain during vendor fabrication quality compliance work records and documentation

17.1.4.2 Field **[HISTORICAL]**

The field quality compliance supervisor reported to the construction project manager in matters relating to schedule priority. However, he was responsible to the Manager of Materials Engineering and Quality Compliance in matters relating to administration and technical control.

The responsibilities of the Field Quality Compliance Group were as follows:

a) Review specifications to determine quality compliance requirements and scope of duties pertinent to items purchased and received at the site

b) Carry out inspections necessary to assure that materials and construction conform to the requirements and intent of the applicable specifications and drawings

c) Work with the Home Office Quality Compliance Engineer in carrying out Vendor surveillance and inspection program

d) Receive, review and/or prepare all necessary documentation pertinent to quality or materials and workmanship and maintain these documents in a logical, available, and complete manner

The Ebasco Project Organization Quality Compliance Relationships are shown on Figure 17.1.4-2.

17.1.4.3 Records **[HISTORICAL]**

The Field Quality Compliance Group was responsible for maintaining all records pertinent to and necessary for the quality compliance of materials and workmanship associated with the project. These records were maintained throughout construction and final testing. At the completion of the project these records were turned over to the Owner. Throughout the course of the construction project, the records were available for review by the Owner, regulatory agencies, and/or their authorized representatives.

The Home Office Quality Compliance Engineer and Field Quality Compliance Supervisor developed the "filing system" at the beginning of the project. The files were set up numerically by plant system heading, such as the Auxiliary Coolant System, with subheadings pertaining to each line designation within the system and by building. The numbers used were the same as the applicable specification which was also the purchase order number for the equipment or service applicable.

Piping welding records were organized by system with system packages containing (but not limited to) material certifications, shop inspection and test documentation, performance test records, field welding records, nondestructive testing reports, and radiographs. These records were maintained as the work progressed and all data was assembled into the final package when the system was completed.

Where an item was used "across the project" (such as reinforcing steel) separate records were maintained in a "General" category.

17.1.4.4 Scheduling **[HISTORICAL]**

All quality compliance work was scheduled to maintain coordination with the construction, scheduling, engineering, and purchasing groups connected with the project. Field use of computer printouts was made in this regard for long range scheduling, using separate sortings where helpful.

17.1.4.5 Details of Quality Control and Inspection Work **[HISTORICAL]**

17.1.4.5.1 Ebasco Purchased Items - Vendor Surveillance **[HISTORICAL]**

Where vendor plant surveillance was necessary a program was organized and implemented according to the following plan:

a) The purchase order was reviewed to determine that all quality compliance requirements were contained or referenced therein.

b) Vendor's quality control procedures for the subject item(s) were reviewed.

c) A Manufacturer's Facilities Survey was made to assure vendor's capability and to determine his understanding regarding quality compliance documentation and test requirements.

d) The extent of shop inspection necessary to assure compliance with terms and intent of the order was determined.

e) During vendor inspections, in addition to the specific purpose of the inspection (e.g., witnessing shop tests or reviewing radiographs), the quality compliance representative:

1) Reviewed applicable mill test reports and certifications for full compliance to specification requirements

2) Reviewed techniques and procedures for required inspection methods and tests

3) Determined that vendor quality control procedures were being carried out as approved

f) Prior to any vendor surveillance, the Field or the Home Office Quality Compliance Engineer prepared an "Inspection Checklist" for the quality compliance or factory representative making the visit. This list contained specific details to be checked during the visit, including dimensional tolerances, test procedures, test pressures, applicable codes, etc. The Quality Compliance Engineer saw to it that the representative had in his possession at the time of the visit all necessary inspection tools, specifications and codes, and that applicable drawings were available.

17.1.4.5.2 Site Quality Compliance - Structural **[HISTORICAL]**

The following items were performed to assure the site Quality Compliance of structural materials:

a) Concrete Materials Approvals and Mix Designs - All materials entering into production of structural concrete for the project were sampled and tested in full accordance with project specification requirements and applicable ASTM and American Concrete Institute standards prior to any placement of concrete in the permanent structures.

b) Mill test certificates were required and reviewed for all cement used on the project. Separate storage facilities were maintained at the batch plant so that no mixing of cement types or brands took place.

c) Concrete aggregates were periodically sampled and tested. The batch plant was inspected to ascertain that only previously approved aggregates were used.

d) The concrete batch was inspected for conformance to ASTM C-94. During concreting operations, the batch plant was checked to determine that approved mixes were being batched and all batching was being done in accordance with project specifications.

e) All concreting operations were inspected in the field including forms, reinforcing, placing, curing, and stripping. Slump tests, air content checks, and concrete cylinders were made as required.

f) All concrete materials testing, design mixes, batch plant inspection, site inspection, and cylinder testing were performed by an independent testing laboratory hired by the contractor.

g) Mill test reports for reinforcing steel were required and reviewed covering each heat of material supplied. Material was inspected upon receipt at the site for identification marks and condition.

h) For Cadweld Splices, mill test reports covering sleeves and cartridges were required. Storage areas for these items were checked to assure that no deterioration had taken place. All operator qualifications records were maintained. All production splices were visually inspected and samples randomly selected for testing to destruction. A log of all test results was maintained and results charted.

i) Mill test reports for structural steel were required and reviewed. When received at the site, material was inspected for proper identification and condition. Where shop fabrication was required, a vendor surveillance program was set up as described previously. Erection of structural steel was subject to inspection as required. All connections were particularly checked for soundness and tightness.

j) For field welding of structural steel, welding procedure tests and operator certifications were checked for conformance to applicable specifications of the American Society of Mechanical Engineers (ASME), the American Welding Society (AWS), or Ebasco. Where field qualification tests for procedures of performance were required, these were witnessed by a representative of the Quality Compliance Group. Field welds were inspected and where required, nondestructive tests were performed, witnessed, or reviewed by a representative of the Quality Compliance Group. Radiographs were reviewed and a report of the tests and the radiographs was maintained in the Quality Compliance file.

k) Particular attention was placed on the fabrications of the containment liner. Mill test reports were checked and became a part of the permanent Quality Compliance file. Welding procedure and welder qualifications were checked and certifications became a part of the permanent Quality Compliance file. Welding records and nondestructive testing were audited and nondestructive test reports were reviewed. These tests included the leak testing of the leak detection channels.

Procedures for the final containment pressurizations and test were reviewed and this test was witnessed.

17.1.4.5.3 Site Quality Control - Mechanical Equipment **[HISTORICAL]**

The following items were performed to assure the site quality control of mechanical equipment:

a) A receiving inspection was performed for Ebasco and Westinghouse material. Items were checked when received at the site for damage, sealing, and generally to determine if the item was ready for installation. Records and documentation as defined in this section were required to be on site and acceptable prior to installation.

b) On safety related items, the Field Quality Compliance Supervisor prepared a checklist of inspection requirements, limiting factors, and acceptance criteria. These inspections were required to be completed with satisfactory results prior to acceptance into the structure.

c) Nondestructive tests (including pressure and leak rate) required by the specifications were witnessed or reviewed by a member of the Quality Compliance Group. Radiographs were reviewed and a report of the test and the radiographs was maintained in the Quality Compliance file.

d) Field welding on mechanical equipment was subject to the same criteria as noted under "Field Welding of Structural Steel." Records and all radiographs became a part of the Quality Compliance file.

e) The cleanliness of mechanical equipment was carefully checked in full accordance with project specifications.

f) During the course of field welding on the piping systems, a "Record and Schedule of Field Welds" was maintained and available for checking progress.

17.1.4.5.4 Site Quality Compliance - Electrical, Instrumentation, and Controls **[HISTORICAL]**

The following items were performed to assure the site quality compliance of electrical, instrumentation, and controls:

a) A receiving inspection was performed for Ebasco and Westinghouse supplied equipment. Items were inspected when received at the site for damage to the crating or equipment and for proper identification. Records and documentation as defined in this section were required to be on site and acceptable before installation.

b) The inspection of installation was primarily a check of the workmanship in mounting and wiring the equipment to code and specification requirements.

c) After installation, components were given preoperational checks by testing for their proper electrical and mechanical functions without energizing the equipment. These tests were conducted to applicable standards of the American Standards Association (ASA), the Institute of Electrical and Electronic Engineers, Inc. (IEEE), and the National Electrical Manufacturer's Association (NEMA) in addition to the "Startup Checklist for Electrical Equipment".

d) Operational checks were also performed. After successful preoperational tests, equipment was further checked for proper mechanical and/or electrical functions with the equipment energized. Tests were conducted in accordance with applicable ASA, IEEE, and NEMA standards and the "Startup Check List for Electrical Equipment".

17.1.4.5.5 Site Quality Compliance - Piping **[HISTORICAL]**

The following items were performed to assure the site quality compliance of piping:

a) A receiving inspection was performed for Ebasco and Westinghouse supplied material. Piping was checked when received at the site for damage, sealing, and cleanliness. Records and documentation as defined in this section were required to be on site and acceptable before installation.

b) All welders and welding procedures were certified in accordance with ASME Code requirements. For those welders or procedures requiring field certifications, tests for certification were witnessed by a representative of the Quality Compliance Group. Qualification records became a part of the Quality Compliance file.

c) Field welds in critical systems and others where required were numbered and these numbers became the permanent identification of the joint.

d) Nondestructive testing (including pressure and leak tests) were witnessed or reviewed by the Quality Compliance Group. Radiographs were reviewed by the Quality Compliance Group.

e) The cleanliness of the piping systems was carefully checked in full accordance with project specifications.

17.1.4.5.6 Work Stoppage - Unacceptable Items **[HISTORICAL]**

Any item which in any way did not meet the quality compliance requirements of the specifications was required to be noted as unacceptable. The Quality Compliance Supervisor immediately informed the Construction Superintendent of this fact. The method of repair or replacement of the item was determined in accordance with specification requirements. The replacement was subject to the same quality compliance requirements as the original item. Repair of the item was in accordance with an approved procedure and this procedure defined the quality compliance requirements necessary for acceptance.

If a condition arose wherein the Quality Compliance Engineer determined that project work must be stopped in order to preserve the quality of the project, he so informed the Construction Superintendent, Construction Manager, Project Manager, and the CP&L representative, and the proper course of action was established and implemented. Any conflict in decisions was immediately reported to the home office Manager, Materials Engineering and Quality Compliance for resolution.

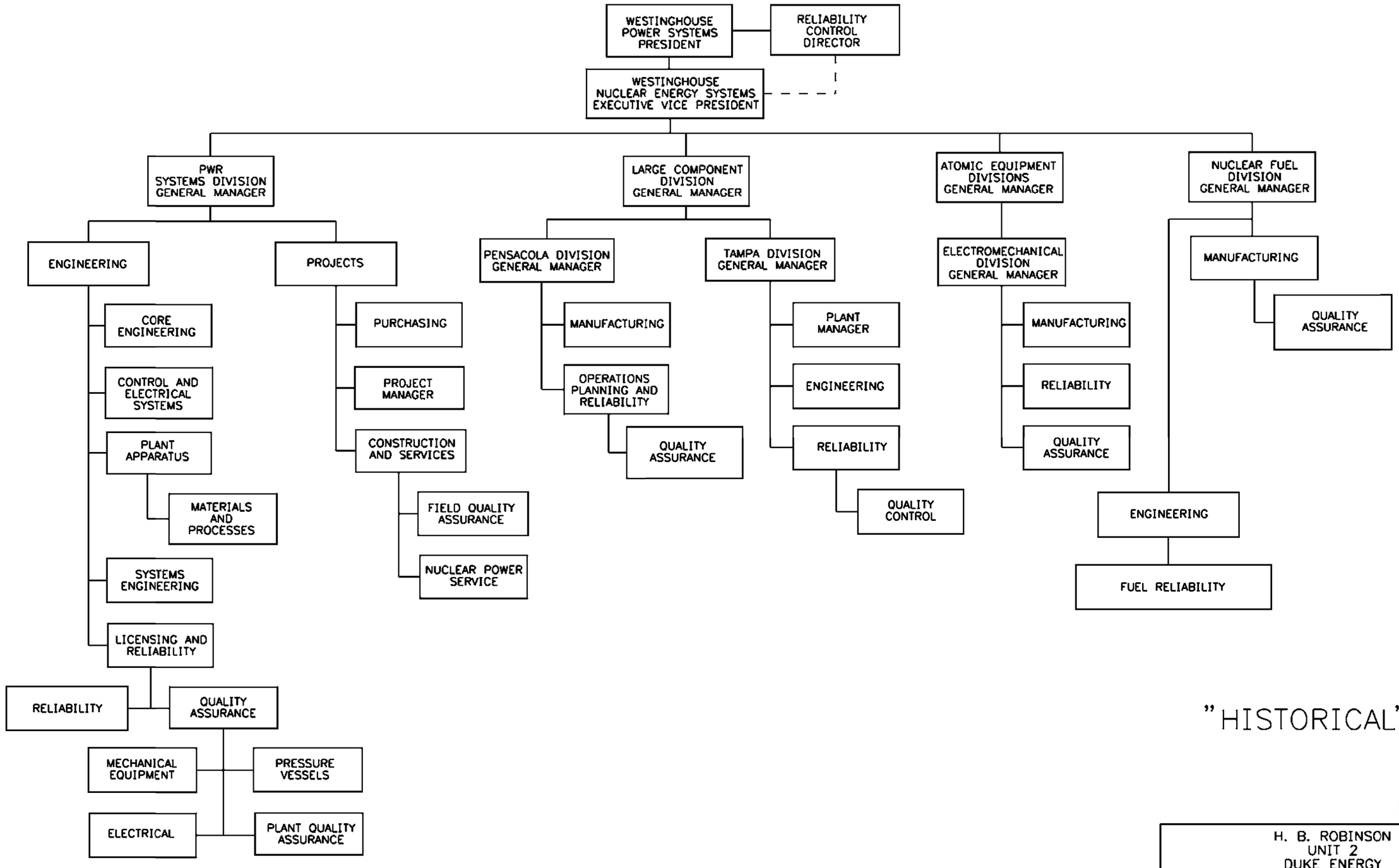

"HISTORICAL"

REVISION 27

H. B. ROBINSON
UNIT 2
DUKE ENERGY
UPDATED FINAL SAFETY ANALYSIS REPORT

QUALITY ASSURANCE FUNCTIONAL ORGANIZATION FOR WESTINGHOUSE NUCLEAR ENERGY SYSTEMS
FIGURE 17.1.3-1

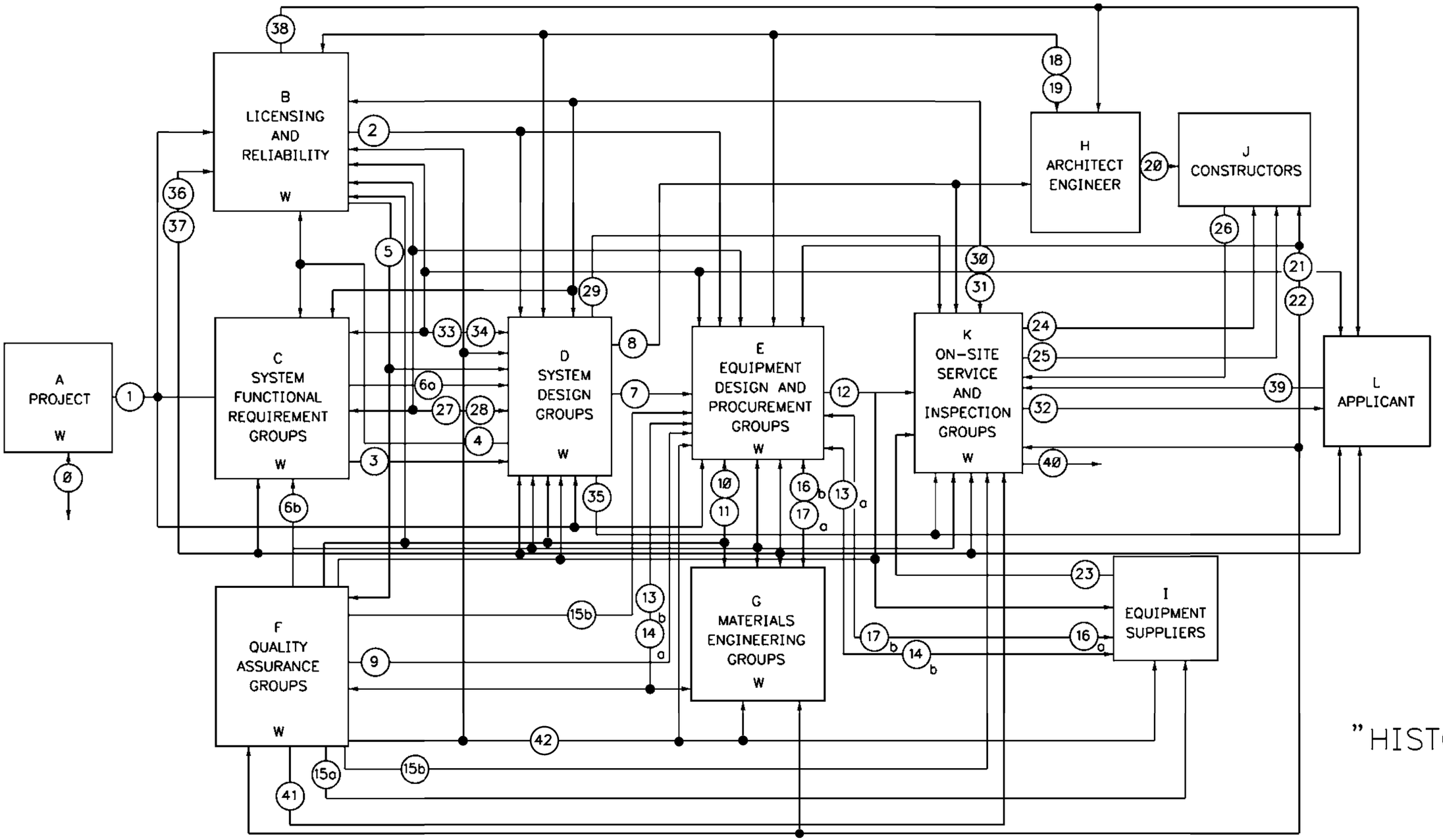

"HISTORICAL"

REVISION 27

H. B. ROBINSON
UNIT 2
DUKE ENERGY
UPDATED FINAL SAFETY ANALYSIS REPORT

NUCLEAR ENERGY SYSTEMS FUNCTIONAL
GROUPS QUALITY ASSURANCE
SCHEMATIC FLOW DIAGRAM
FIGURE 17.1.3-2

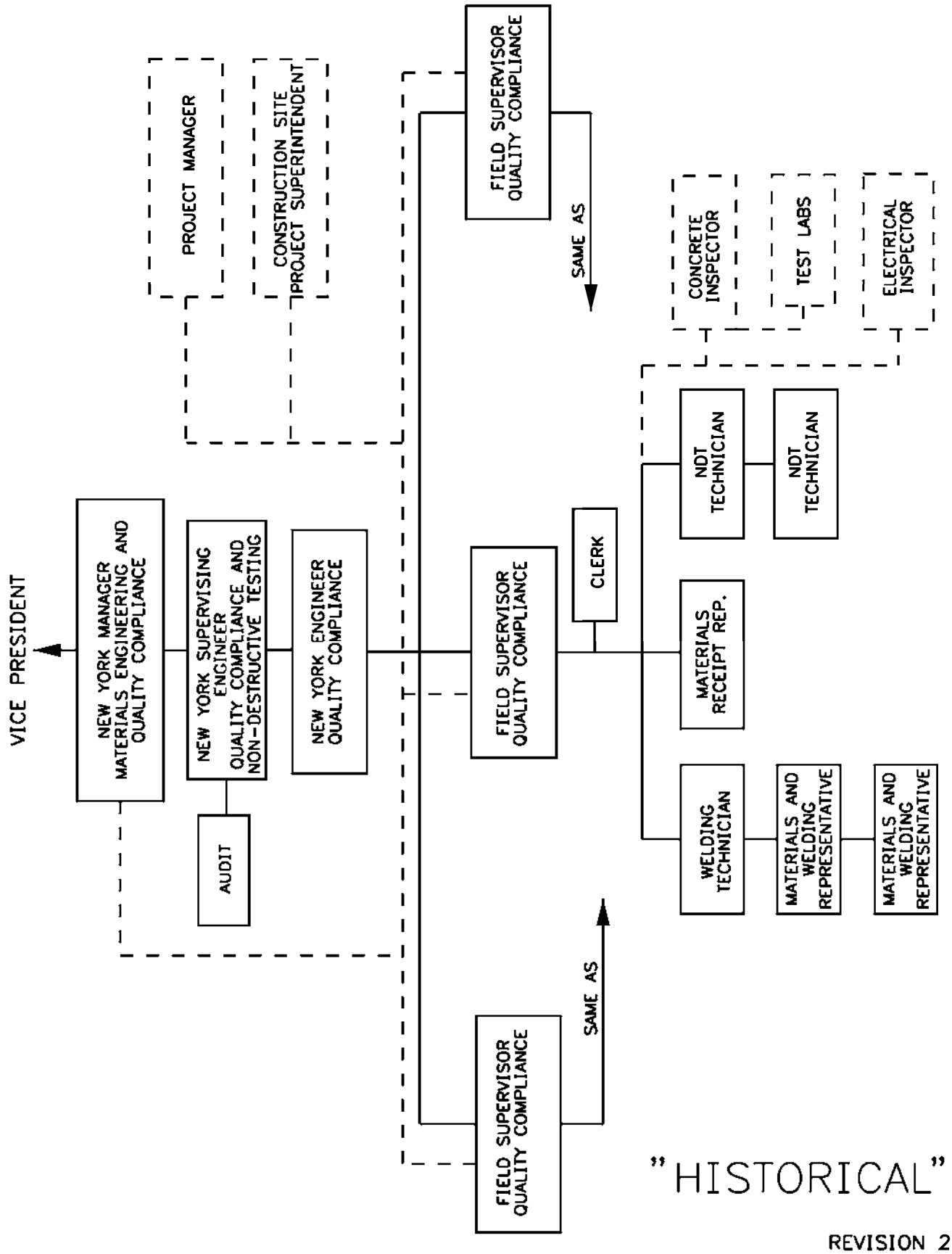

REVISION 27

H. B. ROBINSON UNIT 2 DUKE ENERGY UPDATED FINAL SAFETY ANALYSIS REPORT	MATERIALS ENGINEERING AND QUALITY COMPLIANCE FIELD SITE OPERATIONS	FIGURE 17.1.4-1

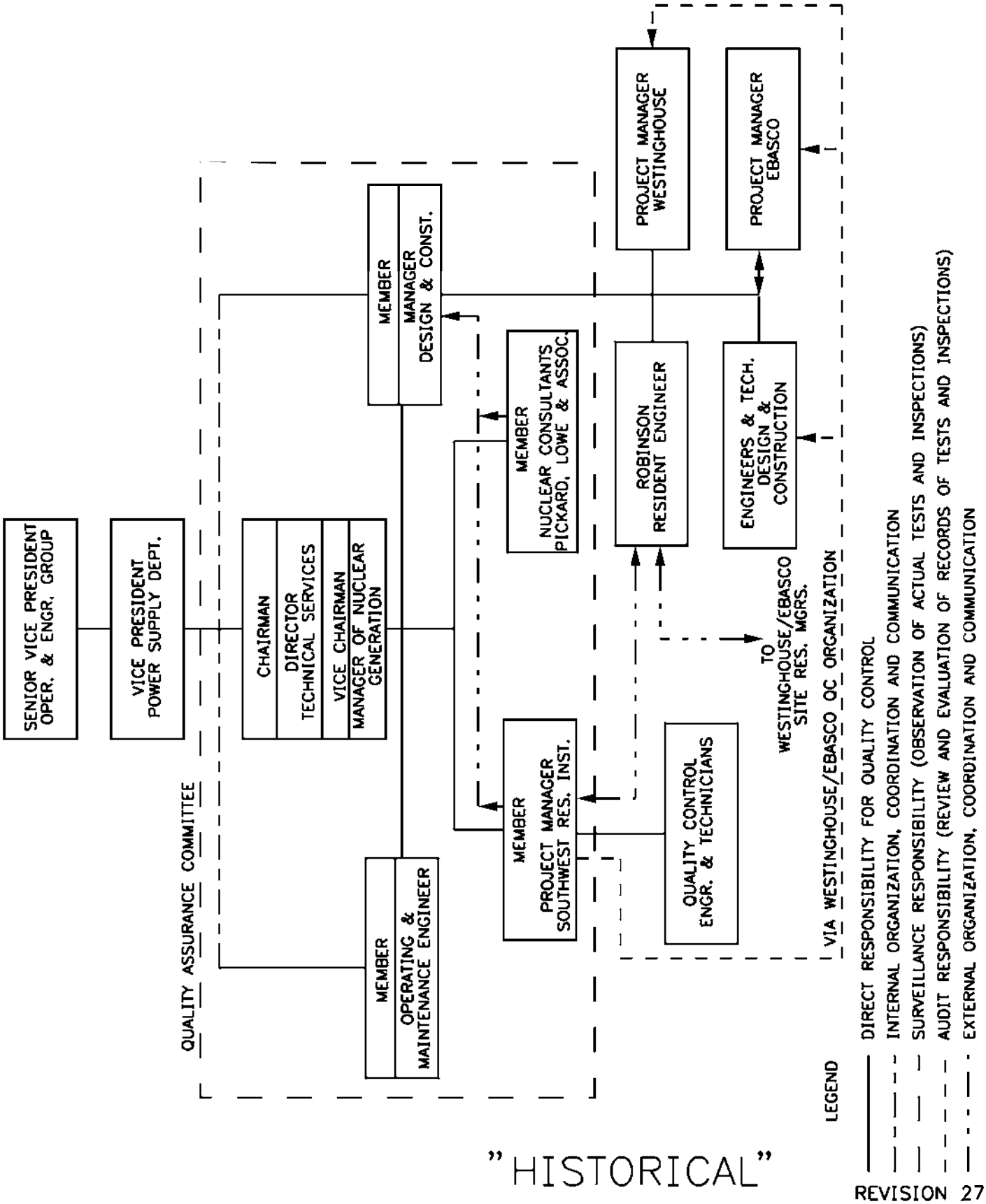

H. B. ROBINSON UNIT 2 DUKE ENERGY UPDATED FINAL SAFETY ANALYSIS REPORT	ORGANIZATION H. B. ROBINSON QUALITY ASSURANCE COMMITTEE	FIGURE 17.1.4-2

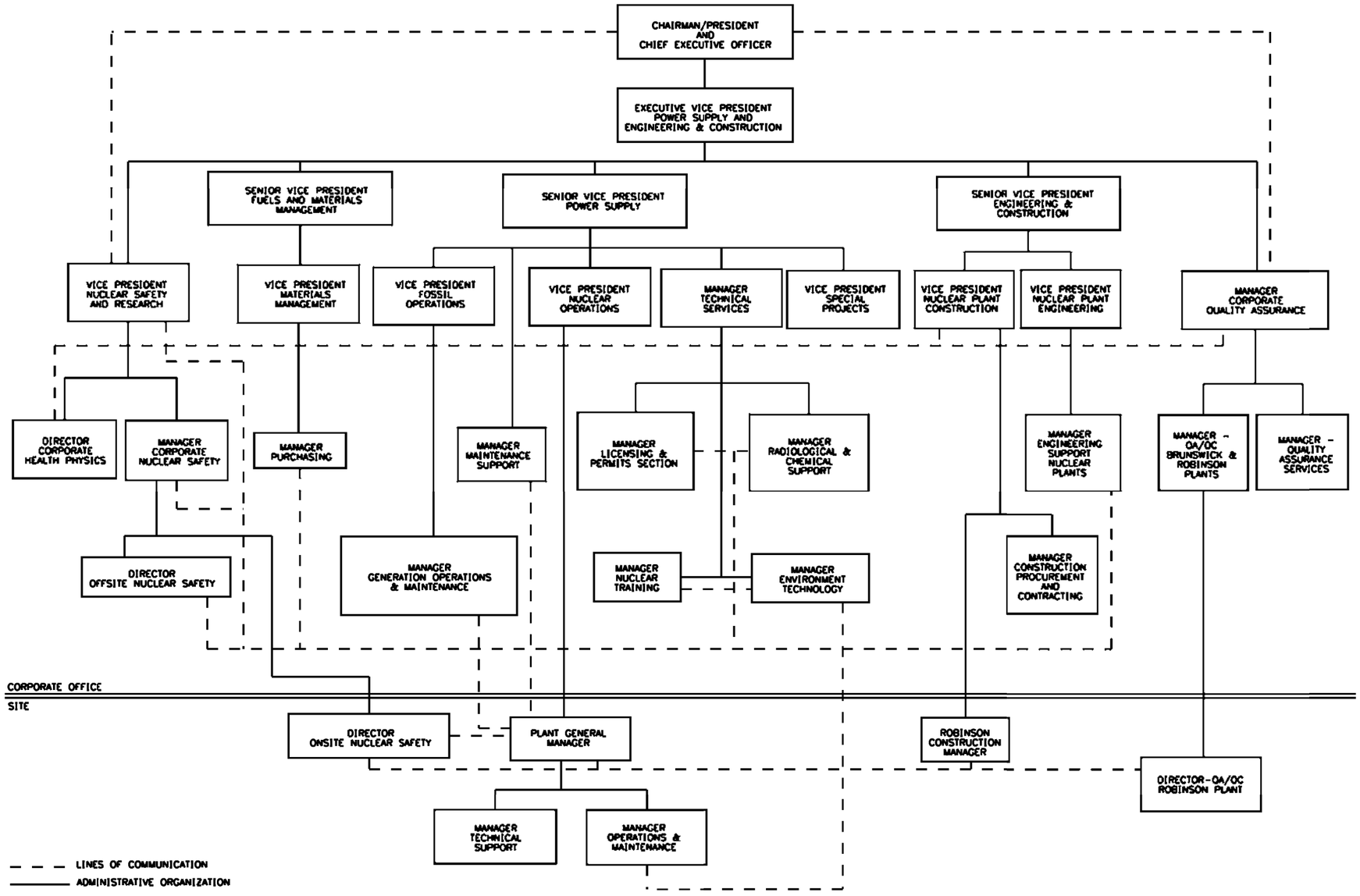

"HISTORICAL"

REVISION 27

H. B. ROBINSON
UNIT 2
DUKE ENERGY
UPDATED FINAL SAFETY ANALYSIS REPORT

DUKE ENERGY ORGANIZATION FOR THE OPERATION MAINTENANCE AND MODIFICATION
FIGURE 17.1.4-3

Section 17.2 was deleted by Revision No. 13

17.3 RNP Quality Assurance Program Description

The description of the Quality Assurance Program is contained in the Duke Energy Corporation Topical Report Quality Assurance Program Description Operating Fleet, DUKE-QAPD-001. That Topical Report follows the format and content guidance of NUREG-0800 Section 17.3 except it is based on ANSI N18.7-1976 in lieu of ANSI/ASME NQA-1 and NQA-2.

Topical Report DUKE-QAPD-001 is incorporated by reference into the UFSAR.