Choosing the I/O Type

Two types of CPU modules are available:

- Basic CPUs with discrete-only inputs a outputs.
- Analog CPUs with both discrete and ar inputs and outputs.

All CLICK CPU modules offer the same performance, use the same instruction set, and support all optional I/O modules.

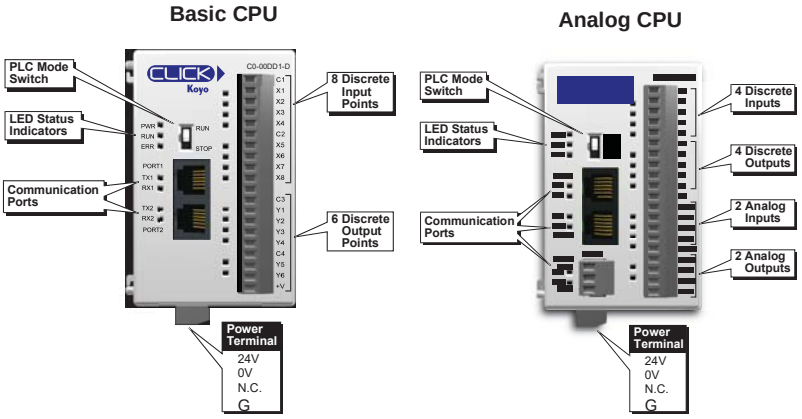

Basic CPU Modules

The Basic CLICK CPU modules are available with different combinations of built-in I/O types (i.e. DC input/DC output, DC input/relay output, and AC input/relay output). With the 14 built-in I/O points (8 inputs/6 outputs), the CPU can be used as a ready-to-go PLC control system without any additional I/O modules. The CPU module just needs 24 VDC, but it can be expanded in the future if the need arises.

Basic CLICK CPUs			
Part Number	**Discrete Input Type**	**Discrete Output Type**	**External Power**
C0-00DD1-D	8 DC (sink/source)	6 DC (sink)	24VDC (required for all CPUs)
C0-00DD2-D	8 DC (sink/source)	6 DC (source)	
C0-00DR-D	8 DC (sink/source)	6 Relay	
C0-00AR-D	8 AC	6 Relay	

Built-in I/O (Basic CPUs)

There are 4 different configurations of I/O types available for Basic CLICK CPU modules. The table lists the part numbers showing the various I/O type combinations.

Analog CLICK CPUs			
Part Number	**Discrete Input/Output Types**	**Analog Input/Output Types**	**External Power**
C0-02DD1-D	4 DC in / 4 DC sinking out	2 ch in / 2 ch out (current/voltage selectable)	24VDC (required for all CPUs)
C0-02DD2-D	4 DC in / 4 DC sourcing out	2 ch in / 2 ch out (current/voltage selectable)	
C0-02DR-D	4 DC in / 4 relay out	2 ch in / 2 ch out (current/voltage selectable)	

Analog CPU Modules

The Analog CLICK CPU modules are available with different combinations of DC in, DC sinking, sourcing or relay out, and analog in and out.

They also have an RS-485 port for Modbus and ASCII communications, and the battery backup feature which will retain the data in SRAM for 5 years.

Built-in I/O (Analog CPUs)

There are three different configurations of I/O types available for the Analog CLICK CPU modules. The table lists the part numbers showing the various I/O types.

Discrete I/O Modules

A variety of I/O modules are available for the CLICK PLC System. Up to 8 I/O modules can be connected to a CLICK CPU module to expand the system I/O count and meet the needs of a specific application. Complete I/O module specifications and wiring diagrams can be found later in this section. The table lists the discrete option modules that are supported by the CLICK PLC.

Discrete I/O Modules						
Part Number	**Inputs**			**Outputs**		
	I/O Type/ Number/ Commons	**Sink or Source**	**Voltage Ratings**	**I/O Type/ Number/ Commons**	**Sink or Source**	**Voltage/Current Ratings**
C0-08ND3	DC/8/2	Sink or Source	12-24 VDC			
C0-08ND3-1	DC/8/2	Sink or Source	3.3-5 VDC			
C0-16ND3	DC/16/4	Sink or Source	24 VDC			
C0-08NA	AC/8/2	N/A	100-120 VAC			
C0-08TD1				DC/8/2	Sink	3.3-27 VDC, 0.3 A
C0-08TD2				DC/8/1	Source	12-24 VDC, 0.3 A
C0-16TD1				DC/16/2	Sink	5-27 VDC, 0.1 A
C0-16TD2				DC/16/2	Source	12-24 VDC, 0.1 A
C0-08TA				AC/8/2	N/A	17-240 VAC, 0.3 A
C0-04TRS				Relay/4/4	N/A	24 VDC, 7 A 240 VAC, 7 A
C0-08TR				Relay/8/2	N/A	24 VDC, 1 A 240 VAC, 1 A

CLICK Specifications

General Specifications For All CLICK PLC Products

These general specifications apply to al CLICK CPUs, optional I/O modules, and optional power supply products. Please refer to the appropriate I/O temperature derating charts under both the CPU and I/O module specifications to determine best operating conditions based on the ambient temperature o your particular application.

General Specifications	
Power Input Voltage Range	20-28 VDC
Maximum Power Consumption	5 W (No 5 V use from communication port)
Maximum Inrush Current	30 A (less than 1ms)
Acceptable External Power Drop	Max 10 ms
Operating Temperature	32°F to 131°F (0°C to 55°C), IEC 60068-2-14 (Test Nb, Thermal Shock)
Storage Temperature	–4°F to 158°F (–20°C to 70°C) IEC 60068-2-1 (Test Ab, Cold) IEC 60068-2-2 (Test Bb, Dry Heat) IEC 60068-2-14 (Test Na, Thermal Shock)
Ambient Humidity	30% to 95% relative humidity (non–condensing)
Environmental Air	No corrosive gases. Environmental pollution level is 2 (UL840)
Vibration	MIL STD 810C, Method 514.2, EC60068-2-6 JIS C60068-2-6 (Sine wave vibration test)
Shock	MIL STD 810C, Method 516.2, IEC60068-2-27, JIS C60068-2-27
Noise Immunity	Comply with NEMA ICS3-304, Impulse noise 1µs, 1000V EN61000-4-2 (ESD), EN61000-4-3 (RFI), EN61000-4-4 (FTB) EN61000-4-5 (Surge), EN61000-4-6 (Conducted) EN61000-4-8 (Power frequency magnetic field immunity) RFI: No interference measured at 150, 450 MHz (5w/15cm)
Emissions	EN55011:1998 Class A
Agency Approvals	UL508 (File No. E157382, E316037); CE (EN61131-2)
Other	RoHS instruction conformity

CPU Module Specifications

These specifications apply to a the CPU modules.

CPU Module Specifications		
	Basic CPU	**Analog CPU**
Control Method	Stored Program/Cyclic execution method	
I/O Numbering System	Fixed in Decimal	Fixed in Decimal
Ladder Memory (steps)	8000	8000
Total Data Memory (words)	8000	8000
Contact Execution (boolean)	< 0.6 us	< 0.6 us
Typical Scan (1k boolean)	1-2 ms	1-2 ms
RLL Ladder Style Programming	Yes	Yes
Run Time Edits	No	No
Scan	Variable / fixed	Variable / fixed
CLICK Programming Software for Windows	Yes	Yes
Built-in Communication Ports	Yes (two RS-232 ports)	Yes (2 RS-232 and 1 RS-485 ports)
FLASH Memory	Standard on CPU	Standard on CPU
Built-in Discrete I/O points	8 inputs, 6 outputs	4 inputs, 4 outputs
Built-in Analog I/O Channels	No	2 inputs, 2 outputs
Number of Instructions Available	21	21
Control Relays	2000	2000
System Control Relays	1000	1000
Timers	500	500
Counters	250	250
Interrupt	Yes (external: 8 / timed: 4)	Yes (external: 4 / timed: 4)
Subroutines	Yes	Yes
For/Next Loops	Yes	Yes
Math (Integer and Hex)	Yes	Yes
Drum Sequencer Instruction	Yes	Yes
Internal Diagnostics	Yes	Yes
Password Security	Yes	Yes
System Error Log	Yes	Yes
User Error Log	No	No
Memory Backup	Super Capacitor	Super Capacitor + Battery
Battery Backup	No	Yes (battery part no. D2-BAT-1)
Calendar/Clock	No	Yes
I/O Terminal Block Replacement	ADC p/n C0-16TB	ADC p/n C0-16TB
Communication Port & Terminal Block Replacement	N/A	ADC p/n C0-03TB
24 VDC Power Terminal Block Replacement	ADC p/n C0-4TB	ADC p/n C0-4TB

CLICK Specifications

CPU Features

Basic CPU

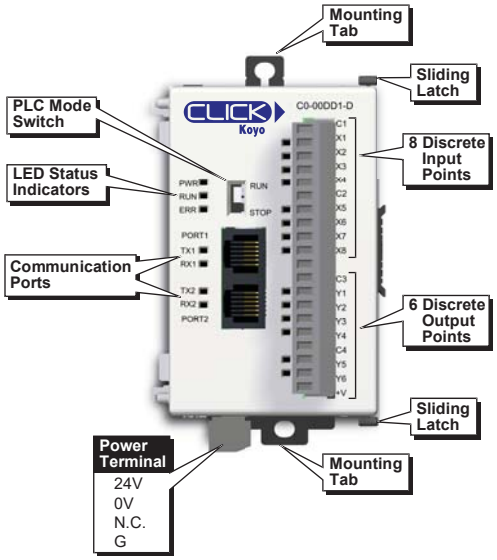

Analog CPU

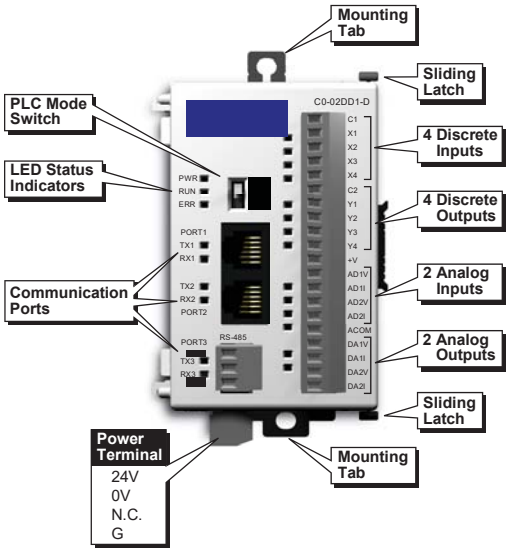

CPU LED Status Indicators

Basic CPU

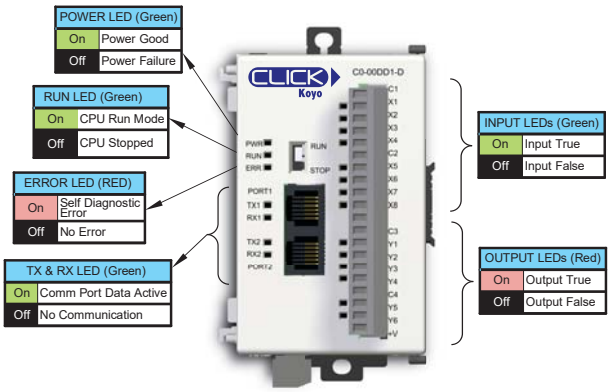

Analog CPU

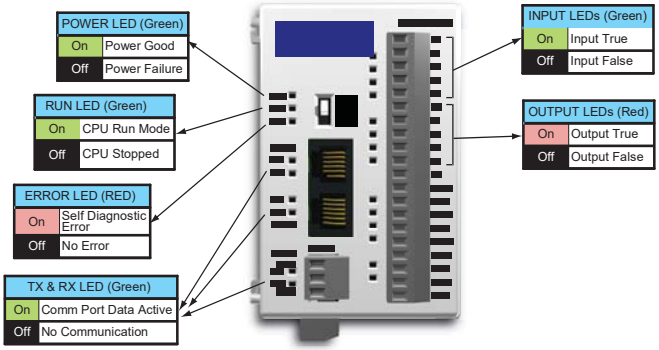

I/O Terminal Block Specifications for CPUs and I/O Modules

11-pin Terminal Block Specifications	
Connector Type	Pluggable Terminal Block
Number of Pins	11 pt
Pitch	3.50 mm
Wire Range	28-16 AWG
Wire Strip Length	7 mm
Screw Size	M2.0
Screw Torque	2.0 to 2.2 lb-inch
ADC Part Number	C0-8TB

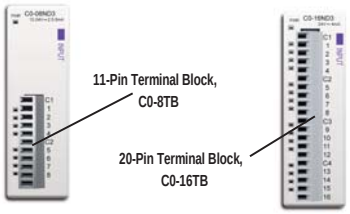

20-pin Terminal Block Specifications	
Connector Type	Pluggable Terminal Block
Number of Pins	20 pt
Pitch	3.50 mm
Wire Range	28-16 AWG
Wire Strip Length	7 mm
Screw Size	M2.0
Screw Torque	2.0 to 2.2 lb-inch
ADC Part Number	C0-16TB

Product Dimensions and Installation

It is important to understand the installation requirements for your CLI system. Your knowledge of thes requirements will help ensure that y system operates within its environmen and electrical limits.

Plan for Safety

This catalog should never be used a replacement for the user manual.

You can purchase, download free, or v online the user manuals for these prc ucts. Manual C0-USER-M is the user manual for the CLICK PLC. This use manual contains important safety info mation that must be followed. The syste installation should comply with all appro- priate electrical codes and standards.

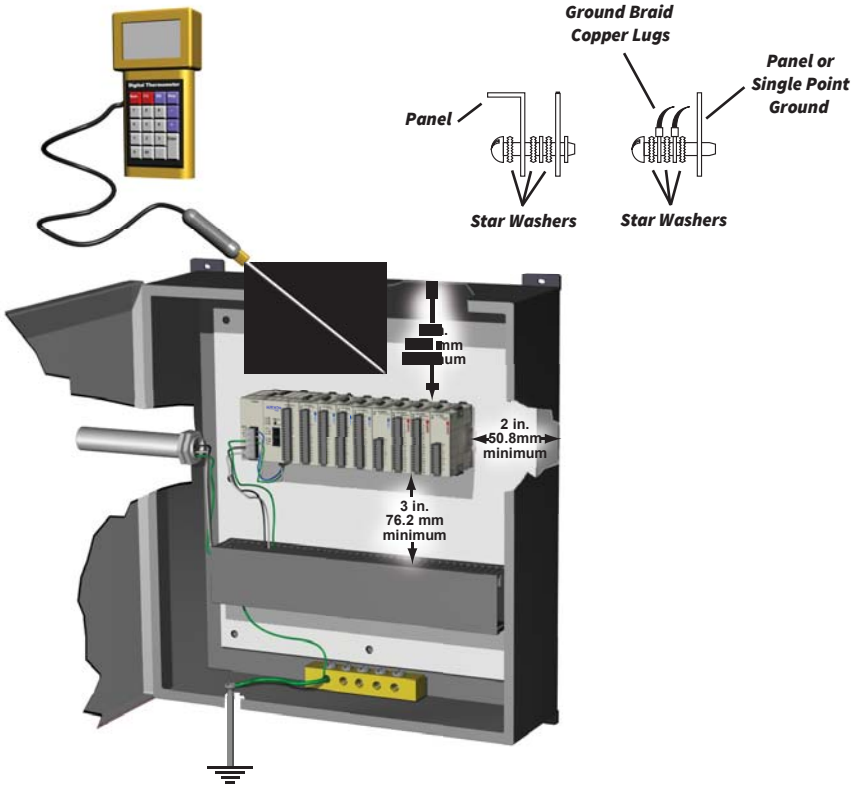

NOTE: THERE IS A MIMIMUM CLEARANCE REQUIREMENT OF 2 INCHES (51 MM) BETWEEN THE CLICK PLC AND THE PANEL DOOR OR ANY DEVICES MOUNTED IN THE PANEL DOOR. THE SAME CLEARANCE IS REQUIRED BETWEEN THE PLC AND ANY SIDE OF THE ENCLOSURE. A MINIMUM CLEARANCE OF 3 INCHES (76 MM) IS REQUIRED BETWEEN THE PLC AND A WIREWAY OR ANY HEAT PRODUCING DEVICE.

Mounting Orientation

CLICK PLCs must be mounted properly ensure ample airflow for cooling purposes. It is important to follow the un orientation requirements and to verify th the PLC's dimensions are compatible wi your application. Notice particularly the grounding requirements and the recommended cabinet clearances.

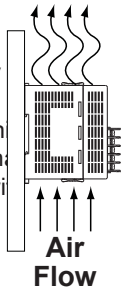

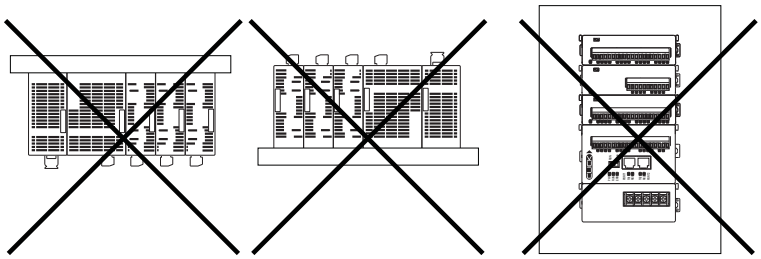

Product Dimensions and Installation

Connecting the Modules Together

CLICK CPUs, I/O modules and power supplies connect together using the extension ports that are located on the side panels of the modules (no PLC backplane/base required).

1. Remove extension port covers and slide the latch tabs forward.
2. Align the module pins and connection plug, and press the I/O module onto the right side of the CPU.
3. Slide the latch tabs backward to lock the modules together.

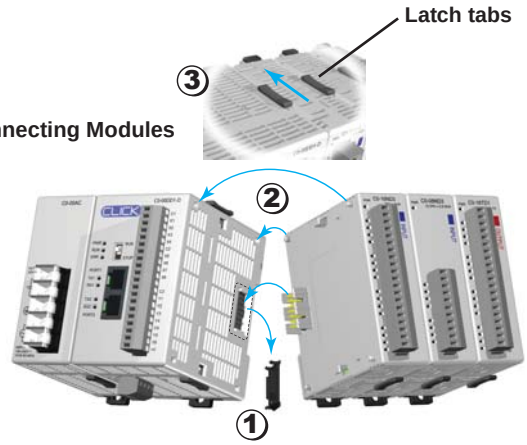

Supports up to eight I/O modules

Mounting

The CLICK PLC system, which includes the CLICK power supplies, CPU modules, and I/O modules, can be mounted in one of two ways.

1. DIN rail mounted
2. Surface mounted using the built-in upper and lower mounting tabs.

DIN Rail Mounting

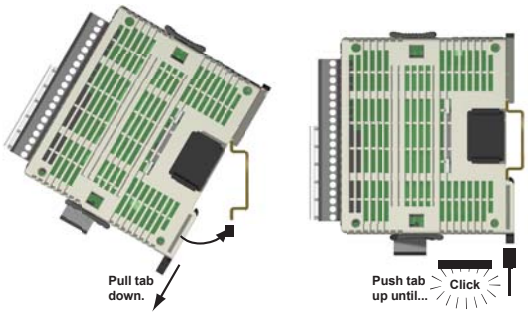

Surface Mounting

Unit Dimensions

These diagrams show the outside dimensions of the CLICK power suppy, CPU and I/O modules. The CLICK PLC system is designed to be mounted on standard 35mm DIN rail, or it can be surface mounted.

Allow proper spacing from other components within an enclosure.

Maximum system:

Power Supply + CPU + 8 I/O modules.

Power Supply Module | CPU Module | I/O Module

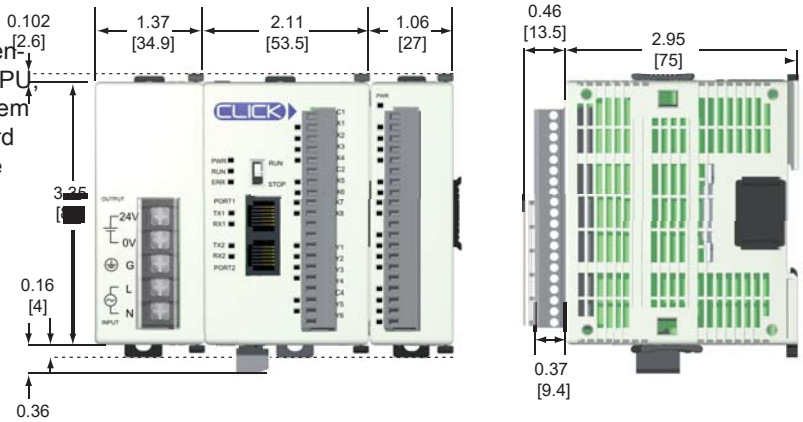

Dimensions in inches [millimeters]

Product Dimensions and Installation

Unit Dimensions

Power Supply

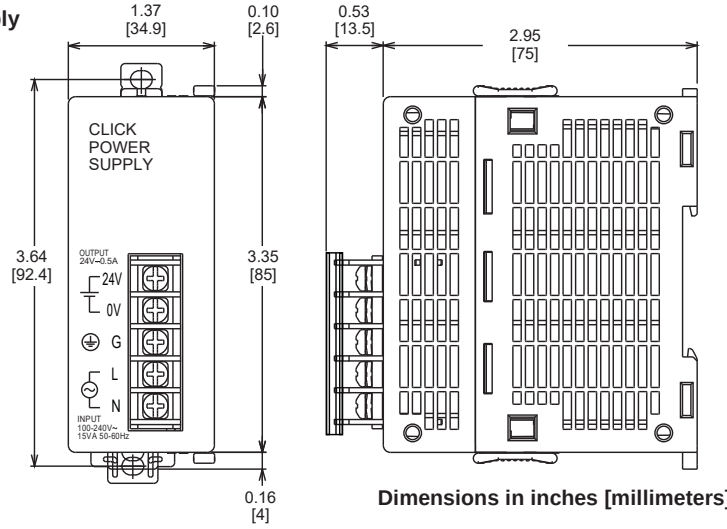

Dimensions in inches [millimeters]

CPU Module

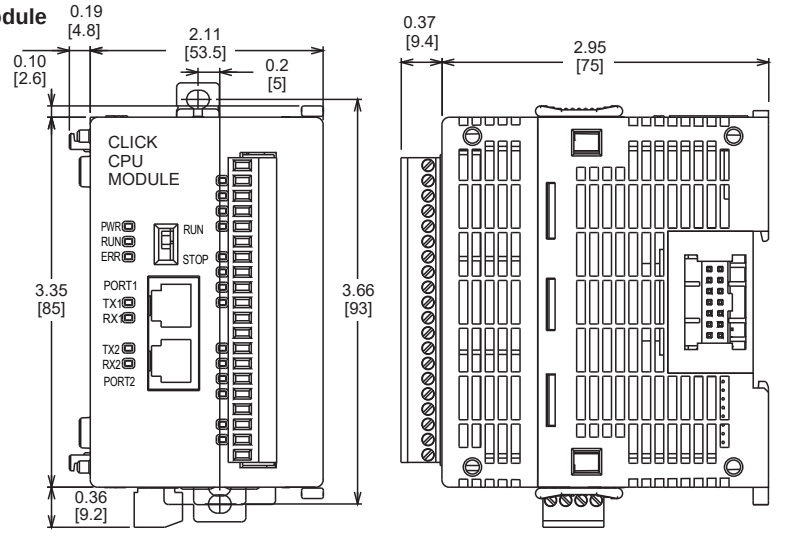

Dimensions in inches [millimeters]

I/O Module

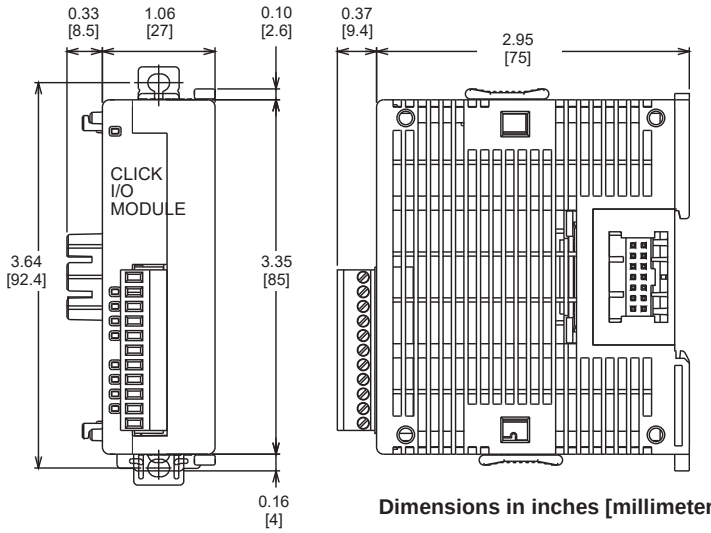

Dimensions in inches [millimeters]