Commodore Hard Disk Drive

Technical Manual

Model 9060/9090

commodore COMPUTER

www.commodore.ca

P/N 990441

CONTENTS

Section Number	Title	Page Number
SECTION 1	INTRODUCTION TO THE COMMODORE D9060 AND D9090 DISK SYSTEM	
	Introduction	1
1.1	Purpose of The Disk System	1
1.2	Physical Description of The Disk System	1
1.3	Performance Specifications	1
1.4	D9060 and D9090 Disk System Types	6
SECTION 2	OPERATING INSTRUCTIONS	
	Introduction	7
2.1	Unpacking The Disk System	7
2.2	Air Flow	7
2.3	Handling	7
2.4	Preparing The Disk System	7
2.5	Installation	7
2.6	Operation	8
SECTION 3	THEORY OF OPERATION	
	Introduction	9
3.1	Functional Description	9
3.2	IEEE-488 Interface Lines and Signals	10
3.2.1	Control Lines	10
3.2.2	Data Bus Lines	11
3.3	SASI Interface Lines and Signals	14
3.4	TM600 Series Interface	15
3.4.1	Control Input Lines	15
3.4.2	Output Lines	18
3.4.3	Data Transfer Lines	20
SECTION 4	MAINTENANCE	
	Introduction	21
4.1	General Care and Cleaning	21
4.2	Maintenance Inspection	21
4.3	Troubleshooting Guide	21
4.3.1	External Troubleshooting Guide	22
4.3.2	Internal Troubleshooting Guide	25

©www.commodore.ca

ILLUSTRATIONS

FIGURES

Figure Number	Title	Page Number
1	Communication Link	9
2	The GPIB Connector Showing Pin Designations	11
3	Disk System Block Diagram	13
4	SASI Interface Connections	15
5	Step Mode Timing	18

TABLES

Table Number	Title	Page Number
1	Commodore Disk System Specifications	2
2	Tandon Disk Drive Specifications	4
3	Winchester Disk Controller Specifications	5
4	Power Supply Specifications	6
5	IEEE Standard Interface	12
6	Disk Drive Standard Interface	16
7	Maintenance Inspection Checklist	21
8	Hard Disk Power Up Diagnostics, Disk Access Test	23

www.commodore.ca

TABLE 1

COMMODORE DISK SYSTEM SPECIFICATIONS

	Model No. D9090	Model No. D9060
Drives Per Unit	1	1
Heads Per Drive	6	4
Formatted Storage Capacity Per System, includes directory	7.52 megabytes	5.01 megabytes
Maximum Sequential File	7.50 megabytes	5.00 megabytes
Maximum Relative File	7.35 megabytes	4.90 megabytes
Disk System		
Buffer RAM	4 kilobytes	4 kilobytes
Disk Formats		
Cylinders	153	153
Sectors Per Cylinder	192	128
Sectors Per Track	32	32
Bytes Per Sector	256	256
Blocks Free (Unit), maximum, Less Bad Sectors and Directory	29,162	19,442
Transfer Rates		
Internal to Unit	5 megabits per second	5 megabits per second
IEEE-488 Bus	1.2 kilobytes per second	1.2 kilobytes per second
Access Times (Milliseconds)		
Track-To-Track	3	3
Average Track	153	153

www.commodore.ca

TABLE 1 (CONTINUED)

COMMODORE DISK SYSTEM SPECIFICATIONS

	Model No. D9090	Model No. D9060
Head Settling Time	15	15
Average Latency	8.34	8.34
RPM	3,600	3,600
Physical Dimensions		
Height (inches)	5.75	5.75
Width (inches)	8.25	8.25
Depth (inches)	15.25	15.25
Weight (pounds)	21	21
Electrical		
Power (watts)	175	175
Voltage	110-120 volts A. C., 60 Hertz	110-120 volts A.C, 60 Hertz
Fuse	2.0 amperes, 117 volts A. C., slow blow	
MI/Safety Approvals	U. L. and F. C. C.	

www.commodore.ca

TABLE 2

TANDON DISK DRIVE SPECIFICATIONS

	Model No. TM602S	Model No. TM603S
Capacity, Unformatted		
Per Drive	6.4 megabytes	9.6 megabytes
Per Surface	1.6 megabytes	1.6 megabytes
Per Track	10.4 kilobytes	10.4 kilobytes
Number Of		
Platters	2	3
Active Data Surface	4	6
Maximum Flux Reversal Density		
Flux Reversals Per Inch	7690 FRPI	7690 FRPI
Flux Reversals Per Millimeter	303 FRPMM	303 FRPMM
Track Density (Tracks Per Inch)	255 TPI	255 TPI
Cylinders	153	153
Tracks	612	918
Read/Write Heads	4	6
Data Transfer Rate	5.0 megabits per second	5.0 megabits per second

ENVIRONMENTAL SPECIFICATIONS

Ambient Temperature	
Operating Temperature	39°F to 122°F (4°C to 50° C)
Nonoperating Temperature	-40°F to 140°F (-40°C to 60°C)

www.commodore.ca

TABLE 3

WINCHESTER DISK CONTROLLER SPECIFICATIONS

Environmental Limits

	Operating	Storage
Temperature (F/C)	32°/0°to 131°/50°	-40°/-40°to 167°/75°
Relative Humidity	10 to 95 percent	10 to 95 percent
Maximum Wet Bulb Temperature	85°F	noncondensing
Altitude	Sea Level to 10,000 feet	Sea Level to 15,000 feet

Power Requirements

The maximum current requirements are:

+5 volts D. C. ±5 percent at 4.0 amperes

+12 volts D. C. ± 10 percent at 0.150 amperes

www.commodore.ca

TABLE 4

POWER SUPPLY SPECIFICATIONS

Electrical Specifications
5 volts ± 5 percent at 6 amperes, 5 amperes typical
12 volts ± 10 percent at 2 amperes, 5 amperes surge for 10 seconds
No more than 50 millivolts Periodic and Random Deviation (PARD) on both +5 and +12 volts

1.4 D9060 AND D9090 DISK SYSTEM TYPES

Top Assembly	Model Number	Differences
300520-001	D9060	117 volts A. C., TM602S, 2 platters
300520-002	D9060	220 volts A. C., TM602S, 2 platters
300520-003	D9090	117 volts A. C., TM603S, 3 platters
300520-004	D9090	220 volts A. C., TM603S, 3 platters
300520-005	D9060	100 volts A. C., TM602S, 2 platters
300520-006	D9060	240 volts A. C., TM602S, 2 platters
300520-007	D9090	100 volts A. C., TM603S, 3 platters
300520-008	D9090	240 volts A. C., TM603S, 3 platters

www.commodore.ca

SECTION 2

OPERATING INSTRUCTIONS

INTRODUCTION

This section of the manual contains information pertinent to unpacking, installation, handling, and operation of the disk system.

2.1 UNPACKING THE DISK SYSTEM

Before unpacking the disk system, inspect the shipping carton for signs of external damage. If the carton is damaged, caution should be exercised when inspecting its contents. The contents and all packing material should be removed from the carton. No packing materials should be discarded until all the contents are located. The carton should contain a Model Number D9Ø6Ø or D9Ø9Ø Disk System and a user's manual. If any item is missing, your Commodore dealer should be notified.

2.2 AIR FLOW

Air flow to and from the D9Ø6Ø and D9Ø9Ø disk systems must be unrestricted. Failure to allow adequate air flow may result in a power failure.

2.3 HANDLING

Care should be taken whenever the units are moved. The unit should not be moved while the disk drive is in motion. The unit should not be subjected to severe physical shocks i.e., it should not be dropped.

2.4 PREPARING THE DISK SYSTEM

Before connecting the disk system to a power source, verify that the line voltage configuration is correct, and that the power input fuse is installed. See Table 1 for fuse selection.

2.5 INSTALLATION

One of two connector cables are required to connect the disk system to the computer. These cables can be supplied by your Commodore dealer.

PET-to-IEEE cable, Part Number 32Ø1Ø1, should be used if the disk system is be connected directly to the computer.

IEEE-to-IEEE cable, Part Number 9Ø5Ø8Ø, should be used if the disk system is to be "daisy chained" to another peripheral device, such as the Commodore Model Number 4Ø22 or any other suitably interfaced printer.

©www.commodore.ca

Note

The disk system should be the first peripheral attached to the computer if other devices are to be "daisy chained".

The procedure for connecting the disk system to the computer is:

Step 1: Power to the computer and all peripherials should be turned off.

Step 2: The disk drive should be located as close as possible to the computer.

Step 3: The PET-to-IEEE cable is connected between the IEEE-488 interface on the computer and the disk drive. If additional IEEE devices are to be connected, the IEEE-to-IEEE cable(s) must be used.

Step 4: The disk unit power cable should be connected to an A. C. outlet at this time, but with its power switch turned off.

2.6 OPERATION

Upon power-on, the unit performs a self-test within the DOS board. For proper operation, the front L. E. D.'s flash twice as the self-test is executed. After a successful self-test, the front panel L. E. D.'s indicate that the unit is in a ready, quiescent condition, i. e., the top L. E. D.'s, unit status is green and the bottom L. E. D., drive activity, is off. Any other state of the L.E. D.'s after power-on indicates a failure within the unit to properly initialize, and one should refer to the *troubleshooting guide in this manual*.

Normal unit operation should be possible over the IEEE-488 bus, as outlined in the Commodore disk reference manual, after the recommended one minute warm-up time, allowing the disk rotational speed to stabilize.

www.commodore.ca

SECTION 3

THEORY OF OPERATION

INTRODUCTION

This section of the manual contains detailed information about the theory of operation and the interface descriptions of both the disk systems. The discussion begins with a general summary of the disk system functions, followed by a detailed description of the various interface signals. To better understand the function being described, see Appenix 3.

3.1 FUNCTIONAL DESCRIPTION

The disk system conforms to the IEEE-488 interface requirement. It has an IEEE interface connector located on the back panel. The disk system communicates with the host system from the DOS board, which has a 6502 microprocessor that controls the IEEE-488 bus, referred to as the IEEE processor (see Figure 1).

The DOS board has a second 6502 microprocessor that controls the SASI interface communication to the Winchester controller board, referred to as the SASI processor. Communication between the IEEE and SASI processors is via a common accessible random access memory block.

The controller board communicates information between the DOS board and the disk drive.

The disk drive positions the recording heads over the desired track, and reads or writes the data on it.

Figure 3 contains a block diagram that indicates the overall interconnection between the major assemblies within the disk system.

Note

The DOS board has both IEEE-488 and SASI interfaces. The Winchester controller board has the SASI and disk drive interfaces.

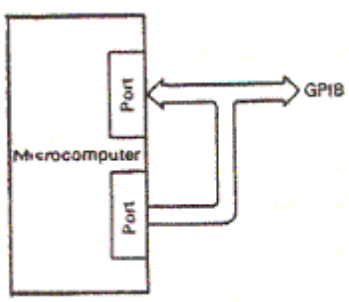

Figure 1
Communication Link

www.commodore.ca

3.2 IEEE-488 INTERFACE LINES AND SIGNALS

The following sections contain a description of the IEEE-488 interface lines and signals. There are two basic groups of lines: control lines and data transfer lines.

3.2.1 Control Lines

Remote Enable (REN)

The Remote Enable line can be activated only by the host system controller. By having a grounded pin, which holds the REN line permanently low (true), the host system enables this line, and bus residing devices subsequently respond to the controller commands or to those of another transmitting device (talker). If this line is allowed to become inactive (false), all bus residing devices return to local control.

Note

On the Commodore computer, Pin 17 is always grounded in the host system.

Service Request (SRQ)

The Service Request line is a type of interrupt line, and it can be activated low (true) by any device that resides on the bus that needs service from the host system.

End or Identify (EOI)

The End or Identify line can be asserted by the controller-in-charge or by a bus-compatible transmitting device. This line may be pulled low (true) by a transmitting device during the transfer of its last data byte in a multiple-byte message to signal the end of the message. A transmitting device has the option of using EOI. However, EOI always is pulled low (true) by the host system during the transfer of its last data byte onto the Data Input/Output (DIO) lines. By using this same EOI signal line and the Attention (ATN) message, the controller-in-charge initiates a parallel poll sequence.

Attention (ATN)

The ATN line is asserted only by the host system during the addressing or command sequence. It can be activated low (true) only by the controller-in-charge to get, as its name implies, the attention of devices that reside on the bus. Before sending commands on the eight data lines to peripheral devices, the host system, acting as the controller-in-charge, activates the ATN line low (true) to tell all devices that signal levels, both true and false, present on the data bus represent addresses and control messages for them.

When the ATN line is returned high, only the transmitting devices and receiving devices previously activated take part in the subsequent data exchange.

www.commodore.ca

Interface Clear (IFC)

The Interface Clear line sends a reset signal that can be initiated only by the host system controller.

When the host system is powered on or reset, this line is driven low (true) for approximately 100 milliseconds by the host internal reset signal, and all bus devices are returned or set to their idle (inactive) states.

Data Valid (DAV)

The Data Valid line is asserted low (true) by a transmitting device after it places its data on the Data Input/Output lines. This tells the receiving device that the information on the data lines is valid.

Not Ready For Data (NRFD)

The Not Ready For Data line, when asserted low (true), indicates that not all devices on the General Purpose Interface Bus (GPIB) are ready to receive data. Each instrument, in its own time, releases this line. However, the line cannot return to its high (inactive) state until the slowest responding device releases this line.

Not Data Accepted (NDAC)

The Not Data Accepted line is controlled by the device or devices that receive the data. This line is held low (true) until all the receiving devices capture the particular address or data byte; then the line is set high.

3.2.2 Data Bus Lines

The GPIB data bus lines (DIO1-8) are similar to typical microprocessor input and output ports. These lines carry eight-bit parallel data to or from the host system.

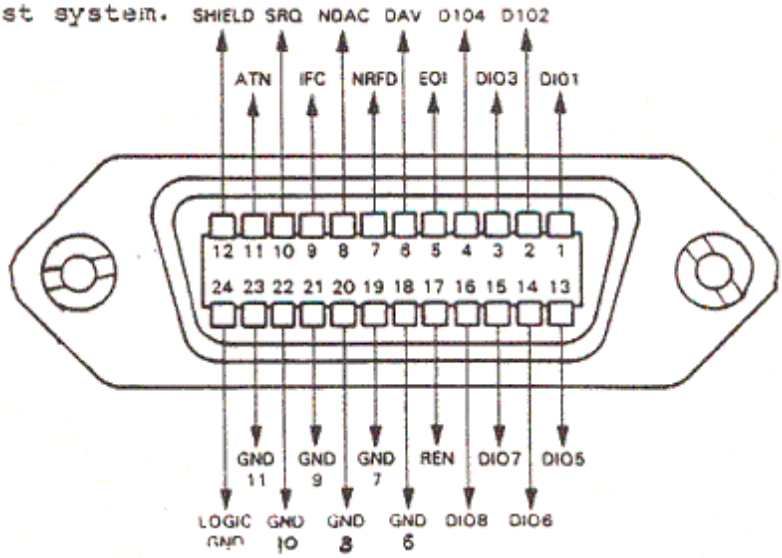

Figure 2
The GPIB Connector Showing Pin Designations

www.commodore.ca

TABLE 5

IEEE STANDARD INTERFACE

IEEE Bus (GPIB) Contact	GPIB Functional Division	IEEE Function Assignment	IEEE Function Description
1		DIO1	Data Input/Output Wire 1
2		DIO2	Data Input/Output Wire 2
3	Data Bus	DIO3	Data Input/Output Wire 3
4		DIO4	Data Input/Output Wire 4
5	Interface Management Bus	EOI	End or Identify
6	Transfer	DAV	Data Valid
7	Control	NRFD	Not Ready For Data
8	Bus	NDAC	Not Data Accepted (Data Not Accepted)
9	Interface	IFC	Interface Clear
10	Management	SRQ	Service Request
11	Bus	ATN	Attention
12		SHIELD	GPIB Cable Shield and Chassis Ground
13		DIO 5	Data Input/Output Wire 5
14		DIO 6	Data Input/Output Wire 6
15	Data Bus	DIO 7	Data Input/Output Wire 7
16		DIO 8	Data Input/Output Wire 8
17	Interface Managment Bus	REN	Remote Enable (always at ground in the host system
18		GND 6	DAV
19		GND 7	NRFD
20		GND 8	NDAC } Matching grounds for
21	Grounds	GND 9	IFC } these control lines
22		GND 10	SRQ
23		GND 11	ATN
24		Logic GND	EOI and REN Grounds

www.commodore.ca

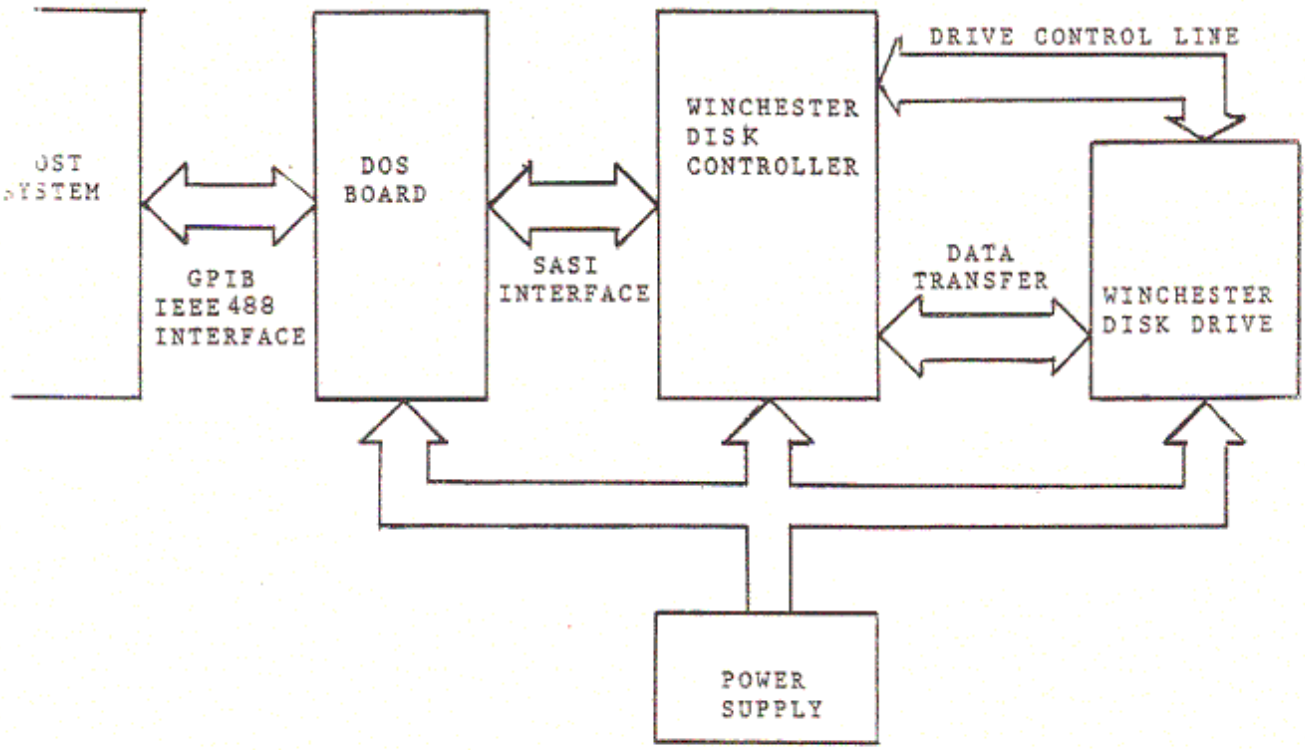

Figure 3

Disk System Block Diagram

www.commodore.ca

3.3 SASI INTERFACE LINES AND SIGNALS

The following contains a description of the SASI type interface lines and signals. This is the communication link between the DOS board and Winchester disk controller.

Reset (RST)

Assertion by the processor causes the disk controller to cease all operations and return to an idle condition. This signal is normally used during a power-up sequence. A reset during a write operation causes incorrect data to be written on the selected disk. The reset pulse should be at least one microsecond wide.

Select (SEL)

Assertion by the processor along with the controller's address bit, Data Bit Ø, causes the controller to be selected. The Select line must be deasserted when the disk controller asserts the Busy line.

Busy (BSY)

Assertion by the disk controller indicates that the controller has control of the interface bus and cannot be interrupted.

Control/Data (C/D)

Assertion by the disk controller indicates the command or status information is to be transferred on the data bus, while deassertion of this line indicates that data information is to be transferred on the data bus.

Input/Output (I/O)

Assertion by the disk controller indicates that information is going to be transferred to the processor from the disk controller. Deassertion indicates that information is going to be transferred to the disk controller from the processor.

Request (REQ)

Assertion by the disk controller indicates that an eight-bit byte is to be transferred on the data bus. A request is deasserted after the assertion of the Acknowledge line.

Acknowledge (ACK)

Assertion by the processor indicates that data has been accepted by the processor or that data is ready to be transferred from the processor to the controller.

www.commodore.ca

Message (MSG)

Assertion by the disk controller indicates that a status byte transfer has occurred. When MSG is asserted, REQ is asserted in order to transfer an eight-bit byte to indicate end of operation. When the REQ/ACK handshake is complete, the controller deasserts all interface signal lines and returns to an Idle state.

Data Bus Bits Ø-7 (DB)

These bi-directional data lines are used to transfer eight-bit parallel data to and from the processor. Bit 7 is the most significant bit.

Note

There is no parity bit available on the Winchester disk controller.

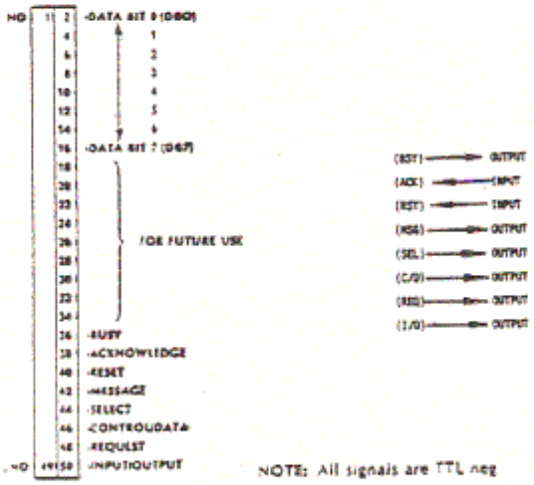

Figure 4

SASI Interface Connections

3.4 TM6ØØ SERIES INTERFACE

The interface for the TM6ØØ series drive is compatible with industry standard drives. Compatibility is defined as using the same pin assignment where the signal and function are common. Table 6 contains pin assignments.

3.4.1 Control Input Lines

The control input signals are of two kinds: those to be multiplexed in a multiple drive system and those that do the multiplexing. The control input signals to be multiplexed are: Reduced Write Current, Write Gate, Head Select Line $2^{Ø}$, Head Select Line 2^{1}, Head Select Line 2^{2}, Step, and Direction In. The signal to do the multiplexing is Drive Select Ø, Drive Select 1, Drive Select 2 or Drive Select 3.

www.commodore.ca

TABLE 6

Disk Drive Standard Interface

Connector	Pin Number Signal	(Gnd)	Signal Type	I/O	Signal Name
P1	2	(1)	S	I	Reduce Write I
↑	4	(3)	S	-	Head Select 2^2
|	6	(5)	S	I	Write Gate
|	8	(7)	S	O	Seek Complete
|	10	(9)	S	O	Track 000
34-Pin	12	(11)	S	O	Fault
Ribbon	14	(13)	S	I	Head Select 2^0
Daisy	16	(15)	-	-	Reserved (To J2-7)
Chain	18	(17)	S	I	Head Select 2^1
|	20	(19)	S	O	Index
|	22	(21)	S	O	Ready
|	24	(23)	S	I	Step
|	26	(25)	S	I	Drive Select 0
|	28	(27)	S	I	Drive Select 1
|	30	(29)	S	I	Drive Select 2
↓	32	(31)	S	I	Drive Select 3
P1	34	(33)	S	I	Direction In
P2	1	(2)	S	O	Drive Selected
↑	3	(4)	S	-	Reserved
|	5	(6)	S	I	Reserved
|	7	(8)	-	-	Reserved (To J1-16)
20-Pin	9	(10)	-	-	Spare
Ribbon	11	(12)	-	-	Ground
Daisy	13		D	I	+ Write Data
Chain	14		D	I	- Write Data
or	15	(16)	-	-	Ground
Radial	17		D	O	+ Read Data
↓	18		D	O	- Read Data
P2	19	(20)	-	-	Ground
P3	1			-	+12 Volt D. C. In
4-Pin Power	2			-	12 Volt Return
Radial	3			-	5 Volt Return
P3	4			-	+5 Volt D. C. In

Notes:

1. S - Single Ended
2. D - Differential
3. I - Drive Input
4. 0 - Drive Output

www.commodore.ca

The input lines have the following electrical specifications, as measured at the drive.

True: Ø.Ø volts D. C. to Ø.4 volt D. C. at Current Load = -4Ø milliamperes, maximum

False: 2.5 volts D. C. to 5.25 volts D. C. at Current Open = 25Ø microamperes, maximum

All input lines share a 22Ø/33Ø ohm resistor pack for line termination.

Reduced Write Current

When active, this line, together with Write Gate, causes the write circuitry to write on the disk with a lower write current. It is recommended this line be set true when writing is to be done on cylinders 128 and higher, and set false when writing is to be done on cylinders Ø through 127 of the TM6Ø2S and TM6Ø3S drives.

Write Gate

The active state of this signal or logical zero level enables write data to be written on the disk. The inactive state of this signal enables the data to be transferred from the drive. In addition, the inactive state enables the step pulse to step the read/write actuator.

Head Select Lines $2^{Ø}$, 2^{1}, 2^{2}

These three lines provide for the selection of each read/write head in a binary coded sequence. Head Select Line $2^{Ø}$ is the least significant line. The heads are numbered Ø through 5. When all Head Select Lines are false, Head Ø is selected.

Head recovery time (Head-to-Head Select, Write-to-Read recovery, or Read-to-Write recovery) is 2.4 microseconds maximum.

Step

This interface line is a control signal that causes the read/write head to move with the direction of motion defined by the Direction In line.

The access motion is initiated at the logical true-to-logical false transitionor at the trailing edge of this signal pulse. Any change in the Direction In line must be made at least 1Ø0 nanoseconds before the true-to-false edge of the step pulse. The quiescent state of this line should be held logically false.

The read/write head moves at the rate of the incoming step pulses. The minimum time between successive steps is 3.Ø milliseconds. The minimum pulse width is 1.Ø microsecond. Figure 5 contains the step timing.

www.commodore.ca

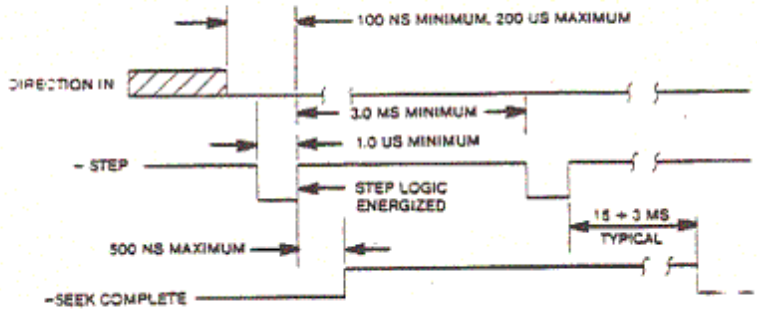

Figure 5

Step Mode Timing

Direction In

This signal defines the direction of motion of the read/write heads when the Step line is pulsed. An open circuit or logical false defines the direction as "out". If a pulse is applied to the Step line, the read/write heads move away from the center of the disk. If this line is logical true, the direction is defined as "in", and the read/write heads move in toward the center of the disk.

Seek Complete must be true prior to changing directions and prior to the application of additional step pulses.

Drive Select Ø Through Drive Select 3

These control signals enable the selected drive's input receivers and output drivers. When logically false, the output drivers are open circuits or logically false and the input receivers do not acknowledge signals presented to them.

Note

On Commodore's D9Ø6Ø and D9Ø9Ø systems, the drive is designated as Drive Ø.

3.4.2 Output Lines

The output control signals are driven with an open collector output stage capable of sinking a maxmimum of 4Ø milliamperes in a logical true state, with a maximum voltage of Ø.4 volt measured at the driver. When the line driver is in the logical false state, the driver transistor is off, and the collector cutoff is a maximum of 25Ø microamperes.

www.commodore.ca

All J1 output lines are enabled by the respective Drive Select lines.

Seek Complete

This line goes true when the read/write heads have settled on the final track at the end of a seek. Reading or writing should not be attempted when Seek Complete is false.

Seek Complete goes false:

1. when a recalibration sequence is initiated by drive logic at power on because the read/write heads are not over Track 000.

2. a maximum of 500 nanoseconds after the trailing edge of a step pulse or a series of step pulses.

3. when power is momentarily lost, Seek Complete is false when power is restored and remains false until an automatic recalibration is completed.

Track 000

This interface signal indicates a true state only when the drive's read/write heads are positioned at Track 000, the outermost data track.

Fault

This signal indicates a condition exists at the drive that could cause improper writing on the disk. When this line is true, further writing is inhibited, as are other drive functions, until the condition is corrected.

A fault signal is initiated by either the +12 volt or +5 volt supply being below the specified limits.

Index

The Index signal is provided by the drive once each revolution, 16.7 milliseconds nominal, to indicate the beginning of the track. Normally, this signal is logical false, and makes the transition to logical true to indicate Index. Only the transition from logical false to logical true is valid.

Ready

When true, the Ready signal, with Seek Complete, indicates that the drive is ready to read, write or seek, and the I/O signals are valid. When this line is false, all controller-initiated functions are inhibited.

www.commodore.ca

The typical time after power on for Ready to be true is 15 seconds. Track ØØØ, Seek Complete, and Ready come true sequentially during power on.

Select Status

A status line is provided at the J2/P2 connector to inform the host system of the selection status of the drive.

The Drive Selected line is driven by a TTL open collector driver. This signal goes active only when the drive is programmed as Drive X (X = Ø, 1, 2, or 3) by programming the shunt on the drive, and the Drive Select X line at J1/P1 is activated by the host system.

3.4.3 Data Transfer Lines

All lines associated with the transfer of data between the drive and the host system are differential in nature. These lines are provided at the J2/P2 connector on all drives.

Two pairs of balanced lines are used for the transfer of data: MFM Write Data and MFM Read Data.

MFM Write Data

This is a differential pair of lines that defines the flux transition to be written on the track. The transition of the +MFM Write Data line going more positive than the - MFM Write Data line causes a flux reversal on the track if the Write Gate is active. This signal must be a driven to an inactive state (+ MFM Write Data more negative than - MFM Write Data) by the disk controller when in a read mode.

The delay from the leading edge of Write Gate to the Write Data pulse is 4ØØ nanoseconds maximum.

MFM Read Data

The data recovered by reading a prerecorded track is transmitted to the host system via the differential pair of MFM Read Data lines. The transition of the +MFM Read Data line going more positive than the - MFM Read Data line represents a flux reversal on the track of the selected head.

www.commodore.ca

SECTION 4

MAINTENANCE

INTRODUCTION

Preventive maintenance consists of visual inspection, cleaning and checking the disk system performance. The severity of the environment in which the disk system is used determines the frequency of maintenance. When accomplished on a regular basis, preventive maintenance may prevent damage and enhance the system's reliability.

4.1 GENERAL CARE AND CLEANING

The cabinet reduces the accumulation of dust inside the disk system since dirt may cause overheating and early component breakdown. Dirt on components acts as an insulating blanket preventing effective heat dissipation. Dirt also provides a conductive electrical path that can cause system failure.

To clean the interior of the disk system, blow the dust off with low pressure air, and remove the remaining dust with a soft brush or soft damp cloth. A cotton tipped applicator is useful for cleaning narrow spaces and printed circuit boards.

4.2 MAINTENANCE INSPECTION

Inspect the disk system for physical damage or wear, using Table 7 as a guide.

Table 7

Maintenance Inspection Checklist

Item	Inspect for
Cabinet and Chassis	Dents, deformations, and damaged hardware
Wiring and Cables	Loose plugs, loose connectors, burned, broken or frayed wiring
Circuit Boards	Corroded or cold solder joints. Burned broken or cracked circuitry. Burned, cracked or broken components.

4.3 TROUBLESHOOTING GUIDE

This troubleshooting guide consists of two sections: an external guide which contains tests and diagnostics that may be conducted while the unit is still unopened, and an internal guide which contains tests that must be conducted while the system is open and the boards are accessible.

www.commodore.ca

4.3.1 External Troubleshooting Guide

Physical Examination

Check for any physical damage, especially that which would indicate the unit was dropped. If the unit appears to have been dropped, open the system, see the replacement guide, and verify that all items are in place.

Check the unit fuse. If blown, replace the fuse, and perform all internal checks before proceeding.

Functional Test--Internal Self-test

Turn on the unit's power, and watch the front panel L. E. D's. The L. E. D's should flash twice, then stay in the ready/quiescient condition: unit status L. E. D. green, and drive access L. E. D. off. If the unit passes the internal self-test, it is ready for a system test.

If the unit L. E. D's are not on, proceed to the internal tests.

If the unit L. E. D's are flashing some number of flashes, followed by a pause, forever repeating, the system is nonfunctional, and Table 3 gives one an idea which circuit is inoperative on the DOS board.

Note

Prior to changing the DOS board, proper voltage should be verified on it. High voltage on the +5 volt lines also causes repetitive flashing.

Replace the DOS board (see the replacement procedure section) or the regulator board if the voltage is too high and cannot be adjusted (see Table 4, page 6).

System Test

IEEE-488 Interface Test

Enter the following lines into the computer:

```
  5  rem Program 1
 10  Open 15, 8, 15:  rem open disk drive unit
 20  a$="": c$ = "": d$= "": s$ =:  rem initialize variables
 30  Print:  Number 15, "uj":  rem initialize disk unit
 40  Input:  15, a$, b$, c$, d$:  rem get variables from drive
 50  Print:  A$ s$ b$ s$ c$ s$ d$:  rem display variables on screen
 60  Close:  15:  rem disk unit
```


www.commodore.ca

TABLE 8

HARD DISK POWER UP DIAGNOSTICS,
DISK ACCESS TEST

Number of Flashes	Possible Faulty IC Located On DOS Board
1	6532, 7F 7G
2	2364, 7D
3	2364. 7C
4	6502, 2114, 74LS157, 74LS42, 4A, 5A, 5E, 6C, 6D, 6B, 6A, 3D
5	6810, 4D
6	2114, 74LS157, 5E, 5A, 6C, 6D, 6B, 6A
7	2114, 74LS157, 5B, 5F, 6C, 6D, 6B, 6A
8	2144, 74LS157, 5C, 5G, 6C, 6D, 6B, 6A
9	2114, 74LS157, 5D, 5H, 6C, 6D, 6B, 6A
10	2332, 4C
11*	Not used
12*	74LS157, 6C, 6D, 6B, 6A
13	74LS157, 6C, 6D, 6B, 6A
14	74LS157, 6C, 6D, 6B, 6A

* During Format 11, 12 flashes, excessive bad sectors

www.commodore.ca

PROGRAM 1

This program assumes that the unit under test (UUT) is the only device Number 8 on the IEEE-488 bus.

The cocrect response from the unit should be: 73, CBM DOS V3.Ø,ØØ,ØØ

If the response is good, the IEEE-488 communication is correct.

If the response is not correct, verify that the UUT is the only device Number 8 on the IEEE-488 bus, and that the IEEE cable is properly connected. If so, the IEEE-488 interface on the DOS board is non-functional, and the DOS board should be replaced as specified in the replacement procedure section.

Disk Access Test

Enter the following lines into the computer:

```
load "$Ø", 8
list
```

This loads the directory from the disk to the computer, assuming the disk has a readable directory. If the unit fails this test, it would be advisable to proceed to the internal tests, and verify proper interconnections, and power. If no problem is found, the problem is in the DOS, the controller, or the drive. The drive, which may contain user data, should be the last item checked or replaced. The controller board is the next suspect, then the DOS. If the unit is functional, it should be reassembled.

Caution

If the drive still fails to read, the disk may be reformatted. This destroys any user data that is on the drive. The lost data cannot be recovered.

The drive can be reformatted by issuing a header "diskname, OO" (basic <4.Ø). These commands may take up to one hour and forty-five minutes on a D9Ø9Ø unit. If the drive still cannot be read, replace the disk drive (see the replacement procedure).

If the unit fails during format, for example, 11 flashes occur, there is a problem either with the drive or with the controller. It is recommended the controller be replaced first, and the drive only if necessary.

If the unit status L. E. D. is red, indicating failure, the unit status may be displayed by using Program 1, without line 3Ø. If the unit status indicates the drive is not ready, and the drive is formatted, it is probably bad, and should be replaced (see replacement guide).

If the unit loads the directory properly, the unit is functional. One may store a program on the disk, read, and execute it to verify the read/write process within the unit.

www.commodore.ca

4.3.2 Internal Troubleshooting Guide

Electrical Connections (see Appendix 3)

Verify that all cables are properly connected.

Linear power supply connectors are installed.

The connector from the transformer is connected to the power supply board.

Two wires are connected to the filter capacitor.

The chassis ground is connected to the chassis.

The DOS power connector is installed.

The controller power connector is installed.

The drive power connector is installed.

The DOS to controller flat ribbon cable is connected.

The two controller to drive flat ribbon cables are connected.

The DOS to L. E. D's cable is installed.

Note

If this cable is incorrectly installed, the L. E. D's flash with an incorrect pattern. At location on the controller board, a jumper clip (J1 on top assembly) is installed. Without this jumper, the controller never sees data from the drive, and thinks that the drive is inoperative.

Internal Testing

The most important test to be conducted is to verify the +5 volt and +12 volt operation of the power supply. This may be accomplished by looking at the voltage potential across the +5 volt and +5 ground test points, and the +12 volt and +12 ground test points on the power supply board. The +5 volt is common to all +5 logic; the +12 volt is common on both the drive and controller. A voltmeter or an oscilloscope may be used to examine these voltage potentials. Adjustment pots to adjust the +5 volt and +12 volt potentials are accessible on the power supply board. The adjustment pot nearest the heatsinks is the +5 volt adjustment pot; the other one is the +12 volt adjustment pot.

Tolerances on both should be plus or minus five percent. If the supply cannot be adjusted to within five percent, replace the power supply (see replacement guide), then repeat this test. If the new power supply board cannot be adjusted and the supply is low, disconnect the drive, the controller, and the DOS boards, one at a time, and replace the unit that is loading down the supply.

www.commodore.ca

At this point, the functional test should be conducted on the disk system. If any failures are found, the item diagnosed as defective should be replaced. If the disk system passes the functional test, it should be closed in, then screws and fasteners reinstalled, and the top cover put into place. Then, repeat the functional test. If no errors are found, the disk system is considered good.

www.commodore.ca

SECTION 5

REPLACEMENT PROCEDURES

INTRODUCTION

The assembly drawings (see Appendix 3) are intended to help one remove and reinstall individual assemblies or components.

Replacement Guide

Caution

To prevent shock hazard, always disconnect the unit from the primary source prior to disassembling the unit.

This section contains a step-by-step approach in disassembly of the D9060 or D9090 disk system. Each of the steps assumes that the previous ones have been performed. The system may be reassembled by reversing the order of the steps. A recommended parts list for the system is found in Appendix 2.

5.1 TOOLS

The tools needed to disassemble and reassemble the system are:

1. Phillips Screwdriver, Number 2
2. slot screwdriver
3. needlenose pliers
4. 11/32-inch socket or open end wrench

5.2 TOP COVER

Remove four screws, two on each side.
Lift top cover up and remove.

5.3 DOS BOARD

Disconnect the DOS power. The connector is located on the bottom side of the DOS board, at the rear of the unit. Disconnect the 50 Pin DOS-controller interface cable, located on the top front of the DOS board. The slotted screwdriver is useful in removing the cable.

Disconect the L. E. D. interconnect cable, located on the top front cover of the DOS board.

www.commodore.ca

Remove the four screws that connect the DOS board, located on both of its edges, toward the front of the system.

Remove the DOS board and the DOS shield, if it is installed on the system.

When replacing the DOS Board, be sure jumper J14 is installed for the D9090 system, and not installed for the D9060 system.

5.4 CONTROLLER BOARD

Disconnect the controller power, located on the bottom side of the controller board at the rear of the unit.

Disconnect the 50-pin DOS-controller cable to J2. Care should be taken not to pull on the cable itself during removal.

Disconnect the 20-pin cable from J3 on the controller board. Care should be taken not to pull on the cable during removal.

Disconnect the 34-pin cable from J1 on the controller board. Care should be taken not to pull on the cable during removal.

Unscrew the fiber standoffs that hold on the controller board. Standoffs are located on the edges of the controller board toward the front of the unit.

Remove the controller board, and the disk drive shield.

Remove the four white spacers located on the four adapter screws that protrude through the shield.

Remove the disk drive's shield. Note the shield is copperside down, i. e., facing the drive.

Disconnect the 34-pin cable from disk drive connector J1.

Disconnect the 20-pin cable from disk drive connector J2.

Note

Continue to remove the power supply, fan, transformer, and other miscellaneous items at the rear of the unit without removing the disk drive.

5.5 DISK DRIVE

Disconnect the drive's power cable from the disk unit, located at the rear of the disk unit, connected to the bottom of the disk's circuit board. Needlenose pliers are useful. Remove the four screws mounting the disk system to the chassis, located on the side of the system. Care should be taken not to let it drop as the second screw is removed from each side. Lift the drive out of the chassis.

www.commodore.ca

5.6 POWER SUPPLY BOARD, LINEAR SUPPLY

Disconnect the primary windings by disconnecting the transformer cable plugged into the power supply board. Remove four 11/32-inch nuts on the bottom of chassis that hold the transformer in place. (Caution: the transformer is heavy.) Remove the screws on either side of the high voltage cover. Remove the power supply board by depressing the plastic restraining latch on each standoff. Then, lift the power supply board and the high voltage cover out of the system.

Transformer

The transformer may be removed by unsoldering the primary connections on the switch and power connector. The fan, switch, power connector, and fuse may be unsoldered and replaced, when physically damaged.

5.7 NON-WARRANTY REPAIR

All Tandon Service Centers are available for repair. The cost of freight is paid by the customer both ways.

Tested spare subassemblies are available. Purchase orders are processed by Tandon Corporation's Order Entry Department.

All repaired parts and services are covered under Tandon Corporation's nine month warranty.

www.commodore.ca

APPENDIX 1

MAJOR SUBASSEMBLIES

Assembly Number	Type	Quantity
300013-001	Disk Operating System (DOS) PCBA	1
188001-001	Control PCBA	1
300018-001	Power Supply, +5 and +12 volts D. C.	1
300507-001	Transformer Assembly	1
300508-001	Transformer, 117 volts, 100 volts A. C., 50-60 Hertz	1
187002-001	602S Drive	1
187002-002	603S Drive	1

©www.commodore.ca

APPENDIX 2

RECOMMENDED SPARE PARTS LIST

The following spare parts are available from the Voyager Systems Division of Tandon Corporation.

Part Number	Description
187045-001	Control and Data PCBA
187065-001	Spindle Control PCBA
187010-001	Index Assembly
187021-001	Track 00 Optical Assembly
187021-001	Frame Assembly
188001-001	Control PCBA
300018-001	Power Supply
300013-001	DOS PCBA
300508-001	Transformer, 117 volts
300508-002	Transformer, 220 volts
187002-001	TM602S Drive
187002-002	TM603S Drive

©www.commodore.ca

APPENDIX 3

Drawing Number	Title	Number of Sheets
300520-00X	Commodore Disk System Expanded View	2
300010-002	Winchester DOS/Controller Schematic	3
300013-002	Winchester DOS/Controller PCB Assembly	1
188008-001	Disk Drive Controller Schematic	7
	Disk Drive Controller PCB Assembly	1
187040-001	TM600 Control and Data Schematic.	2
187045-001	TM600 Control and Data PCB Assembly	1
187060-001	TM600 Spindle Control Schematic	1
187065-001	TM600 Spindle Control PCB Assembly	1
300015-001	Power Supply Schematic	1
	Addendum To 300015-001 Fold Back Circuit	1
300018-001	Power Supply PCB Assembly	1

www.commodore.ca

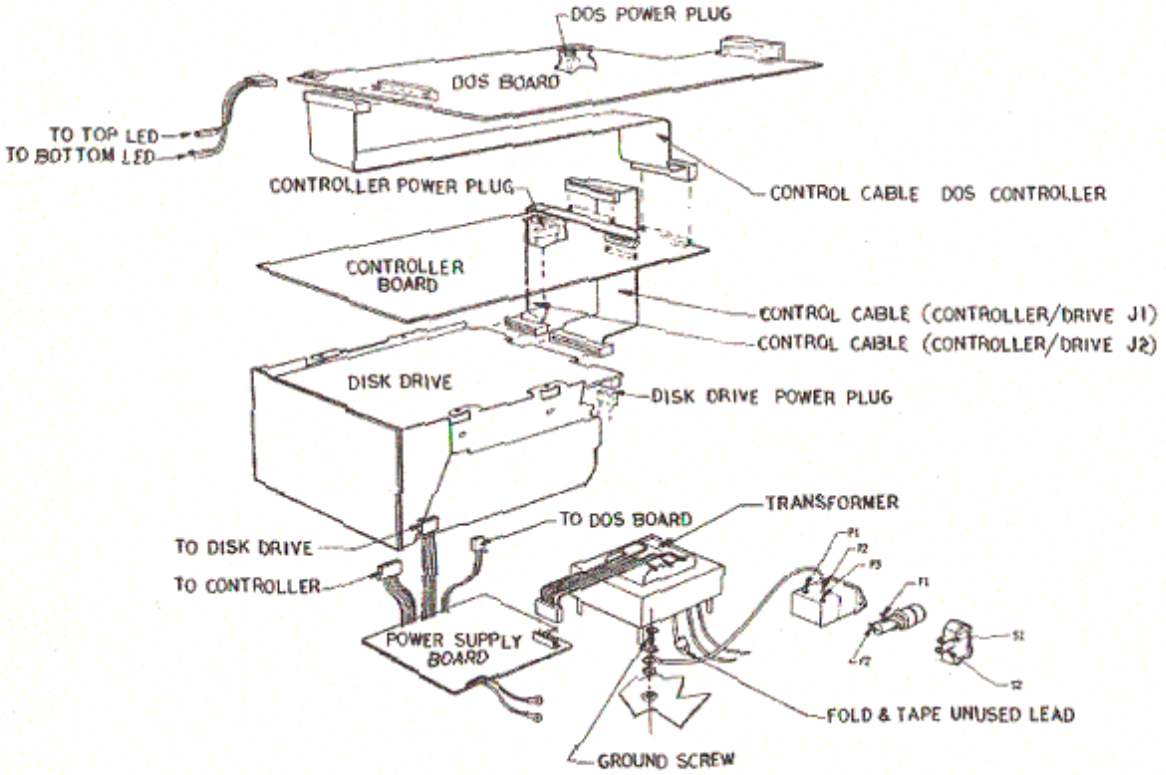

TITLE			
COMMODORE DISK SYSTEM			
SIZE	DATE	DWG NO.	REV
B	11/5/82	300520-00X	D
SCALE NONE	DO NOT SCALE DWG	SHEET 1 OF 2	

www.commodore.ca

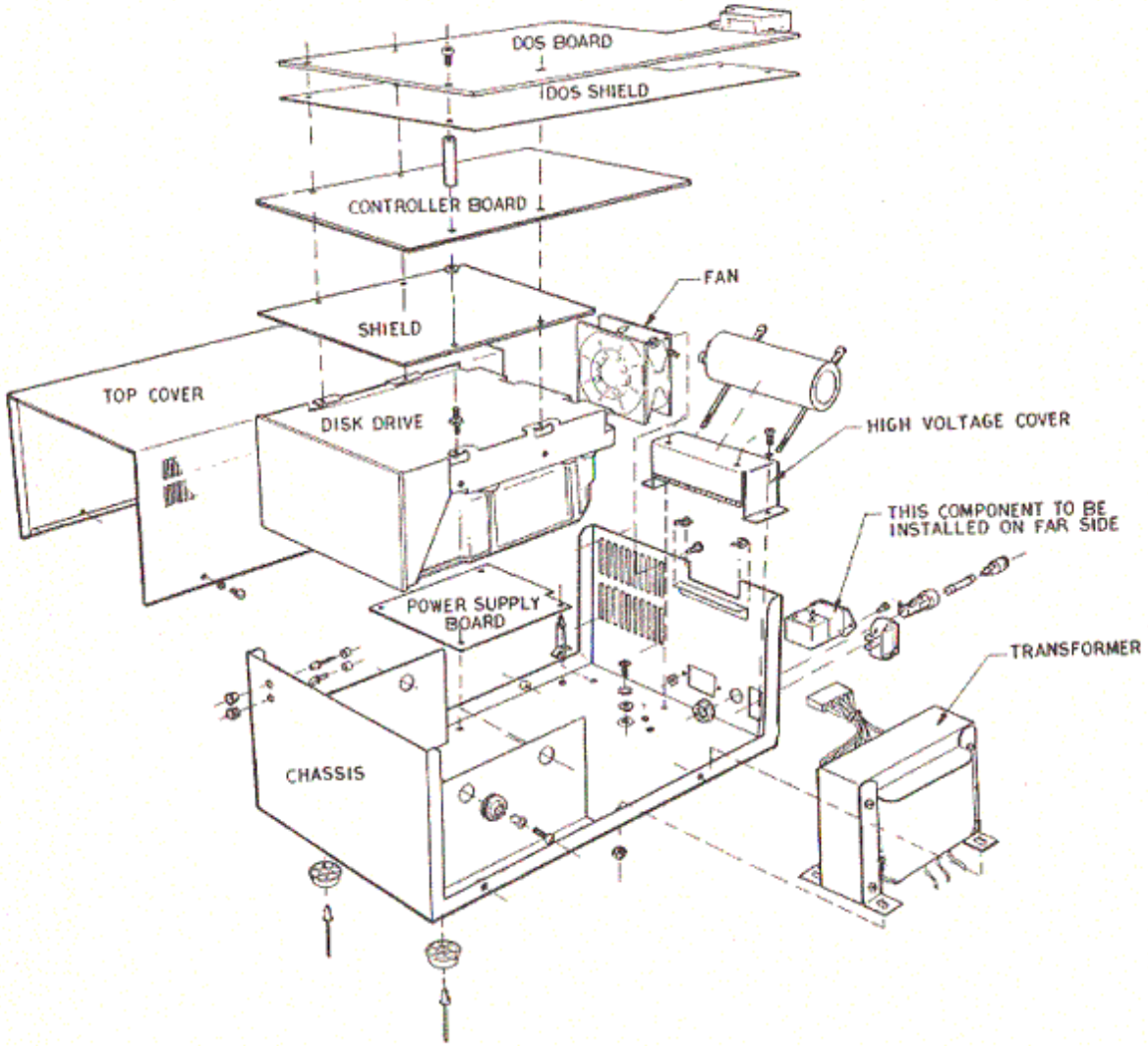

TITLE			
COMMODORE DISK SYSTEM			
SIZE B	DATE 11/5/82	DWG NO. 300520-00X	REV D
SCALE NONE		DO NOT SCALE DWG	SHEET 2 OF 2

©www.commodore.ca

CONTENTS

Section Number	Title	Page Number
SECTION 5	REPLACEMENT PROCEDURES	
	Introduction	27
5.1	Tools	27
5.2	Top Cover	27
5.3	DOS Board	27
5.4	Controller Board	28
5.5	Disk Drive	28
5.6	Power Supply Board, Linear Supply	29
5.7	Non-Warranty Repair	29
Appendix 1	Major Assemblies	A-1
Appendix 2	Recommended Spare Parts List	A-2
Appendix 3	Schematics and Assemblies	A-3

©www.commodore.ca

REVISIONS					
REV	DESCRIPTION	DATE	DR	CHK	APPR
A	RELEASE TO PRODUCTION FOR ED 500 [illegible]	[illegible]	MW	MW	[illegible]
B	REVISE FOR ED 5500 [illegible]	[illegible]	MW	MW	[illegible]

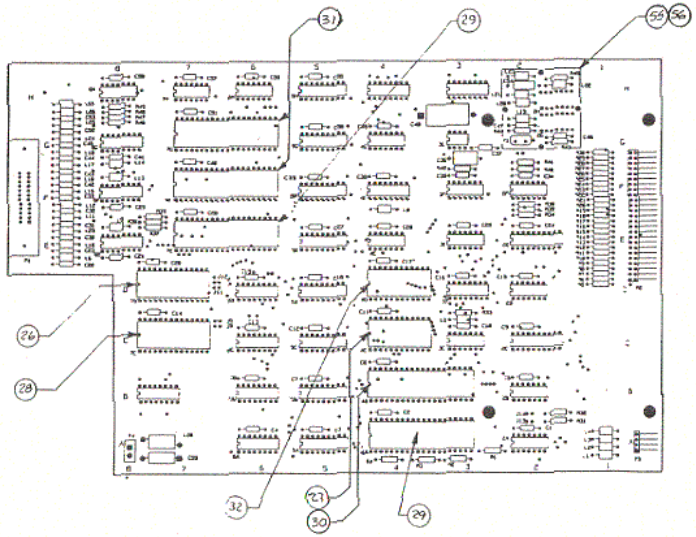

1. FOR OTHER COMPONENT LOCATION, REFER TO BOARD DESIGNATION AND B/M.

NOTES: UNLESS OTHERWISE SPECIFIED

NEXT ASSY	FIRST USE
APPLICATION	

SIGNATURES	DATE
DR M. WONG	[illegible]
CHK	
DEV	
ENGR	
PROJ. ENGR D.R.T.	[illegible]
MATL.	

www.commodore.ca

TITLE
PCB ASSY
WINCHESTER DOS/CONTROL
2764

SIZE	CODE IDENT NO.	DWG NO.	REV
D		300013-002	B

SCALE 1/1 DO NOT SCALE DWG SHEET 1 OF 1

REVISIONS					
REV	DESCRIPTION	DATE	DR	CHK	APPR
A	RELEASE TO PRODUCTION PER ED 5 5006	[illegible]	[illegible]	[illegible]	[illegible]
B	REVISE PER ED 5 5009	[illegible]	[illegible]	[illegible]	[illegible]

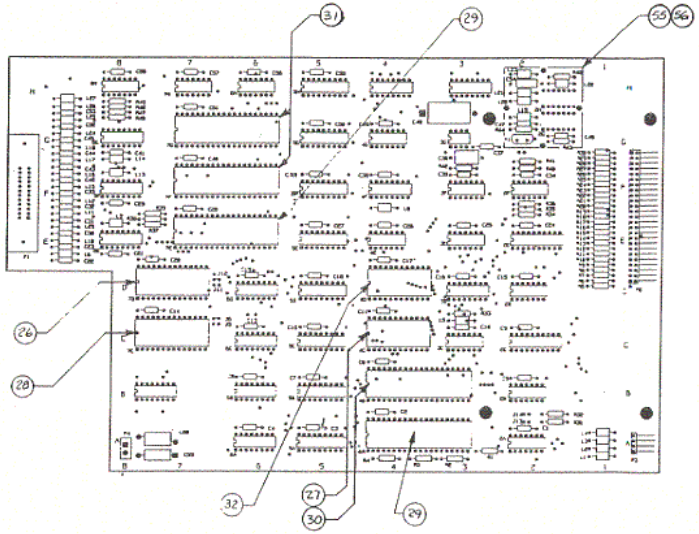

1. FOR OTHER COMPONENT LOCATION, REFER TO BOARD DESIGNATION AND B/M.

NOTES: UNLESS OTHERWISE SPECIFIED

NEXT ASSY	FIRST USE
APPLICATION	

SIGNATURES	DATE
DR H. WONG	[illegible]
CHK	
DES	
ENGR	
PROD ENGR DWT.	[illegible]

FINISH:

MATL:

www.commodore.ca

TITLE
PCB ASSY
WINCHESTER DOS/CONTROL
2764

SIZE	CODE IDENT NO.	DWG NO.	REV
D		300013-002	B
SCALE 1/1		DO NOT SCALE DWG	SHEET 1 OF 1

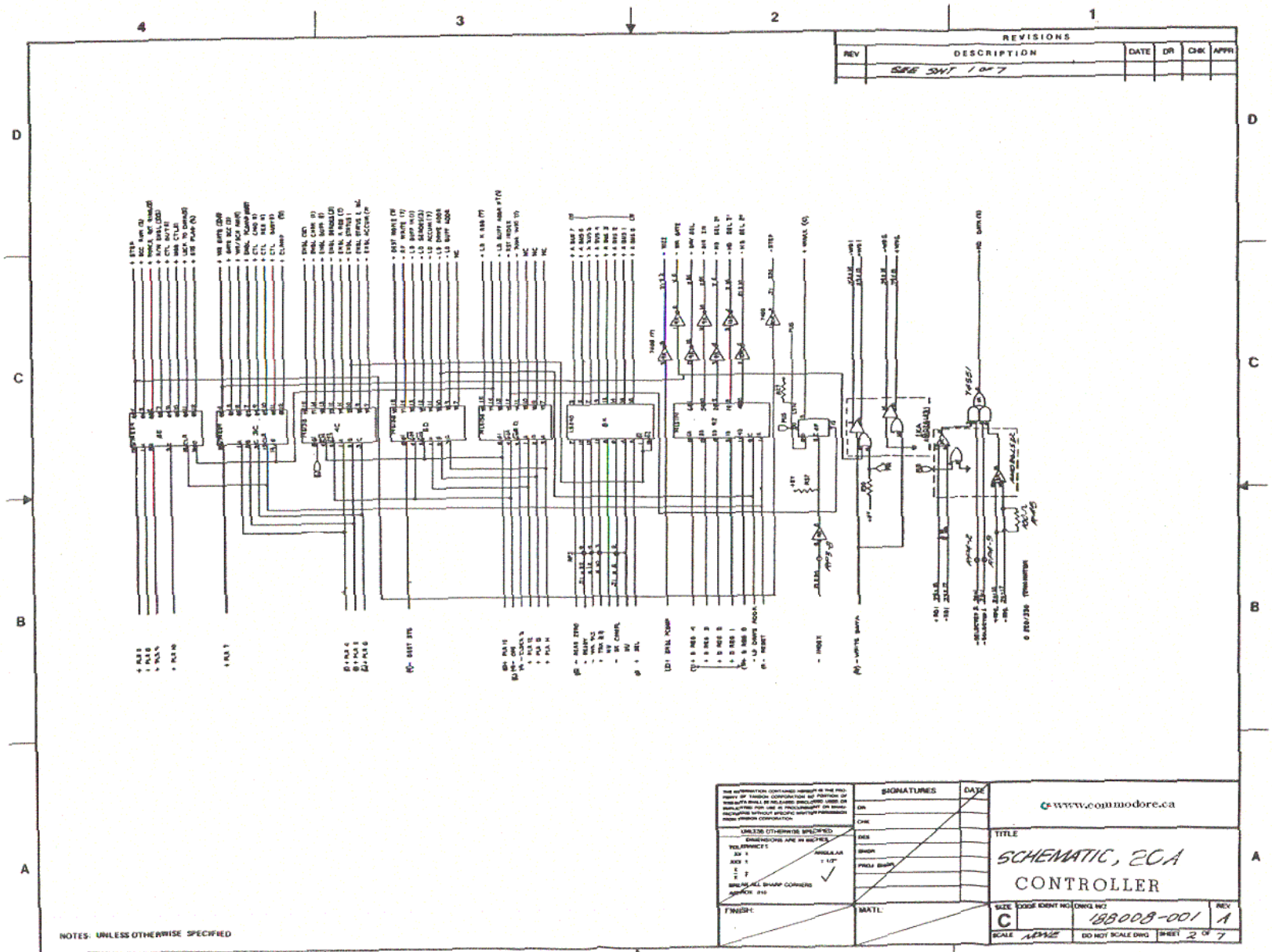

REVISIONS					
REV	DESCRIPTION	DATE	DR	CHK	APPR
	SEE SHT 1 OF 7				

NOTES: UNLESS OTHERWISE SPECIFIED

SIGNATURES	DATE
DR	
CHK	
DES	
ENGR	
PROJ ENGR	

UNLESS OTHERWISE SPECIFIED
DIMENSIONS ARE IN INCHES
TOLERANCES
XX ± .1
XXX ± .01
ANGULAR ± 1/2°
BREAK ALL SHARP CORNERS

FINISH:

MATL:

THE INFORMATION CONTAINED HEREIN IS THE PROPERTY OF TANDON CORPORATION AND PORTIONS OF THIS DATA SHALL BE RELEASED, DISCLOSED, USED OR DUPLICATED FOR USE IN PROCUREMENT OR MANUFACTURING WITHOUT SPECIFIC WRITTEN PERMISSION FROM TANDON CORPORATION.

www.commodore.ca

TITLE

SCHEMATIC, ECA
CONTROLLER

SIZE	CODE IDENT NO.	DWG NO.	REV
C		180008-001	1
SCALE NONE	DO NOT SCALE DWG	SHEET 2 OF 7	

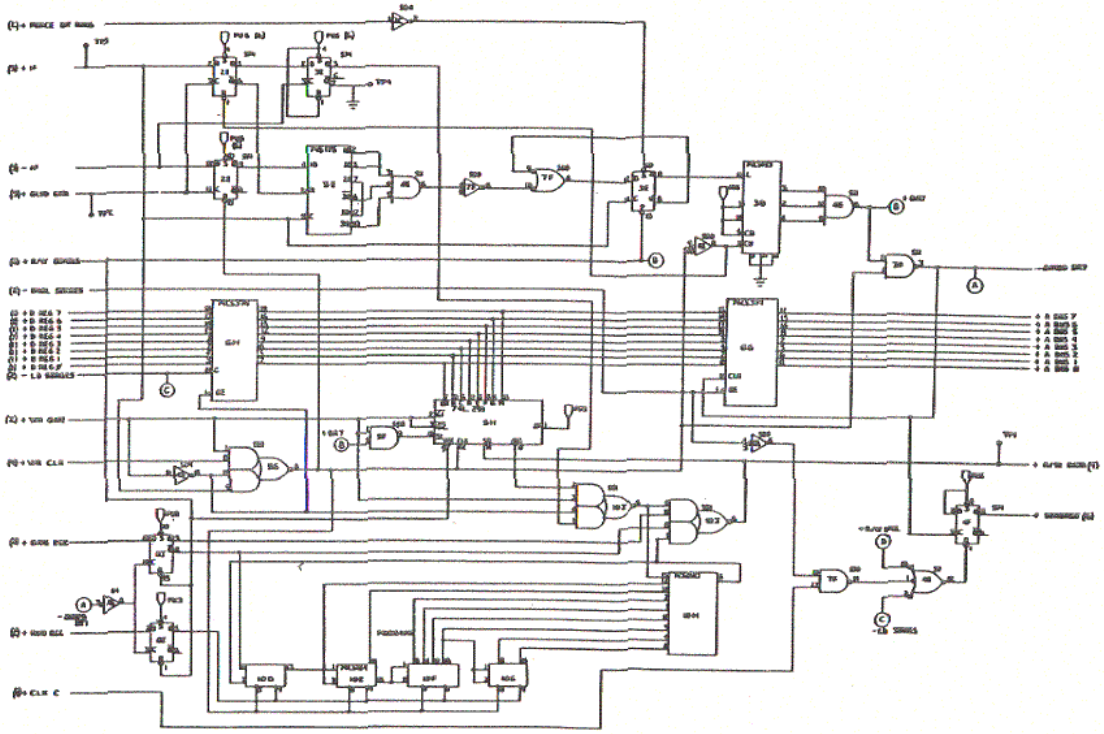

REVISIONS					
REV	DESCRIPTION	DATE	DR	CHK	APPR
	SEE SHT 1 of 7				

NOTES: UNLESS OTHERWISE SPECIFIED

SIGNATURES	DATE
DR	
CHK	
DES	
ENGR	
PROJ ENGR	

UNLESS OTHERWISE SPECIFIED
DIMENSIONS ARE IN INCHES
TOLERANCES
ANGULAR ± 1/2°
BREAK ALL SHARP CORNERS .XXX ±.010

FINISH:

MATL:

www.commodore.ca

TITLE
SCHEMATIC, 20A
CONTROLLER

SIZE	CODE IDENT NO	DWG NO	REV
C		188008-001	A

SCALE NONE DO NOT SCALE DWG SHEET 6 OF 7

REVISIONS					
REV	DESCRIPTION	DATE	DR	CHK	APPR
	SEE SHT 1 OF 7				

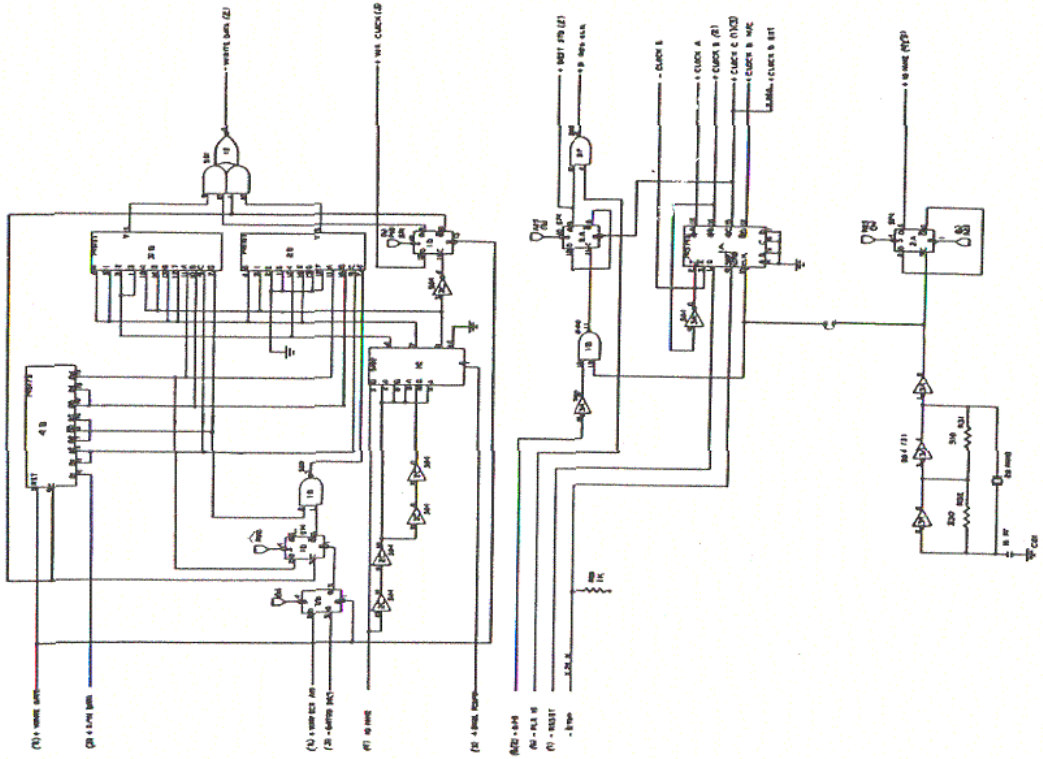

NOTES: UNLESS OTHERWISE SPECIFIED

SIGNATURES	DATE
DR	
CHK	
DES	
ENGR	
PROJ ENGR	

UNLESS OTHERWISE SPECIFIED
DIMENSIONS ARE IN INCHES
TOLERANCES
ANGULAR ± 1/2°
BREAK ALL SHARP CORNERS
FINISH:
MATL.

www.commodore.ca

TITLE
SCHEMATIC, 20A
CONTROLLER

SIZE	CODE IDENT NO.	DWG NO	REV
C		188008-001	A
SCALE NONE	DO NOT SCALE DWG.	SHEET 2 OF 7	

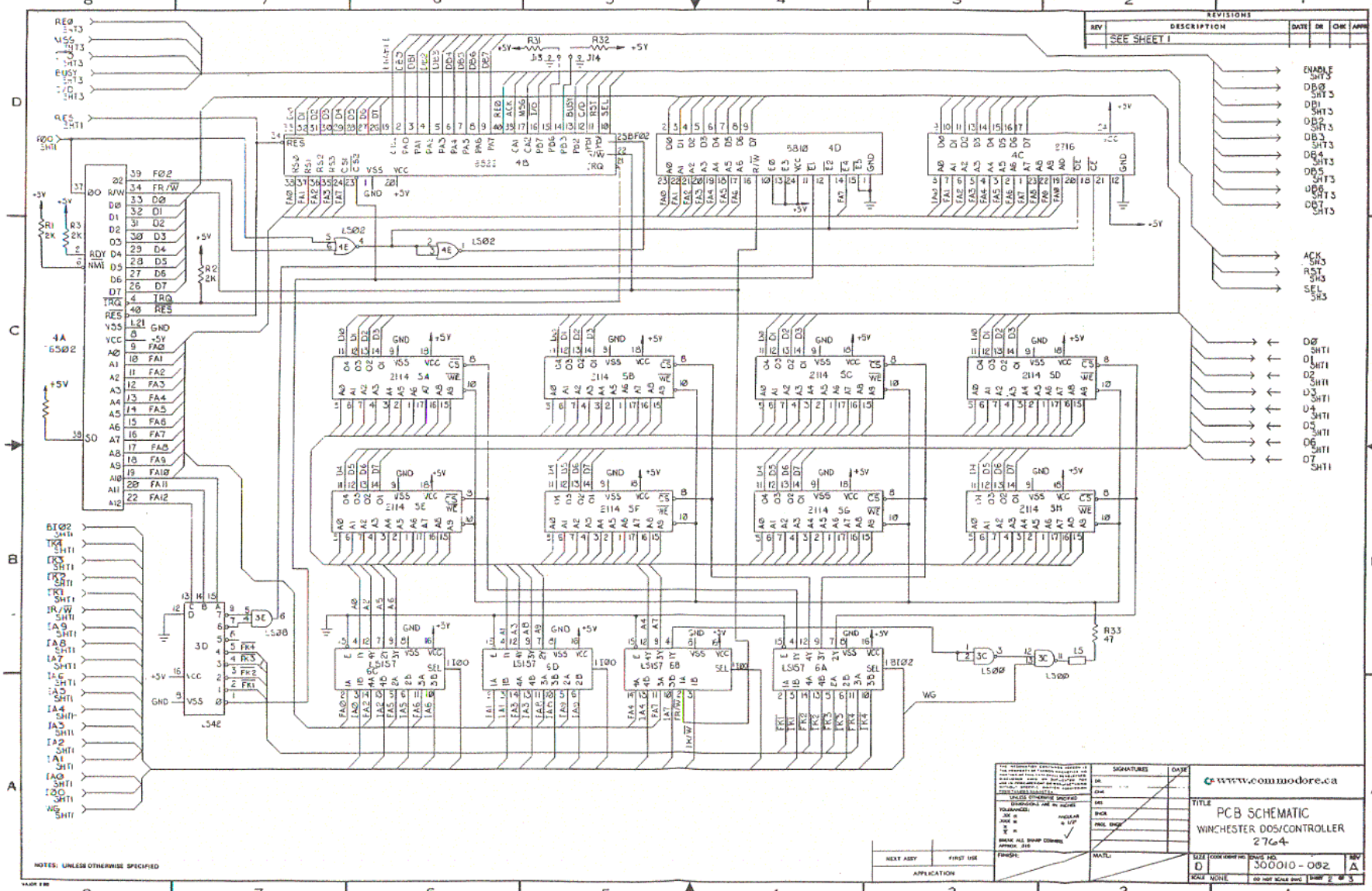
REVISIONS
REV
DESCRIPTION
DATE
DR
CHK
APPR
SEE SHEET 1
NOTES: UNLESS OTHERWISE SPECIFIED
www.commodore.ca
TITLE
PCB SCHEMATIC
WINCHESTER DOS/CONTROLLER
2764
SIZE
D
DWG NO.
300010-002
REV
A
SCALE NONE
DO NOT SCALE DWG
SHEET 2 OF 3
NEXT ASSY
FIRST USE
APPLICATION
SIGNATURES
DATE
FINISH:
MATL:
UNLESS OTHERWISE SPECIFIED
DIMENSIONS ARE IN INCHES
TOLERANCES:
BREAK ALL SHARP CORNERS
APPROX .010
ENABLE SHT3
DB0 SHT3
DB1 SHT3
DB2 SHT3
DB3 SHT3
DB4 SHT3
DB5 SHT3
DB6 SHT3
DB7 SHT3
ACK SH3
RST SH3
SEL SH3
D0 SHT1
D1 SHT1
D2 SHT1
D3 SHT1
D4 SHT1
D5 SHT1
D6 SHT1
D7 SHT1
4A
6502
8522
4B
5810
4D
2716
4C
2114
5A
5B
5C
5D
5E
5F
5G
5H
LS157
6C
6D
6B
6A
LS02
LS08
LS00
LS42
3D
R31
R32
R33
47
R1
2K
R2
2K
R3
2K
+5V
GND
VSS
VCC
WG

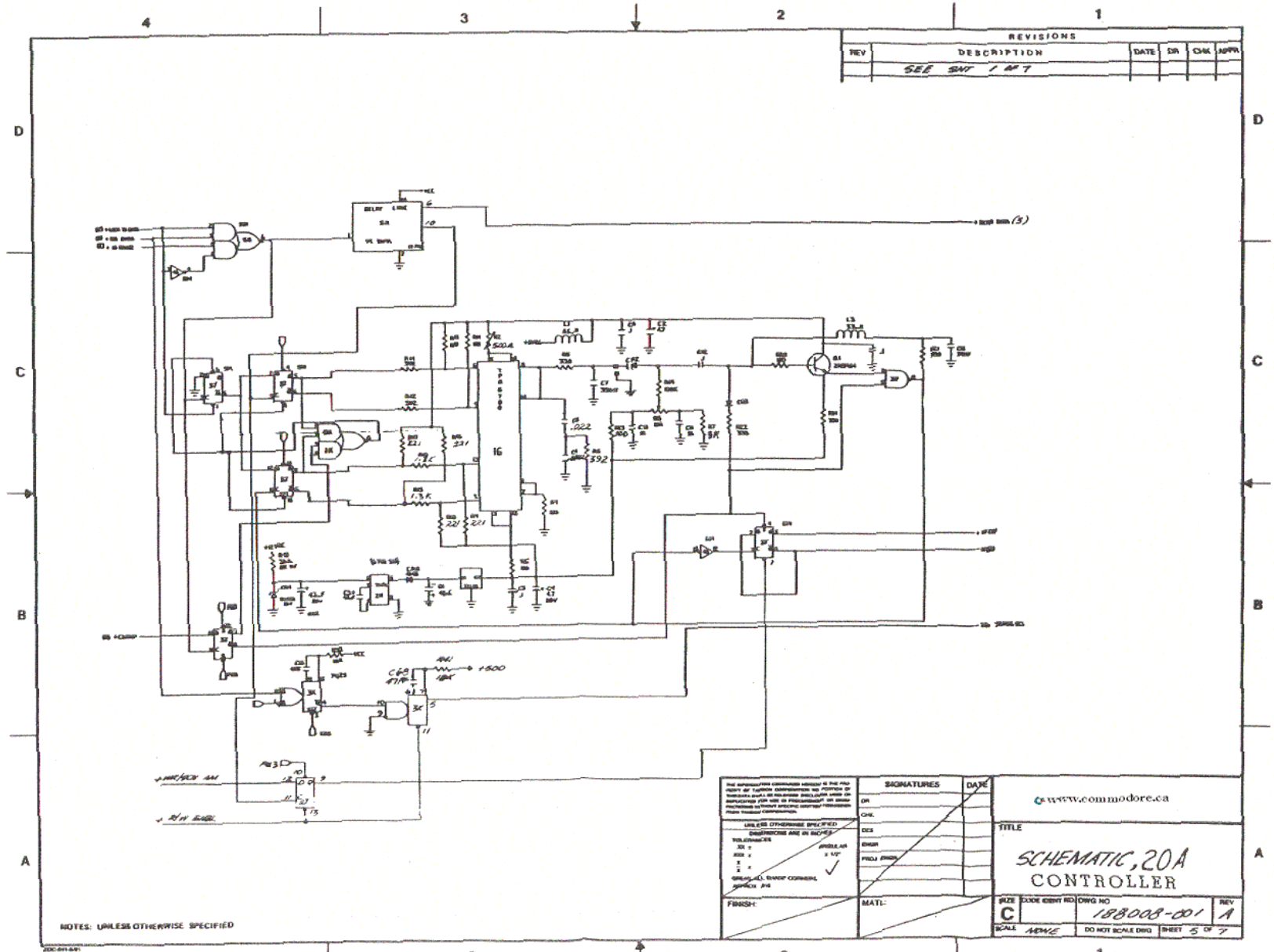
REVISIONS
REV
DESCRIPTION
DATE
DR
CHK
APPR
SEE SHT 1 OF 7
SIGNATURES
DATE
DR
CHK.
DES
ENGR
PROJ ENGR
UNLESS OTHERWISE SPECIFIED
DIMENSIONS ARE IN INCHES
TOLERANCES
FRACTIONAL
ANGULAR
FINISH:
MATL:
www.commodore.ca
TITLE
SCHEMATIC, 20A
CONTROLLER
SIZE
C
DWG NO
188008-001
REV
A
SCALE
NONE
DO NOT SCALE DWG
SHEET 5 OF 7
NOTES: UNLESS OTHERWISE SPECIFIED

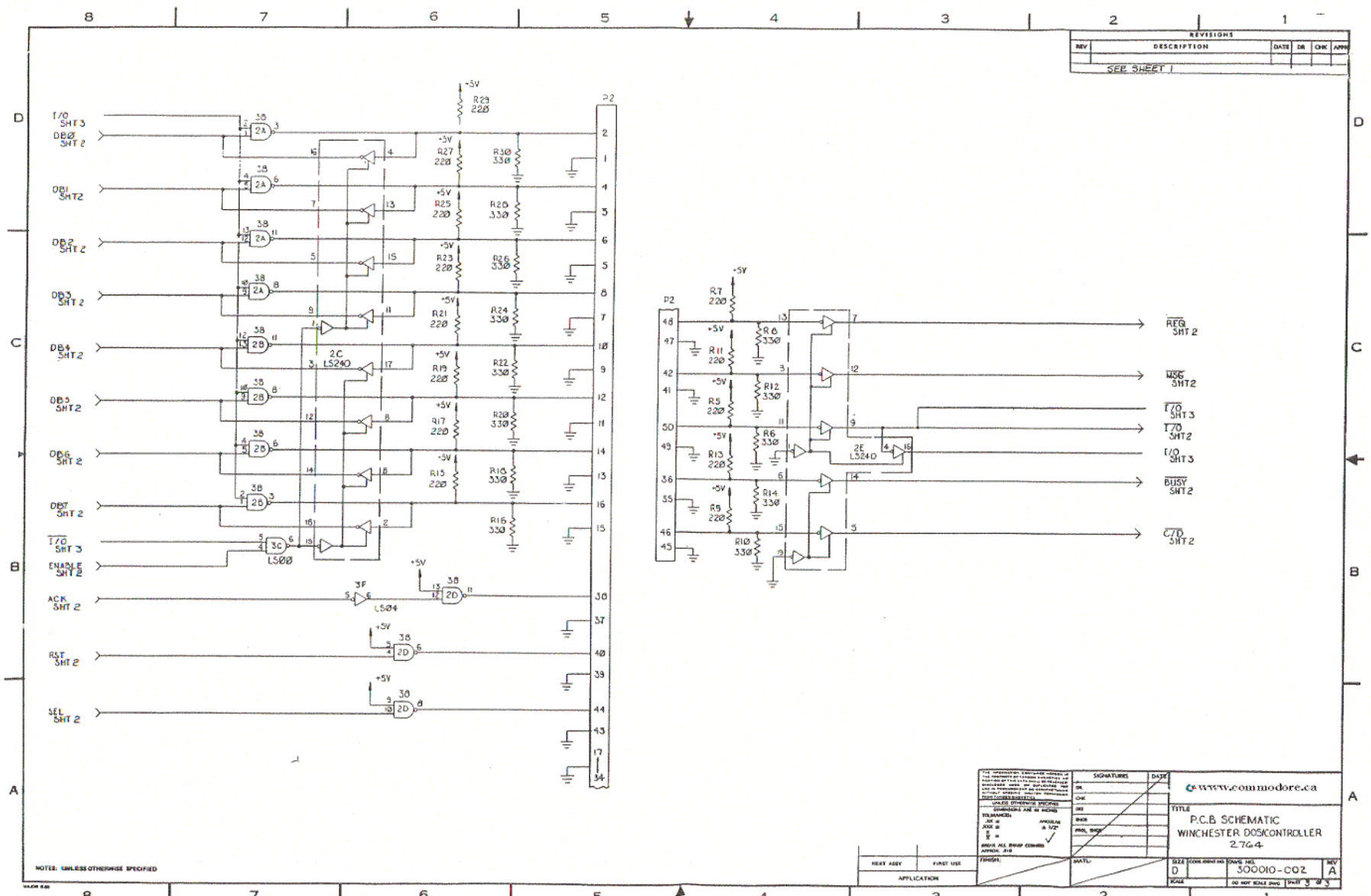
REVISIONS
REV
DESCRIPTION
DATE
DR
CHK
APPR
SEE SHEET 1
I/O SHT 3
DB0 SHT 2
DB1 SHT 2
DB2 SHT 2
DB3 SHT 2
DB4 SHT 2
DB5 SHT 2
DB6 SHT 2
DB7 SHT 2
I/O SHT 3
ENABLE SHT 2
ACK SHT 2
RST SHT 2
SEL SHT 2
2C LS240
LS00
LS04
2E LS240
P2
+5V
R29 220
R27 220
R25 220
R23 220
R21 220
R19 220
R17 220
R15 220
R30 330
R28 330
R26 330
R24 330
R22 330
R20 330
R18 330
R16 330
R7 220
R11 220
R5 220
R13 220
R9 220
R8 330
R12 330
R6 330
R14 330
R10 330
REQ SHT 2
MSG SHT 2
I/O SHT 3
I/O SHT 2
I/O SHT 3
BUSY SHT 2
C/D SHT 2
NOTES: UNLESS OTHERWISE SPECIFIED
SIGNATURES
DATE
DR.
CHK.
ENG.
MGR.
PROJ. MGR.
MATL:
FINISH:
NEXT ASSY
FIRST USE
APPLICATION
www.commodore.ca
TITLE
P.C.B. SCHEMATIC
WINCHESTER DOSCONTROLLER
2704
SIZE
D
DWG NO.
300010-002
REV
A
SCALE
DO NOT SCALE DWG
SHEET 3 OF 3

REVISIONS					
REV	DESCRIPTION	DATE	DR	CHK	APPR
A	RELEASE TO PROD. PER E.O. 550075	[illegible]	MW	[illegible]	[illegible]

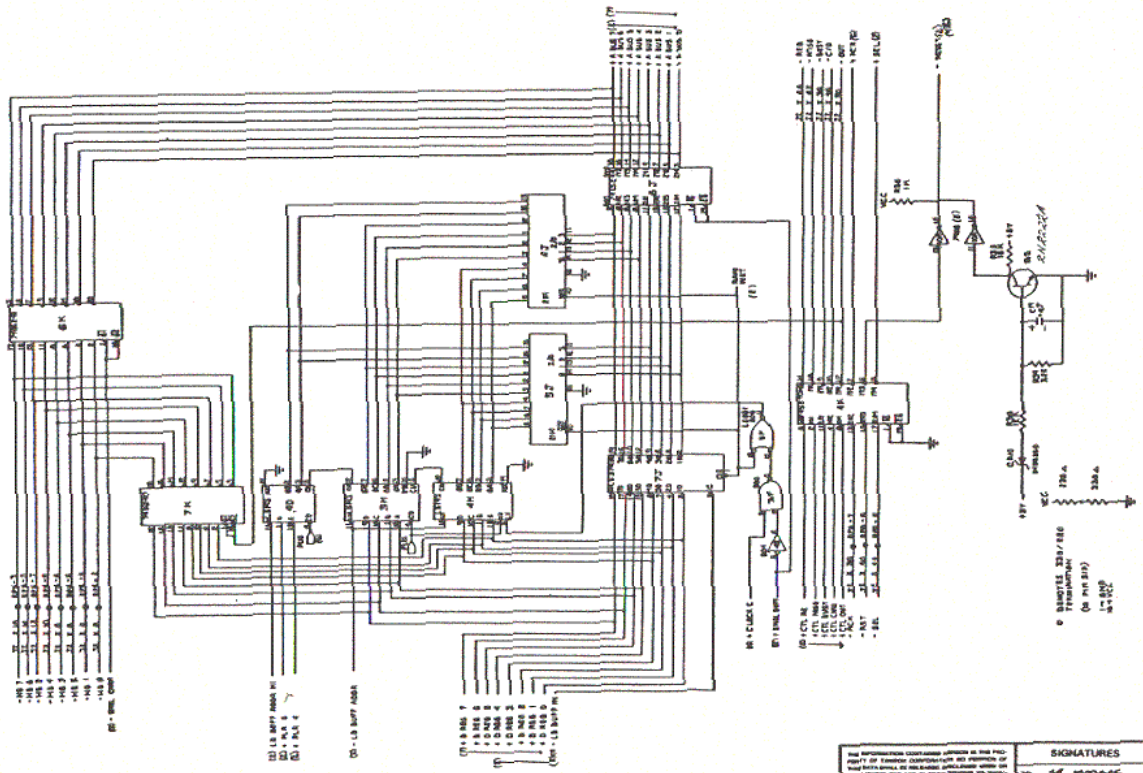

NOTES: UNLESS OTHERWISE SPECIFIED

SIGNATURES		DATE
DR	M. WONG	[illegible]
CHK		
DES		
ENGR	M. WONG	[illegible]
PROJ. ENGR	R.W. Torma	[illegible]

UNLESS OTHERWISE SPECIFIED
DIMENSIONS ARE IN INCHES
TOLERANCES
.XX ±
.XXX ±
X ±
X ±
BREAK ALL SHARP CORNERS
APPROX. ±1/2
ANGULAR
± 1/2°

FINISH:

MATL:

www.commodore.ca

TITLE
SCHEMATIC, 20A
CONTROLLER

SIZE	CODE IDENT NO	DWG NO	REV
C		188008-001	A
SCALE NONE		DO NOT SCALE DWG	SHEET 1 OF 7

REVISIONS					
REV	DESCRIPTION	DATE	DR	CHK	APPR
	SEE SHT 1 OF 7				

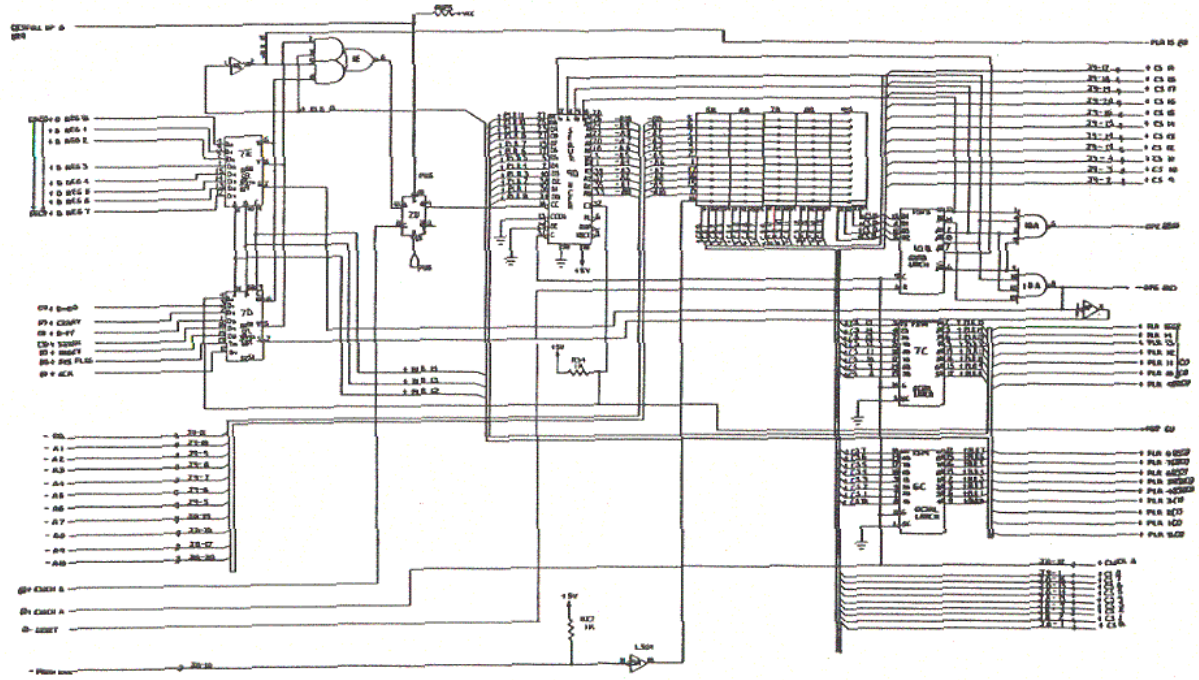

NOTES: UNLESS OTHERWISE SPECIFIED

SIGNATURES	DATE
DR	
CHK	
DES	
ENGR	
PROJ ENGR	
MATL	

FINISH:

www.commodore.ca

TITLE

SCHEMATIC, 20A

CONTROLLER

SIZE	CODE IDENT NO	DWG NO	REV
C		188008-001	A
SCALE NONE		DO NOT SCALE DWG	SHEET 6 OF 7

REVISIONS					
REV	DESCRIPTION	DATE	DR	CHK	APPR
	SEE SHT 1 OF 7				

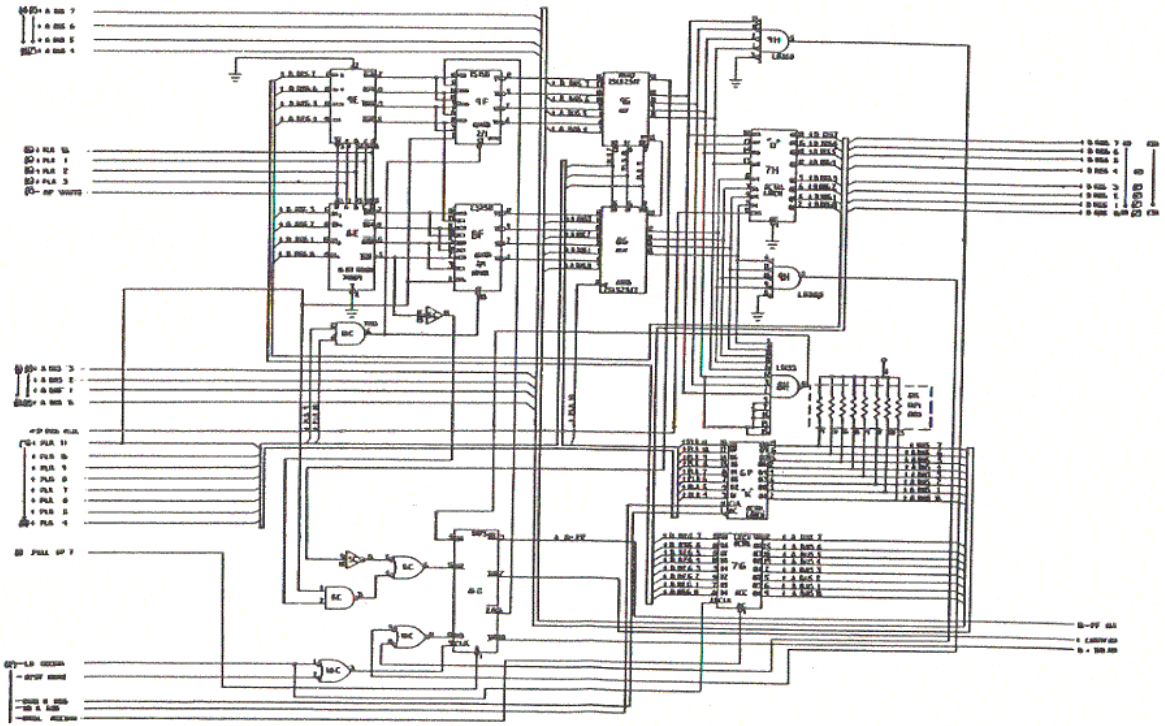

NOTES: UNLESS OTHERWISE SPECIFIED

SIGNATURES	DATE
DR	
CHK	
DES	
ENGR	
PROJ ENGR	

UNLESS OTHERWISE SPECIFIED
DIMENSIONS ARE IN INCHES
TOLERANCES
XX ±
XXX ±
X ±
ANGULAR ± 1/2°

FINISH:

MATL:

www.commodore.ca

TITLE
SCHEMATIC, 20A
CONTROLLER

SIZE	CODE IDENT NO	DWG NO	REV
C		1880008-001	A
SCALE NONE	DO NOT SCALE DWG	SHEET 7 OF 7	

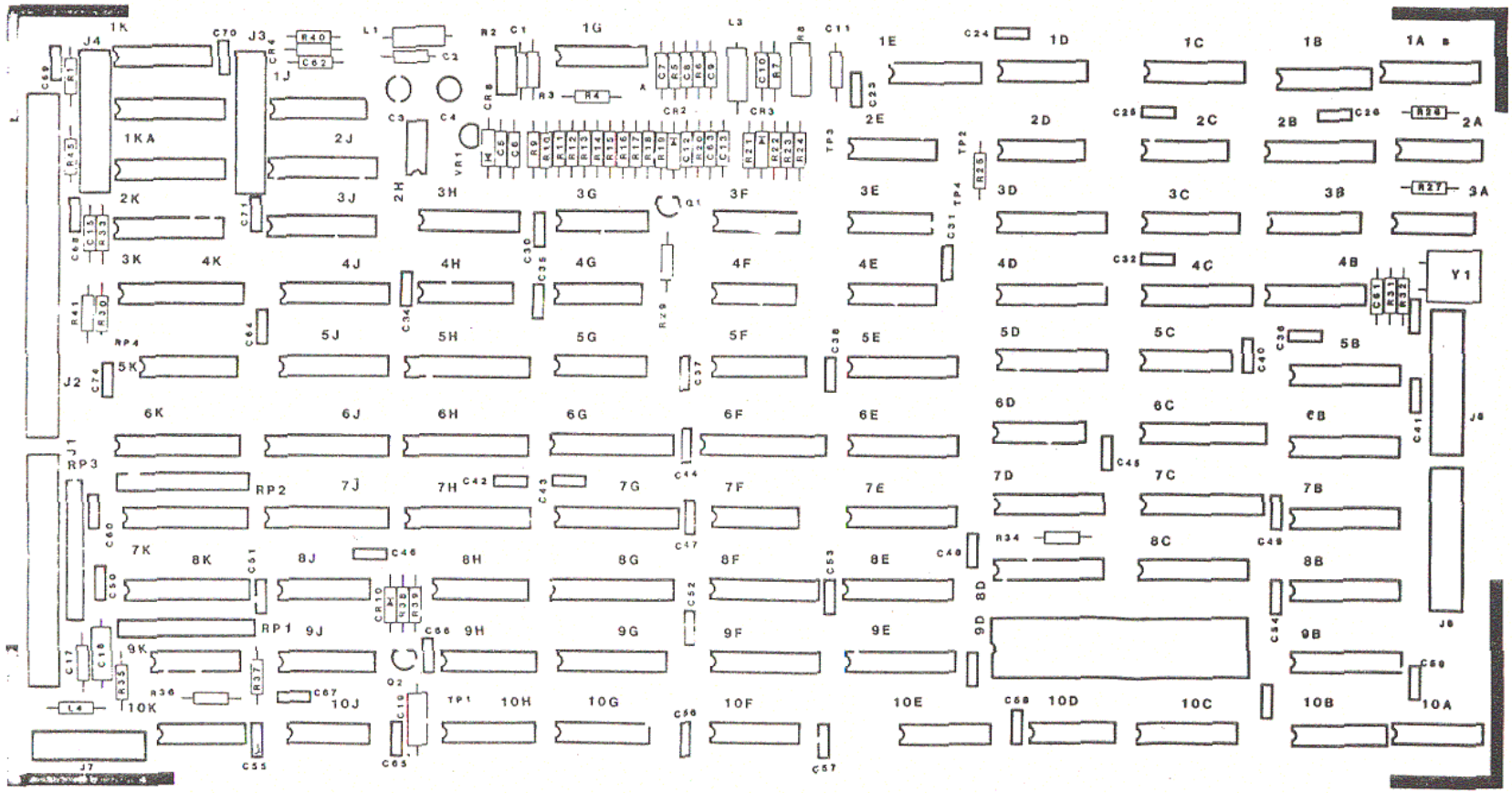

CONTROLLER PCBA

www.commodore.ca

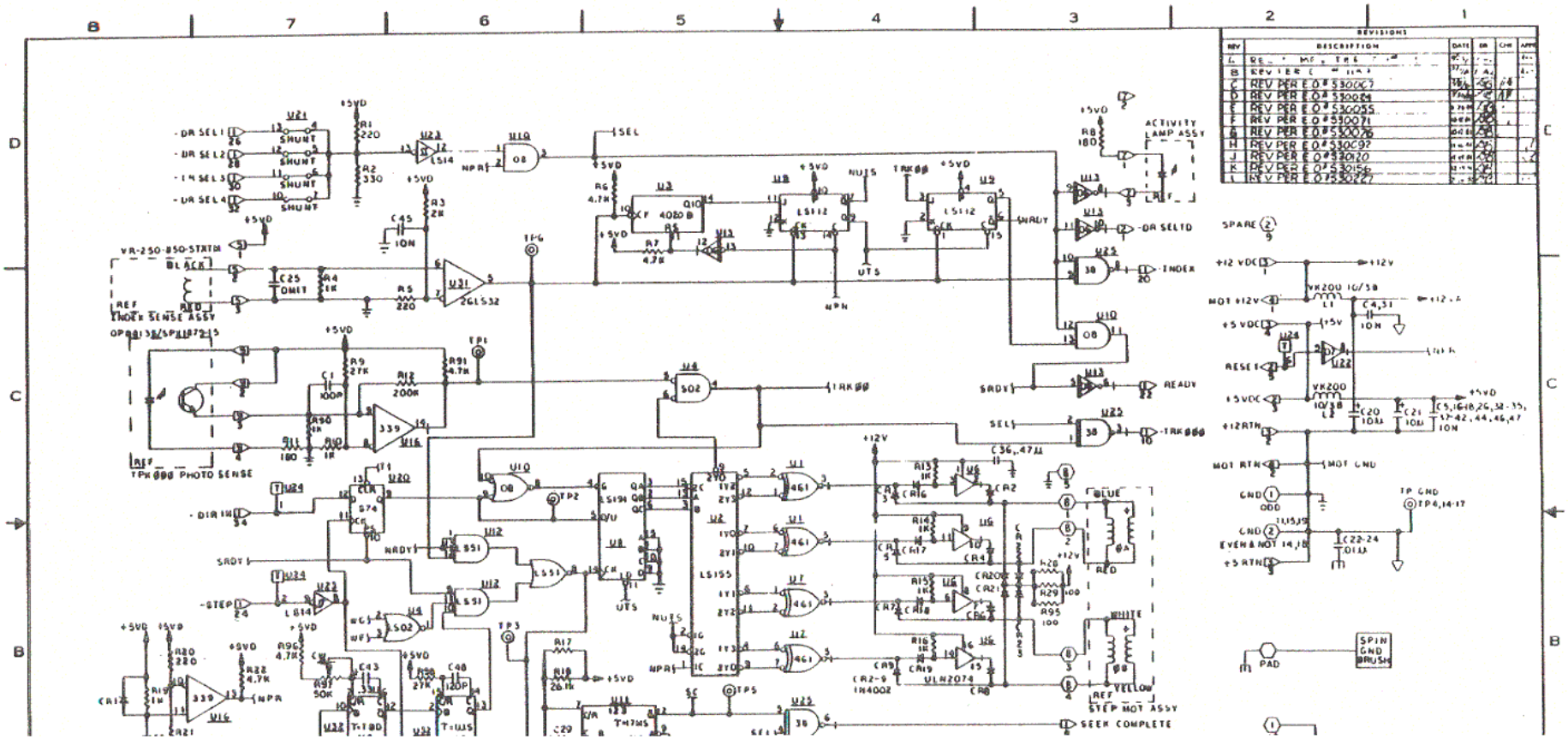
REVISIONS
REV
DESCRIPTION
DATE
DR
CHK
APPR
B REV PER E.O.# 530067
D REV PER E.O.# 530084
E REV PER E.O.# 530055
F REV PER E.O.# 530071
G REV PER E.O.# 530076
H REV PER E.O.# 530092
J REV PER E.O.# 530120
K REV PER E.O.# 530156
L REV PER E.O.# 530227
ACTIVITY LAMP ASSY
SPARE
+12 VDC
MOT +12V
+5 VDC
RESET
+12RTN
MOT RTN
MOT GND
GND
ODD
EVEN & NOT 14,18
+5 RTN
TP GND
TP4,14-17
PAD
SPIN GND BRUSH
SEEK COMPLETE
STEP MOT ASSY
INDEX SENSE ASSY
TPK000 PHOTO SENSE
-DR SEL1
-DR SEL2
-DR SEL3
-DR SEL4
SHUNT
VR-250-850-STATM
BLACK
RED
REF
+5VD
+12V
SEL
TRK00
READY
SRDY
NRDY
NPR
UTS
NUTS
-DR SELTD
-INDEX
-TRK000
-DIR IN
-STEP
LS14
LS112
LS155
LS191
LS51
LS02
LS74
LS14
ULN2074
1N4002
TM7MS
BLUE
WHITE
YELLOW
RED
TP1
TP2
TP3
TP5
TP6

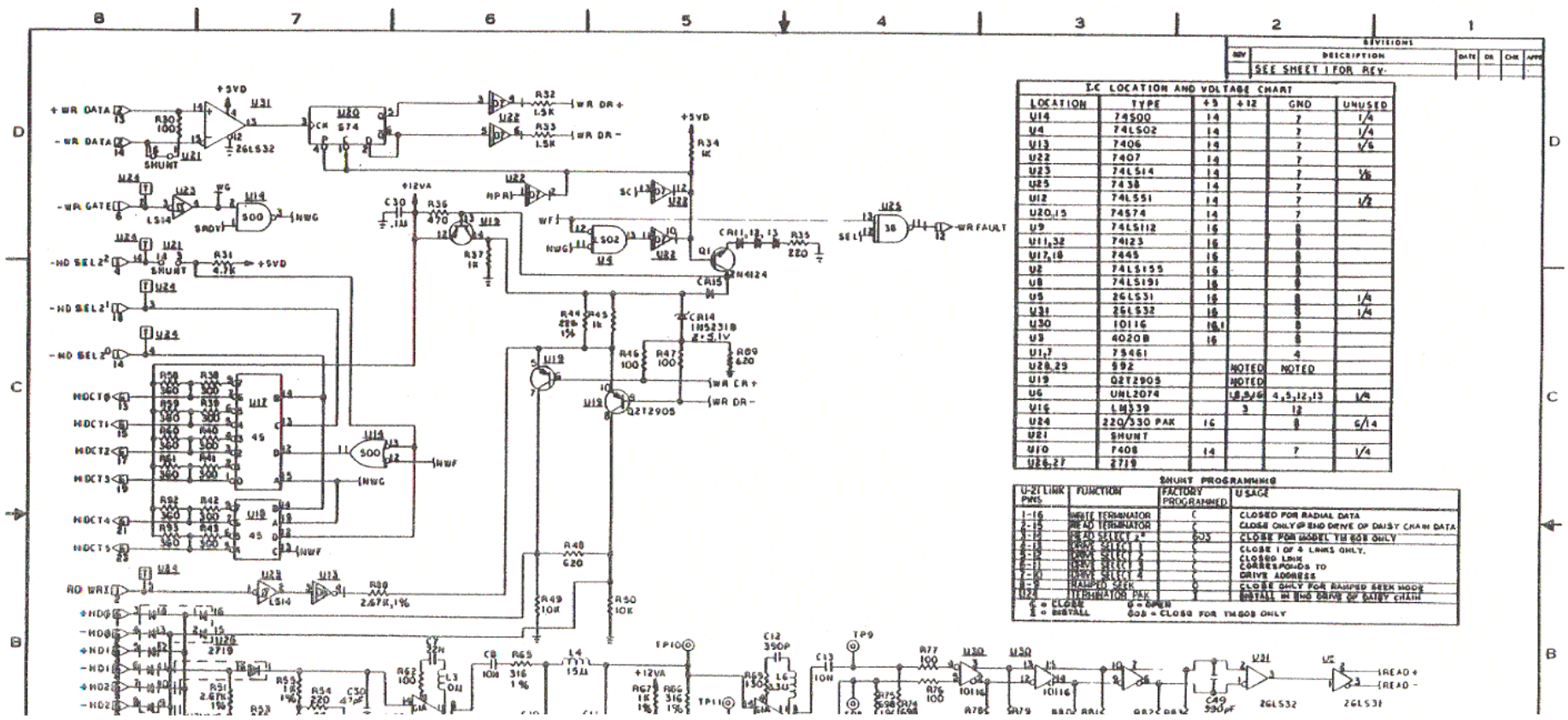

REVISIONS					
REV	DESCRIPTION	DATE	DR	CHK	APP
	SEE SHEET 1 FOR REV.				

I.C LOCATION AND VOLTAGE CHART

LOCATION	TYPE	+5	+12	GND	UNUSED
U14	74S00	14		7	1/4
U4	74LS02	14		7	1/4
U13	7406	14		7	1/6
U22	7407	14		7	
U23	74LS14	14		7	1/6
U29	7438	14		7	
U12	74LS51	14		7	1/2
U20,15	74S74	14		7	
U9	74LS112	16		8	
U11,32	74123	16		8	
U17,18	7445	16		8	
U2	74LS155	16		8	
U8	74LS191	16		8	
U5	26LS31	16		8	1/4
U31	26LS32	16		8	1/4
U30	10116	16.1		8	
U3	4020B	16		8	
U1,7	75461			4	
U28,29	592		NOTED	NOTED	
U19	Q2T2905		NOTED		
U6	UNL2074		18,8,16	4,5,12,13	1/4
U16	LM339		3	12	
U24	220/330 PAK	16		8	6/14
U21	SHUNT				
U10	7408	14		7	1/4
U26,27	2719				

SHUNT PROGRAMMING

U-21 LINK PINS	FUNCTION	FACTORY PROGRAMMED	USAGE
1-16	WRITE TERMINATOR	C	CLOSED FOR RADIAL DATA
2-15	READ TERMINATOR	C	CLOSE ONLY @ END DRIVE OF DAISY CHAIN DATA
3-14	READ SELECT 2*	OUT	CLOSE FOR MODEL TM 608 ONLY
4-13	DRIVE SELECT 1	C	CLOSE 1 OF 4 LINKS ONLY.
5-12	DRIVE SELECT 2	C	CLOSED LINK
6-11	DRIVE SELECT 3	C	CORRESPONDS TO
7-10	DRIVE SELECT 4	C	DRIVE ADDRESS
8-9	RAMPED SEEK	O	CLOSE ONLY FOR RAMPED SEEK MODE
U22	TERMINATOR PAK	I	INSTALL IN END DRIVE OF DAISY CHAIN

C = CLOSE O = OPEN
I = INSTALL 608 = CLOSE FOR TM 608 ONLY

REV	DESCRIPTION	DATE	BY	CHK	APPR
B	REV & REDRAWN PER [illegible]	[illegible]	[illegible]		[illegible]
C	REV PER E.O. 530007	[illegible]	[illegible]		[illegible]
D	REV PER E.O. 530023	[illegible]	[illegible]		[illegible]
E	REV PER E.O. 530055	[illegible]	[illegible]		[illegible]
F	REV PER E.O. 530071	[illegible]	[illegible]		[illegible]
G	REV PER E.O. 530015	[illegible]	[illegible]		[illegible]
J	REV PER E.O. 530092	[illegible]	[illegible]		[illegible]
K	REV PER E.O. 530120	[illegible]	[illegible]		[illegible]
L	REV PER E.O. 530156	[illegible]	[illegible]		[illegible]
M	REV PER E.O. 530167	[illegible]	[illegible]		[illegible]

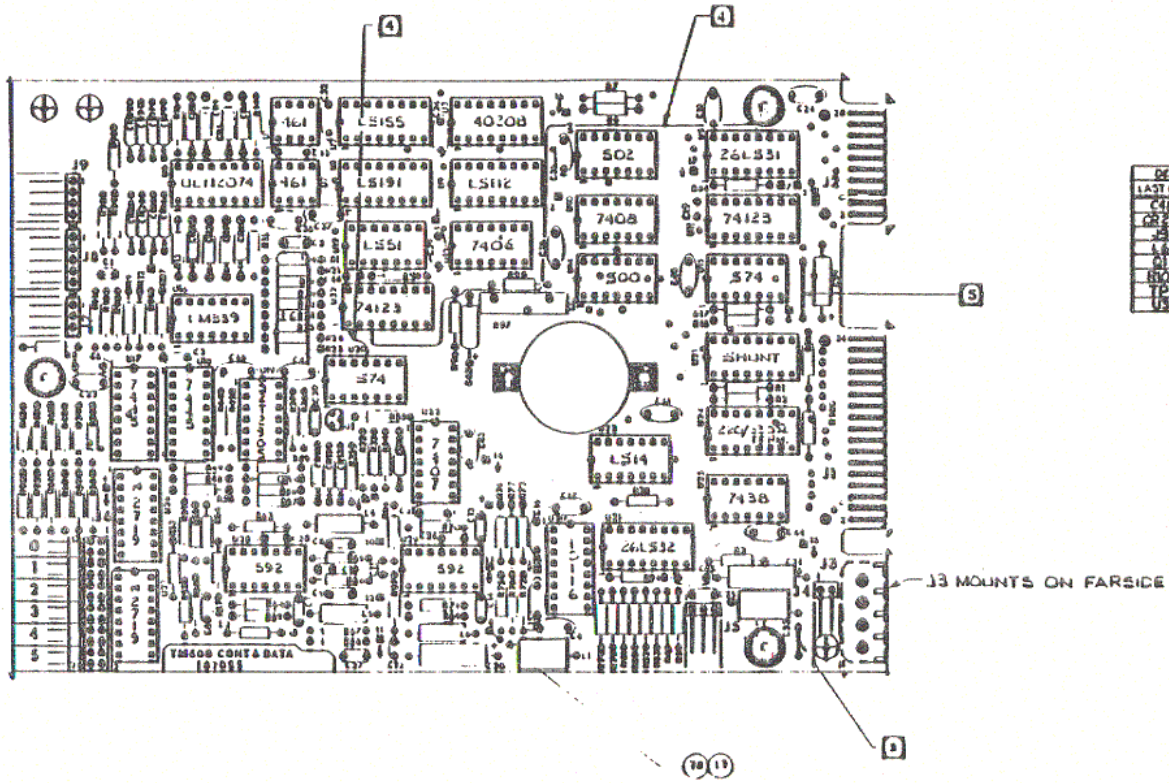

DESIGNATOR ASSEMBLY GUIDE		
LAST USED	[illegible]	[illegible]
C48	C19	C28-BUSS
CR24	CR10	
J9		
L6		L3-05
Q1		
R100	R17,R85	
TP19		
U32		

5 JUMPER PER E.O. 530050.

4 JUMPER PER E.O. 530024.

3 SOLDER #24 AWG UNINSULATED TIN COATED SOLID COPPER WIRE. MAY SUBSTITUTE 1/4W RESISTOR LEAD WIRE.

2. REF DOCUMENT: 187040-001 - CIRCUIT SCHEMATIC
187042-001 - ARTWORK

1. SEE SHEET 1 THRU 3 FOR PART LIST

TM600

www.commodore.ca

TITLE ASSEMBLY, TM600 CONTROL & DATA

SIZE D | DWG NO 187045-001 | REV M

SCALE 2/1

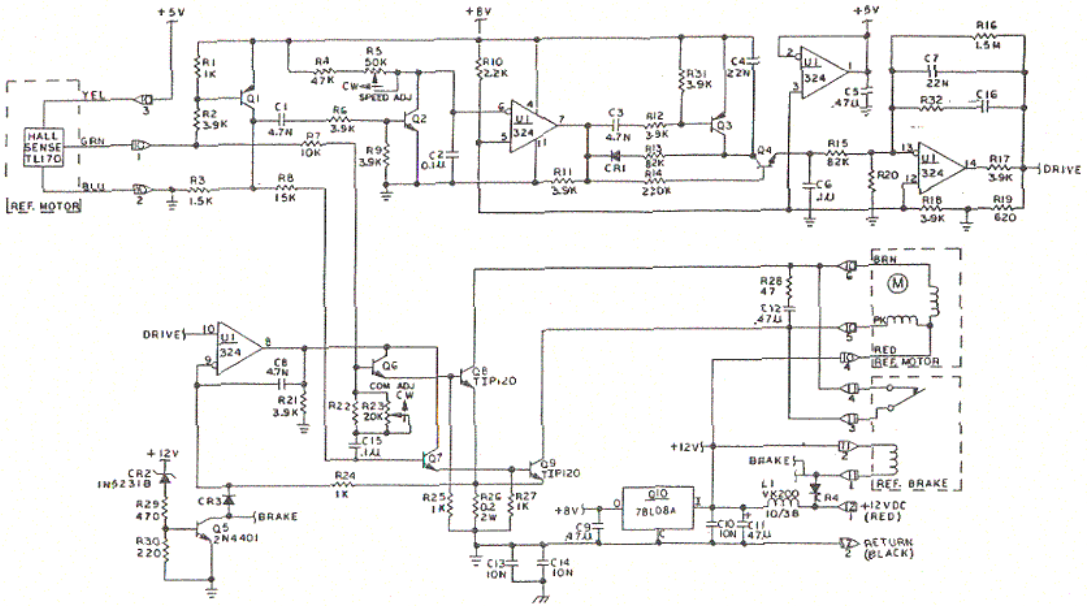

REVISIONS					
REV.	DESCRIPTION	DATE	DR	CHK	APPR
B	REV PER E.O.™ 11559				
C	REV PER E.O.™ 11658				
D	REV PER E.O. 530006				
E	REV PER E.O. 530043				

REFERENCE DESIGNATORS	
LAST USED	NOT USED
C16	
CR4	
J3	
L1	
Q10	
R32	
U1	

7. UNVALUED COMPONENTS ARE OMITTED.
6. Y OR Y DENOTES CONNECTOR X, PIN Y.
5. PNP TRANSISTORS ARE 2N4125.
4. NPN TRANSISTORS ARE 2N4124.
3. DIODES ARE IN4446 OR EQUIV.
2. CAPACITORS ARE 25V, 10%, PF, NF, OR UF.
1. RESISTORS ARE IN OHMS, 1/4W, 5%.

NOTES: UNLESS OTHERWISE SPECIFIED

www.commodore.ca

TITLE: CIRCUIT SCHEMATIC, TM600 SPINDLE CONTROL

SIZE D | 187060-001 | REV E

NEXT ASSY | FINISH | MATL | APPLICATION | USED ON

REVISIONS					
REV	DESCRIPTION	DATE	DR	CHK	APPR
B	[illegible]	[illegible]	[illegible]		[illegible]
C	REV PER E.O. 11561	[illegible]	[illegible]		[illegible]
D	REV PER E.O. 530006	[illegible]	[illegible]	[illegible]	[illegible]
E	REV PER E.O. 530043	[illegible]	[illegible]	[illegible]	[illegible]
F	REV PER E.O. 530201	[illegible]	[illegible]		[illegible]

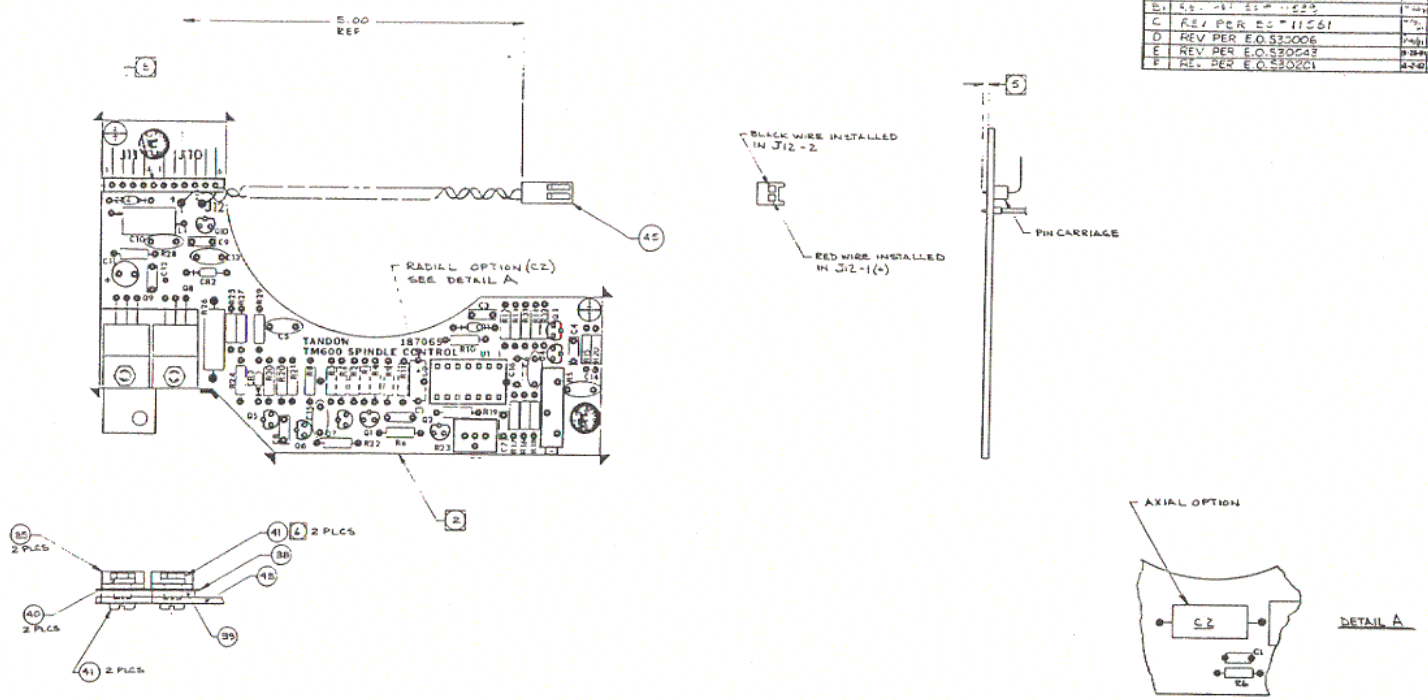

7. REF DOCUMENT : 187060-001 - CIRCUIT SCHEMATIC
187061-001 - ARTWORK

6. TORQUE 4.5 INCH LBS. NOMINAL.

5. MAX LENGTH OF COMPONENT LEADS BELOW SOLDER SIDE BOARD AFTER ASSEMBLY & TRIMMING SHALL NOT EXCEED .08 INCH.

4. COMPONENT HEIGHT, EXCEPT C11, SHALL NOT EXCEED .45 INCH ABOVE BOARD. CAPACITOR, C11, NOT TO EXCEED .50 INCH ABOVE BOARD.

3. CUT PIN TANGENT TO PIN CARRIAGE.

2. THIS ASSEMBLY SHALL BE MADE FROM P.C.B DETAIL 187063-001

1. ASSEMBLY PER STANDARD MANUFACTURING METHODS.

NOTES : UNLESS OTHERWISE SPECIFIED

USED ON TM600

SIGNATURES	DATE
DR	
CHK	
DR	
ENGR	
PROJ ENGR	
MATL	

www.commodore.ca

TITLE: SPINDLE CONTROL ASSY TM600

SIZE	CODE IDENT NO	DWG NO	REV
D		187065-001	F

SCALE | DO NOT SCALE DWG | SHEET 3 OF 5

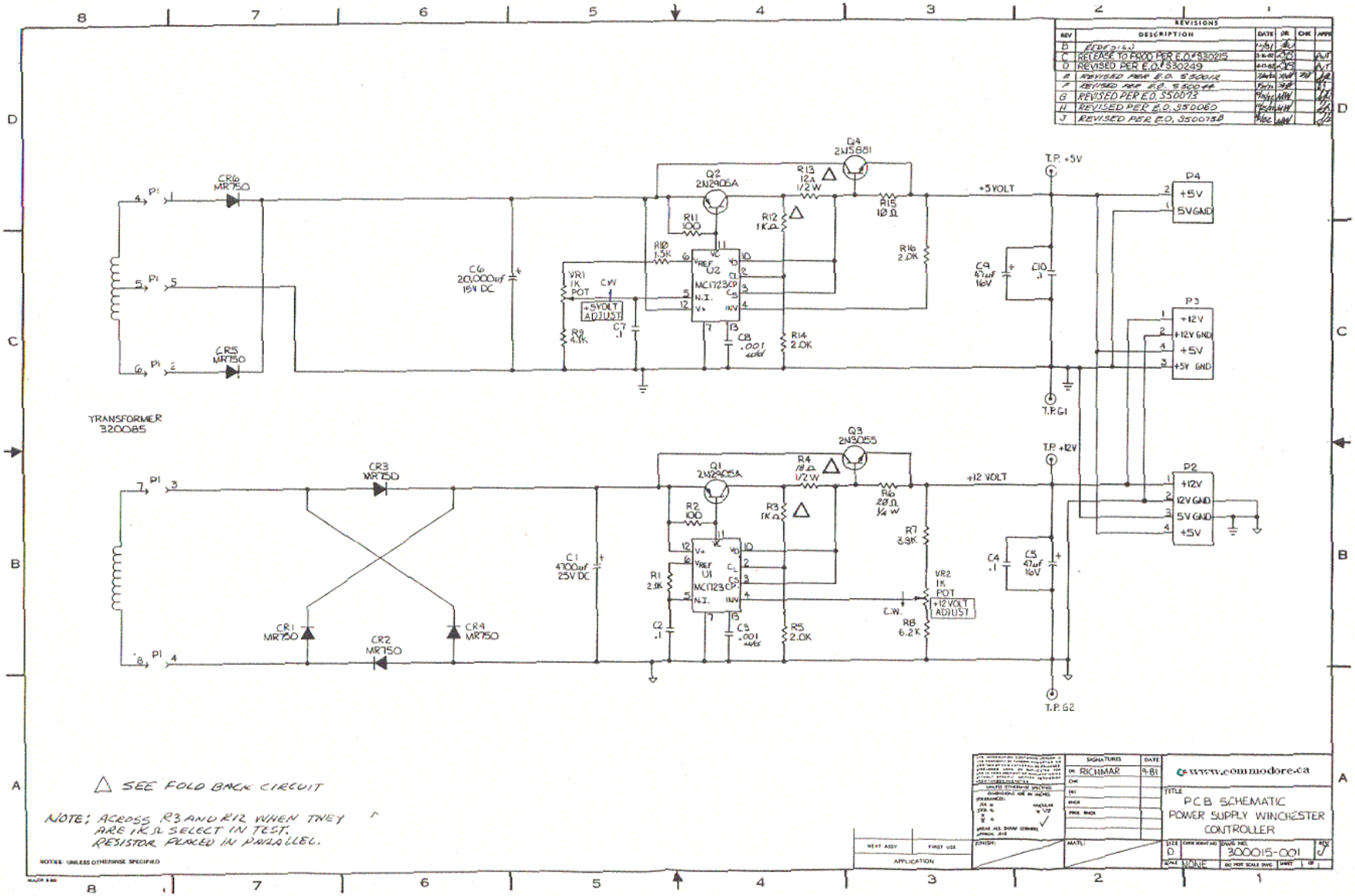
REVISIONS
REV | DESCRIPTION | DATE | DR | CHK | APPR
B | REDESIGN
C | RELEASE TO PROD PER E.O. #S30215
D | REVISED PER E.O. #S30249
E | REVISED PER E.O. S50012
F | REVISED PER E.O. S50044
G | REVISED PER E.O. S50073
H | REVISED PER E.O. S50060
J | REVISED PER E.O. S50075B
TRANSFORMER 320085
CR6 MR750
CR5 MR750
CR3 MR750
CR1 MR750
CR2 MR750
CR4 MR750
C6 20,000uf 15V DC
C1 4700uf 25V DC
Q2 2N2905A
Q1 2N2905A
Q4 2N5881
Q3 2N3055
R13 12Ω 1/2 W
R4 18Ω 1/2 W
R15 10Ω
R16 2.0K
R11 100
R12 1KΩ
R10 1.5K
R9 4.1K
R14 2.0K
R2 100
R3 1KΩ
R1 2.0K
R5 2.0K
R6 20Ω 1/4 W
R7 3.9K
R8 6.2K
VR1 1K POT
VR2 1K POT
+5VOLT ADJUST
+12VOLT ADJUST
U2 MC1723CP
U1 MC1723CP
C7 .1
C8 .001
C9 47uf 16V
C10 .1
C2 .1
C3 .001
C4 .1
C5 47uf 16V
+5VOLT
+12 VOLT
T.P. +5V
T.P. G1
T.P. +12V
T.P. G2
P4 +5V 5V GND
P3 +12V +12V GND +5V +5V GND
P2 +12V 12V GND 5V GND +5V
△ SEE FOLD BACK CIRCUIT
NOTE: ACROSS R3 AND R12 WHEN THEY ARE 1KΩ SELECT IN TEST. RESISTOR PLACED IN PARALLEL.
NOTES: UNLESS OTHERWISE SPECIFIED
SIGNATURES
DR RICHMAR 9-81
www.commodore.ca
TITLE
PCB SCHEMATIC
POWER SUPPLY WINCHESTER CONTROLLER
SIZE D
DWG NO. 300015-001
SCALE NONE
NEXT ASSY
FIRST USE
APPLICATION

ADDENDUM TO DRAWING NUMBER 300015-001, FOLD BACK CIRCUIT

Values for earlier revisions up to and including Revision G are:

△R12 = 390Ω
△R3 = 75Ω
△R13 = 12Ω

Value for earlier revisions up to and including Revision H:

△R4 = 3.9Ω

Changes are not mandatory.

This information is provided for reference only.

www.commodore.ca

REVISIONS					
REV	DESCRIPTION	DATE	DR	CHK	APPR
B	RELEASE TO PROD PER E.O. #530214	[illegible]	[illegible]		[illegible]
C	REVISED PER E.O. 530249	[illegible]	[illegible]		[illegible]
D	REVISED PER E.O. 550000	[illegible]	[illegible]		[illegible]
E	REVISED PER E.O. 550012	[illegible]	[illegible]		[illegible]
F	REVISED PER E.O. 550044	[illegible]	[illegible]		[illegible]

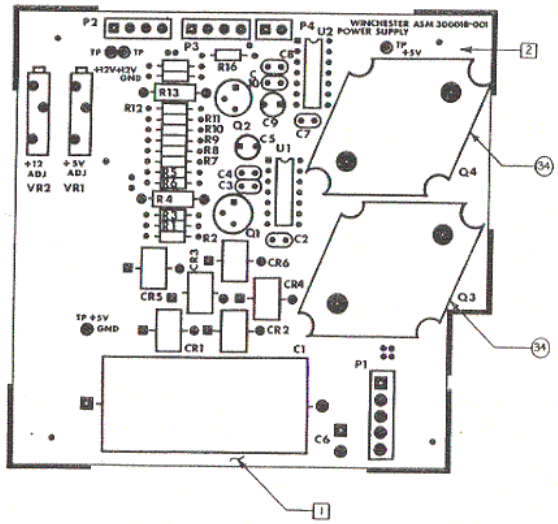

NOTES: UNLESS OTHERWISE SPECIFIED

NEXT ASSY	FIRST USE
APPLICATION	

SIGNATURES	DATE
DR RICHMAR	[illegible]
CHK	
DES	
ENGR	
PROD. ENGR	
MATL	

www.commodore.ca

TITLE
PCB ASSEMBLY
POWER SUPPLY
WINCHESTER CONTROLLER

SIZE	CODE IDENT NO.	DWG NO.	REV
D		300018-001	F
SCALE 2/1		DO NOT SCALE DWG	SHEET 7 OF 7