SIEMENS

3072

RDJ10RF

RCR10/433

Wireless room temperature controller with 24-hour time switch and large LCD

RDJ10RF/SET

Programmable, for heating systems

- **Operating modes: Automatic, Comfort, Energy Saving, and Frost Protection**
- **Large LCD**
- **Battery-powered: 2 x alkaline type AA batteries, 1.5 V**
- **RCR10/433 receiver**

Use

The RDJ10RF is used to control the room temperature in heating or cooling systems.

Typical applications:

- Homes
- Residential buildings
- Schools
- Offices

The controller is used together with the following equipment:

- Thermal valves or zone valves
- Combi boilers
- Gas or oil burners
- Fans
- Pumps

Functions

The controller acquires the room temperature with its integrated sensor.

Function diagram

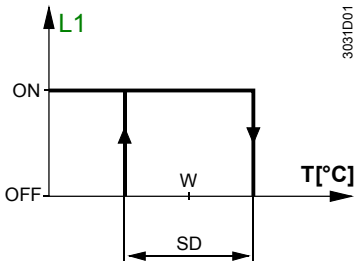

T	Room temperature
SD	Switching differential
W	Room temperature setpoint
L1	Output signal for heating

Temperature sensor

The RDJ10RF provides room temperature control only.

Operating modes

The RDJ10RF provides the following modes: Automatic, Comfort, Energy Saving, and Frost Protection.

The changeover between the operating modes is made by moving the operating mode slider to the respective position.

Automatic mode

When Automatic mode is active, symbol appears on the display.
The RDJ10RF operates according to the selected 24-hour time program.

Comfort mode

When Comfort mode is active, symbol appears on the display.
The RDJ10RF controls to the temperature setpoint adjusted at .
This setpoint can be readjusted by setting the programming slider to .

Energy Saving mode

When Energy Saving mode is active, symbol appears on the display.
The RDJ10RF controls to the temperature setpoint adjusted at .
This setpoint can be readjusted by setting the programming slider to .

Frost Protection

When Frost Protection is active, symbol appears on the display.
The RDJ10RF controls to the fixed temperature setpoint for frost protection.

Display

The digital display shows the actual room temperature and the comfort temperature setpoint. When the heating output is active, the triangle symbol appears.

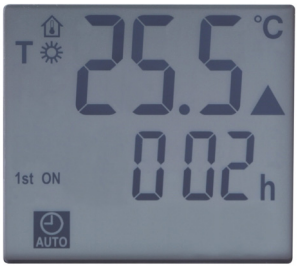

Backup

When taking out the batteries, the setpoints and the information required for operating mode changeover are retained for max. 2 minutes.

Ordering

When ordering, please give name and product number: Room temperature controller RDJ10RF/SET.
Valves and actuators are to be ordered as separate items.

Equipment combinations

Type of unit	Product number	Data sheet
Electromotoric actuator	**SFA21...**	4863
Electrothermal actuator (for radiator valves)	**STA21...**	4877
Electrothermal actuator (for small valves 2.5 mm)	**STP21...**	4878
2- or 3-port zone valve	**MXI/MVI421…**	4867
Electromotoric actuator for zone valves V..146..	**SUA21**	4830
Electric actuator	**SUA11/22**	4832
Air damper actuator	**GDB…**	4624
Air damper actuator	**GSD/GQD…**	4606
Air damper actuator	**GXD…**	4622

The unit consists of 4 parts:

- Plastic housing with digital display accommodating the electronics, operating elements and built-in room temperatures sensor
- Baseplate (mounting base)
- Removable battery compartment
- Fold-out stand

The housing engages in the baseplate and snaps on. There is a reset button on the rear of the unit.

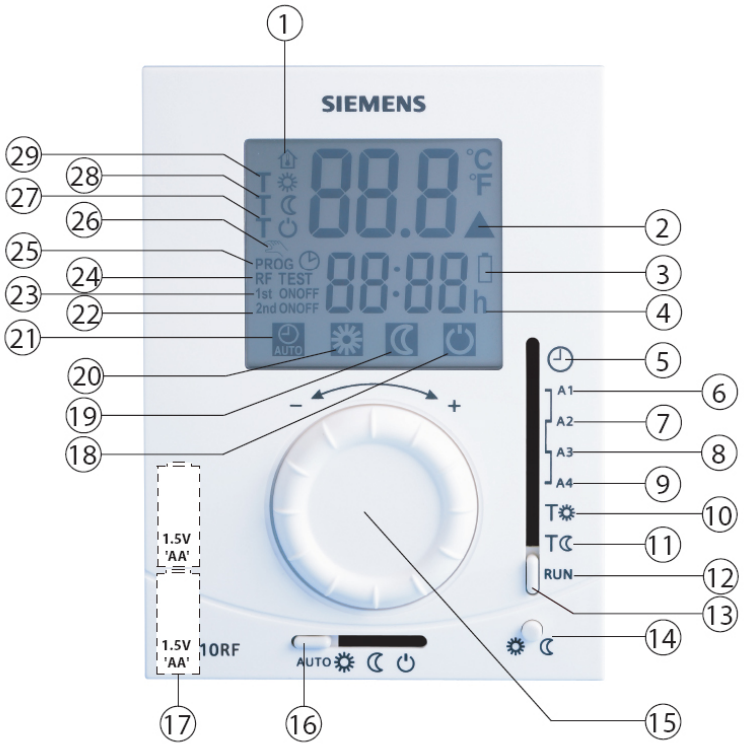

Key

1 Display of the room temperature in °C
2 ▲ Indicates a request for heat
3 Indicates low battery power; replace batteries
4 Time of day (00:00…23:59 format)
5 Time setting position
6 First switch ON time
7 First switch OFF time
8 Second switch ON time
9 Second switch OFF time
10 Comfort temperature setting
11 Energy saving temperature setting
12 RUN position
13 Programming slider
14 Advance button (override / presence button)
15 Temperature setting knob
16 Operating mode slider
17 Battery compartment
18 Frost Protection; the RDJ10RF controls to the fixed temperature setpoint for frost protection
19 Energy Saving mode; the RDJ10RF controls continuously to the energy saving temperature setpoint

20 Comfort mode; the RDJ10RF controls continuously to the comfort temperature setpoint
21 Automatic mode; the RDJ10RF operates according to the selected time and temperature program
22 Indicates second switch ON / OFF time
23 Indicates first switch ON / OFF time
24 RF
TEST Indicates RF signal test
25 Indicates that programming is taking place.
26 Setpoint is overridden temporarily until the next switching time
27 The RDJ10RF controls to the fixed frost protection temperature setpoint
28 The RDJ10RF controls to the adjusted energy saving temperature setpoint
29 The RDJ10RF controls to the adjusted comfort temperature setpoint

Mechanical design

The RCR10/433 receiver is located in a plastic housing with LEDs and buttons.

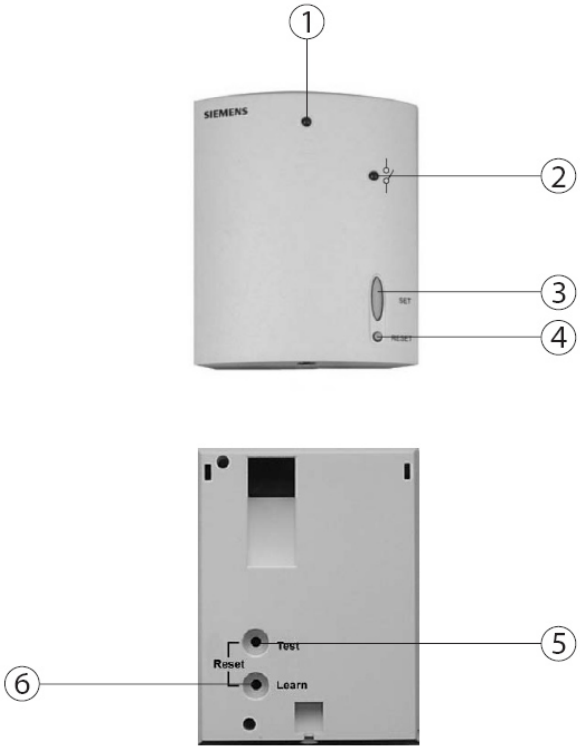

Key

1 LED signal indicator
2 LED relay indicator
3 SET button
4 RESET button
5 Test button
6 Learn button

Mount the room temperature controller in a location where the air temperature can be acquired as accurately as possible without getting adversely affected by direct solar radiation or other heat or refrigeration sources.

The controller can also be used in a portable manner. It features a fold-out stand allowing it to be placed on a horizontal surface such as a bedside table.

Mounting height is about 1.5 m above the floor.

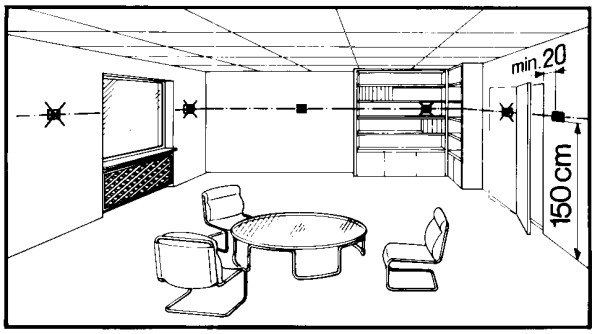

The unit can be fitted to a recessed conduit box.

Mounting, installation and commissioning

When mounting the controller, fix the baseplate first. The receiver does not require any baseplate. Make the electrical connections and fit and secure the receiver (also refer to the separate mounting instructions).
Mount the controller on a flat wall and in compliance with local regulations.
If there are thermostatic radiator valves in the reference room, set them to their fully open position.

Maintenance

Controller and receiver are maintenance-free.

Change of batteries

If the battery symbol appears, the batteries are almost exhausted and must be replaced.

Reset

To reset the controller, press both the Test and Learn buttons on the rear of the unit.
To reset the receiver, press the RESET button on the unit front.
All individual settings are then reset to their default values.

Technical data

Power supply	Operating voltage	DC 3 V (2 x 1.5 V AA alkaline batteries)
	Battery life	>1 year (AA alkaline batteries)
Sensor inputs	**Internal:**	
	Thermistor	10 kΩ ± 1% at 25 °C
Operational data	Switching differential SD	1 K
	Setpoint setting range	5…30 °C (Comfort mode)
		5…30 °C (Energy Saving mode)
		5 °C (Frost Protection, fixed value)
	Factory setting comfort setpoint	20 °C
	Factory setting for energy saving mode	10 °C
	Resolution of settings and displays	
	Setpoints	0.5 °C
	Actual value displays	0.5 °C
	Display of time of day	1 min
Environmental conditions	Operation	IEC 721-3-3
	Climatic conditions	Class 3K5
	Temperature	0…+40 °C
	Humidity	<90% r.h.
	Transport	IEC 721-3-2
	Climatic conditions	Class 2K3
	Temperature	-25…+60 °C
	Humidity	<95 % r. h.
	Mechanical conditions	Class 2M2
	Storage	IEC 721-3-1
	Climatic conditions	Class 1K3
	Temperature	-10…+60 °C
	Humidity	<90% r.h.
Standards	CE conformity to	
	EMC directive	2004/108/EC
	Low-voltage directive	2006/95/EC
	Radio equipment	1999/5/EC
	C-tick conformity to	
	Test standards and requirements	EN 61000-6-3, AS/NZS 4251.1: 1999
	Test standards for radio equipment	AS/NZS 4268: 2003
	Product safety	
	Automatic electrical controls for household and similar use	EN 60 730-1 and EN 60 730-2-9
	Information technology equipment - Safety - General Requirements	EN 60950-1
	Generic standards - Compliance to lower power electronic apparatus	EN 50371-1
	Electromagnetic compatibility and radio spectrum matters–Short range devices	EN 300220-3 V1.1.1
	Electromagnetic compatibility and radio spectrum matters – EMC	EN 301489-3 V1.4.1
	Safety class	III as per EN 60950-1
	Pollution degree	2
	Degree of protection of housing	IP20
General	Weight (including package)	
	RDJ10RF/SET	515 g
	Color of housing front	Signal-white RAL9003
	Housing material	ABS (LCD lens: PC)

General unit data	Operating voltage	AC 230 V +10/−15%
	Power	<10 VA
	Frequency	50...60 Hz
	Switching capacity of relays	
	Voltage	AC 24...250 V
	Current	8 (3) A
Outputs	Relay contacts	
⚠ Switching outputs (LX, L1, L2)	Switching voltage	Max. AC 250 V Min. AC 24 V
	Switching current	Max. 8 A res., 3 A ind.
	At 250 V	Min. 200 mA
	Contact life at AC 250 V	Guide value:
	At 5 A res.	1 x 10^5 cycles
	Insulating strength	
	Between relay contacts and coil	AC 5,000 V
	Between relay contacts (same pole)	AC 2,500 V
Electrical connections	Connection terminals	Screw terminals
	For solid wires	2 x 1.5 mm^2
	For stranded wires	1 x 2.5 mm^2 (min. 0.5 mm^2)
Environmental conditions	Operation	IEC 60 721-3
	Climatic conditions	Class 3K3
	Temperature	0...+45 °C
	Humidity	<85% r.h.
	Storage and transport	IEC 60 721-3
	Climatic conditions	Class 2K3
	Temperature	−25...+70 °C
	Humidity	<93% r.h.
	Mechanical conditions	Class 2M2
Standards	CE conformity	
	EMC directives	2004/108/EC
	Low-voltage directives	2006/95/EC
	Radio equipment	1999/5/EC
	Product safety	
	Automatic electrical controls for household and similar use	EN 60 730-1 and EN 60 730-2-9
	Information technology equipment - Safety - General Requirements	EN 60950-1
	Generic standards - Compliance to lower power electronic apparatus	EN 50371-1
	Electromagnetic compatibility and radio spectrum matters–Short range devices	EN 300220-3 V1.1.1
	Electromagnetic compatibility and radio spectrum matters – EMC	EN 301489-3 V1.4.1
	CE approval in the following countries	All ECC countries, Norway, Iceland and Switzerland
	Safety class	II as per EN 60 730
	Degree of pollution	2
Color	Unit front	Signal-white RAL 9003
	Base	Gray RAL 7035
	Dimensions	83x104x32 mm

Connection diagram

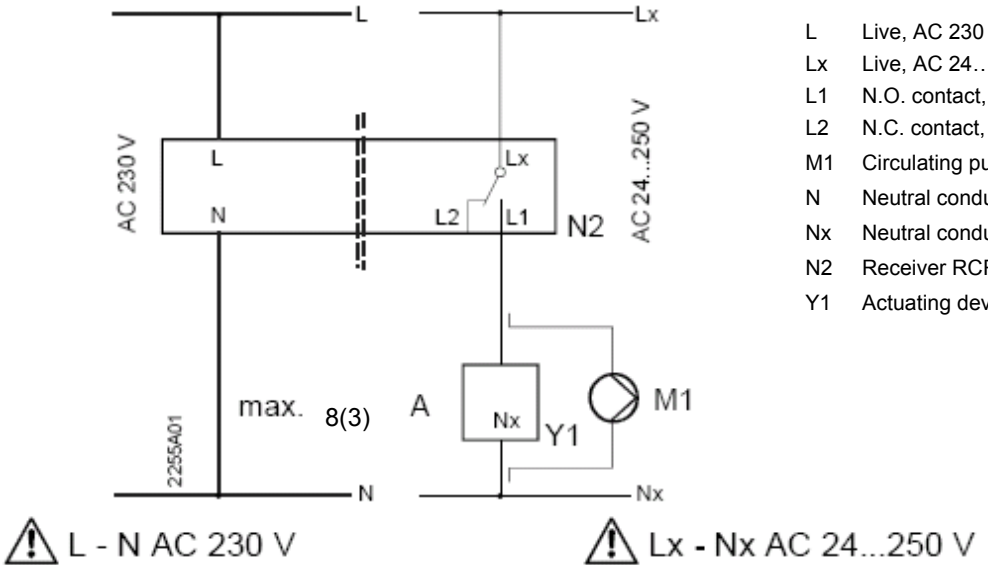

L	Live, AC 230 V
Lx	Live, AC 24…250 V
L1	N.O. contact, AC 24…250 V / 8 (3) A
L2	N.C. contact, AC 24…250 V / 8 (3) A
M1	Circulating pump
N	Neutral conductor
Nx	Neutral conductor
N2	Receiver RCR10/433
Y1	Actuating device

Application examples

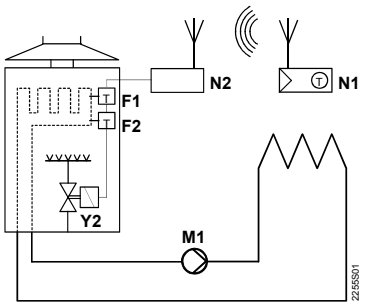

Wireless room temperature controller with receiver control of a gas-fired wall-hung boiler

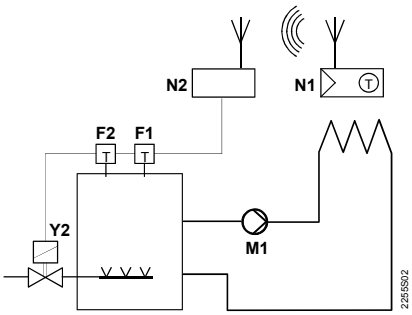

Wireless room temperature controller with receiver control of atmospheric gas burner

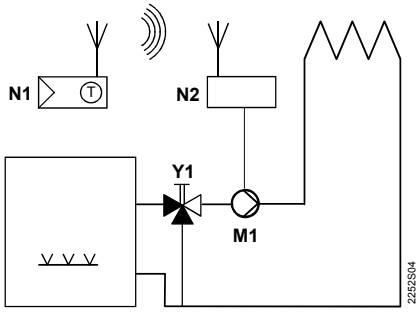

Wireless room temperature controller with receiver control of a heating circuit pump (precontrol by manual mixing valve)

F1	Thermal reset limit thermostat	N1	Room temperature controller RDJ10RF
F2	Safety limit thermostat	N2	Receiver RCR10/433
M1	Circulating pump	Y1	3-port valve with manual adjustment
		Y2	Magnetic valve

Dimensions

Room temperature controller

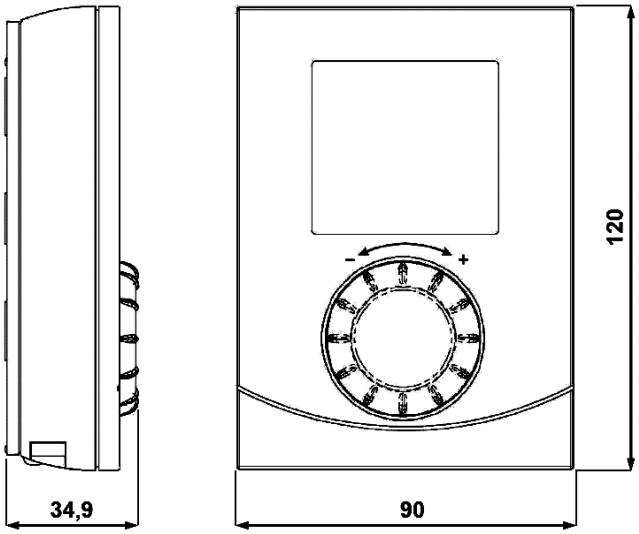

Baseplate

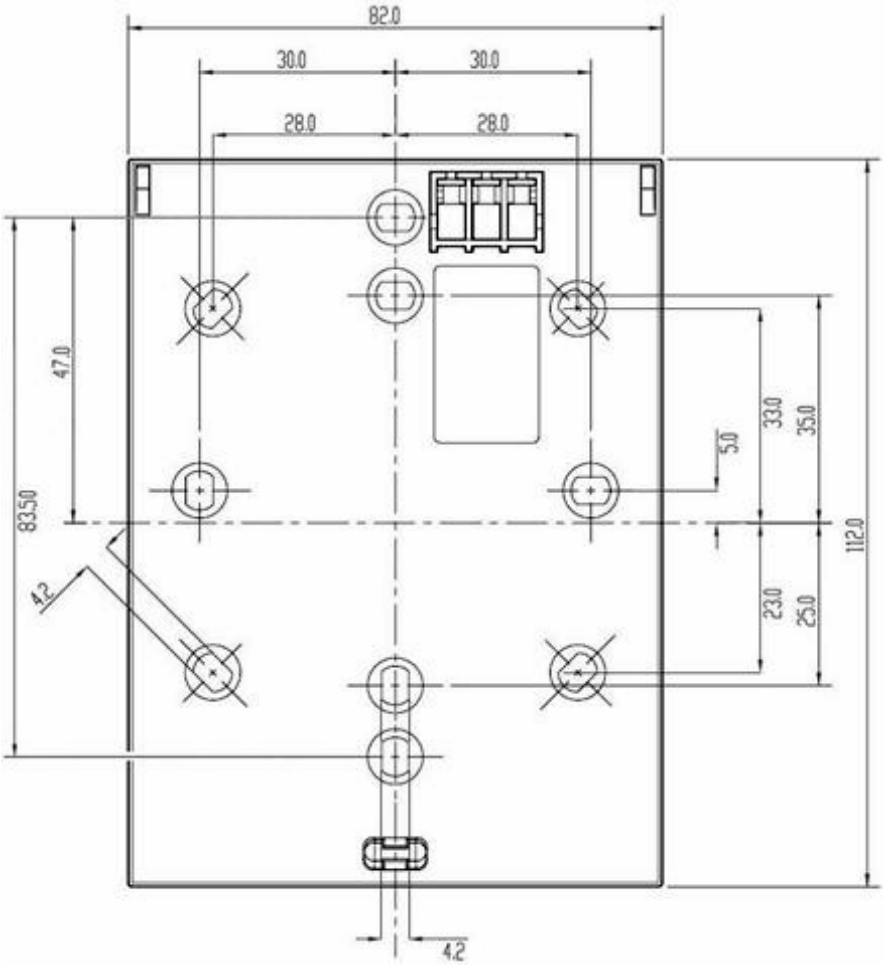

With fold-out stand

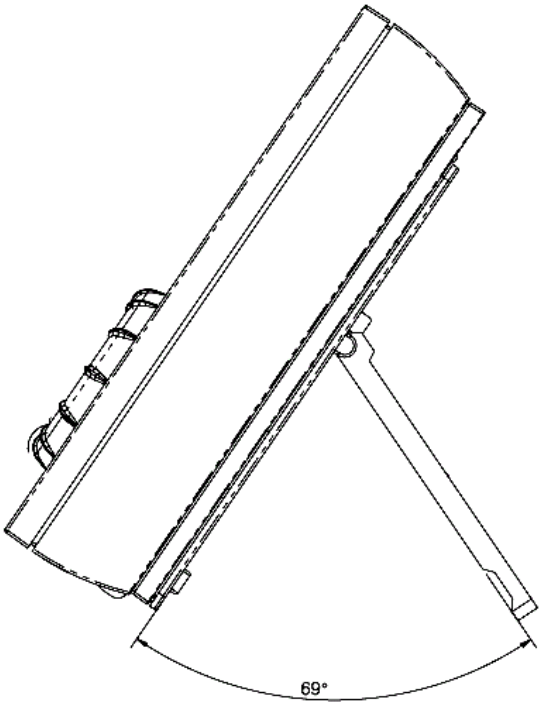

Receiver