Hindawi
Wireless Communications and Mobile Computing
Volume 2022, Article ID 1621445, 14 pages
https://doi.org/10.1155/2022/1621445

Research Article

Coordinated Optimization Control System of Big Data Intelligent Production Line

Shi He,[1] Guohua Cao,[1,2] Guoqing Ma,[1,3] Jingsong Duan,[1] and Jimeng Bai[1]

[1]*College of Mechanical and Electrical Engineering, Changchun University of Science and Technology, Changchun City, 130022 Jilin Province, China*
[2]*Chongqing Research Institute of Changchun University of Science and Technology, Chongqing City, 401135, China*
[3]*Wuhu HIT Robot Technology Research Institute Co., Ltd., Wuhu City, 241000 Anhui Province, China*

Correspondence should be addressed to Guohua Cao; caogh@cust.edu.cn

Received 19 February 2022; Revised 24 March 2022; Accepted 20 April 2022; Published 13 May 2022

Academic Editor: Junjuan Xia

A mature coordinated and optimized control system can bring timeliness and benefits to the production line. This paper firstly exemplifies the big data intelligent production line coordination control system model and algorithm. They, respectively, include the intelligent production line coordination control system model, the big data intelligent coordination control model, and the hardware key electrical control system model of the air conditioning assembly big data intelligent production line, taking the tea production line as an example. The parameters of the coordinated control model are identified by the algorithm and system design, which considers and adjusts the functional requirements of the system to maintain the stable operation of the software system and store and transmit efficiently. To achieve efficient fit between functional requirements and modules, it created a complete assembly automation production line that meets actual needs. Then, the experiment of big data intelligent coordination and optimization control system based on cement clinker production line is carried out, and the intelligent coordination control system of cement clinker is designed. Compared with the data, it can be seen that in the coordinated control mode, the fluctuation of the temperature and pressure of the main steam is smaller, which can make the entire power generation system operate safely and stably. Based on the fuzzy control of the waste heat boiler and steam turbine load coordination control requirements, the reasonable coordination control of the boiler system and the generator set is carried out through fuzzy control, and the optimization and adjustment are carried out. Finally, the comparison and analysis of fuzzy control and traditional control experiments are carried out, and a coordinated optimization system using fuzzy control is obtained. It requires less feeding material, consumes less energy in the production process, generates more power, and can increase the average income by 4.87%, which has a good practical application prospect.

1. Introduction

The intelligent production line under big data is composed of many complex components, generally including the control system, related process equipment, auxiliary equipment, and transmission system. The control methods of the control system include the feedback control method, open-loop control method, and open-loop control system controlled by a given amount. However, according to the actual needs of various types of production, the specific structure of the intelligent production line will have different changes. If it is classified according to the structure, it can generally be divided into automatic lines for special equipment, automatic lines for general equipment, and automatic lines with or without storage. With the rapid development of modern science and technology, the control technology in the production process has also been significantly improved. At present, in the production process of most enterprises, the distributed control system is generally used. The distributed control system is a new generation of instrument control

system based on the microprocessor, which adopts the design principles of decentralized control functions and centralized display operation, taking into account the separation and autonomy and comprehensive coordination. And then, the system has high requirements for the operator's technology and professionalism and relies on manual operation and processing, so the use of this system requires a large amount of work learning cost. In order to meet the increasing production demand, the existing control technology must be further optimized, so that the production efficiency of the entire production process can be significantly improved. Therefore, it is very necessary to conduct in-depth research on control technology, and the research results will provide great help and economic support for real production.

The innovation of this experiment is to use fuzzy control to design and optimize the coordination and optimization system of the intelligent production line to achieve a stable state, improve economic benefits, and control accuracy, which can be better applied in real life. The significance of this paper is to make the intelligent production line have better operation effect and precision control, stronger development adaptability, and higher practical significance.

2. Related Work

Yan et al. propose an optimized and coordinated model predictive control (MPC) scheme for a doubly fed induction generator (DFIG) with a DC-based converter system to improve the efficiency and dynamic performance of a DC grid. In this configuration, the stator and rotor of the DFIG are connected to the DC bus through voltage source converters, namely, the rotor-side converter (RSC) and the stator-side converter (SSC) [1]. Li et al. propose an optimal coordination method for electric vehicles (EVs) participating in frequency regulation (FR) under different power system operating states (PSOS). In the proposed method, the FR power of electric vehicles and generators is coordinated with different optimization objectives for a safe and economical operation of the power system [2]. Zhu et al. said that the efficient use of big data can improve the intelligence and automation of the manufacturing process, provide high-quality products and just-in-time production, increase productivity, and reduce costs. For example, by analyzing factory floor data, equipment monitoring data, and enterprise manufacturing databases, it can help store, explore, and make complex decisions about manufacturing systems [3]. Lade et al. believe that a smart production cell can be viewed as a large interconnected industrial system of materials, parts, machines, tools, inventory, and logistics that can relay data and communicate with each other. While the traditional focus has been on machine health and predictive maintenance, manufacturing has also begun to focus on analyzing data from the entire production line [4]. Liu et al. proposed the Mamdami fuzzy control logic to overcome the motion control of the multi-DOF TWIP robot and make its motion controlled smoothly. By introducing two additional degrees of freedom slider and swing configurations, the robot can maintain its vertical posture even when climbing and descending on slopes [5]. Xu et al. synthesized an adaptive fuzzy controller with a novel update law based on disturbance estimation and fuzzy approximation. The stability analysis of the closed-loop system is strictly established by the Lyapunov method. It verifies the performance of the proposed controller by simulation, obtaining faster convergence speed and higher accuracy [6]. However, these studies all have the problems of insufficient demonstration or unclear goals, which need to be further improved.

3. Big Data Intelligent Production Line Coordination Control System Model and Algorithm

3.1. An Intelligent Production Line Coordination Control System Model with a Tea Production Line as an Example. Before designing and developing the entire remote monitoring and control system, it is first necessary to clarify the user's requirements for the system and related functions [7]. In the process of tea production, users need to be able to monitor and control the real-time situation of the entire tea production line anytime, anywhere, so it is necessary to arrange relevant data sensors and remote communication devices on the tea production line [8]. In addition to viewing the situation through equipment in the plant, remote needs outside the plant also need to be met, so it is necessary to develop a client that can run on the Android system and can be used on mobile phones and tablets at the same time [9]. Among them, the two parts of the remote server and the remote database constitute the server unit, and the entire remote monitoring and control system is mainly composed of PLC, display screen, sensors, etc. After the PLC is put into operation, its working process is generally divided into three stages, namely, input sampling, user program execution, and output refresh. Completing the above three stages is called a scan cycle. During the whole operation period, the CPU of the programmable logic controller repeatedly executes the above three stages at a certain scanning speed. Its structure is shown in Figure 1.

According to the different usage environments of users, the following suggestions are put forward: In the case of maintaining the stable operation of the system, it is also necessary to ensure the safe operation of the production equipment in the factory building. Therefore, according to different user usage scenarios, different kinds of operation permissions are hereby assigned. It divides the system login mode into two types according to the user's use environment: one is the onsite mode, and the other is the remote mode. The advantage of this design is that when there are multiple users using the system at the same time, the priority operation authority of the system will be assigned to the user in live mode. At the same time, users in onsite mode have greater system authority to ensure the safety of onsite operations and avoid the risks brought by remote operations [10]. When the user is on site, he has better control over the entire production line, and remote operation has certain unknown risks. Therefore, the reasonable allocation of permissions is particularly important. Permission allocation under multiple users is shown in Figure 2.

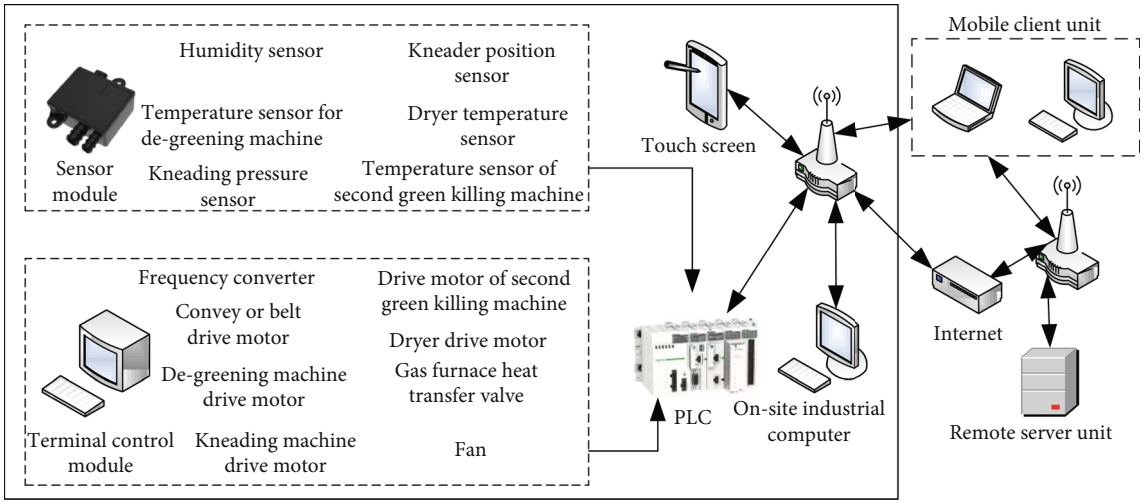

Figure 1: Frame design of the production line intelligent system.

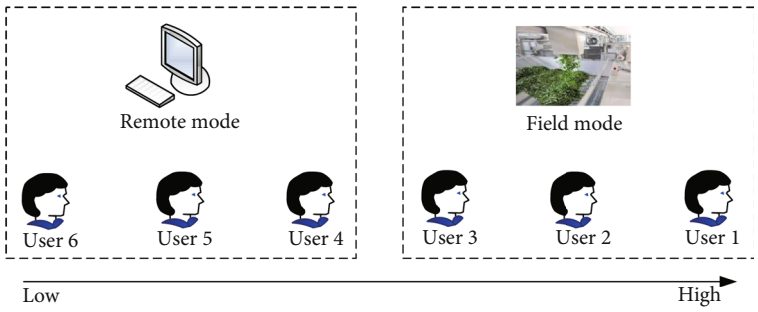

Figure 2: Priority design.

In the intelligent measurement and control system of the tea production line, the software system not only provides convenience and security to the production line but also the actual embodiment of the intelligent measurement and control system. The existence of the software system highlights the characteristics of its intelligence and informatization [11]. By using the relevant functions of the software system, users can timely and efficiently solve various difficult and miscellaneous diseases encountered in the tea production process. The software system not only reduces manpower expenditure but also significantly improves the work efficiency of the entire production line. At the same time, the software system can realize the monitoring, analysis, and transmission of data. For users, the software system can display data concisely and intuitively, store various data safely and stably, and quickly communicate and execute instructions issued by users [12]. In the Android-based intelligent measurement and control system, its software system is mainly composed of touch screen application, PLC, client program, remote server program, and onsite industrial computer-related programs, as shown in Figure 3.

In this intelligent measurement and control system, the most important and basic point is to maintain the stable operation of the software system, the various interfaces of the software system should be user-friendly, and the various data can be stored and transmitted stably and efficiently [13].

3.2. Big Data Intelligent Coordination Control Model. When designing and developing intelligent systems, since human subjective consciousness should be taken into consideration, the existing large-scale system profits cannot be fully applied [14]. The lack of relevant information will also have many adverse effects, so the existing reasonable method is based on the level of actual smart home coordination control. When establishing the overall model, it firstly studies and perfects each of the subsystems, so that the structure level of the entire system is clearer [15].

Let $A_i(s)$ and $B_i(s)$ be used as the state vector of the ith subsystem at time s in v_i-dimension and the control vector in u_i-dimension, respectively; at this time $i = 1, 2, \cdots, U$, we can get

$$A_i^N(s) = \left(a_{i1}(s), a_{i1}(s), \cdots, a_{iv_i}(s)\right), \tag{1}$$

$$B_i^N(s) = \left(b_{i1}(s), b_{i1}(s), \cdots, b_{iu_i}(s)\right). \tag{2}$$

The ith subsystem structure formula in this state can be calculated as follows:

$$A_i(s+1) = X_i(s)A_i(s) + Y_i(s)B_i(s) + Z_i(s)C_i(s) + W_i(s). \tag{3}$$

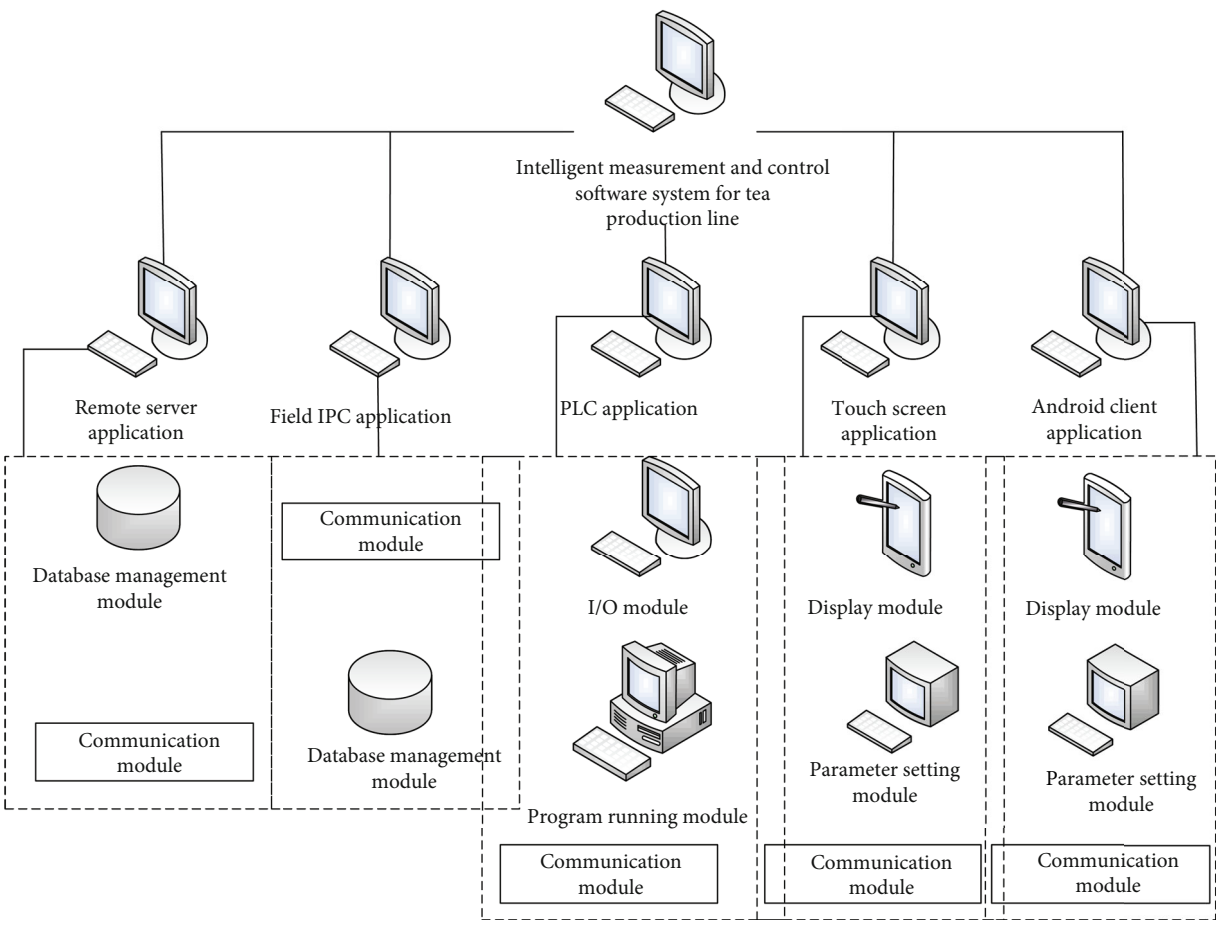

Figure 3: Overall structure of the software system.

The $C_i(s)$ in this formula is a h_i-dimensional associative vector; $X_i(s)$, $Y_i(s)$, and $Z_i(s)$ are used as time-varying system matrices for the corresponding time period; $W_i(s)$ is the random noise at this time; and E_{ik}, F_{ik} is set as a constant matrix; we can get

$$C_i(s+1) = \sum_{i}^{U}\{E_{ik}B_k(s) + F_{ik}A_k(s)\}, i = 1, 2, \cdots, U. \quad (4)$$

Let $D_i(s)$ be the p_i-dimensional output vector of the ith subsystem at time $2s$, then

$$D_i^N(s) = \left(d_{i1}(s), d_{i2}(s), \cdots, d_{ip_i}(s)\right), \quad (5)$$

$$D_i(s) = Q_i(s)A_i(s) + M_i(s), i = 1, 2, \cdots, U, \quad (6)$$

where $Q_i(s)$ is the time-varying parameter matrix and $M_i(s)$ is random noise. The complete model structure of the entire big data system can be expressed as follows:

$$A(s+1) = X(s)A(s) + Y(s)B(s) + Z(s) + C(s) + W(s), \quad (7)$$

$$D(s) = Q(s)A(s) + M(s), \quad (8)$$

$$A^N(s) = \left(A_1^N(s), A_2^N(s), \cdots, A_U^N(s)\right), \quad (9)$$

$$B^N(s) = \left(B_1^N(s), B_2^N(s), \cdots, B_U^N(s)\right), \quad (10)$$

$$D^N(s) = \left(D_1^N(s), D_2^N(s), \cdots, D_U^N(s)\right). \quad (11)$$

The dimensional state vector of this big data intelligent system v can be written as $v = \sum_{i=1}^{N} v_i$, u-dimensional control vector, u-dimensional state vector can be written as $u = \sum_{i=1}^{N} u_i$, and p-dimensional state vector can be written as $p = \sum_{i=1}^{N} p_i$; at this time, we can get

$$A_i(s+1) = X_i(s)A_i(s) + Y_i(s)B_i(s) + Z_i(s) \cdot \left[\sum_{k=1}^{N} E_{ik}B_i(s) + E_{ik}A_i(s)\right] + W_i(s), \quad (12)$$

$$A_i(s+1) = X_i(s)A_i(s) + Z_i(s)\sum_{k=1}^{N} E_{ik}A_i(s) + Y_i(s)B_i(s) + Z_i(s)\sum_{k=1}^{N} E_{ik}B_i(s) + W_i(s). \quad (13)$$

If order

$$\phi^N(s) = \left\{A_1^N(s), A_2^N(s), \cdots, A_U^N(s), B_1^N(s), B_2^N(s), \cdots, B_U^N(s)\right\}, \tag{14}$$

$$\lambda_i(s) = \left\{\begin{array}{c} Z_i(s)F_x, Z_i(s)F_{i2}, \cdots, Z_i(s)F_{ii} + X_i(s), \cdots Z_i(s)F_{iU}, Z_i(s)F_x, \\ Z_i(s)F_{i2}, \cdots, Z_i(s)F_{ii} + Y_i(s), \cdots Z_i(s)F_{iU} \end{array}\right\}, i = 1, 2, \cdots, U, \tag{15}$$

then it can get

$$A_i(s+1) = \lambda_i(s)\phi(s) + W_i(s), i = 1, 2, \cdots, U. \tag{16}$$

At this point, $\lambda_i(s)$ can be described as a vector:

$$\lambda_i(s) = \left\{\varepsilon_{i1}^N(s), \varepsilon_{i2}^N(s)\varepsilon_{iv_i}^N(s)\right\}, i = 1, 2, \cdots, U. \tag{17}$$

For each state component a_{ik} in the ith subsystem:

$$a_{ik}(s+1) = \phi^N(s)\varepsilon_{ik}(s) + w_{ik}(s)\,; i = 1, 2, \cdots, U\,; k = 1, 2, \cdots, v. \tag{18}$$

If the parameters of the coordinated control model are identified, the parameters need to be predicted. Using the parameter estimation to generalize the gradient recursion algorithm, we can obtain

$$\begin{aligned}\widehat{\varepsilon}_{ik}(s) = \widehat{\varepsilon}_{ik}(s-1) + \left(\frac{1}{\|\phi(s)\|^2}\right)\phi(s) \\ \cdot \left\{a_{ik}(s+1) - \phi^N(s)\widehat{\varepsilon}_{ik}(s-1)\right\}.\end{aligned} \tag{19}$$

$\widehat{\varepsilon}_{ik}(s)$ is the parameter estimate. A sequence of parameter estimates is

$$\{\widehat{\varepsilon}_{ik}(1), \widehat{\varepsilon}_{ik}(2), \widehat{\varepsilon}_{ik}(V)\}\,; i = 1, 2, \cdots, U\,; k = 1, 2, \cdots, v. \tag{20}$$

The parameter prediction value can be obtained by using the corresponding algorithm to predict the unknown time-varying parameter:

$$\widehat{\varepsilon}_{ik}^*(V+1), \widehat{\varepsilon}_{ik}^*(V+2), \cdots, \widehat{\varepsilon}_{ik}^*(V+l)\,; i = 1, 2, \cdots, U\,; k = 1, 2, \cdots, v_i. \tag{21}$$

The l unknown in equation (21) represents the prediction step size. After the model is simplified, we set the control amount at the future time to $G(s)$; then, the adaptive prediction of the system state can continue, and the adaptive predictor can choose MATLAB:

$$\widehat{a}_{ik}(s+1) = \phi^N(s)\widehat{\varepsilon}_{ik}^*(s). \tag{22}$$

In the multistep forward prediction, when the time value is too large, the following can be derived:

$$\phi^N(s) = \left[A^N(s), B^N(s)\right], \tag{23}$$

$$\varepsilon_{ik}^N(s) = \left[x_{ik}^N(s), y_{ik}^N(s)\right]. \tag{24}$$

For the components of a given state, it is combined with the adaptive control algorithm. The types of adaptive control algorithms include the nonblind algorithm, blind algorithm, and semi-nonblind algorithm. We can get

$$\begin{aligned}B^{(ik)}(s) = B^{(ik)}(s) + \frac{\widehat{y}_{ik}^*(s)}{\|\widehat{y}_{ik}^*(s)\|^2} \\ \cdot \left\{\widehat{a}_{ik}^*(s+1) - \widehat{x}_{ik}^N(s)a(s) - \widehat{y}_{ik}^N(s)B^{(ik)}(s-1)\right.\end{aligned} \tag{25}$$

The corresponding value can be obtained using the adaptive control algorithm.

3.3. The Key Electrical Control System Model of the Hardware of the Air Conditioning Assembly Big Data Intelligent Production Line. The size of the PLC scale is mainly affected by the number of input points and output points. At the same time, the scale of PLC also needs to be adjusted according to actual needs for later expansion. Before starting the design of the system, it is necessary to determine the number of I/O points required, and at this time, it is necessary to consider the functional requirements of the system. And it also needs to take into account factors such as various unexpected situations after the system is completed and related equipment [16]. Therefore, in the early stage of system design, it is necessary for the system to have a certain excess space that can be reserved for later maintenance, upgrade, and expansion. The design margin of this space is at least 20.31%. According to the internal space of the control cabinet and the size of related components, the overall space is optimized and reduced as much as possible to ensure the integration of the entire system [17]. It analyzes the power of various electrical equipment to correctly select the appropriate power supply and draws the corresponding electrical schematics accordingly [18]. The function of the power filter is to obtain a power signal of a specific frequency by connecting the power filter to the power line or to eliminate the power signal of a specific frequency. Using this feature of the power filter, a square wave group or complex noise after passing through the power filter can be turned into a sine wave of a specific frequency. The system wiring diagram is drawn according to the final hardware selection [19]. The reasonable allocation of I/O addresses is mainly based on the final selection of input ports and output ports and controllers. This paper mainly describes the related design of the power system and its electrical control system [17]. In a complete automated production line, there are usually

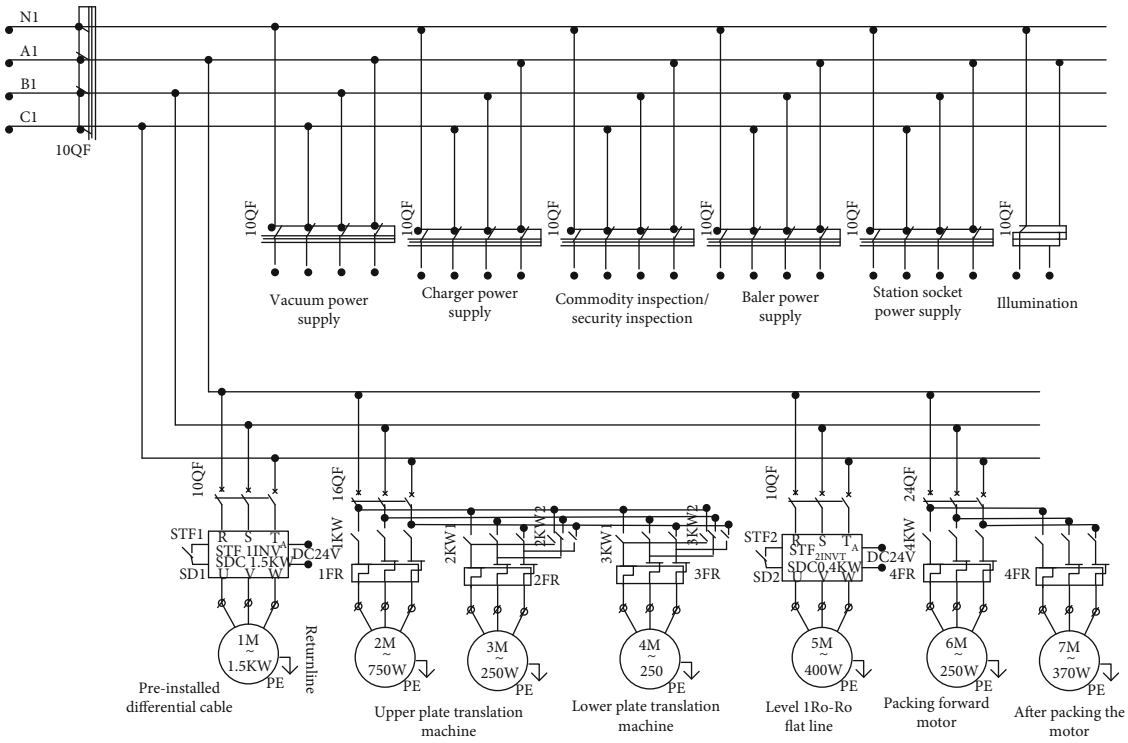

Figure 4: Main circuit power control of air conditioning electrical coordination control system.

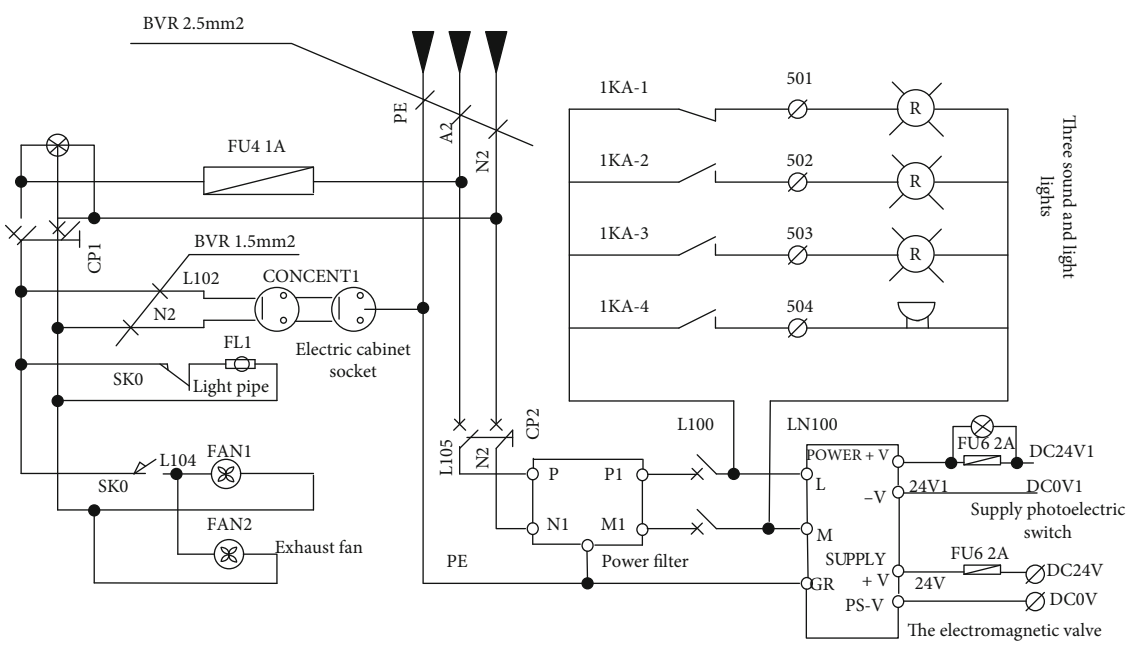

Figure 5: Main power control of air conditioning electrical coordination control system.

dozens of assembly stations, including drive motors, sensors, and automated workstations, and equipment such as low-voltage DC and high-voltage AC are generally designed in the same system. The complete development of the relevant design work of the system is mainly based on the required components and related requirements of the system.

In order to ensure the stable operation of the air conditioning assembly automation, a reasonable electrical diagram of the supply line in the store should be drawn before the development and design, as shown in Figure 4. In this supply line, it mainly supplies power to various motors, while the high-voltage power supply separately sets up dedicated high-voltage power supply sockets for automation equipment and workstations.

The electrical diagram of each electrical appliance in the control cabinet of the system is shown in Figure 5. In order

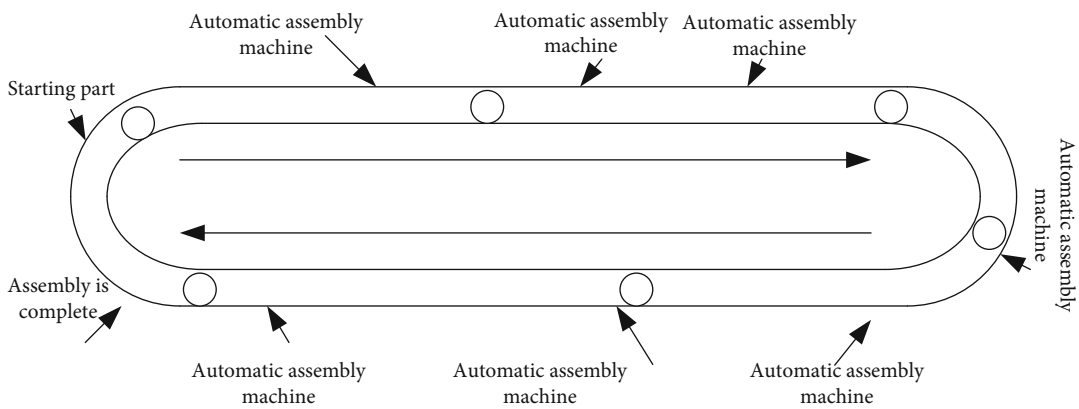

Figure 6: Circular automatic air conditioning assembly line.

to supply power to PLC, sensors, and other electrical appliances that require low-voltage power, the high-voltage power input in the entire system is converted into 24 V DC through the high-voltage conversion function of the switching power supply to ensure the stable operation of low-voltage electrical appliances. At the same time, in order to prevent the noise from adversely interfering with the electrical appliances, a power filter is preset in the bottom line to eliminate all kinds of noise. The function of the power filter is to obtain a power signal of a specific frequency by connecting the power filter to the power line or to eliminate the power signal of a specific frequency. Using this feature of the power filter, a square wave group or complex noise after passing through the power filter can be turned into a sine wave of a specific frequency.

In the working process of the system, the correct connection of the copper pipe joint of the pressure valve is mainly carried out by the positioning device to judge and determine the real-time position of the product. After the system detects the docking state of the joint and confirms that it is correct, the subsequent test procedure will be started. The purpose of this move is to ensure the perfect butt joint of the joint and make the pressure in the copper pipe quickly reach the corresponding pressure standard within the specified time, which is generally $0 \sim 5$ kPa. At the same time, when the whole system stops running, the pressure in the copper pipe is generally $0 \sim 25$ kPa. Through the corresponding sensor device, the system can monitor and collect data on the pressure in the copper pipe in real time. The main sensors in the air conditioning production line are pressure sensors, humidity sensors, temperature sensors, etc. When the product meets the inspection standard, the relevant device will release in real time and send the product to the next process; if the product does not meet the standard, an alarm procedure will be triggered and the product will be tested again. In order to ensure the reliability and safety of the wiring in the entire electrical system, the shielded wire is used as the signal wire for data acquisition, and the shielded wire needs to be separated from other electrical wires to avoid irrelevant interference. Figure 6 shows the layout structure of the annular assembly automated assembly line production line.

The modular design pushes the assembly automation production line to a more efficient and complete level. Under the blessing of modular design, each automatic assembly machine in the production line has the characteristics of interchangeability, so compared with the traditional special machine-specific assembly situation. The method can significantly reduce the related spare parts expenses of the assembling machine and also reduce the maintenance cost of the machine. Automated assembly equipment must be expanded and graded by several service centers. The upper control panel and module are used to operate the control measures of the secondary electronic computer distributed system. The module manipulates the actual operation control panel and checks the alarm system for common faults, making the entire control system more complete. In the development and design of the assembly automation production line, its functional requirements are given priority. The corresponding modules are developed based on functional requirements, which can achieve efficient fit between functional requirements and modules, thereby creating a complete assembly automation production line that meets actual requirements.

4. Experiment of Big Data Intelligent Coordination and Optimization Control System Based on Cement Clinker Production Line

4.1. Cement Clinker Intelligent Coordination Control System. The nonlinearity and complexity of the precalciner, the cyclone preheater, and the SP boiler will be more affected by the addition of the kiln tail waste heat boiler in the kiln tail system, making the overall uncertainty factors more. The cyclone preheater system is a hot air exchange and a dust collector. The material meets the hot air flow in a suspended state and is reheated. After the material is subjected to centrifugal force and collides with the cylinder wall, it enters the next stage preheater by its own weight. Among them, the relevant characteristics of the cyclone preheater are very easily changed by external factors, such as the amount of raw meal, heat dissipation, and raw meal and flue gas composition. And the characteristics of the cyclone preheater change dynamically, so the changes of its characteristics in each link are quite different. Since various factors in the process have high uncertainty and are difficult to express, it is also difficult to establish related mathematical

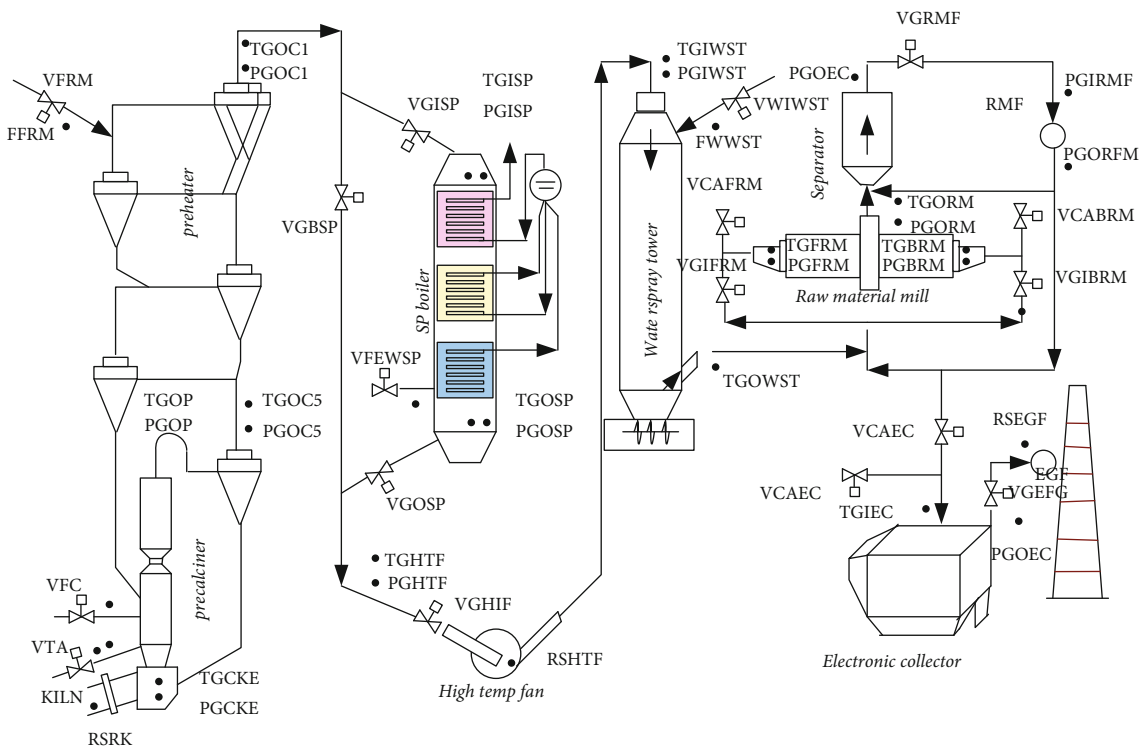

Figure 7: Control valves and measuring points of the coordinated control subsystem at the rear of the cement kiln.

models. If some uncertain factors in the process are ignored and a relevant mathematical model is established in a relatively ideal state, the results will be far from the actual situation, and the value and significance obtained will be extremely low. Therefore, the method of fuzzy control is adopted in this paper, and the control rules that need to be specifically expressed will be expressed in a fuzzy way in natural language. And it allows the controlled object to be controlled without establishing a mathematical model of the relevant controlled object. There are washing machines, air conditioners, microwave ovens, vacuum cleaners, cameras, and camcorders in household appliances; in the field of industrial control, there are water purification treatment, fermentation process, chemical reaction kettle, cement kiln, and so on. The exhaust gas discharged from the SP boiler should be reasonably controlled, especially the temperature of the exhaust gas should be controlled within a reasonable range, so as to meet the requirements of other equipment in the system such as high temperature fans and raw grinding systems. If the temperature of the waste gas is too high, the waste gas cannot be recycled; if the temperature is too low, the raw meal cannot be cooled by cold air and dried. In order to stably control the air temperature of the air inlet of the high temperature fan, a cold air valve is generally set up on the forehead of the high temperature fan. According to the change of the air temperature of the air inlet, it can be opened and closed appropriately to adjust the temperature of the exhaust gas. The raw meal input and the fuel input are also closely related, and it is necessary to coordinate the control of the two.

The coordinated control subsystem can mainly control SP boiler, raw meal mill, dust collector, and high-temperature fan. This subsystem participates in the relevant control, mainly in order to maintain the normal operation of the SP boiler and cement kiln system, while maintaining the relevant modifiable control parameters within a reasonable and standard range. The feed water of SP boiler comes from the low temperature economizer of the AQC boiler, and it absorbs heat again to generate superheated steam, which is mixed with the superheated steam of the AQC boiler and then goes to the steam turbine to generate power. The kiln tail control subsystem is mainly composed of seven parts. These seven parts mainly control the following objects: SP boiler feed water flow, coal feeder, raw meal feeder, high temperature fan speed, raw meal mill head cooling air valve, raw meal mill tail cooling air valve, flow through SP boiler gas flow, and humidification tower water spray. Figure 7 shows the location of the control valves and measuring points of the kiln tail control subsystem on the production line. It selects a certain field cement production line and conducts a 48-hour operation measurement without adding the fuzzy control system and adding the fuzzy control system. The relevant data were recorded and analyzed every 24 seconds. The actual operating conditions of the SP boiler in both cases are shown in Figure 8.

According to the relevant data in Figure 8, a detailed comparison of the temperature and pressure of the main steam in the two modes shows that compared with the temperature and pressure of the main steam in the traditional control mode, in the coordinated control mode, the temperature

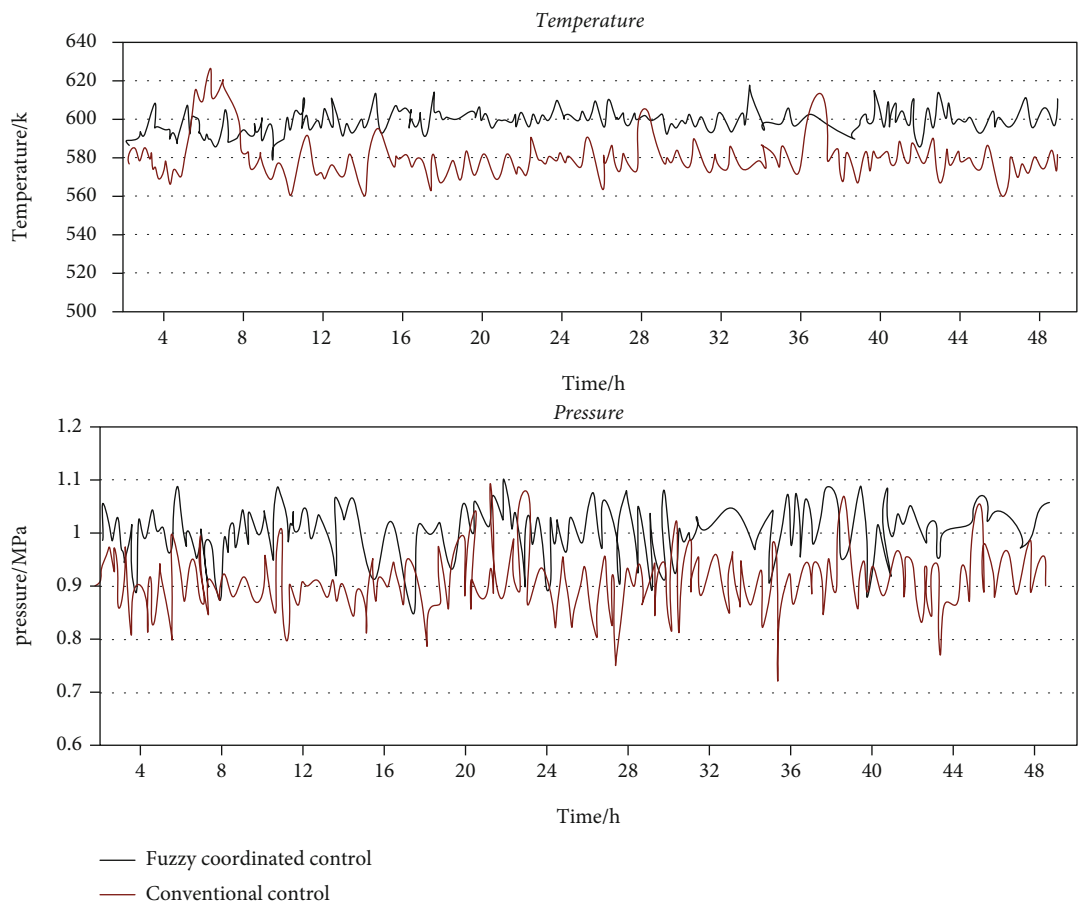

Figure 8: Comparison of main steam temperature and pressure of SP boiler based on fuzzy control and traditional mode.

and pressure of the main steam in the SP boiler are higher, and comparing the average temperature and pressure of the two, which is also the coordinated control mode, is significantly higher than the traditional control mode. The specific data and further analysis are given as follows: In the coordinated control mode, the average temperature of the main steam is 602.13 K, the peak temperature is 619.53 K, and the minimum temperature is 581.21 K. In the traditional control mode, the temperature of the main steam has obvious differences, which are 577.62 K, 629.88 K, and 560.48 K, respectively. Obviously, in the coordinated control mode, the temperature fluctuation of the main steam is significantly reduced, and its fluctuation range is 38.32 K; and the average temperature is increased, and the increase rate is 4.24%. The comparison of the main steam pressure of the two shows that in the coordinated control mode, the peak pressure is 1.09 MPa, the minimum pressure is 0.87 MPa, and the average pressure is 0.96 MPa; the corresponding pressure values of the main steam under the traditional control mode are 1.07 MPa, 0.71 MPa, and 0.88 MPa, respectively. It can be concluded that in the coordinated control mode, the fluctuation range of the pressure of the main steam is also objectively reduced to 0.22 MPa, and the increase rate of the average pressure is 9.09%. From the comparison and analysis of the above data, it can be seen that in the coordinated control mode, the fluctuation of the temperature and pressure of the main steam is smaller, and the amplitude change is also smaller.

4.2. Demand for Coordinated Control of Waste Heat Boiler and Steam Turbine Load Based on Fuzzy Control. The steam turbine generator set is driven by the exhaust gas in the cement kiln and the heat carried by it to generate electricity, which is the basic principle of the pure low-temperature waste heat power generation technology in cement production. The amount of power generation depends on many factors. If the flow rate and temperature of the waste gas in the cement kiln increase continuously, the power generation generated by the waste heat will also increase, and vice versa. At present, the cement production adopts the new dry process cement production technology, which will cause obvious fluctuations in the temperature of the exhaust gas in the entire cement kiln and will have a corresponding impact on the waste heat that can be used later. This will eventually lead to significant fluctuations in steam volume and steam temperature in the boiler, which will adversely affect the operation of the entire generator set. Therefore, in order to ensure the stable and reliable operation of the generator set, both the boiler system and the generator set should be coordinated and controlled, so as to adjust the fluctuation range as much as possible and increase the power generation.

Table 1: Deaerator and hot water well water level fuzzy control variables.

Variable	Basic domain	Quantitative universe	Fuzzy subset
Deaerator water level deviation value	(-999 mm, 999 mm)	(-5, 5)	{TH, SH, O, SL, TL}
Condenser water level deviation value	(-999 mm, 999 mm)	(-5, 5)	{TH, SH, O, SL, TL}
Condensate flow correction value	(-5 t/h, 5 t/h)	(-5, 5)	{TH, SF, O, SS, TS}
Condensate return flow correction value	(-5 t/h, 5 t/h)	(-5, 5)	{TH, SF, O, SS, TS}

Table 2: Deaerator water level deviation language variable assignment.

Water level deviation range (%)	Quantization level	TH	H	O	L	TL
≥-999	-5	0	0	0.1	0.6	0.9
(-999, -800)	-4	0	0	0.3	0	0.4
(-800, -600)	-3	0	0	0.2	1	0.7
(-600, -400)	-2	0	0	0	0.4	0
(-400, -200)	-1	0	0.2	0.8	0.2	1
(0, 200)	0	0	0.1	0	0.1	0
(200, 400)	1	0	0.4	0.2	0.3	0
(400, 600)	2	0.3	0.7	0	0	0
(600, 800)	3	0.6	0.9	0	0	0
(800, 1000)	4	0.7	0	0.9	0	0
>999	5	0.9	0.2	0	0	0

In order to reasonably coordinate the control of the boiler system and the generator set, the fuzzy control mode is used to optimize and adjust it. A fuzzy controller is established with a three-dimensional structure, in which there are three input variables, which are front pressure, boiler heat signal, and turbine power deviation. There is only one output variable, which is the correction value of the set value of the load regulator. According to the actual situation, the time t and the measured value N are reasonably selected, and the time and measured value selected by the controller are 60 s and 5 times, respectively. Through a detailed analysis of the thermal process and combined with relevant experience, the variables of the controller, its quantization level range, fuzzy subsets, etc. will be determined, as shown in Table 1.

The fuzzy relationship assignments are shown in Table 2.

The actual function of the fuzzy controller designed in this paper needs to be realized by software. Different operations of the control software can control the power of the steam turbine, the water level of the condenser, and the water level of the deaerator accurately. We select a cement plant for field simulation, and the data collected under traditional control mode and fuzzy control mode are shown in Figure 9.

It can be clearly seen that the coordinated control effect of the production line intelligent system based on fuzzy control is better. And the value of AQC boiler in the range of -50 to 50 is as high as 92.66%, while that of SP boiler is only 83.27%.

4.3. Comparative Analysis of Fuzzy Control and Traditional Control Experiments. The optimal operation of the pure low-temperature waste heat power generation system is to make full use of the waste heat of the waste gas produced by the new dry process cement production. Cement clinker production and waste heat power generation system is a complex physical and chemical process. It involves combustion, raw meal decomposition, clinker sintering, fluid mechanics, heat transfer, thermodynamics, environmental science, mechanical engineering, and other disciplines. It reduces the influence of the waste heat power generation system on the cement production process, avoids the large fluctuation of the main steam parameters, meets the long-term stable and efficient operation of the steam turbine, and increases the power generation per ton of clinker of the waste heat power generation system. The start-up of waste heat boilers and steam turbines is divided into two types: hot start and cold start. When the waste heat boiler has a short shutdown time and has a certain pressure and temperature, it can be started in a hot state. Because of its small heating and boosting range and a large allowable rate of change, the speed of heating and boosting is faster than that of cold startup, which shortens the startup time. Combined with the requirements of the thermal system and thermodynamic analysis, the optimal start-up method of the waste heat boiler under different thermal conditions is formulated. The main steam pressure is 0.5 MPa-1.0 MPa, and the temperature is between 468 K and 528 K, which can quickly open the waste heat boiler. It slowly opens the inlet baffle of the sedimentation chamber and closes the baffle of the small residual air flue gas channel, so that the amount of flue gas passing through the boiler is gradually increased, and the furnace temperature is kept rising slowly at a rate of 6 K/min. It adjusts the opening of the warm pipe steam exhaust valve according to the main steam pressure and temperature. When the pressure is higher than 0.8 MPa

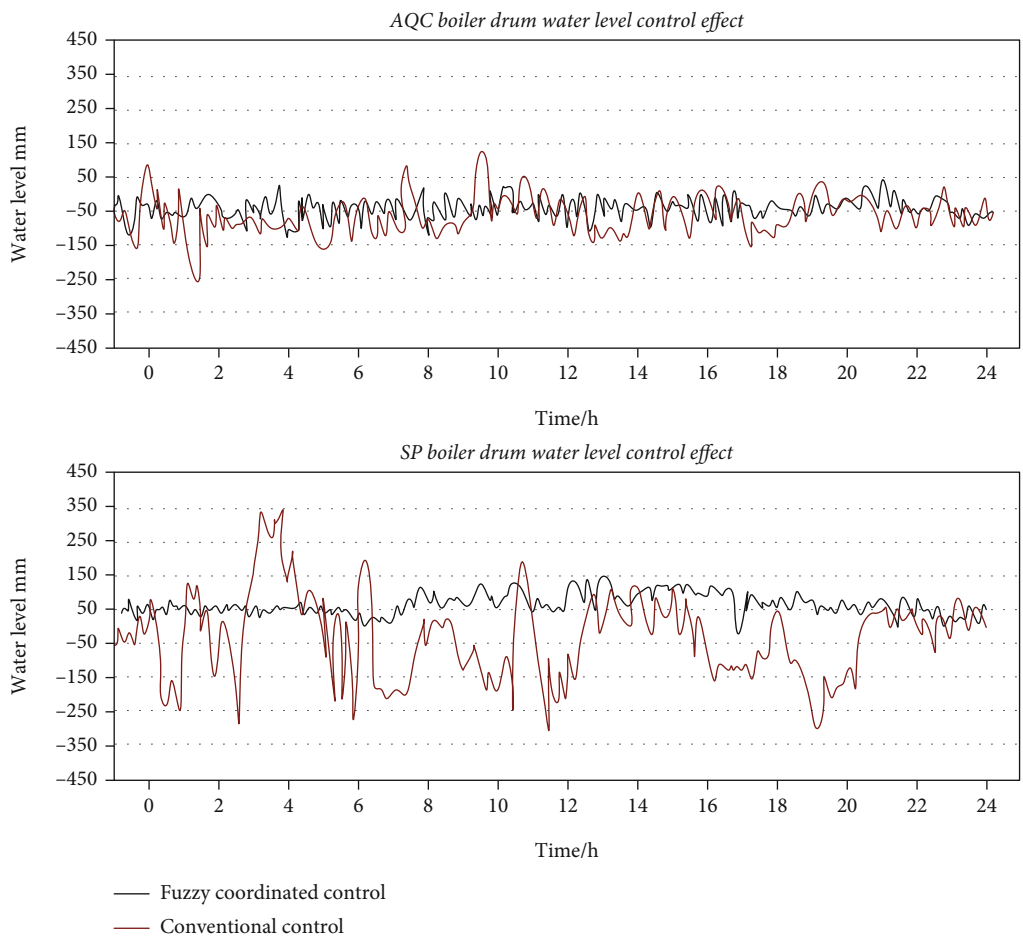

Figure 9: Drum water level distribution of AQC and SP boilers based on fuzzy control and traditional mode.

and the temperature is higher than 528 K, the steam exhaust valve of the heating pipe is fully opened to perform rapid heating; when the pressure is higher than 0.9 MPa and the temperature is higher than 568 K, the steam turbine can be started. The main steam pressure is lower than 0.5 MPa. When the temperature is lower than 468 K, it slowly opens the inlet baffle of the sedimentation chamber and closes the baffle of the small residual air flue gas channel, so that the amount of flue gas passing through the boiler increases gradually, keeping the furnace temperature rising slowly at a rate of 4 K/min; when the furnace temperature rises to 468 K, it can start quickly again. Figure 10 can be obtained.

In the production process of the cement kiln production line, after the exhaust gas is processed by the SP boiler, the flow and stability of the exhaust gas will tend to be relatively stable. Therefore, the start-stop status of the SP boiler depends on the production status of the cement kiln. When the cement kiln stops producing cement or its production status is not stable, the boiler will be shut down. When the raw material is put into the cement kiln or the waste heat power generation system stops running, the SP boiler will start up accordingly. For the analysis of the above two situations, before the raw materials are put into the cement kiln, the waste heat boiler needs to be operated under certain thermal conditions. The successful establishment of thermal

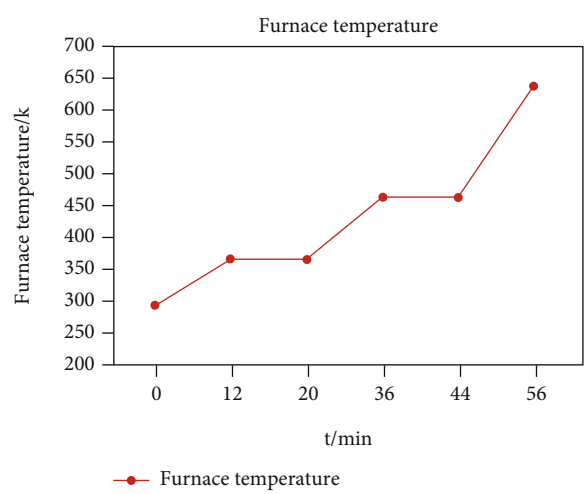

Figure 10: AQC boiler heating process.

conditions requires a certain period of time, during which time the exhaust gas will be discharged in large quantities. Therefore, it is necessary to recycle the waste gas before feeding. At this time, it is necessary to operate the SP boiler to recover the waste heat, so as to promote the steam turbine

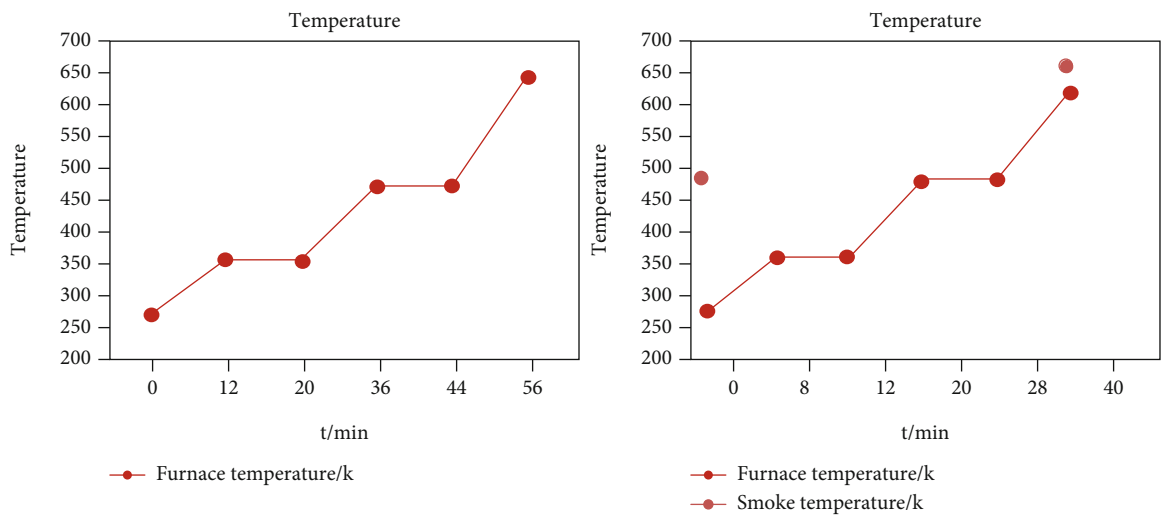

Figure 11: SP boiler heating process.

Table 3: 70-hour running data statistics.

	Statistical parameters	Traditional control	Fuzzy control
Clinker production	Raw meal feed amount (t)	11662.74	11680.43
	Clinker production (t)	7836.21	7877.49
	Coal supply (t)	996.47	923.52
	Production power consumption (kWh)	607142	600033
	Standard coal consumption per ton of clinker (kgce/t)	118.94	109.66
Waste heat power generation	Power generation (kWh)	293138	314675
	Power supply (kWh)	276542	297611
	Self-consumption rate (%)	7.66	7.64
	Power generation per ton of clinker (kWh/t)	38.94	40.02

to generate electricity. In the latter case, the waste heat boiler only needs to operate normally, as shown in Figure 11.

In order to rationally utilize the large amount of waste heat generated in the production process of cement kilns, a pure low-temperature waste heat power generation system is used to optimize the production process. While ensuring the stability of the entire production process and the fluctuation range of the main steam parameters, it can also maintain the stable and long-term power generation of the steam turbine. This further increases the power generation capacity of the waste heat power generation system. It should be noted that the waste heat boiler and steam turbine will work under two different operating conditions, which are hot start and cold start, respectively. If it is needed to work normally in a warm-start state, the conditions that need to be met are as follows: The waste heat boiler has a short shutdown time and can maintain a certain temperature and pressure in the furnace. Because under such conditions, the variation of temperature and pressure is very small, allowing larger changes to occur, and the rising rate of temperature and pressure is also significantly higher than that of cold start. According to the relevant knowledge and research of thermodynamics, this paper will analyze and determine the correct and reasonable selection of the start-up state of the waste heat boiler under different conditions. When the pressure range of the main steam is 0.5 MPa-1.0 MPa and the temperature range is 468 K-528 K, the boiler can be started quickly. When the pressure and temperature of the main steam reach 0.8 MPa and 528 K, respectively, the exhaust valve can be fully opened to make the warm pipe heat up quickly. When its pressure and temperature are 0.9 MPa and 528 K, respectively, turn on the steam turbine; and when the temperature and pressure drop to 0.5 MPa and 468 K, respectively, it gradually opens the baffle of the settling chamber and close the baffle of the flue gas channel to increase the amount of flue gas in the boiler. The actual test was carried out on the cement clinker production system and the waste heat power generation system, respectively, so that the two were continuously working for 48 hours under running and nonrunning conditions, and during the working process of the two, there is no situation of various kinds of stop working. The obtained data are shown in Table 3.

It can be seen from Table 3 that the coordinated optimization system using fuzzy control has less demand for feeding materials, less energy consumption in the production

process, more power generation, and the average income can be increased by 4.87%. This verifies the optimization effect of the coordinated control system of the cement clinker production line.

5. Discussion

Through the in-depth research and analysis of the cement clinker production system and the waste heat power generation system, this paper draws the law of the mutual influence between the two. And on this basis, we select the appropriate control parameters. Accordingly, this paper proposes relevant measures that enable coordinated control of the two systems. At the same time, under the guidance of fuzzy control theory and based on the proposed control strategy, it has carried out practical development of the coordinated optimal control system. In this paper, in order to reasonably control the water level of the steam drum of the waste heat boiler, a set of special and applicable water level control method is studied. There are three basic control methods for drum water level control: single-impulse control, double-impulse control, and triple-impulse control. There are many improvement methods, such as online self-tuning PID control, fuzzy method control, improved fuzzy three-impulse control, and predictive model control.

6. Conclusions

According to the coordinated optimization control system developed in this paper, the actual coordinated operation of the cement clinker production system and the waste heat power generation system is analyzed and researched, and the control methods of various processes of the latter are individually optimized. From all the data obtained, we select the best data to form the best control curve and method. Through the in-depth study of this paper, it can be concluded that under the guidance of the fuzzy control method, the developed coordinated optimal control system works well. It requires less materials and significantly reduces energy consumption, while the actual power generated by the power generation system increases, and the overall system yields an increase of 4.87%. It can be seen from the above research that the coordinated optimal control system has practical and effective utility.

Data Availability

No data were used to support this study.

Conflicts of Interest

The authors declare that there are no conflicts of interest regarding the publication of this article.

Acknowledgments

This article is one of the phased results of the national key research and development project "Data Intelligence Driven Real-time Operation Optimization Technology Research" (2020YFB1712202). This article is one of the phased achievements of the Jilin Province Science and Technology Development Project "Research on the Key Technology of Intelligent Grinding and Polishing of Complex Blade Robot Force Positions" (20190302122GX). This article is one of the phased achievements of the scientific research planning project of the Jilin Provincial Department of Education, "Research on the Force Position Parallel Grinding and Polishing Machining Mechanism and Motion Planning of Complex Blade Robots" (JJKH20200747KJ). This article is one of the phased achievements of the China Postdoctoral Science Foundation project "Aeronautical Blade Robot Force Position Parallel Grinding and Polishing Processing Mechanism and Motion Planning" (2021M692457).

References

[1] S. Yan, A. Zhang, H. Zhang, J. Wang, and B. Cai, "Optimized and coordinated model predictive control scheme for DFIGs with DC-based converter system," *Journal of Modern Power Systems and Clean Energy*, vol. 5, no. 4, pp. 620–630, 2017.

[2] C. Li, L. Zeng, B. Zhou et al., "An optimal coordinated method for EVs participating in frequency regulation under different power system operation states," *IEEE Access*, vol. 6, pp. 62756–62765, 2018.

[3] K. Zhu, S. Joshi, Q. G. Wang, and J. F. Y. Hsi, "Guest editorial special section on big data analytics in intelligent manufacturing," *IEEE Transactions on Industrial Informatics*, vol. 15, no. 4, pp. 2382–2385, 2019.

[4] P. Lade, R. Ghosh, and S. Srinivasan, "Manufacturing analytics and industrial internet of things," *IEEE Intelligent Systems*, vol. 32, no. 3, pp. 74–79, 2017.

[5] Y. Liu, X. Gao, and F. Dai, "Implementation of Mamdami fuzzy control on a multi-DOF two-wheel inverted pendulum robot," *Discrete & Continuous Dynamical Systems - S*, vol. 8, no. 6, pp. 1251–1266, 2015.

[6] B. Xu, F. Sun, Y. Pan, and B. Chen, "Disturbance observer based composite learning fuzzy control of nonlinear systems with unknown dead zone," *IEEE Transactions on Systems, Man, and Cybernetics: Systems*, vol. 47, no. 8, pp. 1–9, 2017.

[7] S. A. Abdul-Wahab, E. M. Hassan, K. S. Al-Jabri, and K. Yetilmezsoy, "Application of zeolite/kaolin combination for replacement of partial cement clinker to manufacture environmentally sustainable cement in Oman," *Environmental Engineering Research*, vol. 24, no. 2, pp. 246–253, 2019.

[8] T. G. Le, K. B. Yoon, and T. M. Jeong, "Degradation and reduction of small punch creep life of service-exposed Super304H steel," *Journal of Mechanical Science and Technology*, vol. 33, no. 11, pp. 5243–5250, 2019.

[9] T. Alam, "Fuzzy control based mobility framework for evaluating mobility models in MANET of smart devices," *Journal of Engineering and Applied Sciences*, vol. 12, no. 15, pp. 4526–4538, 2017.

[10] J. Bacik, F. Durovsky, P. Fedor, and D. Perdukova, "Autonomous flying with quadrocopter using fuzzy control and ArUco markers," *Intelligent Service Robotics*, vol. 10, no. 3, pp. 185–194, 2017.

[11] C. F. Juang, M. G. Lai, and W. T. Zeng, "Evolutionary fuzzy control and navigation for two wheeled robots cooperatively carrying an object in unknown environments," *IEEE Transactions on Cybernetics*, vol. 45, no. 9, pp. 1731–1743, 2015.

[12] S. Vrkalovic, T. A. Teban, and L. D. Borlea, "Stable Takagi-Sugeno fuzzy control designed by optimization," *International Journal of Artificial Intelligence*, vol. 15, no. 2, pp. 17–29, 2017.

[13] S. Saniuk and A. Saniuk, "Challenges of industry 4.0 for production enterprises functioning within cyber industry networks," *Production Engineering*, vol. 26, no. 4, pp. 212–216, 2018.

[14] S. Takahashi, Y. Shimizu, and Y. Mizutani, "Special issue on intelligent measurement for advanced production engineering," *International Journal of Automation Technology*, vol. 11, no. 5, pp. 681–681, 2017.

[15] Y. Yang, Z. Yuan, Z. Pi, W. Xia, C. Jiang, and K. Guo, "Construction and implementation of intelligent transparent automobile factories," *China Mechanical Engineering*, vol. 29, no. 23, pp. 2867–2874, 2018.

[16] T. M. Godinho, C. Costa, and J. L. Oliveira, "Intelligent generator of big data medical imaging repositories," *IET Software*, vol. 11, no. 3, pp. 100–104, 2017.

[17] E. Robinson, H. Balakrishnan, M. Abramson, and S. Kolitz, "Optimized stochastic coordinated planning of asynchronous air and space assets," *Journal of Aerospace Computing, Information, and Communication*, vol. 14, no. 1, pp. 10–25, 2017.

[18] Y. Guo, Q. Wu, H. Gao, X. Chen, J. Ostergaard, and H. Xin, "MPC-based coordinated voltage regulation for distribution networks with distributed generation and energy storage system," *IEEE Transactions on Sustainable Energy*, vol. 10, no. 4, pp. 1731–1739, 2019.

[19] Y. Han, K. Zhang, H. Li, E. A. A. Coelho, and J. M. Guerrero, "MAS-based distributed coordinated control and optimization in microgrid and microgrid clusters: a comprehensive overview," *IEEE Transactions on Power Electronics*, vol. 33, no. 8, pp. 6488–6508, 2018.