IVECO

Corporate Presentation - Technology.

FIAT INDUSTRIAL

December 2010

Iveco Technology

Iveco believes in the application of technology where it benefits product performance or manufacturing processes.

Iveco is committed to product innovation, striving to make available to customers the very best in products not only fit for purpose but able to excel.

Innovation requires the application of technology.

Agenda

IVECO

- Clean Diesel Engines
- Natural Gas Engines
- Transmissions
- Hybrid and Electric Vehicles
- Safety
- Telematics
- Armoured Protection
- Fire Appliance Ladders

FIAT INDUSTRIAL

Agenda

Clean Diesel Engines

Natural Gas Engines

Transmissions

Hybrid and Electric Vehicles

Safety

Telematics

Armoured Protection

Fire Appliance Ladders

Iveco Technology – FPT Diesel Engines

IVECO

- FPT - Fiat Powertrain Technologies is the Fiat Group manufacturer of engines and transmissions for Iveco vehicles.
- From Daily to Stralis and for the entire bus range, Iveco uses FPT advanced Diesel engines, which are state of the art products meeting the highest levels of tail pipe exhaust emissions and fuel economy.

FPT POWERTRAIN TECHNOLOGIES

FIAT INDUSTRIAL

Iveco Technology – Sofim Diesel Engines

IVECO

- The Sofim 4 cylinder 16 valve engines with a swept volume of 2.3 litre and 3.0 litre use the common rail injection system allowing multiple injection events for noise reduction and good in-cylinder emissions control.
- These engines use cooled EGR (Exhaust Gas Recirculation) to meet Euro 4 (light duty regime) emission levels. A new 3.0 litre version with 2 stage turbocharger for Daily vehicles is certified (heavy duty regime) to the EEV (Enhanced Environmentally friendly Vehicle) standard.
- These engines are used in ECODaily vehicles

FPT POWERTRAIN TECHNOLOGIES

FIAT INDUSTRIAL

Iveco Technology – Tector Diesel Engines

IVECO

- The Tector 4 valve per cylinder 4 and 6 litre nominal displacement engines use the common rail injection system allowing multiple injection events for noise reduction and good in-cylinder emissions control.
- These engines use optimised combustion technology in combination with SCR (Selective Catalytic Reduction) exhaust after treatment achieving Euro V emission levels.
- On request, these engines may be further optimised and certified to the EEV (Enhanced Environmentally friendly Vehicle) standard, the most severe among European standards.
- Tector engines are used in Eurocargo trucks and specific bus and coach models.

FPT POWERTRAIN TECHNOLOGIES

FIAT INDUSTRIAL

Iveco Technology – Cursor Diesel Engines

IVECO

- Cursor 6 cylinder 24 valve engines are available with nominal displacements of 8 litres, 10 litres and 13 litres. The engines use electronic unit injectors to ensure high injection pressures with precise fuel metering.
- These engines use optimised combustion technology in combination with SCR (Selective Catalytic Reduction) exhaust after treatment achieving Euro V emission levels.
- On request, these engines may be further optimised certified to the EEV (Enhanced Environmentally friendly Vehicle) standard, the most severe among European standards.
- Cursor engines are used in Stralis, Trakker and in city, intercity buses as well as tourism coaches.

FPT POWERTRAIN TECHNOLOGIES

FIAT INDUSTRIAL

Agenda

Clean Diesel Engines

Natural Gas Engines

Transmissions

Hybrid and Electric Vehicles

Safety

Telematics

Armoured Protection

Fire Appliance Ladders

Iveco Technology – FPT Natural Gas Engines

For ECODaily, Eurocargo and Stralis trucks and Irisbus urban buses and minibuses, Iveco uses FPT advanced natural gas engines, which are state of the art products meeting the highest levels of tail pipe exhaust emissions standards and fuel economy.

Iveco Technology – Natural Gas Engine Emissions

IVECO

FPT POWERTRAIN TECHNOLOGIES	Gas Spec'n	CO (g/kWh)	NMHC (g/kWh)	CH_4 (g/kWh)	NOx (g/kWh)	Pm (g/kWh)
EEV (Directive 2005/55/EC)		3.00	0.40	0.65	2.00	0.020
N.B. Euro VI		4.00	0.16	0.50	0.40	0.010
Cursor 8 Litre 	G_{25}	2.10	0.07	0.20	0.25	0.001
200 kW	G_R	2.79	0.09	0.15	0.15	0.002
Tector 6 Litre 	G_{25}	1.40	0.006	0.012	0.47	0.002
147 kW	G_R	0.97	0.003	0.010	0.58	0.003
Sofim 3 Litre 	G_{25}	1.51	0.019	0.193	0.28	0.005
100 kW	G_R	1.35	0.029	0.148	0.38	0.005

N.B. Reference fuels: G_R = 87% CH_4, 13% C_2H_6 G_{25} = 86%CH_4, 14% N_2

FIAT INDUSTRIAL

Agenda

Clean Diesel Engines

Natural Gas Engines

Transmissions

Hybrid and Electric Vehicles

Safety

Telematics

Armoured Protection

Fire Appliance Ladders

Iveco Technology - Transmissions

IVECO

- By means of collaborative relationships with its tier 1 suppliers, Iveco vehicles are equipped with transmissions and power train components at the highest levels of quality, technology and sophistication.
- Manual and automated transmissions are supplied by FPT and ZF and hydrodynamic automatic transmissions are supplied by Allison, ZF and Voith.

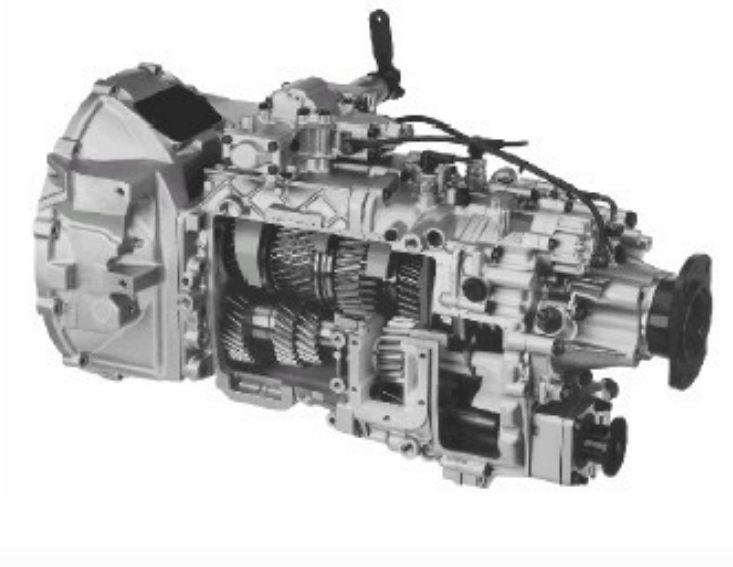

FPT POWERTRAIN TECHNOLOGIES

FIAT INDUSTRIAL

Iveco Technology – Automated Transmissions

IVECO

- Automated transmissions are mechanical transmissions driven through a friction clutch and have both manual and automatic operating modes. Actual gear selection is made automatically managed by the transmission computer and the clutch actuated similarly, the driver not having a clutch pedal.
- In manual mode the driver indicates his wish to change gear by means of an electrical switch and the gear change will be made subject to the change being possible without engine over-speed damage or performance loss.

- Daily models: 6 speed Agile
- Eurocargo models & coaches: 6 speed Eurotronic
- Stralis, Trakker & coaches: 12 speed Eurotronic

FPT POWERTRAIN TECHNOLOGIES

FIAT INDUSTRIAL

Agenda

IVECO

Clean Diesel Engines

Natural Gas Engines

Transmissions

Hybrid and Electric Vehicles

Safety

Telematics

Armoured Protection

Fire Appliance Ladders

FIAT INDUSTRIAL

Iveco Technology – Electric Vehicles

IVECO

Zero emission vehicles operating in our urban areas are appealing for the well being of residents and visitors.

Advanced battery technologies and sophisticated control systems today make electric vehicles a reality.

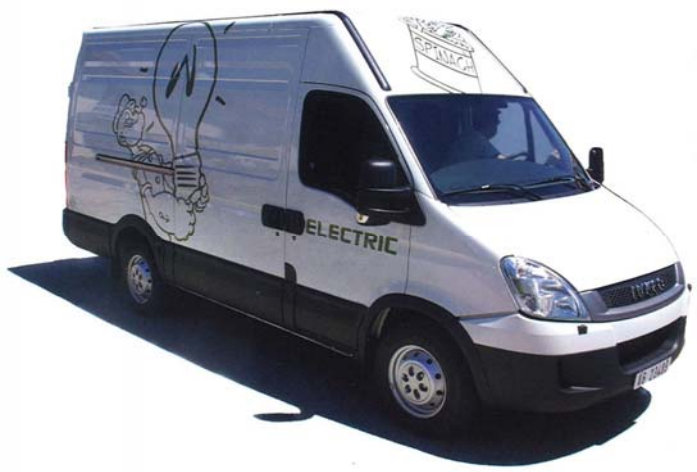

Iveco has extended electric vehicle technology from passenger vehicles to the freight distribution sector.

Daily Electric has an operational range of up to 130 km and a top speed electronically limited to 70 km/h.

FIAT INDUSTRIAL

Iveco Technology – Diesel-Electric Hybrid Vehicles

Hybrid vehicles are those having at least two power sources and at least one of them reversible.

One of these is usually an internal combustion engine as in conventional vehicles and the other is generally an electric motor fed by an energy storage system.

In the so called parallel hybrid configuration, drive may be by the internal combustion engine alone, by the electric motor alone or by the two operating together.

The prime objective of a hybrid powered vehicle is to reduce fuel consumption and hence CO_2 emissions. Savings of up to 30% can be achieved by the following hybrid features:

- Down-sized internal combustion engine.
- Starting from rest by the electric motor alone.
- Energy recovery during braking.

Iveco Technology – Daily Hybrid Components

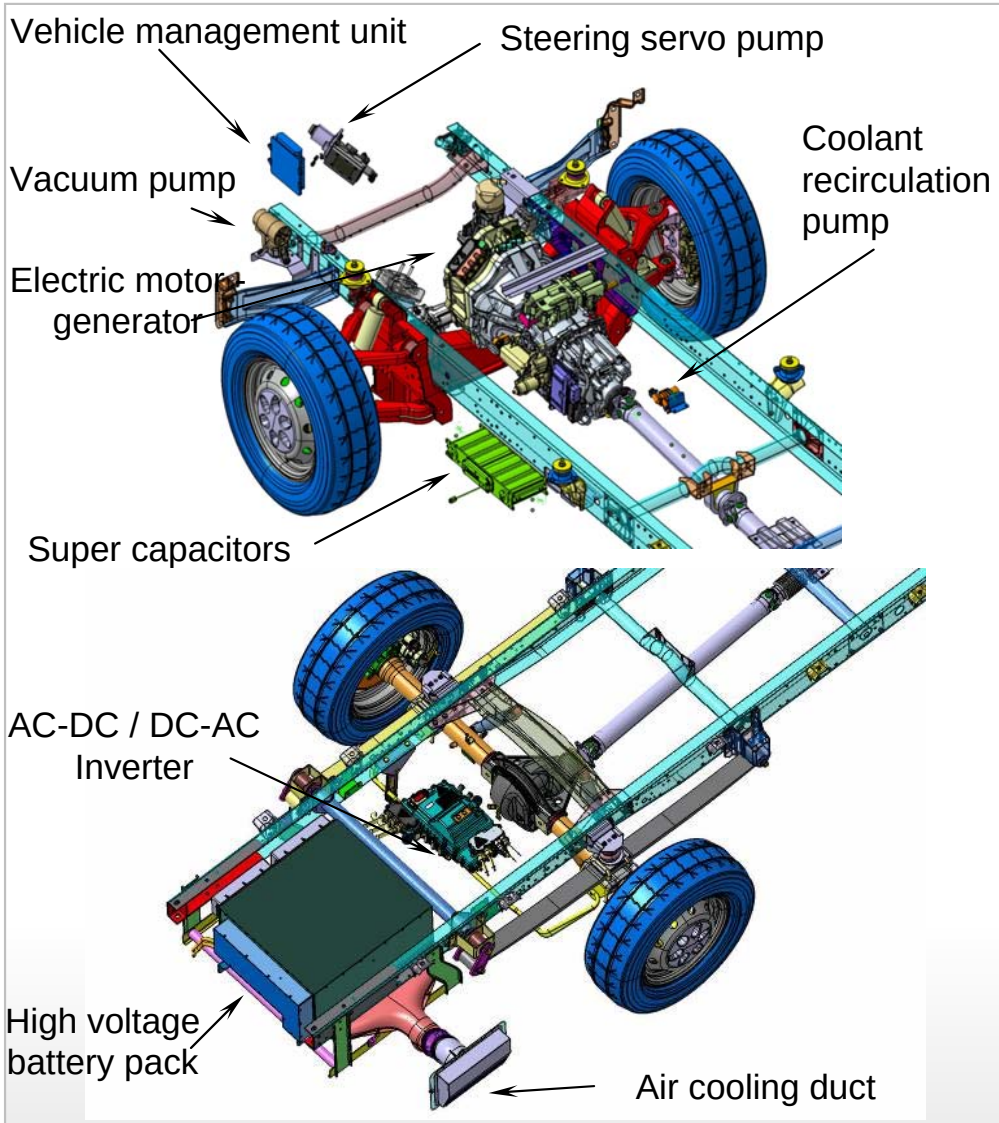

The Daily's 2.3 litre 116 cv (85 kW) Diesel engine (not shown in the picture) works in conjunction with the 44 cv (32 kW) electric motor-generator

In 2008, pre-production vehicles entered into a long term evaluation programme with important customers before series production in 2009

Iveco Technology – Parallel Hybrid Function

Electric traction motor/generator
Used to provide power to assist the internal combustion engine and as a generator to charge the batteries.

Robotised or automated transmission. The specification of this type of transmission allows the driver to simply press the accelerator and go.

Internal combustion engine

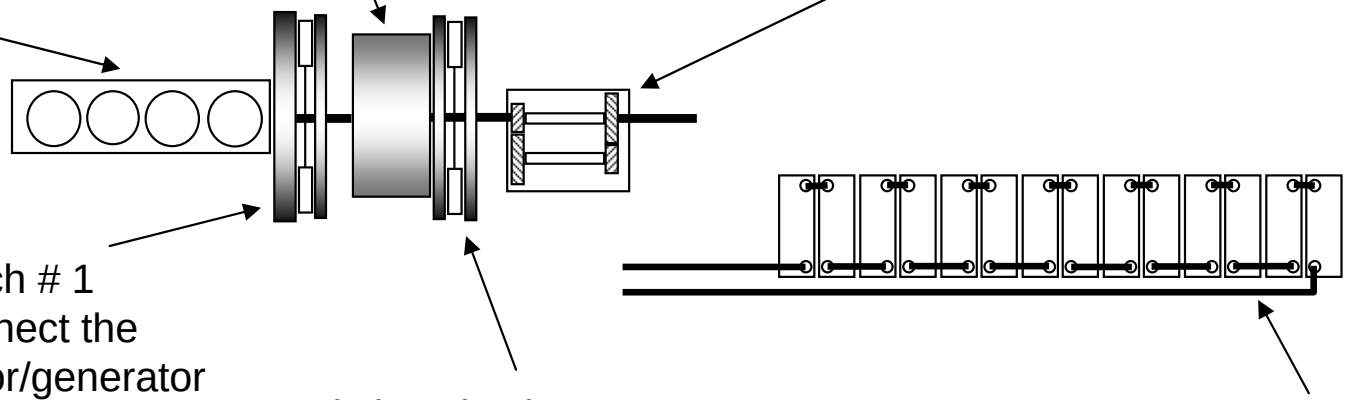

Friction clutch # 1
Used to connect the electric motor/generator to the engine for operation together or to separate them for electric motor/generator operation only. Control is by the management system.

Friction clutch # 2
Used for starting from rest and for gear changing. Control is by the robotised or automated transmission.

Electricity storage batteries to power the traction motor are charged by the traction motor in generator mode.

Iveco Technology – Eurocargo Hybrid

Eurocargo hybrid vehicles at 7.5t and 12t are undergoing field evaluation trials by important customers.

Used for urban distribution, these vehicles can save up to 30% in fuel consumption compared to conventional Diesel engined vehicles.

Agenda

IVECO

Clean Diesel Engines

Natural Gas Engines

Transmissions

Hybrid and Electric Vehicles

Safety

Telematics

Armoured Protection

Fire Appliance Ladders

FIAT INDUSTRIAL

Iveco Technology – Adaptive Cruise Control 2

- Cruise control used to maintain constant road speed within the limitations of engine power.
- Long range radar used for forward obstacle detection.
- Obstacle detection within predetermined road speed dependant range results in vehicle deceleration by engine power reduction and brake application.
- Cruise control automatically resumes when obstacle no longer present.

Iveco Technology – Collision Warning

- Obstacle detection by means of forward looking camera and long range radar.
- Obstacle detection results in visual and/or acoustic warning by electric/resettable seat belt tensioner.
- Haptical warning by brake application may also be present.

Iveco Technology – Electronic Stability Control

Selective wheel brake application and engine power modulation used to maintain vehicle directional (yaw) and roll control.

Iveco Technology – Lane Departure Warning (Acoustic)

- Vehicle based forward looking camera scans the road ahead.
- Acoustic warning to the driver should the vehicle unintentionally wander across the road lane delimiting markers.

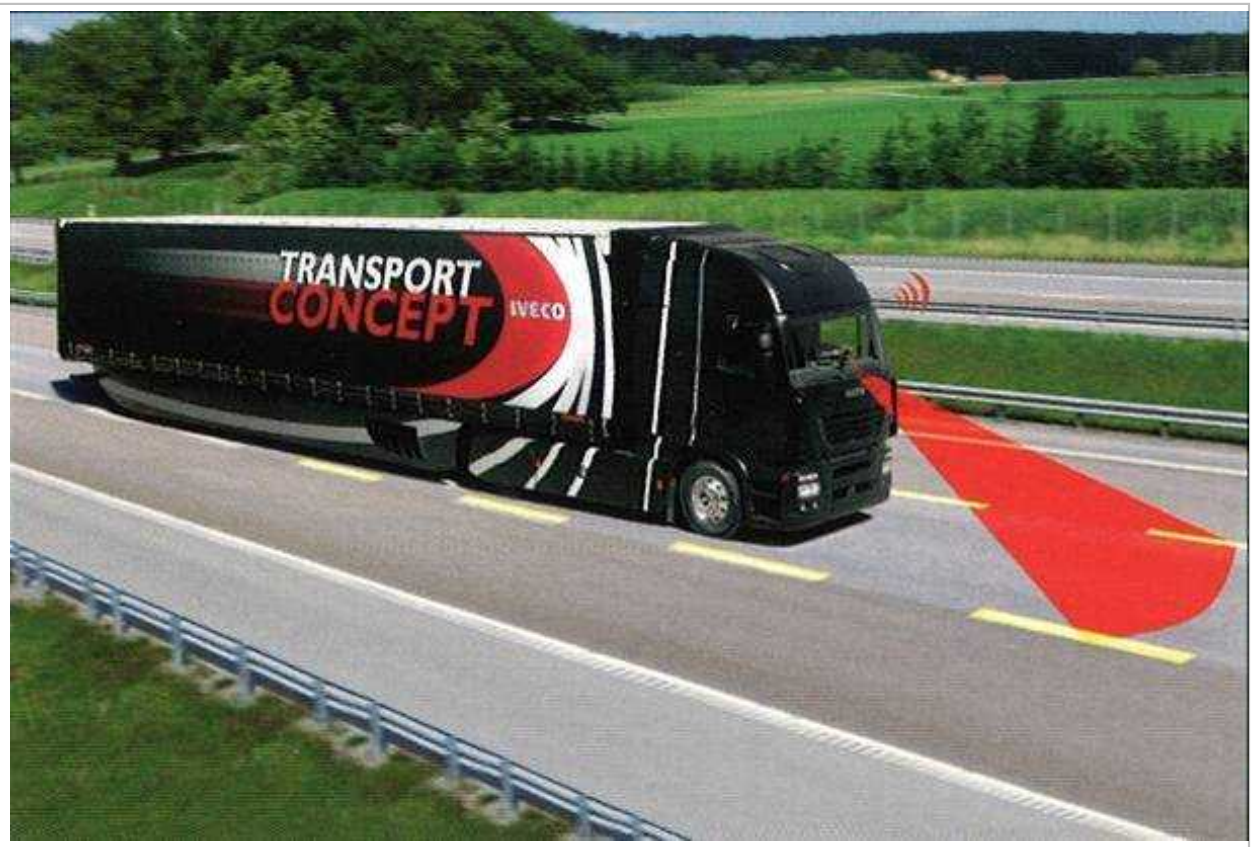

Iveco Technology – Active Lane Assistant (Haptical)

- Detection technology as previous slide.
- Servo motor on steering gear provides corrective torque to bring vehicle back into the lane.

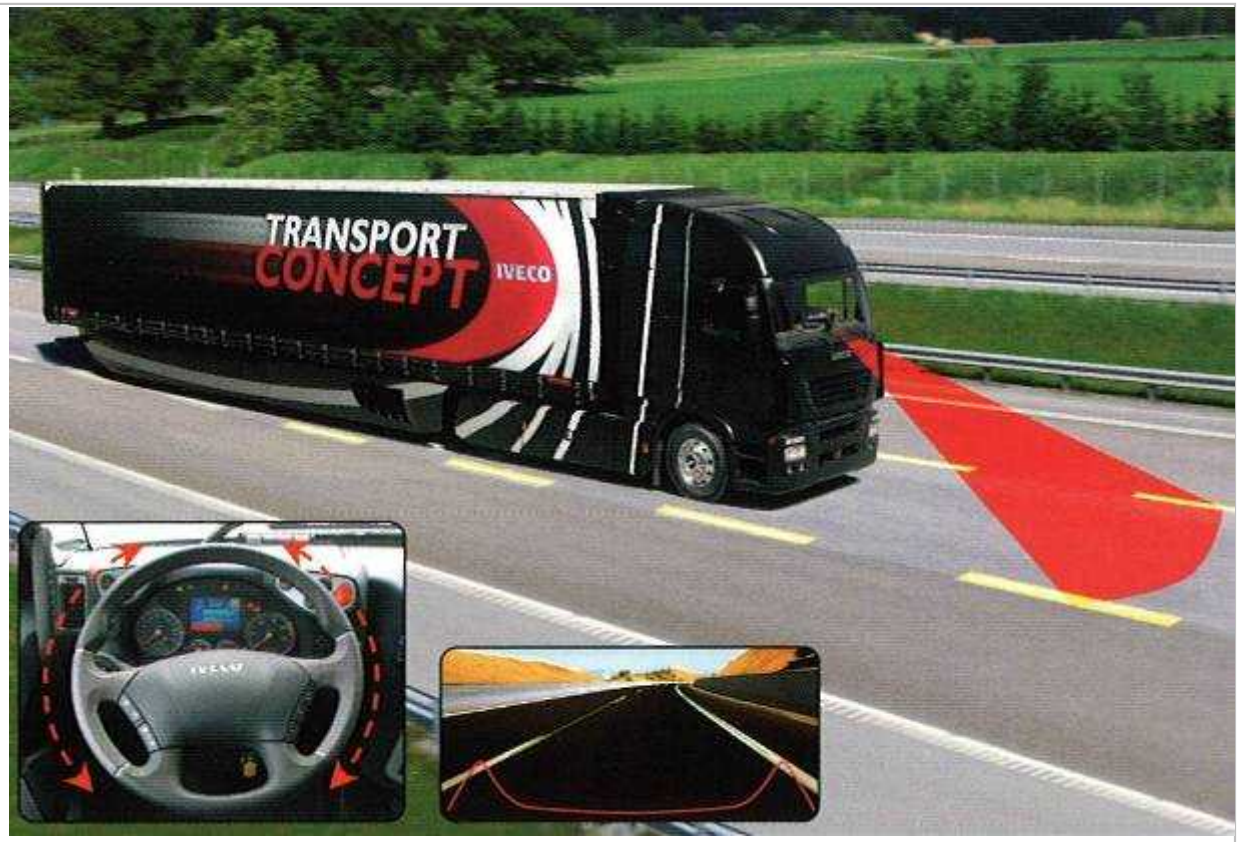

Iveco Technology – Lane Change Assistant

- Side facing radar scans for presence of other road users.
- Acoustic and visual warning alert driver if manoeuvre is initiated when obstacle detected.

Iveco Technology – Safe Start Support

A vehicle based ultrasonic sensor system monitors the front and immediate passenger side of the vehicle for road speeds from 0 – 30 km/h.

The presence of vulnerable road users entering the area surveyed provides an audible warning to the driver.

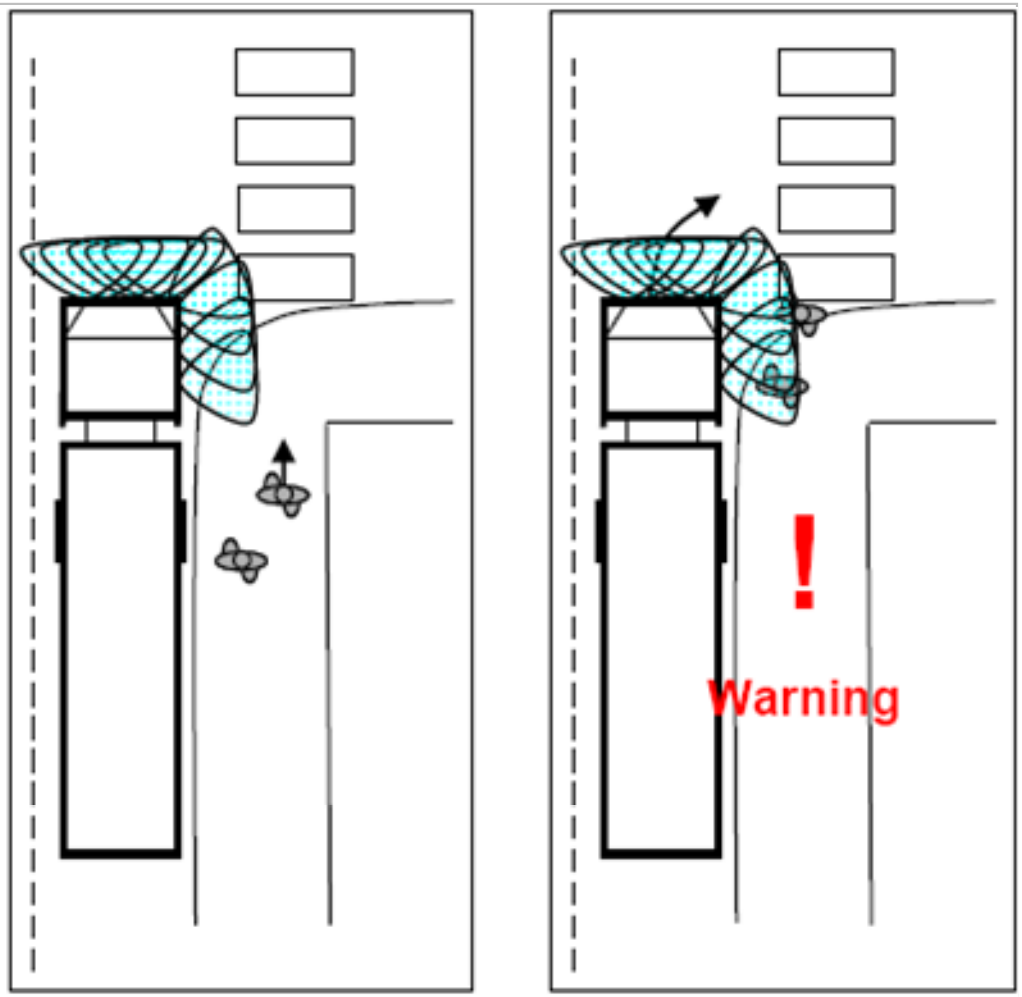

Agenda

IVECO

Clean Diesel Engines

Natural Gas Engines

Transmissions

Hybrid and Electric Vehicles

Safety

Telematics

Armoured Protection

Fire Appliance Ladders

FIAT INDUSTRIAL

Iveco Technology – Blue & Me Fleet

The Iveco telematics application is called Blue & Me Fleet

Blue & Me Fleet is designed as a fleet management tool by which suitably enabled fleet operators can actively manage their vehicle and driver assets remotely.

Blue & Me Fleet is sold as an option on all Iveco vehicles. The vehicle hardware comprises a data capture device able to communicate to the outside world using the mobile telephone network.

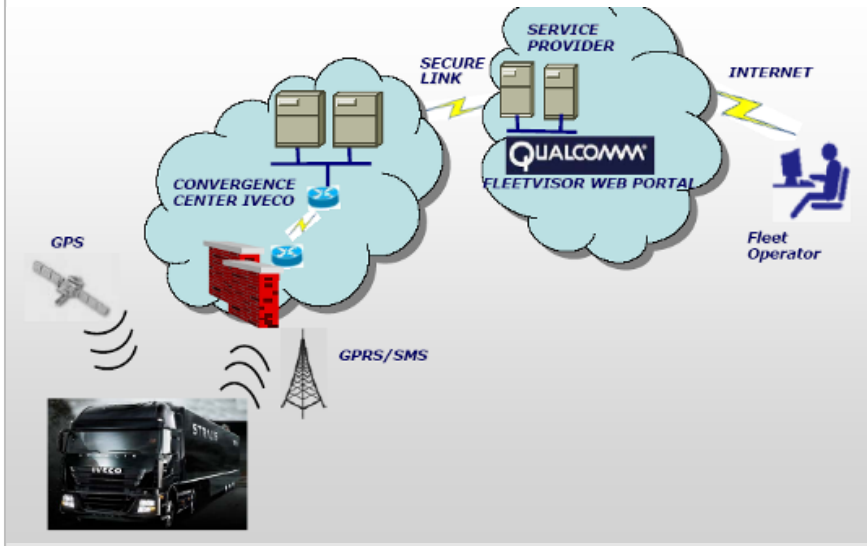

Qualcomm, the world leading telematics service provider provides a dedicated internet service to Blue & Me Fleet operators enabling users to obtain real time and historic vehicle data at their office based computer work station.

Iveco Technology – Fleet Management Services

IVECO

Fleet Management:

Vehicle data analysis and reporting

(messages set FMS or “pseudo FMS)

- Fuel consumption
- Vehicle distance and speed
- Vehicle usage

Track & Trace:

Vehicle position, tracing and “Geo-fencing”

Driver Management:

- Driver identification
- Driver activity report
- Driving style evaluation

Messaging:

- Message reception
- Text to speech
- Predefined answers management

Navigation:

- GPS data streaming via Bluetooth to external devices (i.e. PDA, Smartphone)

Entertainment and other services:

- MP3 player via USB PENDRIVE through vehicle audio system
- Bluetooth hands-free with voice activated dialling
- Voice recognition & Text to Speech

Remote Tachograph Data Download:

- Mass storage
- Driver card data

FIAT INDUSTRIAL

Iveco Technology – Vehicle Track and Trace

Last reported vehicle position

Iveco Technology – Driver Activities

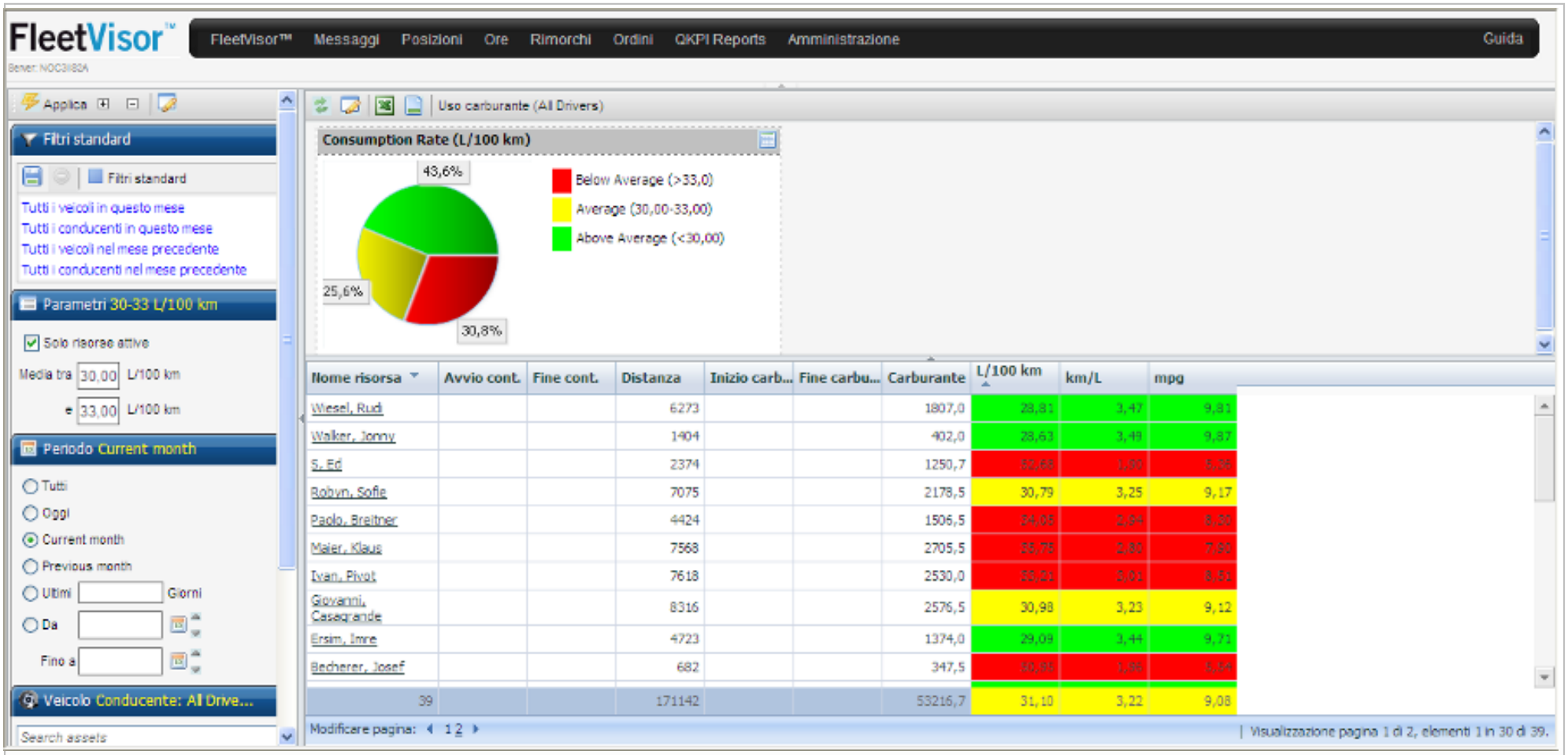

Permits fleet operator to define target consumption parameters

Reports on driver activities versus preset parameters

Iveco Technology – Maintenance Plan

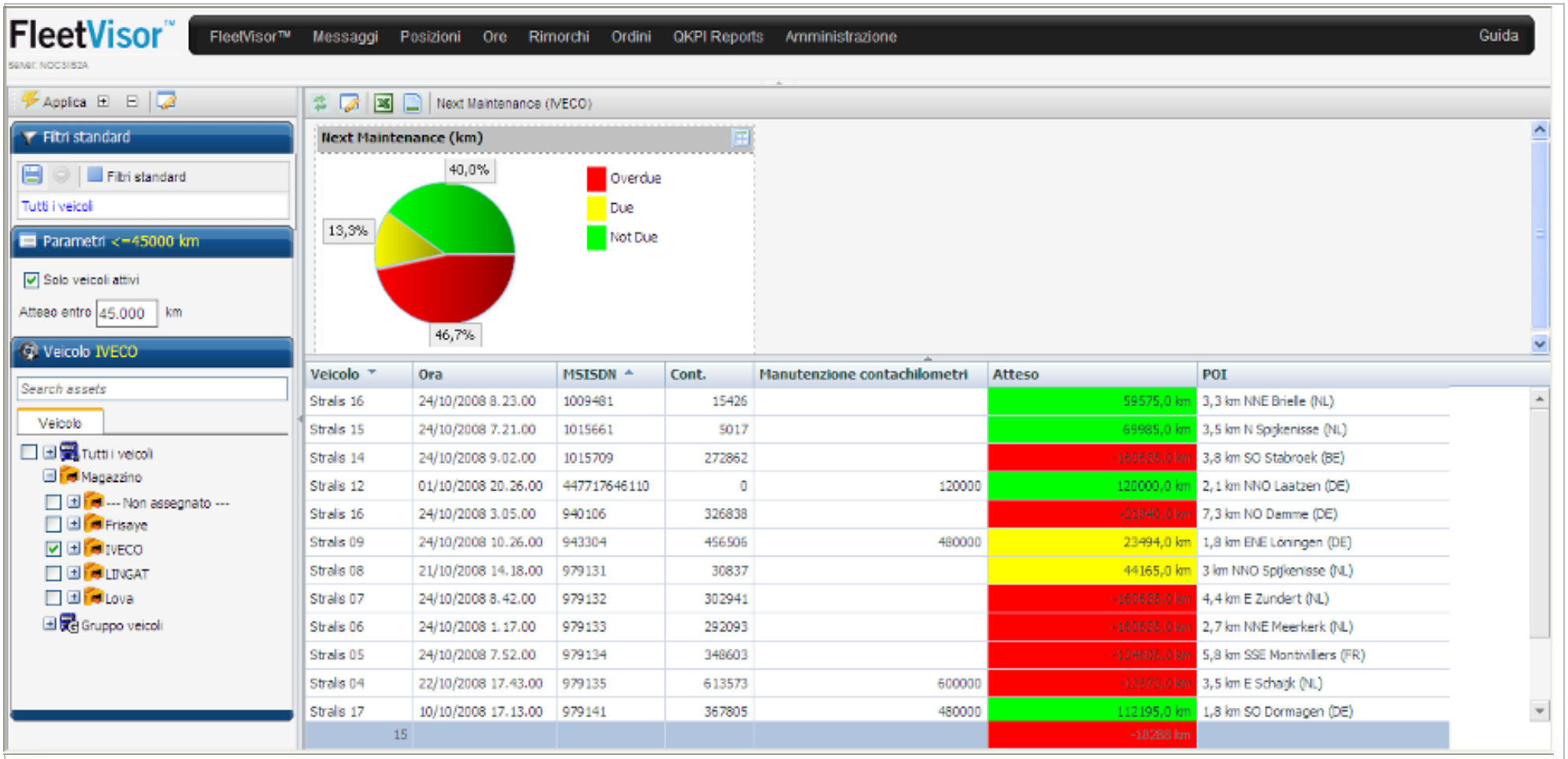

Permits fleet operator to define target maintenance parameters

Reports on vehicle versus preset parameters

Iveco Technology – Drivers' Scorecard

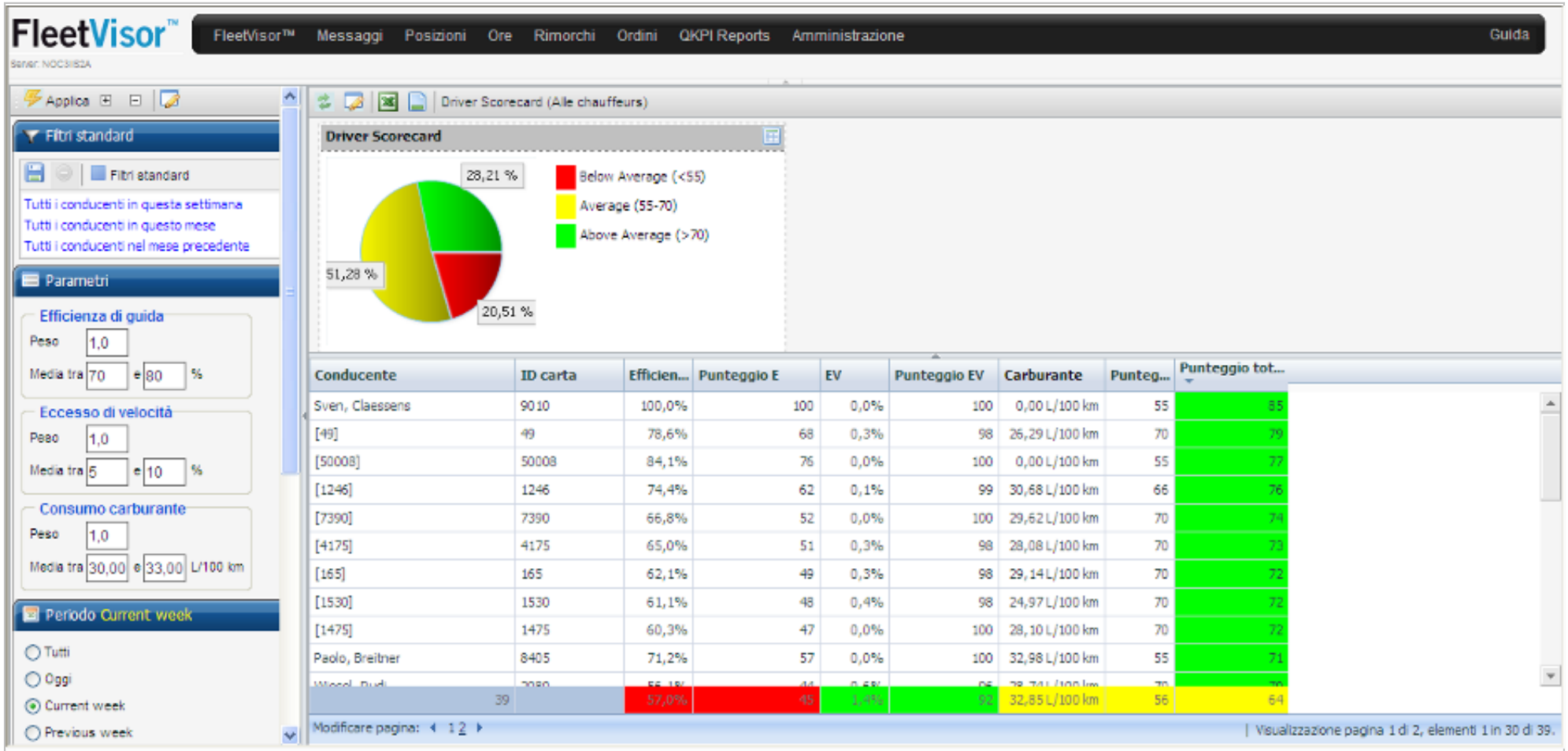

Conducente	ID carta	Efficien...	Punteggio E	EV	Punteggio EV	Carburante	Punteg...	Punteggio tot...
Sven, Claessens	9010	100,0%	100	0,0%	100	0,00 L/100 km	55	85
[49]	49	78,6%	68	0,3%	98	26,29 L/100 km	70	79
[50008]	50008	84,1%	76	0,0%	100	0,00 L/100 km	55	77
[1246]	1246	74,4%	62	0,1%	99	30,68 L/100 km	66	76
[7390]	7390	66,8%	52	0,0%	100	29,62 L/100 km	70	74
[4175]	4175	65,0%	51	0,3%	98	28,08 L/100 km	70	73
[165]	165	62,1%	49	0,3%	98	29,14 L/100 km	70	72
[1530]	1530	61,1%	48	0,4%	98	24,97 L/100 km	70	72
[1475]	1475	60,3%	47	0,0%	100	28,10 L/100 km	70	72
Paolo, Breitner	8405	71,2%	57	0,0%	100	32,98 L/100 km	55	71
39		57,0%	45	1,4%	92	32,85 L/100 km	56	64

Permits fleet operator to define performance target parameters

Reports on driver status versus preset parameters

Iveco Technology – Remote Data Download

IVECO

It is a legal requirement that digital tachograph data be downloaded every 3 months and the driver's card data be down loaded every 30 days.

Via Qualcomm web interface and using connected Smart Card Reader, selected vehicle tachograph download may be initiated.

An SMS signal is received by the vehicle's Blue & Me fleet controller and following system authentication download takes place to the Qualcomm web site and, if specified, to the fleet operator's data archiving service.

Data download of driver's card is also included.

This important facility means that essential fleet management activities may be carried out even when the vehicle is on the road, at work.

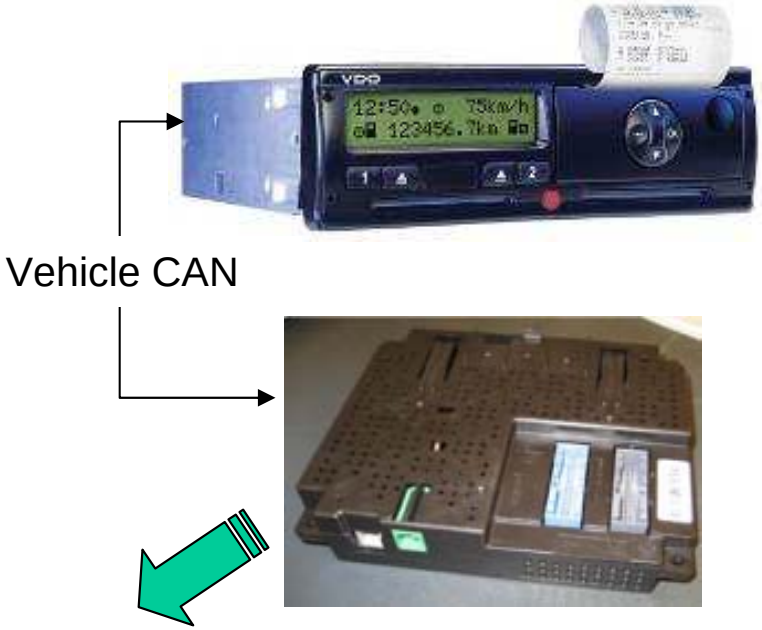

FIAT INDUSTRIAL

Agenda

IVECO

Clean Diesel Engines

Natural Gas Engines

Transmissions

Hybrid and Electric Vehicles

Safety

Telematics

Armoured Protection

Fire Appliance Ladders

FIAT INDUSTRIAL

Armoured Protection – 1

The LMV exploits industry leading occupant protection from concealed mines.

From the demountable crew compartment to driveline and other component configurations preventing them from becoming projectiles in the event of an explosion.

Roof mounted occupant seating gives enhanced protection in the event of cab floor deformation.

LMV is already widely recognised as a tactical vehicle offering unrivalled crew protection with patented armoured features.

Armoured Protection – 2

Innovative armoured protection panels, patented Iveco designs, allow the vehicle to be reconfigured, even in the field, according to the latest threat intelligence.

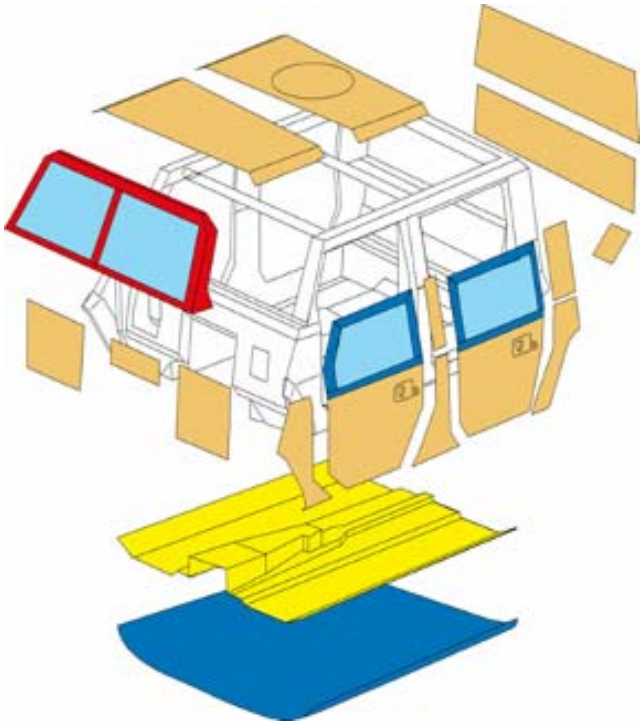

Protection kits are categorised as ‘light’, ‘medium’ or ‘heavy’, depending on perceived risk.

The sandwich construction of the undercarriage structure can be further enhanced to provide protection, even against anti-tank mines by the fitting of a blast shield.

LMV’s protection strategy is based on energy management – providing effective absorption or dissipation of energy.

Agenda

Clean Diesel Engines

Natural Gas Engines

Transmissions

Hybrid and Electric Vehicles

Safety

Telematics

Armoured Protection

Fire Appliance Ladders