ECE5463: Introduction to Robotics

Lecture Note 7: Velocity Kinematics and Jacobian

Prof. Wei Zhang

Department of Electrical and Computer Engineering
Ohio State University
Columbus, Ohio, USA

Spring 2018

Outline

- Introduction
- Space and Body Jacobians
- Kinematic Singularity

Jacobian

- Given a multivariable function $x = f(\theta)$, where $x \in \mathbb{R}^m$ and $\theta \in \mathbb{R}^n$. Its **Jacobian** is defined as

$$J(\theta) \triangleq \left[\frac{\partial f}{\partial \theta}(\theta)\right] \triangleq \left[\frac{\partial f_i}{\partial \theta_j}\right]_{i \le m, j \le n} \in \mathbb{R}^{m \times n}$$

e.g.: $f(\theta) = \begin{bmatrix} \sin(\theta_1+\theta_2) + e^{\theta_3} \\ 2\theta_1 + \theta_2^3 \end{bmatrix} \begin{matrix} \leftarrow f_1(\theta) \\ \leftarrow f_2(\theta) \end{matrix}$ $\quad J(\theta) = \begin{bmatrix} \cos(\theta_1+\theta_2) & \cos(\theta_1+\theta_2) & e^{\theta_3} \\ 2 & 3\theta_2^2 & 0 \end{bmatrix}$

$f: \mathbb{R}^3 \to \mathbb{R}^2$

- If x and θ are both a function of time, then their velocities are related by the Jacobian:

$$\dot{x} = \left[\frac{\partial f}{\partial \theta}(\theta)\right] \frac{d\theta}{dt} = \underbrace{J(\theta)}_{\in m \times n}\dot{\theta} = [J_1(\theta) \; J_2(\theta) \cdots J_n(\theta)] \begin{bmatrix} \dot{\theta}_1 \\ \dot{\theta}_2 \\ \vdots \\ \dot{\theta}_n \end{bmatrix}$$

$x(t) = f(\theta(t))$

- Let $J_i(\theta)$ be the ith column of J, then $\dot{x} = J_1(\theta)\dot{\theta}_1 + \cdots + J_n(\theta)\dot{\theta}_n$
  - $J_i(\theta)$ is the velocity of x due to $\dot{\theta}_i$ (while $\dot{\theta}_j = 0$ for all $j \neq i$)

Velocity Kinematics Problem

- In the previous lecture, we studied the forward kinematics problem, that obtains the mapping from joint angles to {b} frame configuration:

$$\theta = (\theta_1, \ldots, \theta_n)^T \quad \mapsto \quad T_{sb}(\theta)$$

- In this lecture, we study the velocity kinematics problem, namely, deriving the relation that maps velocities of joint variables $\dot{\theta}$ to the "velocity" of the end-effector frame
  - Note: we are interested in relating $\dot{\theta}$ to the velocity of the entire body frame (not just a point on the body)
  - One may intend to write $\dot{T}(\theta) = J(\theta)\dot{\theta}$. However, $T \in SE(4)$ and its derivative is not a good way to represent velocity of the body.
  - Two approaches: (1) Analytical Jacobian: using a minimum set of coordinate $x \in \mathbb{R}^6$ of the frame configuration and then take derivative; (2) Geometric Jacobian: directly relate $\dot{\theta}$ to the spacial/body twist $\mathcal{V}$

Analytical vs. Geometric Jacobian

- A straightforward way to characterize the velocity kinematics is through the **Analytical Jacobian**

- Express the configuration of $\{\mathrm{b}\}$ using a minimum set of coordinates x. For example:
  - (x_1, x_2, x_3): Cartesian coordinates or spherical coordinate of the origin
  - (x_4, x_5, x_6): Euler angles or exponential coordinate of the orientation

- Write down the forward kinematics using the minimum set of coordinate x: $x = f(\theta)$

- Analytical Jacobian can then be computed as $J_a(\theta) = \left[\frac{\partial f}{\partial \theta}(\theta)\right]$

- The analytical Jacobian J_a depends on the local coordinates system of $SE(3)$

- See Textbook 5.1.5 for more details

Analytical vs. Geometric Jacobian

- **Geometric Jacobian** directly finds relation between joint velocities and end-effector twist:

$$\mathcal{V} = \begin{bmatrix} \omega \\ v \end{bmatrix} = J(\theta)\dot{\theta}, \quad \text{where } J(\theta) \in \mathbb{R}^{6\times n}$$

- Note: $\mathcal{V} = (\omega, v)$ is NOT a derivative of any position variable, i.e. $\mathcal{V} \neq \frac{dx}{dt}$ (regardless what representation x is used) because the angular velocity is not the derivative of any time varying quantity.

- Analytical Jacobian J_a destroys the natural geometric structure of the rigid body motion;

- Geometric Jacobian can be used to derive analytical Jacobian.

Outline

- Introduction
- Space and Body Jacobians
- Kinematic Singularity

Geometric Jacobian in Space Form

- Given the forward kinematics: $T_{sb}(\theta_1, \ldots, \theta_n) = e^{[\mathcal{S}_1]\theta_1} \cdots e^{[\mathcal{S}_n]\theta_n} M$

- Let $\mathcal{V}_s = (\omega_s, v_s)$ be the spacial twist, we aim to find $J_s(\theta)$ such that

$$\mathcal{V}_s = \underline{J_s(\theta)}\dot{\theta} = J_{s1}(\theta)\dot{\theta}_1 + \cdots + J_{sn}(\theta)\dot{\theta}_n$$

$$\begin{bmatrix} J_{s1} & J_{s2} & \cdots & J_{sn} \end{bmatrix} \begin{bmatrix} \dot{\theta}_1 \\ \vdots \\ \dot{\theta}_n \end{bmatrix}$$

- The ith column J_{si} is the velocity (twist) of the body frame due to only the ith joint motion $\dot{\theta}_i$

- In other words, $J_{si}(\theta)$ is the *spatial twist* when the robot is rotating about $\mathcal{S}_i$ at unit speed $\dot{\theta}_i = 1$ while all other joints do not move (i.e. $\dot{\theta}_j = 0$ for $j \neq i$).

Derivation of Space Jacobian

$(e^{at})' = a e^{at}$

- Given any screw axis $\mathcal{S}$, we have $\frac{d}{d\theta_i} e^{[\mathcal{S}]\theta_i} = [\mathcal{S}] e^{[\mathcal{S}]\theta_i}$ $\boxed{\frac{d}{dt}(e^{At}) = A e^{At}}$

- For simplicity, denote $T_{s,i-} = e^{[\mathcal{S}_1]\theta_1} \cdots e^{[\mathcal{S}_{i-1}]\theta_{i-1}}$, $i = 2, \ldots, n$. Let $T = T_{sb}(\theta)$

- We have $[\mathcal{V}_s] = \dot{T} T^{-1} = \left(\frac{\partial T}{\partial \theta_1} \dot{\theta}_1 + \cdots + \frac{\partial T}{\partial \theta_i} \dot{\theta}_i + \cdots + \frac{\partial T}{\partial \theta_n} \dot{\theta}_n \right) T^{-1}$

- Let $\dot{\theta}_i = 1$ and $\dot{\theta}_j = 0$ for $j \neq i$ $\Rightarrow$ $[J_{si}(\theta)] = \frac{\partial T}{\partial \theta_i} T^{-1} = \overbrace{[\mathrm{Ad}_{T_{s,i-}}]\, \mathcal{S}_i}^{J_{si}}$

Let $i \geq 2$: $[\underbrace{J_{si}(\theta)}_{\text{twist}}] = \Big(\underbrace{e^{[S_1]\theta_1} \cdots e^{[S_{i-1}]\theta_{i-1}}}_{T_{s,i-}} [S_i] e^{[S_i]\theta_i} e^{[S_{i+1}]\theta_{i+1}} \cdots e^{[S_n]\theta_n} M\Big) \Big(M^{-1} (e^{[S_n]\theta_n})^{-1} \cdots (e^{[S_1]\theta_1})^{-1}\Big)$

$= (T_{s,i-})[S_i](T_{s,i-})^{-1} \Rightarrow J_{si}(\theta) = (\mathrm{Ad}_{T_{s,i-}}) S_i$

When $i=1$ $\Rightarrow$ $[J_{s1}(\theta)] = \left(\frac{\partial T}{\partial \theta_1}\right) T^{-1} = [S_1] T T^{-1} = [S_1]$

$J_{s1}(\theta) = S_1$

Summary of Space Jacobian

- Given the forward kinematics: $T(\theta) = e^{[\mathcal{S}_1]\theta_1} \cdots e^{[\mathcal{S}_n]\theta_n} M$
- **Space Jacobian:** $J_s(\theta) \in \mathbb{R}^{6\times n}$ relates joint rate vector $\dot{\theta} \in \mathbb{R}^n$ to the spatial twist $\mathcal{V}_s$ via $\mathcal{V}_s = J_s(\theta)\dot{\theta}$. For $i \geq 2$, the ith column of J_s is

$$J_{si}(\theta) = \left[Ad_{T_{s,i-}}\right] \mathcal{S}_i, \text{ where } T_{s,i-} = e^{[\mathcal{S}_1]\theta_1} \cdots e^{[\mathcal{S}_{i-1}]\theta_{i-1}}$$

  and the first column is $J_{s1} = \mathcal{S}_1$.

- **Procedure:** Suppose the current joint position is $\theta = (\theta_1, \ldots, \theta_n)$:
  - $i = 1$: find the screw axis $\mathcal{S}_1 = (\omega_{s1}, v_{s1})$ when robot is at home position $\Rightarrow J_{s1} = \mathcal{S}_1$
  - $i = 2$: find the screw axis $\mathcal{S}_2(\theta) = (\omega_{s2}, v_{s2})$ after moving joint 1 from zero position to θ_1. $\Rightarrow J_{s2}(\theta) = \mathcal{S}_2(\theta) = \left[Ad_{e^{[S_1]\theta_1}}\right] S_2$
  - $i = 3$: find the screw axis $\mathcal{S}_3(\theta) = (\omega_{s3}, v_{s3})$ after moving the first 2 joints from zero position to the θ_1 and θ_2. $\Rightarrow J_{s3}(\theta) = \mathcal{S}_3(\theta) = \left[Ad_{\underbrace{e^{[S_1]\theta_1} e^{[S_2]\theta_2}}}\right] S_3$
  - $\vdots$

Space Jacobian Example

- $i=1$: $S_1=(\omega_{s1}, v_{s1})$, $\omega_{s1}=(0,0,1)$, $q_1=(0,0,0) \Rightarrow v_{s1}=\begin{bmatrix}0\\0\\0\end{bmatrix}$

$$J_{s1}(\theta)=\begin{bmatrix}0\\0\\1\\0\\0\\0\end{bmatrix}$$

$c_1=\cos(\theta_1)$ $s_1=\sin(\theta_1)$

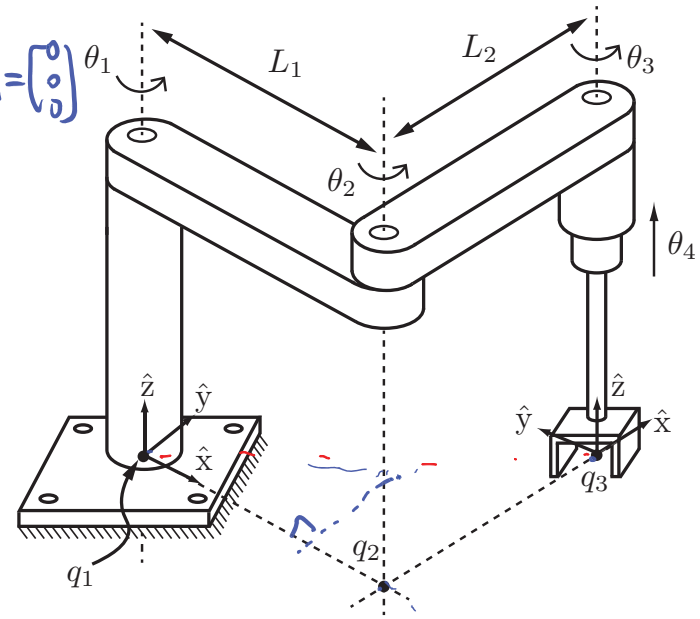

- $i=2$: $S_2=(\omega_{s1}, v_{s2})$, $\omega_{s2}=(0,0,1)$, $q_2=(L_1c_1, L_1s_1, 0)$

$$v_{s2}=-\omega_{s2}\times q_2=(L_1s_1, -L_1c_1, 0) = e^{[S_1]\theta_1} q_2^0$$

we can also compute q_3 by geometry.

- $i=3$: joint angles for axes 1 and 2 : θ_1 and θ_2

$$\omega_{s3}=(0,0,1), \quad q_3=e^{[S_1]\theta_1}e^{[S_2]\theta_2}\begin{bmatrix}L_1+L_2\\0\\0\end{bmatrix} = \text{some new vector.}$$

- $i=4$: $S_4=(\omega_{s4}, v_{s4})$, pure translation $\omega_{s4}=(0,0,0)$, $v_{s4}=(0,0,1)$

$$J_{s4}=\begin{bmatrix}0\\0\\0\\0\\0\\1\end{bmatrix}$$

By geometry: $q_3=(L_1c_1+L_2c_{12}, L_1s_1+Ls_{12}, 0)$

$s_{12}=\sin(\theta_1+\theta_2)$

$c_{12}=\cos(\theta_1+\theta_2)$

$\Rightarrow v_{s3}=-\omega_{s3}\times q_3$

Space Jacobian Example (Continued)

Jacobian:

$$J_s(\theta) = \begin{bmatrix} 0 & 0 & 0 & 0 \\ 0 & 0 & 0 & 0 \\ 1 & 1 & 1 & 0 \\ 0 & L_1 s_1 & L_1 c_1 + L_2 c_{12} & 0 \\ 0 & -L_1 c_1 & L_1 s_1 + L_2 s_{12} & 0 \\ 0 & 0 & 0 & 1 \end{bmatrix}$$

Body Jacobian

- Recall that $\mathcal{V}_b$ is the rigid body velocity expressed in body frame.

- By change of frame for twist, we know

$$\mathcal{V}_b = [Ad_{T_{bs}}]\,\mathcal{V}_s \quad \text{or equivalently} \quad [\mathcal{V}_b] = T_{bs}[\mathcal{V}_s]T_{bs}^{-1} = T_{sb}^{-1}\dot{T}_{sb}$$

$(S' = [Ad_T]S)$

- **Body Jacobian** J_b relates joint rates $\dot{\theta}$ to $\mathcal{V}_b$

$$\mathcal{V}_b = J_b(\theta)\dot{\theta} = \begin{bmatrix} J_{b1}(\theta) & \cdots & J_{bn}(\theta) \end{bmatrix} \begin{bmatrix} \dot{\theta}_1 \\ \vdots \\ \dot{\theta}_n \end{bmatrix}$$

Derivation of Body Jacobian

- Use Body form PoE kinematics formula: $T(\theta) = Me^{[\mathcal{B}_1]\theta_1} \cdots e^{[\mathcal{B}_n]\theta_n}$
- For simplicity, denote $T_{b,i+} = e^{[\mathcal{B}_{i+1}]\theta_{i+1}} \cdots e^{[\mathcal{B}_n]\theta_n}$, for $i = 1, \ldots, n-1$
- $[\mathcal{V}_b] = T^{-1}\dot{T} = T^{-1}\left(\frac{\partial T}{\partial \theta_1}\dot{\theta}_1 \cdots + \frac{\partial T}{\partial \theta_n}\dot{\theta}_n\right)$
- Let $\dot{\theta}_i = 1$ and $\dot{\theta}_j = 0$ for $j \neq i$,

$$
\begin{aligned}
[J_{b,i}] &= T^{-1}\frac{\partial T}{\partial \theta_i} \\
&= \left(e^{-[\mathcal{B}_n]\theta_n} \cdots e^{-[\mathcal{B}_1]\theta_1}\right)\left(e^{[\mathcal{B}_1]\theta_1} \cdots e^{[\mathcal{B}_{i-1}]\theta_{i-1}}[\mathcal{B}_i]e^{[\mathcal{B}_i]\theta_i} \cdots e^{[\mathcal{B}_n]\theta_n}\right) \\
&= \left(T^b_{i+}\right)^{-1}[\mathcal{B}_i]T^b_{i+}
\end{aligned}
$$

- Therefore,

$$
J_{b,i} = \left[Ad_{T^{-1}_{b,i+}}\right]\mathcal{B}_i
$$

Summary of Body Jacobian

- Given the forward kinematics: $T(\theta) = M e^{[\mathcal{B}_1]\theta_1} \dots e^{[\mathcal{B}_n]\theta_n}$

- **Body Jacobian:** $J_b(\theta) \in \mathbb{R}^{6\times n}$ relates joint rate vector $\dot{\theta} \in \mathbb{R}^n$ to the body twist $\mathcal{V}_b$ via $\mathcal{V}_b = J_b(\theta)\dot{\theta}$. For $i = n-1, \dots, 1$, the ith column of J_b is

$$J_{bi}(\theta) = \left[Ad_{T_{b,i+}^{-1}}\right] \overset{\mathcal{B}_i}{\cancel{\mathcal{S}_i}}, \text{ where } T_{b,i+} = e^{[\mathcal{S}_{i+1}]\theta_{i+1}} \dots e^{[\mathcal{S}_n]\theta_n}$$

and the last column is $J_{bn} = \mathcal{B}_n$.

Relation Between Spatial and Body Jacobian

- Recall that: $\mathcal{V}_b = [\mathrm{Ad}_{T_{bs}}]\,\mathcal{V}_s$ and $\mathcal{V}_s = [\mathrm{Ad}_{T_{sb}}]\,\mathcal{V}_b$

- Body and spacial twists represent the velocity of the end-effector frame in fixed and body frame

- The velocity may be caused by one or multiple joint motions. We know the ith column J_{si} (or J_{bi}) is the spacial twist (or body twist) when $\dot{\theta}_i = 1$ and $\dot{\theta}_j = 0, j \neq i$

- Therefore, we have $J_{si} = [\mathrm{Ad}_{T_{sb}}]\,J_{bi}$ and $J_{bi} = [\mathrm{Ad}_{T_{bs}}]\,J_{si}$. Putting all the columns together leads to

$$J_s(\theta) = \underbrace{[\mathrm{Ad}_{T_{sb}}]}\,J_b(\theta), \text{ and } J_b(\theta) = [\mathrm{Ad}_{T_{bs}}]\,J_s(\theta)$$

$[6 \times n] = [6 \times 6]\,[6 \times n]$

- Detailed derivation can be found in the textbook.

Outline

- Introduction
- Space and Body Jacobians
- Kinematic Singularity

Kinematic Singularity

- Roughly speaking, **kinematic singularity (or simply singularity)** refers to a posture at which the robot's end-effector loses the ability to move instantaneously in one or more directions.

- Mathematically, a singular posture is one in which the Jacobian ($J_s(\theta)$ or $J_b(\theta)$) fails to be of maximal rank

$$\mathcal{V}_b = J_b(\theta) = [J_{b_1}(\theta) \quad J_{b_2}(\theta) \quad \cdots \quad J_{b_n}(\theta)] \begin{bmatrix} \dot{\theta}_1 \\ \dot{\theta}_2 \\ \vdots \\ \dot{\theta}_n \end{bmatrix}$$

Singularity means some columns are dependent of each other

e.g. $J_{b_3}(\theta) = 2J_{b_2}(\theta)$ or $J_{b_3}(\theta) = J_{b_1}(\theta) + 3J_{b_2}(\theta)$

$\text{rank}(J_b(\theta)) < \min\{6, n\}$

$\Uparrow$

singularity

- Singularity is independent of the choice of space or body Jacobian

$$\text{rank} J_s(\theta) = \text{rank} J_b(\theta)$$

nonsingular ✓

this is because $\underbrace{J_s(\theta)}_{6\times n} = \underbrace{[Ad_{T_{sb}}]}_{6\times 6} \underbrace{J_b(\theta)}_{6\times n}$

Singularity Example : read book chap 5 for more examples

- two collinear revolute joints:

  ① $w_i = \pm w_{i+1}$; ② $w_i \times (q_i - q_{i+1}) = w_{i+1} \times (q_i - q_{i+1}) = 0$

  assume $w_i = w_{i+1} = \hat{w}$

- $J_s = [J_{s1} \quad J_{s2} \quad \cdots \quad J_{si} \quad J_{si+1} \quad \cdots \quad J_{sn}]$

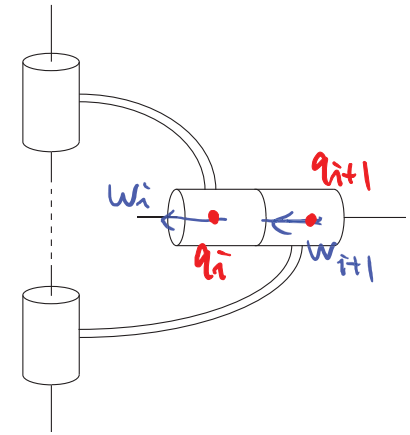

Two collinear revolute joint

Screw axis of joint i (at home) : $S_i = (w_i, v_i)$

$i+1$ (at home) : $S_{i+1} = (w_{i+1}, v_{i+1})$

. . . . . i (at configuration θ) : is $J_{si} = \begin{bmatrix} w_{si} \\ v_{si} \end{bmatrix}$

$i+1$ (at . . . . . θ) : $J_{si+1} = \begin{bmatrix} w_{si+1} \\ v_{s,i+1} \end{bmatrix}$

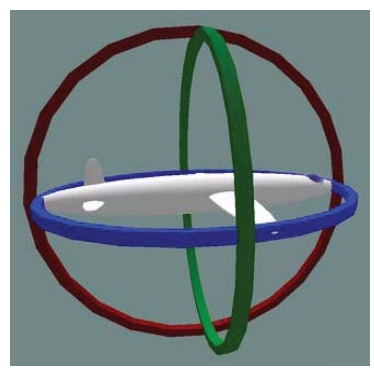

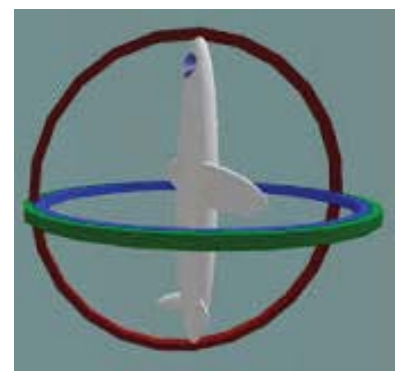

- We can see : $S_i = \begin{bmatrix} w_i \\ -w_i \times q_i \end{bmatrix} = \begin{bmatrix} \hat{w} \\ -\hat{w} \times q_i \end{bmatrix}$,

$$S_{i+1} = \begin{bmatrix} \hat{w} \\ -\hat{w} \times q_{i+1} \end{bmatrix} \Rightarrow S_i - S_{i+1} = \begin{bmatrix} 0 \\ -\hat{w} \times (q_i - q_{i+1}) \end{bmatrix} = \begin{bmatrix} 0 \\ 0 \end{bmatrix}$$

$\Rightarrow$ at $\theta =$ "0" home $\Rightarrow J_{si} = S_i = J_{si+1} = S_{i+1}$

More Discussions

- pick arbitrary θ : $J_{S_i} = [Ad_{T_{s,i-}}] S_i$, $J_{S_{i+1}} = [Ad_{(T_{s,i-} \cdot e^{[S_i]\theta_i})}] S_{i+1}$

$$= \underbrace{[Ad_{T_{s,i-}}]} \boxed{[Ad_{e^{[S_i]\theta_i}}] S_{i+1}}$$

"$e^{[S_i]\theta_i} q_{i+1} = q_{i+1}$" . we can see $[Ad_{e^{[S_i]\theta_i}}] S_{i+1} = S_{i+1}$

$$\Rightarrow \quad J_{S_{i+1}} = \underbrace{[Ad_{T_{s,i-}}]} S_{i+1}$$

since $S_i = S_{i+1}$ $\Rightarrow$ $J_{S_i} = J_{S_{i+1}}$