CLARKSBURG PREMIUM OUTLETS®

A SIMON CENTER

Food Tenant Info

Updated April 7, 2016

CLARKSBURG PREMIUM OUTLETS®
A SIMON CENTER

Handbook Updates Log

CLARKSBURG PREMIUM OUTLETS®
A SIMON CENTER

Table of Contents

Tenant Manager
Danny Herrmann
DHerrmann@simon.com
973.885.8904

- **PLAN SUBMISSION REQUIREMENTS FOR LL APPROVAL**
  - Food Court Tenant
  - Other Food Tenants (outside the food court)
- **LEED CONSTRUCTION GUIDELINES**
- **FOOD TENANT DESIGN REQUIREMENTS**
- **REQUIRED ROOFTOP GREASE GUARDS**
  - Grease Guard Rooftop Defense System – OPTION 1
  - Grease Gutter System – OPTION 2
- **MONTGOMERY COUNTY HEALTH & HUMAN SERVICES**
  - Plan Review Guide
  - Plan Review Application
  - Food Service Facility License Application
  - Plans Review guideline
  - HACCP Plan Guidelines
  - Health Dept General Notes
- **FOOD COURT LLWL – Only for suites 850, 851, 852, 853 & 854**
  - **For all other spaces please see the LLWL in the handbook**
- **FOOD COURT EXHIBITS**

LANDLORD WILL COMPLETE A PUNCHLIST AT SUBSTANTIAL COMPLETION THAT MUST BE CORRECTED BEFORE GC LEAVES

CLARKSBURG PREMIUM OUTLETS®
A SIMON CENTER

Plan Submission Requirements for LL Approval

(Food Court Tenants)

Please provide Landlord with the following information for LL review:

Food Court Tenants:

- One (1) full sets of 24” x 36” plans
- At minimum, the following sheets are required for LL review:
    - **Title Sheet** – To include at MINIMUM:
        - Name & Address of project
        - Location Map
        - Contact name, number AND Email address for Owner/Tenant
        - Contact name, number AND Email address for Tenant Architect
        - Drawing index with revision dates
        - Building codes
    - **Info Page** – This can be found on Buzzsaw and must be included directly behind the cover page
    - **Floor plan**
    - **Elevations**
    - **Reflected ceiling plan**
    - **Mechanical**
    - **Electrical**
    - **Plumbing**
    - **Structural** – for new roof openings and added rooftop equipment
- CAD file(s) containing the floor plan and reflected ceiling plan
- A full set of plans in PDF format.
- 1 Sample board with actual samples (Pictures do not count)

CLARKSBURG PREMIUM OUTLETS®
A SIMON CENTER

Plan Submission Requirements for LL Approval

(Food Tenants Outside the Food Court)

Please provide Landlord with the following information for LL review:

Food Court Tenants:

- One (1) full sets of 11” x 17” plans
- At minimum, the following sheets are required for LL review:
    - **Title Sheet** – To include at MINIMUM:
        - Name & Address of project
        - Location Map
        - Contact name, number AND Email address for Owner/Tenant
        - Contact name, number AND Email address for Tenant Architect
        - Drawing index with revision dates
        - Building codes
    - **Info Page** – This can be found on Buzzsaw and must be included directly behind the cover page
    - **Floor plan**
    - **Elevations**
    - **Reflected ceiling plan**
    - **Mechanical**
    - **Electrical**
    - **Plumbing**
    - **Structural** – for new roof openings and added rooftop equipment
- CAD file(s) containing the floor plan and reflected ceiling plan
- A full set of plans in PDF format.

CLARKSBURG PREMIUM OUTLETS®
A SIMON CENTER

LEED Construction Guidelines

(updated 7.6.2015)

Tenant hereby acknowledges that the Premises are located in a building which is LEED certified. In order to maintain such certification, Tenant shall comply with the following requirements:

1. Water Efficiency: The Building plumbing fixtures installed by the Landlord reduce water usage and it is not expected that tenants will add any additional plumbing fixtures or modify the plumbing fixtures installed by the Landlord within their space. The following criteria apply if tenant adds or replaces any of the plumbing fixtures within their premises;

a. All water closets must have a maximum flow rate of 1.28 gallons per flush.
b. All urinals must be waterless.
c. All lavatory faucets must be metered or auto-controlled with a maximum flow rate of 0.1 gallons per cycle, based on a 12-second duration cycle.
d. All kitchen sink fixtures must have a maximum flow rate of 2.0 gallons per minute.

(*WE (Water Efficiency) Prerequisite 1: Water Use Reduction – 20% Reduction and Credit 3: Water Use Reduction – By complying with the requirements above, any optional tenant improvements to plumbing fixtures installed by the Landlord will maintain the water usage reduction achieved by the Building per WEp1 and WEc3 of the LEED Reference Guide for Green Building Design and Construction, 2009 Edition.)*

2. Lighting Performance; The following criteria apply to all tenant installed light fixtures within the leased premises;

a. The maximum lighting power density to be installed by the tenant within the tenant retail spaces shall not exceed 1.5 watts per square foot. This value shall include all of the lighting system components (lamps, ballasts, task lighting, etc.).

(EA (Energy and Atmosphere) Prerequisite 2: Minimum Energy Performance and Credit 1: Optimize Energy Performance – By complying with the requirements above, the tenant improvements shall contribute to the improvement in building performance rating as compared with the baseline building performance rating per EAc1, Option 1, of the LEED Reference Guide for Green Building Design and Construction, 2009 Edition)

3. Refrigerant Management; The Building heating, ventilating, air conditioning, and refrigeration (HVAC&R) systems installed by the Landlord for all tenant spaces do not use chlorofluorocarbon (CFC) based refrigerants. Any tenant modifications, repair, or additions to the building HVAC&R systems shall not use CFC based refrigerants. (*EA Prerequisite 3: Fundamental Refrigerant Management per EAp3 of the LEED Reference Guide for Green Building Design and Construction, 2009 Edition)*

4. Indoor Air Quality; The Building HVAC systems installed by the Landlord for all tenant spaces demonstrate compliance with the minimum requirements of Sections 4 through 7 of ASHRAE Standard 62.1-2007, Ventilation for Acceptable Indoor Air Quality (with errata, but without addenda).Any tenant modifications or additions to the shell HVAC systems shall also demonstrate compliance with this standard.
(EQp1 of the LEED Reference Guide for Green Building Design and Construction, 2009 Edition.)

5. Environmental Tobacco Smoke Control; Tenant shall prohibit smoking within 25 feet of entries, outdoor air intakes, and operable windows. Landlord installed signage at all regularly used exterior tenant entries will be provided to comply with this requirement.
(EQp2 of the LEED Reference Guide for Green Building Design and Construction, 2009 Edition.)

CLARKSBURG PREMIUM OUTLETS®
A SIMON CENTER

Food Tenant Design Requirements

Below is the minumum design requirements that must be used by ALL Food and Food Court Tenants for all kitchen prep areas.

This requirement is to prevent any mositure or dampness penetrating the demising wall(s) that can lead to damage to the food space and/or adjoining spaces.

Demising and/or concrete walls:

1. Demising walls must be moisture resistant gypsum board w/ Sporgard™ (National Gypsum) on metal studs. Other wall options acceptable by landlord would be Hardibacker prior to installing wall finishes or Ultracode drywall, by USG.

2. Install water proof membrane a minumum of 12” above floor.

3. FRP applied to all walls to a minumum height or 48” above wall base tile, and caulked with a silicone sealant.

4. Metal or PVC corner guard must be applied to all corners and caulked with a silicone sealant.

Flooring area:

1. Floor tile and flooring base installed must be sealed. This application should be re-applied semi-annually.

2. Floor drains must be installed in any food preparation area that require cleaning methods of hosing or washing walls. It is the tenant responsibility to make certain that all flooring is sloped for proper drainage to the floor drain(s).

Tile/Grout: Must have Durock and /or equal applied to studs.

Exhaust:

1. Tenant is required to use a GREASE EXHAUST ROOF PROTECTOR model: TBD by exhaust size - G2 Grease Guard as manufactured by Rooftop Defense Systems. www.rooftopsolutions.com.

Please make sure you have reviewed the plans on Buzzsaw as the Landlord is constructing a knee wall at the front of your space. This knee wall CANNOT be removed/altered as it’s designed to have your front cabinets butt up against it and countertop installed over it.

CLARKSBURG PREMIUM OUTLETS®
A SIMON CENTER

Required Rooftop Grease Guards
(Option 1)

Grease Guard® Rooftop Defense System® / Rooftop Containment Services
The **Grease Guard® Rooftop Defense System®** is the industry leading solution in rooftop grease containment. For every situation and configuration Grease Guard has a solution to accomodate your operation while saving continually saving you money throughout the life of the product. Rooftop Solutions is the proud Official Service Provider of the **Grease Guard® Rooftop Defense System®** See below at the Grease Guard services Rooftop Solutions has to offer:

Grease Guard® Full Service Program – Grease Guard® maintenance is a required and vital part to Grease Guard® ownership. This service will ensure the Grease Guard® continues to perform at maximum capacity for the life of the product. Our professional Service Technicians will visit your location on a set frequency to ensure all parts of the system meet our strict grease absorption quality standards, and best of all, all of our technicians are employees of Rooftop Solutions. We do not utilize any sub contractors to perform any of our work. In this way we can ensure the work will be completed according to your scope of work with our 20+ years of experience, nationwide! Your **Grease Guard® Full Service Program** can include**:**

- **Grease Guard® deficiency and missing parts full system check** with managment reporting and replacement if applicable.
- **Replacement and or rotation of all saturated media** with new material to increase system efficiency and lower cost.
- Our **Rooftop Grease Free Promise** ensures that if we configured, installed, and maintain the **Grease Guard®** we will handle the grease issues in and around the unit(s) and/or do what it takes to ensure you are protected.

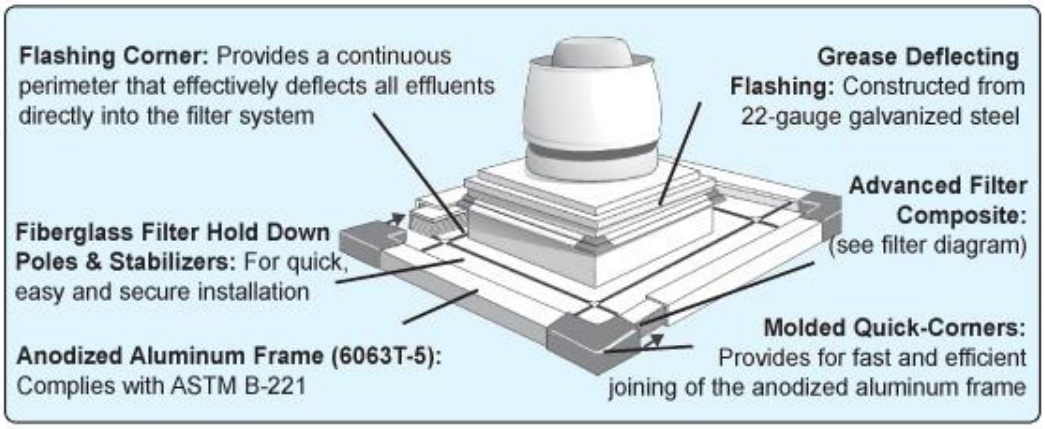

CLARKSBURG
PREMIUM OUTLETS®
A SIMON CENTER

Damage Control:

ROOFTOP INSPECTION

CONDITION REPORT:

- Severe Roof Damage
- Voided Roof Warranty
- Serious Fire Hazard (NFPA Violations)
- Health Department Concerns
- Safety Liability Issues (OSHA Violations)
- Storm Water Pollution (EPA Violations)

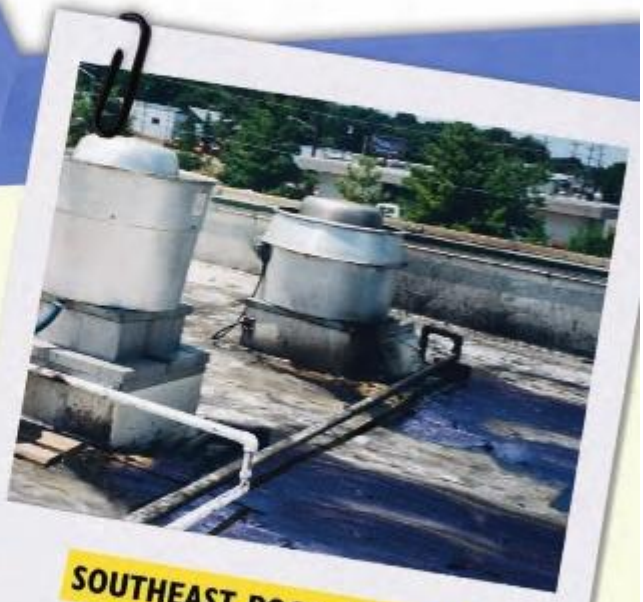

SOUTHEAST ROOF SECTION

RECOMMENDATIONS:

G2® Grease Guard®
Rooftop Defense Systems®

You Have A Problem...
We Have A Solution.

G2 GREASE GUARD
Rooftop Defense Systems

We Help You Comply

CLARKSBURG
PREMIUM OUTLETS®
A SIMON CENTER

Foodservice Management Concerns

Grease Laden Rooftop

Unnecessary Roof Repair

Uncontrollable Fire Hazards

As a food service provider your facility may be subject to unnecessary liabilities, rooftop safety hazards and code violations. Grease and oil emitted onto your rooftop by your kitchen exhaust fans result in unnecessary roof leaks, costly roof repairs, unsafe work areas and even worse— **FIRE.**

Not only are grease and oil the source of roof deterioration, they are also extremely flammable. Over **98%** of all restaurant fires are due in part to kitchen exhaust grease and oil. A spark can travel through the exhaust system to the roof surface resulting in extensive damage to your property and investment.

Rooftop Grease Resolution

The NEW **G2® Grease Guard® Rooftop Defense Systems®** are so effective at containing grease and oils from rooftop exhaust systems that **Underwriters Laboratories Inc.** has **Listed** it for effectiveness and safety. This is the most oil absorbent, noncombustible, rainproof, structurally sound, closed, Listed, grease containment system on the market today. **We guarantee it!**

UL LISTED

Fiberglass Filter Hold Down Poles & Stabilizers— for quick, easy and secure installation

Top Pre-Filter— a pass-thru, fire-resistant, self-extinguishing filter constructed from an open cross section polymer
(See side diagram of filter)

Fire Shield— A fire-proof barrier that protects the roof & building from any potential exhaust system fire hazards

CLARKSBURG
PREMIUM OUTLETS®
A SIMON CENTER

We Help You Comply

National Fire Protection Association

***NFPA 96 Standard for Ventilation Control and Fire Protection of Commercial Cooking Operations 1998 Edition states: 4-8.2.1 Rooftop Termination shall be arranged with or provided with the following…**

(c) "The ability to drain grease out of any traps or low points formed in the fan or duct near the termination of the system into a **collection container that is noncombustible, closed, rainproof, structurally sound for the service to which it is applied, and will not sustain combustion.** A grease collection device that is applied to exhaust system shall not inhibit the performance of any fan.

Exceptions: Grease containers that are evaluated for equivalency with the preceding requirements and ***listed*** *as such.*

*Reprinted with permission from NFPA 96 Standard for Ventilation Control and Fire Protection of Commercial Cooking Operations ©1998, National Fire Protection Association, Quincy, MA 02269. The reprinted material is not the complete and official position of the National Fire Protection Association, on the referenced subject which is represented only by the standard in its entirety.

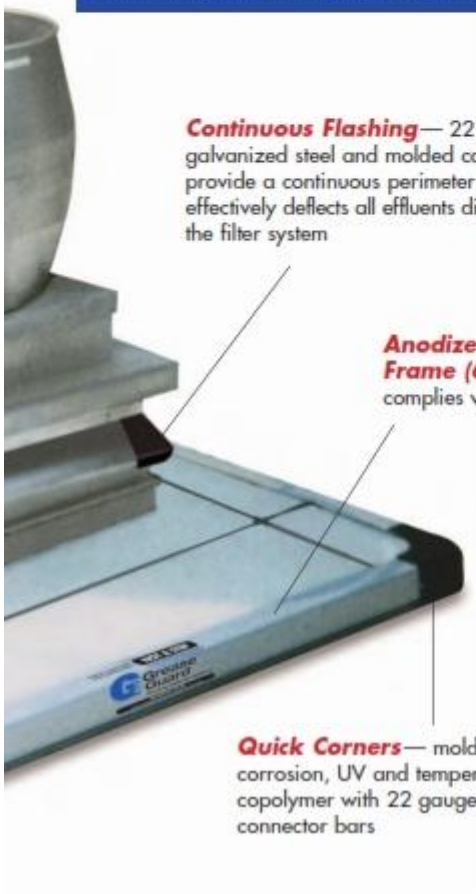

Continuous Flashing— 22 gauge galvanized steel and molded corners provide a continuous perimeter that effectively deflects all effluents directly into the filter system

Anodized Aluminum Frame (6063T-5)— complies with ASTM B-221

Quick Corners— molded from UL Listed, corrosion, UV and temperature resistant copolymer with 22 gauge galvanized steel connector bars

Diagram Of Filter

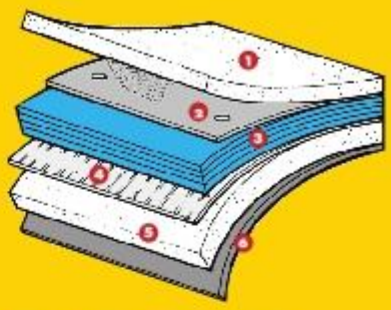

1. ***Top Pre-Filter***— a pass-thru, noncombustible, self-extinguishing filter constructed from an open cross section polymer.
2. ***Transfer Layer***— constructed from polyolefin fiber. Designed for quick transfer of oil based fluids to the absorption layers, while repelling rainwater. UV stability protects the absorption layers from damaging sun rays.
3. ***Advanced Filter Composite®***— constructed from an engineered open cell polyolefin fabric. Over 50 layers of absorbent microfibers wick and contain oil based fluids, while repelling rainwater. Absorption capacity is up to 39 fluid ounces per square foot.
4. ***Barrier Layer***— constructed from a closed cell polymeric blend that provides a leak proof barrier.
5. ***Bottom Layer***— an airflow layer constructed from an open cross section polymer. This layer supports the absorption and security layers while allowing air to circulate throughout the entire filter system.
6. ***Fire Shield***— A fire-proof barrier that protects the roof & building from any potential exhaust system fire hazards.

G2 GREASE GUARD®
Rooftop Defense Systems®

CLARKSBURG
PREMIUM OUTLETS®
A SIMON CENTER

Retrofit and Rooftop Cleanup

Existing grease and oil problems are no problem! Our retrofit program coordinates all aspects of the retrofit process including the following:

An initial rooftop survey is scheduled to determine your specific needs

- Photos and measurements of each fan application are taken to determine needs and correct sizing

Formal proposals are submitted for approval

- Once approved, the retrofit process begins

Scheduling of rooftop grease clean up and unit installations

- Removal of grease-laden debris from rooftop to bring conditions back to a clean and fire safe level.
- Installation of proper size G2® Grease Guard® units to protect your roofing investment
- All work is completed in accordance with all local and national fire and building codes.

National Account Maintenance Program

G2® Grease Guard® maintenance programs are custom tailored to meet the needs of both your organization and the individual needs of each of your stores. Your concept's style of cooking, store volume, and the number of G2® Grease Guard® units you have at each facility will determine the type and frequency of the maintenance program we design for you. You can rest assured that with the G2® Grease Guard® National Account Maintenance Program in place, your facilities will be protected. We guarantee it.

G2 GREASE GUARD®
Rooftop Defense Systems®

For Information Call Toll Free:
800.913.7034

Made in the U.S.A.
U.S. Patent No's 5,196,040 and 5,318,607. Other Patents Pending.

www.greaseguard.com

CLARKSBURG PREMIUM OUTLETS®
A SIMON CENTER

Required Rooftop Grease Guards
(Option 2)

GREASE GUTTER
ROOFTOP GREASE PROTECTION SYSTEMS

THE ORIGINAL
GREASE GUTTER

The Grease Gutter system is designed for use in low to moderate grease discharge applications. The Grease Gutter's one piece absorbent pads holds and contains grease while letting water pass freely out of the system.

The original Grease Gutter system has many advantages over other roof top grease containment products. Our original system is only four inches wide and uses a single filter pad. Engineered for tight installation situations where clearances may be a issue. Constructed of the most durable V-O polymers, it is able to withstand harsh weather conditions. For years of flawless roof protection where four sided protection is needed in lower volume discharge fans – such as rotisserie, steam, and other low grease volume fans.

CLARKSBURG
PREMIUM OUTLETS®
A SIMON CENTER

OMNI Containment Systems, L.L.C.

Innovations In Grease Containment

617 Church Road
Elgin IL 60123
sales@omnicontainment.com
877-2-CONTAIN
(877-226-6824)
www.omnicontainment.com

GREASE GUTTER

ROOFTOP GREASE PROTECTION SYSTEMS

US PAT 06468323, US PAT 6676723 B2

Begin Defending Your Rooftop From Grease With

Off The Roof® Protection

Stop Using Old Technology That Hides Grease Under Layers of Filters That Sit On Your Roof

Until Grease Gutter, rooftop grease control products were too difficult to service and proper maintenance was discouraged. Grease Gutter is your **SIMPLE SOLUTION**!

Use **The High Capacity Grease Gutter 360°** duct design for use in high grease discharge applications. And **The Grease Gutter Sidekick** Single sided design for applications where the other Grease Gutter units won't fit.

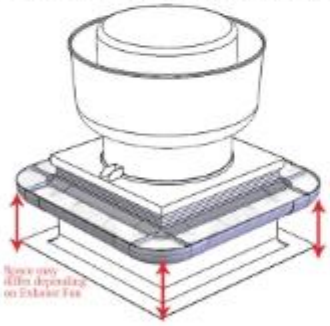

OMNI EARTH FRIENDLY PRODUCT

◦ Easy to replace one piece replacement absorbant* ◦ Mounts up *Off The Roof* to avoid hidden contact damage ◦ ◦ Compact design doesn't interfere with service providers. ◦ Economical to purchase and maintain ◦ ◦ Constructed with UL approved materials ◦

◦ Made in the USA with UL Approved Materials ◦

* PILL-MORE GREASE BOOM GREASE GUTTER INSERT — Easy to work with Grease Gutter Absorbant. 100% grease saturation, so no wasted material. UV Resistant and 100% Biodegradable.

Try Our Other Great Grease Containment Products, All MADE IN THE U.S.A.

GREASE GUTTER · GREASE AWAY · SUPER HINGE · THE QUICK-FIT EASY CLEAN SUPER HINGE · ROOF Guardian · LANE GUARD

Access Armor · ECONO HINGE · EFI360 · PILL-MORE GREASE BOOM · GREASE PILLOW · ROOF Guardian

CLARKSBURG PREMIUM OUTLETS®
A SIMON CENTER

Montgomery County Health & Human Services

Montgomery County Health
Plan Review Guide

DEPARTMENT OF HEALTH AND HUMAN SERVICES
LICENSURE AND REGULATORY SERVICES
255 Rockville Pike, Suite 100 • Rockville, Maryland 20850-2368
240-777-3986 • FAX 240-777-3088
Website: www.montgomerycountymd.gov/mc/services/hhs/license

PLAN REVIEW GUIDE

Food Service Plan Review

_____Location

_____Menu

_____HACCP Menu Review Forms

_____General Layout (to scale)

_____Finish Schedule

_____Equipment Schedule

_____Plumbing Riser

_____Lighting Plan

_____Ventilation

_____Person to Contact

_____Application & Fee

_____Workman's Compensation

_____Building Permit Reference #

Pool Plan Review

_____Location

_____Site Plan

_____Pool Layout

_____Piping Layout & Hydraulic calculations

_____Filter Room Layout

_____Bath House Plan

_____Equipment Schedule

_____Finish Schedule

_____Board of Appeals Opinion if applicable

_____Person to Contact

_____Application & Fee

_____Workman's Compensation

One (1) set of plans is required. Plans cannot be accepted until the above items are included with your submittal.

CLARKSBURG
PREMIUM OUTLETS®
A SIMON CENTER

Montgomery County Health Plan Review Application

Montgomery County Department of Health and Human Services
Licensure and Regulatory Services
255 Rockville Pike, Suite 100; 1st Floor, Rockville, Maryland 20850
Phone: 240-777-3986 Fax: 240-777-3088
www.montgomerycountymd.gov/licensure

Today's Date:_____

TO: Plan Submitter

SUBJECT: Plan Review Time Building Permit Number:_____

HAVE PLANS BEEN SUBMITTED TO PERMITTING SERVICES YES ☐ or NO ☐

New Construction ☐ Remodel ☐ Equipment Replacement ☐

Food Service Facility ☐ Swimming Pool ☐

In order to better serve you and others desiring plan approval, a minimum of 14 days is needed to conduct a thorough review of your food plans and 30 days of your pool plans. When this initial review has been conducted, you will be contacted regarding the status of the plans. Please do not expect to receive a response prior to 14 or 30 days from the date the plan is logged in. Thank you for your cooperation.

PLEASE PRINT

Name of Facility:_____

Address of Facility:_____

Owner's Name:_____

Contact Person's Name for Correspondence:_____

Contact Person's Telephone Number :_____

Address for Correspondence:_____

_____

Email Address:_____

Signature of Submitter:_____

NOTE: Swimming Pool applicants must also apply for a "Hazardous Materials Use Permit". Please contact Emergency Management at 240-777-2300

OFFICE USE ONLY

Application Fee:_____ Plan Review Fee:_____ Receipt Number:_____ Staff Initials:_____

Check/Money Order/Approval Code: _____

Revised 10/11

FEE SCHEDULE

Type of License	Fee
(A) Low Priority (Facilities that serve commercially packaged potentially hazardous foods directly to the consumer; or non-potentially hazardous food that is cut, assembled, or packaged on the premises, such as candy, popcorn, and baked goods; or hand dipped ice cream)	$240.00
(B) Moderate Priority (Facilities that serve potentially hazardous food that is prepared requiring the food to pass through the temperature danger zone, 41°F to 135°F, one time before service, such as cooking, hot holding, and then serving; or facilities that cut, assemble, or package on the premises, such as meats)	$330.00
(C) High Priority (Facilities that serve potentially hazardous food that is prepared a day or more in advance of service; or using food preparation methods that require the food to pass through the temperature danger zone, 41°F to 135°F, two or more times before service, such as cooking, cooling, and then reheating)	$600.00
Equipment Replacement (Food Service Facility)	$160.00
Mobile Food Service facility means a food service facility that is a mechanically, electrically, manually, or otherwise propelled vehicle operating on land or water that moves as part of its routine operation.	$ 55.00
Swimming Pool	$480.00
Equipment Replacement (Swimming Pool)	$260.00

CLARKSBURG
PREMIUM OUTLETS®
A SIMON CENTER

Montgomery County Health
Food Service Facility License Application

Montgomery County Department of Health and Human Services
Licensure and Regulatory Services
255 Rockville Pike, 1st Floor, Suite 100, Rockville, Maryland 20850
Phone: 240-777-3986 Fax: 240-777-3088
www.montgomerycountymd.gov/licensure

FOOD SERVICE FACILITY LICENSE APPLICATION

(LICENSES ARE NOT TRANSFERABLE FROM LOCATION TO LOCATION OR PERSON TO PERSON)

☐ New ☐ Renewal ☐ Change of Owner ☐ Name Change **TODAY'S DATE:** _____

Name of Facility: _____

Address: _____

Telephone No.: _____ Fax No.: _____ Federal Tax ID: _____

Email Address **(REQUIRED)**: _____

Mailing Address (If Different): _____

Number of Seats or Square Footage (if no seats): _____ Mail license to: Facility ☐ or Owner ☐

Does the Facility Provide Catering? Yes ☐ No ☐

Owner/Corporation Name: _____ Telephone No.: _____

Address of Owner/Corporation: _____

Former Name of Facility (if applicable): _____ Working Hours and Days Open for Business: _____

Water Supply: Public ☐ On-Site/Well ☐ **Sewage**: Public ☐ On-Site/Septic System ☐

(NOTE: Allow 30 days for well water testing and septic inspection. Contact DPS/Well & Septic Section at 240-777-6300)

WSSC ☐ or City of Rockville / Poolesville ☐ Account Number: _____

Workers' Compensation Insurance Company Name: _____ **Policy/Binder No.**: _____

Check here ☐ if Sole proprietor. The business is a sole proprietorship with no employees. Members of a partnership or LLC, must apply for a Certificate of Compliance from the Worker's Compensation Commission (410-864-5100 or 800-492-0479). Check here ☐ if a Certificate of Compliance is on file in our office.

If you do not have Worker's Compensation Insurance, you must submit a copy of the Certificate of Compliance issued by the Worker's Compensation Commission (410-864-5100 or 800-492-0479).

EMERGENCY CONTACT INFORMATION

Emergency Contact Name: _____

Telephone Number: _____ (NOT the facility telephone number) Fax Number: _____

Email: _____

Montgomery County Department of Health and Human Services must be notified when the emergency contact information changes.

I hereby certify that the above information is accurate and complete:

Signature of Applicant: _____

Printed Name and Title of Applicant: _____

Payment Method

☐ Check ☐ Money Order ☐ Visa ☐ MasterCard **CASH IS NOT ACCEPTED** Amount: $_____

Credit card payments fax to: 240-777-4531 (confidential fax line).

Credit Cardholder's Name: _____

Credit Card No: _____ Exp. Date: _____ 3 Digit Security Code: _____

I agree to pay the indicated total amount according to card issuer agreement:

Cardholder's Signature: _____

Submit completed application and application fee to address at the top of the application. Checks or money orders are payable to "Montgomery County, Maryland".

OFFICE USE ONLY

Receipt No: _____ Amount Paid: _____ Date Issued: _____

Check No:/Money Order: _____ Expires: _____ Staff Initials: _____

FEE SCHEDULE

Type of License	Fee
(A) Low Priority (Facilities that serve commercially packaged potentially hazardous foods directly to the consumer; or non-potentially hazardous food that is cut, assembled, or packaged on the premises, such as candy, popcorn, and baked goods; or hand dipped ice cream)	$200.00
(B) Moderate Priority (Facilities that serve potentially hazardous food that is prepared requiring the food to pass through the temperature danger zone, 41°F to 135°F, one time before service, such as cooking, hot holding, and then serving; or facilities that cut, assemble, or package on the premises, such as meats)	$375.00
(C) High Priority (Facilities that serve potentially hazardous food that is prepared a day or more in advance of service; or using food preparation methods that require the food to pass through the temperature danger zone, 41°F to 135°F, two or more times before service, such as cooking, cooling, and then reheating)	$525.00
(D) Non-Profit Charitable Organization:	$100.00
(E) Facility (Facilities other than Non-Profit Charitable Organizations that are also licensed as Private Schools, Hospitals, or Care Homes)	$130.00
(F) Mobile Facilities, Event Series, or Seasonal or Pool Snack Bars operating for more than 14 days but less than 90 days with operating dates printed on the license:	$175.00

CLARKSBURG PREMIUM OUTLETS®
A SIMON CENTER

Montgomery County Health Plan Review Guidelines

Montgomery County Department of Health and Human Services
Licensure & Regulatory Services
255 Rockville Pike, Suite 100
Rockville, Maryland 20850

Phone: 240-777-3986
Fax: 240-777-3088
www.montgomerycountymd.gov

GUIDELINES FOR BUILDING OR REMODELING A FOOD SERVICE FACILITY

Are you planning to operate a new retail food service facility or alter an existing facility (either by renovation or the addition of equipment)? The information contained in this packet is intended to assist you in obtaining Montgomery County Department of Health and Human Services, Licensure and Regulatory Services' approval for the use of the new facility or equipment. Please allow ten (10) business days for the initial review of the plans or information submitted. If you have any questions, please contact DHHS, Licensure and Regulatory Services at 240-777-3986.

LICENSES AND PERMITS

SECTION I: NEW FACILITIES

[ ] 1.1. Submit a complete set of architectural drawings to Licensure and Regulatory Services.

[ ] 1.2. Apply for a Food Service Facility License with License and Regulatory Services (see Attachment A for the application).

[ ] 1.3. If you are planning to provide alcohol beverages, obtain a liquor license by contacting the Board of Licensed Commissioners at 240-777-1999.

[ ] 1.4. If your facility is a chain or franchise (i.e., there is more than one facility in Maryland with the same menu, processing systems, and facility layout), additional architectural drawings need to be submitted to the State of Maryland Department of Health and Mental Hygiene Office of Food Control for review and approval. Contact the State of Maryland Division of Food Control at 410-767-8400 for further information.

[ ] 1.5. If your facility is serviced by public water and sewer, contact the Washington Suburban Sanitary Commission (WSSC) at 301-206-

8000 or the City of Rockville at 301-314-8240 (if your facility is within that jurisdiction) for information on connecting to the public utilities. If your facility is serviced by an on-site water or sewage disposal system, contact the Montgomery County Department of Permitting Services, Well and Septic Section at 240-777-6300 to obtain approval for on-site systems.

[ ] 1.6. Obtain a Trader's License by contacting the Clerk of the Circuit Court at 240-777-9460.

[ ] 1.7. Provide Workers' Compensation Insurance or a Certificate of Compliance from the Workers' Compensation Commission (see Attachment B). Contact 1-800-0479 for more information.

[ ] 1.8. Provide the name of an employee who has obtained a Montgomery County Certified Food Service Manager's card or who is enrolled in an approved food safety course. The Certified Manager must be an employee with the responsibility for implementing the facility's food safety (HACCP) plan (see Attachment C for more information).

SECTION II: ALL FACILITIES

Before construction or renovation work begins, you MUST obtain approval from Licensure and Regulatory Services in addition to obtaining a valid building permit. Submit one complete set of architectural drawings which must include the following information.

[ ] 2.1. Menu. List all the food items and beverages you plan to offer and submit a completed HACCP plan (see Attachment D). If your facility has a rotating menu cycle, provide a representative list of the food items and beverages you plan to offer.

[ ] 2.2. General Layout. Provide scaled drawings identifying the location of all equipment, fixtures, walls, doors, lights, drains, counters, bathrooms, storage rooms, offices, refuse storage, wait staff areas, dining rooms, etc.

[ ] 2.3. Finish Schedule. List the surface finish of the floors, walls, baseboards, and ceilings. Specify the material and color used for each finish. All finishes must be durable, smooth, washable, non-absorbent, and grease resistant.

[ ] 2.4. Equipment Specification. List all the equipment to be installed. Include the type, manufacturer, model number, dimensions,

performance capacity, and how the equipment will be installed (casters, legs, or sealed to the floor and wall). Also include information that:

[ ] 2.4.1. Equipment is listed by the National Sanitation Foundation (NSF at www.nsf.org) or equivalent. Equipment that is custom built must meet the standards of NSF;

[ ] 2.4.2. Equipment is moveable or is sealed to adjacent surfaces, on casters, or spaced from walls and adjacent equipment to facilitate cleaning;

[ ] 2.4.3. Floor mounted equipment is placed on approved 6 inch legs and counter mounted equipment weighing more than 80 lbs. is placed on approved 4 inch legs;

[ ] 2.4.4. If the equipment is painted, a lead-free, non-toxic, light-colored, glossy enamel paint or high gloss varnish is used;

[ ] 2.4.5. Shelving for walk-in units is constructed of durable, non-absorbent, and non-corrosive materials such as stainless steel;

[ ] 2.4.6. The bottom shelf of a shelving unit intended for storing open foods or utensils is at least 18 inches from the floor;

[ ] 2.4.7. The design of salad bars, buffets, and bulk food service equipment meets the design standards set forth in this guide. When unwrapped food is placed on display, provide covers or install guards to prevent contamination from a customer's sneeze or cough (e.g., a sneeze guard). The guards may be hung from the ceiling, anchored to the adjoining wall, clamped on the display counter, or be free-standing. Provide elevation information on the sneeze guard and submit a cross-section drawing of the installation. Also, provide equipment to maintain hot or cold food at the proper temperature;

[ ] 2.4.8. All cracks, holes, and gaps between non-portable equipment are sealed or caulked;

[ ] 2.4.9. An adequate number of preparation tables are provided to separate raw meats from ready-to-eat food items during preparation;

[ ] 2.4.10. Adequate refrigeration and freezer space capable of maintaining proper temperatures is provided;

[ ] 2.4.11. Adequate hot holding equipment capable of maintaining proper temperatures is provided if food is to be hot held;

[ ] 2.4.12. Adequate equipment to rapidly cool and reheat food is provided, if those processes are indicated in the HACCP plan. This equipment must be able to restrict the time a food is in the temperature danger zone; and

[ ] 2.4.13. If a charbroiler, pit barbeque, smoker, or similar cooking equipment of at least five square feet is installed, an air quality Permit-to-Construct from the Maryland Department of the Environment is obtained. Contact the Montgomery County Department of Environmental Protection, Division of Environmental Policy and Compliance at 240-777-7770 for forms or additional information.

[ ] 2.5. Plumbing Fixtures and Plumbing Riser Diagram (Note: The Washington Suburban Sanitary Commission (WSSC) is the agency responsible for issuing plumbing permits, except in the city limits of Rockville). Submit architectural drawings that indicate hot and cold running water is provided under pressure in all areas where food is prepared and where equipment and utensils are washed. Produce washing sinks in retail markets only need to be supplied with cold water. The hot water supply must be of sufficient quantity so that hot water is continuously provided, even during periods of peak demand. Refer to the Food and Drug Administration (FDA) plan review guide (www.cfsan.fda.gov/~dms/prev-toc.html) for guidelines on sizing water heaters. Also, include information that:

[ ] 2.5.1. Utensil washing is provided via a three compartment sink or a mechanical dishwashing machine to properly wash, rinse, and sanitize equipment and utensils. One and two compartment sinks are not approved for utensil washing. Include information that:

[ ] 2.5.1.1. A test kit is provided for checking the sanitizer concentration if a chemical sanitizer is used. If hot water is used as the sanitizer, provide a maximum registering thermometer or temperature tape for checking the hot water temperature;

[ ] 2.5.1.2. A three compartment sink is equipped with right and left integral drainboards. In addition, each compartment must be of sufficient size to accommodate the largest utensil or equipment being cleaned in the sink. Each vat of the three compartment sink must drain independently and indirectly; and

2.5.1.3. A mechanical dishwashing machine is equipped with:

[ ] 2.5.1.3.1. A pressure gauge for the final rinse cycle;

[ ] 2.5.1.3.2. Built-in temperature gauges for the wash and sanitizing cycles;

[ ] 2.5.1.3.3. A compartment of sufficient size to accommodate the largest utensil or equipment being cleaned in the unit;

[ ] 2.5.1.3.4. A booster heater capable of heating the water to at least 180°F. or an automatic chemical dispensing system; and

[ ] 2.5.1.3.5. A pre-rinse device.

2.5.2. Hand washing facilities are:

[ ] 2.5.2.1. Located in or adjacent to toilet facilities;

[ ] 2.5.2.2. Located in each food preparation, processing, and utensil washing area. Additional sinks may need to be installed so that no point is more than 25 feet from a hand sink;

[ ] 2.5.2.3. Equipped with soap and disposable hand towel dispensers;

[ ] 2.5.2.4. Provided with hot and cold water tempered by the use of a mixing valve or combination faucet. The minimum required hot water temperature is 110°F.;

[ ] 2.5.2.5. Provided with a splash shield if the hand sink is less than 18 inches from unprotected food preparation, food storage, or utensil storage areas. Splash shields must extend at least 12 inches above the rim; and

[ ] 2.5.2.6. Designated for hand washing only.

[ ] 2.5.3. Dipper wells are provided to store dispensing utensils used in serving frozen desserts. Dipper wells must have:

[ ] 2.5.3.1. A water source with control valve;

[ ] 2.5.3.2. An air gap at the point that water is introduced into the well; and

[ ] 2.5.3.3. An indirect drain.

2.5.4. Indirect drain connections are provided for:

[ ] 2.5.4.1. Dishwashing machines, refrigerators (unless self contained), steam kettles, ice machines, walk-in units, or any food service equipment that generates waste. Indicate that the equipment drains into an open-site drain; and

[ ] 2.5.4.2. Food preparation and utensil washing sinks. Multiple sinks must be provided with independent, as well as indirect, drains.

[ ] 2.5.5. Direct connections are provided with an approved, properly installed vacuum breaker or backflow preventer for equipment directly connected to a potable water system and/or having a threaded hose bib. Contact WSSC or the City of Rockville for information on approved backflow protection devices;

[ ] 2.5.6. Floor drains not regularly receiving waste are provided with an automatic trap priming system or 6 inch trap seal;

[ ] 2.5.7. Waste water lines are not located over food preparation or storage areas;

[ ] 2.5.8. Mop sinks are provided with hooks for hanging mops and brooms and an approved vacuum breaker;

[ ] 2.5.9. Bathrooms (Contact WSSC or the City of Rockville for information on the required number of bathrooms and bathroom fixtures) are provided and:

[ ] 2.5.9.1. Are fully enclosed;

[ ] 2.5.9.2. Have self-closing and inward opening doors;

[ ] 2.5.9.3. The materials used for the floors, walls, and baseboards meet the criteria specified in Section II.3 of this guide;

[ ] 2.5.9.4. Proper ventilation via mechanical ventilation in conjunction with screened louvers or forced make-up air is provided. Mechanical exhaust ventilation must exhaust at a rate of at least 2 cfm per square foot of floor area;

[ ] 2.5.9.5. Appropriate covered trash receptacles are provided, including a separate covered receptacle in the women's bathroom; and

[ ] 2.5.9.6. New facilities constructed with seats for on-site eating and facilities changing their operation to include on-site eating, are provided with a bathroom for the public. A customer must not pass through the kitchen or food storage area to access the bathroom.

[ ] 2.5.10. The location of garbage grinders and trash compactors is specified; and

[ ] 2.5.11. The location of a grease recovery unit is specified, if required. Contact WSSC Code Enforcement at 301-206-8000 or City of Rockville at 240-314-8240 for additional information.

2.6. Adequate lighting is provided and:

[ ] 2.6.1. The type and location of lighting and the method of shielding is specified;

[ ] 2.6.2. The light levels, in foot candles, for each area, including the interior of walk-in units is specified. The minimum requirement is 50 foot candles in food preparation and utensil washing areas and 20 foot candles 30 inches from the floor in food storage, walk-in units, dining areas during cleaning, and bathrooms; and

[ ] 2.6.3. The type of shielding for lights installed inside any equipment is specified.

[ ] 2.7. A dressing room or personal storage is provided specifying the type and location of lockers, hooks, etc.

2.8. Refuse disposal is provided. The information must specify:

2.8.1. For exterior refuse disposal:

[ ] 2.8.1.1. The location and type of refuse containers;

[ ] 2.8.1.2. The non-absorbent material on which the refuse containers are stored;

[ ] 2.8.1.3. The procedure for cleaning refuse containers;

[ ] 2.8.1.4. The refuse containers are vermin proof; and

[ ] 2.8.1.5. The drainage method for refuse storage areas.

2.8.2. For interior refuse storage:

[ ] 2.8.2.1. The location of trash receptacles;

[ ] 2.8.2.2. The procedure for cleaning trash receptacles; and

[ ] 2.8.2.3. The location of trash storage within facility, if applicable.

[ ] 2.9. Kitchen and equipment ventilation is provided. Submit architectural drawings indicating that kitchen ventilation is designed and installed to remove grease droplets, vapors, toxic gases, excessive steam or heat, condensation, and smoke from a facility. All ventilation systems must discharge outside the facility and provide the system with make-up air. Make-up air vents must be designed to prevent the entrance of dust, dirt, insects, or other contaminating material. Ventilation of individual equipment may be required to prevent the accumulation of debris and prevent grease or condensate from dripping into food or onto food preparation surfaces. Also, provide information that:

[ ] 2.9.1. Bathroom ventilation is separate from other ventilation systems and is vented directly outside;

[ ] 2.9.2. The minimum air speed at the edge of the cooking surface is at least fifty (50) feet per minute in the direction of the exhaust;

[ ] 2.9.3. Air is exhausted from within the hood and air movement is uniform through the hood;

[ ] 2.9.4. Hood equipment is capable of capturing sudden clouds of steam, vapor, or smoke;

[ ] 2.9.5. The hood systems are installed to facilitate cleaning and are constructed of stainless steel or durable, smooth, easily cleanable materials (paint is not approved). Interior reinforcing and the fire suppression system must be smooth, easily cleanable, and not create a surface on which grease or condensation will collect and drip;

[ ] 2.9.6. The hood has a smooth interior and is free of interior lips or edges that may allow grease or dirt to accumulate;

[ ] 2.9.7. The hood is provided with an approved means to capture and dispose of accumulated grease, such as a removable grease trough;

[ ] 2.9.8. The distance between the bottom of the hood and the top of the cooking surface is as short as possible, without causing injury or interfering with kitchen personnel at work;

[ ] 2.9.9. Canopy-type hoods overhang the cooking equipment a minimum of 6 inches on all sides for Underwriters Laboratories (UL) 710 listed hoods. Fabricated canopy-type hoods overhang the cooking equipment a minimum of 12 inches on all sides. The minimum depth must be 24 inches;

[ ] 2.9.10. Filters are baffle-type or a type approved by the Fire Marshall. Filters must fit tightly against the supporting framework and be easy to remove for periodic cleaning. The bottom of the filter frame is equipped with ¼ inch weep holes. The joints between adjacent filters must prevent the passage of air.; and

[ ] 2.9.11. The hood ventilation is not blocked by overshelves, broilers, or salamander units unless approval is obtained by this office.

[ ] 2.9.12. Contact the Department of Permitting Services at 240-777-6200 and Fire Code Enforcement at 240-777-2457 for additional requirements. If your facility is located

within the City limits of Rockville or Gaithersburg, contact those jurisdictions for additional requirements.

2.10. The following miscellaneous items are addressed:

2.10.1. Storage systems:

[ ] 2.10.1.1. The type, manufacturer, model number, and location of shelving, platforms, etc.;

[ ] 2.10.1.2. The location for storing cleaners/toxic items, single use items, equipment, utensils, and food, which must be in a separate cabinet or room. Exposed food and utensils must be stored at least 18 inches from the floor;

[ ] 2.10.2. Doors: All doors to the outside are self-closing and rodent proof;

[ ] 2.10.3. Choking Posters: Choking posters are provided and posted. Posters may be purchased from the American Red Cross at 301-588-2515;

[ ] 2.10.4. Delivery: Adequate equipment is provided for the hot and cold transportation of potentially hazardous foods;

[ ] 2.10.5. A minimum of 36 inches of aisle space is provided in front of equipment;

[ ] 2.10.6. The method used to dispense single service items or self-service condiments and the location of those items; and

[ ] 2.10.7. The storage location of clean and soiled laundry. If on-site laundry service is provided, show the location of the washing machine and dryer.

Contact Information:

Department of Health and Human Services, Licensure and Regulatory Services: 240-777-3986

Department of Permitting Services, Division of Building Construction: 240-777-6200

Department of Permitting Services, Well and Septic Office: 240-777-6300

Office of the Board of Licensed Commissioners (Liquor Control): 240-777-1999

Clerk of the Circuit Court: 240-777-9460

Workers' Compensation Commission: 1-800-492-0479

Fire Code Enforcement/Fire Marshall: 240-777-2457

Department of the Environment, Division of Environmental Policy and Compliance: 240-777-7770

Washington Suburban Sanitary Commission: 301-206-8000

State of Maryland Department of Health and Mental Hygiene, Office of Food Control: 410-767-8400

City of Rockville, Inspection Services: 240-314-5040 (www.rockvillemd.gov)

City of Barnesville: 301-972-8411 (www.barnesvillemd.org)

City of Gaithersburg: 301-258-6330 (www.gaithersburgmd.gov)

City of Laytonsville: 301-869-0042 (www.laytonsville.md.us)

City of Poolesville: 301-428-8927 (www.ci.poolesville.md.us)

City of Washington Grove: 301-926-2256 (www.washingtongrovemd.org)

National Sanitation Foundation: (www.nsf.org)

Underwriters Laboratories: (www.ul.com)

Food and Drug Administration: (www.fda.gov) For the plan review guide click on: (www.cfsan.fda.gov/~dms/prev-toc.html)

American Red Cross: 301-588-2515 (www.redcross.org)

CLARKSBURG
PREMIUM OUTLETS®
A SIMON CENTER

Montgomery County Health
HACC Plan Review Guidelines

Montgomery County Department of Health and Human Services
Licensure and Regulatory Services
255 Rockville Pike, Suite 100, 1st Floor, Rockville, Maryland 20850
Phone 240-777-3986 Fax: 240-777-3088
www.montgomerycountymd.gov/licensure

Guidelines for Submitting a Hazard Analysis Critical Control Point (HACCP) Plan

Health-General Article, §21-321, Annotated Code of Maryland, and the Code of Maryland Regulations (COMAR) 10.15.03 Food Service Facilities require that plans and specifications be submitted to the Department when a person proposes to construct, remodel or alter a food establishment, or convert or remodel an existing building for use as a food establishment. Plans and specifications for the building and equipment, and information regarding the foods to be prepared, processed, or manufactured are required. This information will be used to classify the facility as high, moderate, or low priority. Definitions of priority assessment levels are found in COMAR 10.15.03.33C.

A HACCP plan is required for all high or moderate priority facilities. Facilities which serve only hand dipped ice cream or commercially packaged potentially hazardous foods do not require a HACCP plan. The following information is intended to assist you in providing the necessary information for both priority assessment and HACCP plan development.

Contents

A. Priority Assessment Information
B. General food Handling Information and Procedures
C. HACCP Plan Required Contents
D. Model HACCP Format

A. Priority Assessment Information

1. Menu or foods – Provide a copy of the menu or a written description of the foods to be prepared and served.
2. Food service system – Specify the food preparation and service systems you will use, i.e. cook-serve, cook-chill-reheat-hot hold-serve, cold hold-serve.
3. Population served – Specify whether you serve food in a health care facility, as defined in COMAR 10.15.03.02B(38).

B. General Food Handling Information and Procedures (only required for facilities classified as "high" or "moderate"):

1. Describe how you will ensure that all foods are obtained from approved sources.
2. Specify how cross-contamination from raw to cooked or ready-to-eat foods will be prevented.
3. Indicated how frozen potentially hazardous foods will be thawed.
4. Indicate how potentially hazardous food will be cooled, i.e. ice baths, shallow pans, rapid chill.
5. Specify whether any prepared foods are distributed off-premises.
6. Specify whether any refrigerated foods are received which require storage temperatures below 41°F, i.e. pasteurized crab meat at 38°F.
7. Indicate whether reduced oxygen packaging of food, as defined in COMAR 10.15.03.02B(63), will be conducted onsite.
8. Include specific information for any processes or procedures which incorporate:
   - "Time-only" control (see COMAR 10.15.03.08),
   - Serving raw or undercooked animal foods (see COMAR 10.15.03.10 C, D &F).
   - Acidification of ready to serve food products.

C. HACCP Plan Required Contents

The plan must include:

1. Identification of Critical Control Points (CCP). CCPs generally include cooking, cooling, reheating, cold holding, and hot holding, but other steps may be included if needed for a specific food. Note that cold food preparation, like chopping, mixing and slicing, is not a CCP step. Hazards are controlled during those processes by following Good Retail Practices (GRPs), sometimes referred to as Standard Operating Practices (SOPs).
2. Critical limits for each CCP.
3. Monitoring procedures for each CCP.
4. The corrective action that will be taken if there is a loss of control at a CCP due to such factors as employee error, equipment malfunction, or power failure.
5. Verification procedures that will ensure proper monitoring of each CCP such as calibration of cooking and holding equipment and thermometers, and maintenance and review of records such as temperature logs. Using logs for record keeping is strongly encouraged, but not required, as long as the facility can demonstrate that temperatures are routinely monitored, as described in the HACCP plan, and that specified corrective actions are taken when critical limits are not met.
6. A list of equipment used to support the proposed food service systems and maintain control at each CCP.
7. Written procedures for employee training on HACCP procedures (see attached example).

D. Processes

PROCESS 1

Food items do not go through a cook step. For example: commercially prepared ready-to-eat foods, cold cut deli sandwiches, salads in which ingredients are not pre-cooked, cut melons and sprouts.

Menu items prepared under Process 1:

_____

_____

Critical Control Point	Critical Limit	Monitoring Procedures	Corrective Actions	Equipment Used
Receiving and Storage				
Processing (Washing, Cutting, Assembling)				
Cold Holding				

PROCESS 2

Food items prepared for same day service with no reuse of leftovers. For example: cooked fast food meals, soups, rice, and other cooked foods where leftovers are not saved. **No cooling** of foods for ingredients in other dishes.

Menu items prepared under Process 2:

_____

_____

Critical Control Point	Critical Limit	Monitoring Procedures	Corrective Actions	Equipment Used
Receiving and Storage				
Cold Holding				
Cooking				
Hot Holding				

PROCESS 3

Complex Preparation. Food items cooked and cooled, then possibly reheated. Food items travel through the temperature danger zone more than one time. Includes soups, salads, sauces and meats that are cooled and reheated.

Menu items prepared under Process 3:

_____

_____

Critical Control Point	Critical Limit	Monitoring Procedures	Corrective Actions	Equipment Used
Receiving and Storage				
Cold Holding				
Cooking				
Hot Holding				
Cooling				
Reheating				

WRITTEN PROCEDURES FOR EMPLOYEE HACCP TRAINING
(SAMPLE)

All employees will be trained to use the approved HACCP plan prior to beginning employment and periodically after that. Training will include identification of the processes that are critical control points, how these processes will be monitored and what corrective actions must be taken critical controls are violated. The approved HACCP plan will be available in the food preparation area at all times.

Food temperature logs* will be used to monitor product temperatures during the preparation process. These completed logs will be maintained in the food preparation area, and held for review by management, as part of the HACCP monitoring system.

Training in basic sanitation will include hand washing procedures and methods for cleaning and sanitizing utensils, equipment, and food preparation surfaces. All employees will be trained to use and calibrate a metal stem thermometer, and will be required to check and recalibrate thermometers weekly.

*Note – Use of logs for record keeping is strongly encouraged, but not required, as long as the facility can demonstrate that temperatures are routinely monitored, as described in the HACCP plan, and that specified corrective actions are taken when critical limits are not met.

FOOD	MINIMUM INTERNAL TEMPERATURE		HOLDING TIME AT SPECIFIED TEMPERATURE
	°F	°C	
Shell eggs. Fish, meat, and all other potentially hazardous foods not specified in Chart 1.	145	63	15 seconds
Shell eggs not prepared for immediate service, ratites, comminuted fish and meats, game animals commercially raised for food, and injected meats.	145	63	3 minutes
	or		
	150	66	1 minute
	or		
	155	68	15 seconds
	or		
	158	70	< 1 second
Whole roasts (beef, corned beef, pork and cured pork roasts such as ham). Holding time may include post oven heat rise. Minimum oven temperature for roasts greater than 10 pounds is 250°F for dry heat. For roasts less than 10 pounds, minimum oven temperatures are 350°F for dry heat and 325°F for convection ovens. Oven temperature may be 250°F or less for high humidity cooking (relative humidity greater that 90 percent for at least 1 hour or in a moisture impermeable bag that provides 100 percent humidity).	130	54.4	112 minutes
	or		
	131	55	89 minutes
	or		
	133	56.1	56 minutes
	or		
	135	57.2	36 minutes
	or		
	136	57.8	28 minutes
	or		
	138	58.9	18 minutes
	or		
	140	60	12 minutes
	or		
	142	61.1	8 minutes
	or		
	144	62.2	5 minutes
	or		
	145	62.8	4 minutes
	or		
	147	63.9	134 seconds
	or		
	151	66.1	54 seconds
	or		
	155	68.3	22 seconds
	or		
	158	70	none
Poultry; stuffed meat, pasta, or poultry, and exotic bird species; wild game animals; and stuffing containing fish, meat, or poultry. Reheat of leftovers for hot holding.	165	74	15 seconds
Raw foods of animal origin cooked in a microwave oven.	165	74	Hold for 2 minutes after removing from microwave oven
Fruits and vegetables and ready-to-eat commercially processed foods cooked for hot holding.	135	57	None
Ready-to-eat commercially processed foods for immediate service.	None		None

Montgomery County Department of Health and Human Services
Licensure and Regulatory Services
255 Rockville Pike, Suite 100, 1st Floor; Rockville, Maryland 20850
Phone: 240-777-3986 Fax: 240-777-3088
www.montgomerycountymd.gov/licensure

HACCP CHART

STEP (Control Point / CP or Critical Control Point / CCP)	CRITICAL LIMIT (What is the standard that must be met?)	MONITORING PROCEDURE (Is the critical limit being met?)	SAMPLE CORRECTIVE ACTIONS (How can you protect the public and bring the process back into control)	VERIFICATION (Do your procedures ensure the critical limit is being met?)
RECEIVE	• Approved source • Free from spoilage • Proper temperature • Egg and shellfish receipts • Packaging intact (i.e., not torn or damaged)	• Inspect food • Measure and document food temperature • Inspect packaging • Check invoice (receiving only what was ordered?)	• Reject the food • Contact supplier • Change delivery schedule, type, or quantity of food ordered • Train employees on proper receiving practices	• Review temperature logs • Review invoices • Inspect delivery vehicle to determine if clean and refrigerated (if appropriate) • Review corrective action records
STORE	• Maintain cold food at 41°F or below • Protect from contamination • Follow the recommended sell-by / use-by dates • Label and date food for proper rotation • Store food off the floor	• Measure and document food temperature • Inspect food for signs of contamination • Check refrigeration units (overstocked? clean?) • Measure and document equipment temperatures • Calibrate food and equipment thermometers	• Discard contaminated food • Cover food • Relocate food • Provide adequate refrigeration • Repair refrigeration units • Repair or replace non-functioning thermometers • Train employees on proper food storage practices	• Review food temperature logs • Review equipment temperature logs • Review equipment maintenance invoices • Review calibration logs • Review corrective action records
COLD HOLD	• 41°F or below • Frozen foods at 0°F or below • Pasteurized crab meat at 38°F or below • Shell eggs at 45°F or below • Shellfish at 45°F or below	• Measure and document food temperature • Inspect for signs of contamination • Check for overstocking of refrigeration units) • Measure and document equipment temperatures • Calibrate food and equipment thermometers • Check food labels and dates	• Adjust thermostat to a lower setting • Use proper equipment • Discard food if above 41°F for more than 2 hours • Cover food • Relocate food • Provide adequate refrigeration • Repair refrigeration units • Repair or replace non-functioning thermometers • Train employees on proper cold holding practices	• Review food temperature logs • Review equipment temperature logs • Review equipment maintenance invoices • Review calibration logs • Review corrective action records • Review employee training logs

STEP (Control Point / CP or Critical Control Point / CCP)	**CRITICAL LIMIT** (What is the standard that must be met?)	**MONITORING PROCEDURE** (Is the critical limit being met?)	**SAMPLE CORRECTIVE ACTIONS** (How can you protect the public and bring the process back into control)	**VERIFICATION** (Do your procedures ensure the critical limit is being met?)
THAW	• In a refrigerator at 41°F or below • Under running potable water less than 70°F • In a microwave as part of the cooking process	• Measure and document food temperatures • Measure and document equipment or water temperatures • Check to see that food and equipment thermometers are properly calibrated	• Refrigerate for a longer period of time • Discard product if above 41°F for more than 2 hours • Cook from a frozen state • Calibrate food and equipment thermometers • Train employees on proper food thawing practices	• Review food temperature logs • Review equipment temperature logs • Review equipment maintenance invoices • Review calibration logs • Review corrective action records • Review employee training logs
COMBINE / PROCESS	• Wash hands properly • Wash and sanitize utensils and work surfaces • Wear single use gloves when handling ready-to-eat food • Pre-chill ingredients for ready-to-eat food • Wash / peel raw fruits and vegetables • Food is held out of temperature control for less than 2 hours if rapidly re-chilled to 41°F • Eggs are cold held when not combined for immediate service • Minimize hand contact • Prohibit ill or infected employees from handling food • Avoid cross contamination of food, utensils, and work surfaces	• Measure and document food temperatures • Measure and document equipment or water temperatures • Check handsinks for soap, paper towels, and hot and cold water • Check sanitizer concentration • Observe handwashing practices • Observe food handling practices • Observe cleaning practices • Check for illness in employees • Check for burns, cuts, boils, or excessive jewelry on employees' hands	• Minimize the time that the food is out of temperature control • Discard food is above 41°F for more than 2 hours • Use separate areas and utensils for raw and cooked food preparation • Wear single use gloves when handling ready-to-eat food • Rapidly re-chill finished food • Decrease volume of food being prepared / out of refrigeration at one time • Use proper utensils that have been washed and sanitized • Remove ill or infected employees from food handling duties • Remove excessive jewelry and wash hands before continuing food handling duties • Train employees on proper food handling practices and equipment washing procedures	• Review food temperature logs • Review equipment temperature logs • Review equipment maintenance invoices • Review calibration logs • Review corrective action records • Review employee training logs

STEP (Control Point / CP or Critical Control Point / CCP)	**CRITICAL LIMIT** (What is the standard that must be met?)	**MONITORING PROCEDURE** (Is the critical limit being met?)	**SAMPLE CORRECTIVE ACTIONS** (How can you protect the public and bring the process back into control)	**VERIFICATION** (Do your procedures ensure the critical limit is being met?)
COOK (At required minimum temperature for at least 15 seconds, except whole roasts)	• Poultry and stuffed meats or pasta at 165°F or above • Raw foods of animal origin cooked in a microwave (hold for at least 2 minutes after cooking) • Ground beef at 155°F or above • Pork at 155°F or above • Shell eggs for immediate service, fish, other meats at 145°F • Shell eggs not for immediate service and injected meats at 155°F • Whole roasts at 130°F for 122 minutes or as specified in COMAR 10.15.03.10A(1) • Fruits and vegetables cooked for hot holding and commercially processed foods at 135°F	• Measure and document food temperatures • Measure and document equipment temperatures • Observe cooking practices • Check to see that food and equipment thermometers are properly calibrated	• Increase cooking time • Adjust thermostat to a higher setting • Use proper equipment • Cook smaller amounts of food • Relocate food • Provide adequate cooking equipment • Repair or replace non-functioning equipment or thermometers • Calibrate food and equipment thermometers • Train employees on proper cooking temperatures	• Review food temperature logs • Review equipment temperature logs • Review equipment maintenance invoices • Review calibration logs • Review corrective action records • Review employee training logs
HOT HOLD	• 135°F or above	• Measure and document food temperatures every 2 hours • Measure and document equipment temperatures • Observe hot holding practices • Check to see that food and equipment thermometers are properly calibrated	• Reheat food to at least 165°F if below 135°F for not more than 2 hours • Discard food after 2 hours • Reduce the amount of food • Preheat equipment • Cover the food to retain heat • Use shallow containers • Stir frequently • Use proper equipment • Repair or replace non-functioning equipment or thermometers • Calibrate food and equipment thermometers • Train employees on proper hot holding practices	• Review food temperature logs • Review equipment temperature logs • Review equipment maintenance invoices • Review calibration logs • Review corrective action records • Review employee training logs

STEP (Control Point / CP or Critical Control Point / CCP)	**CRITICAL LIMIT** (What is the standard that must be met?)	**MONITORING PROCEDURE** (Is the critical limit being met?)	**SAMPLE CORRECTIVE ACTIONS** (How can you protect the public and bring the process back into control)	**VERIFICATION** (Do your procedures ensure the critical limit is being met?)
COOLING	• Hot Foods: To 41°F or below within 6 hours (i.e., from 135°F to 70°F within 2 hours and from 70°F to 41°F within 4 hours) • Ready-To-Eat Foods for cold service: To 41°F or below within 4 hours	• Measure and document food temperature • Measure and document equipment temperatures • Observe cooling practices • Check to see that food and equipment thermometers are properly calibrated • Check for signs of contamination	• Refrigerate in uncovered pans with food not more than 3 inches deep • Use an ice bath with frequent stirring • Reduce the volume of food • Cook then serve immediately, eliminating the need to cool • Use a blast chiller • Provide additional refrigeration equipment • Discard hot food if above 41°F for more than 6 hours • Discard cold service foods if above 41°F for more than 4 hours • Use a cooling wand • Add ice made from potable water as an ingredient • Train employees on proper cooling practices	• Review cooling logs • Review equipment temperature logs • Review equipment maintenance invoices • Review calibration logs • Review corrective action records • Review employee training logs
REHEAT	• 165°F or above within 2 hours	• Measure and document food temperature • Measure and document equipment temperatures • Observe reheating practices • Check to see that food and equipment thermometers are properly calibrated	• Increase the temperature of the reheating equipment • Increase the reheating time, but keeping within 2 hours • Reduce the volume of food • Use a more rapid reheating procedure • Prepare only the amount needed for a meal to avoid leftovers • Discard leftovers • Purchase additional cooking equipment • Train employees on proper reheating practices	• Review food temperature logs • Review equipment temperature logs • Review equipment maintenance invoices • Review calibration logs • Review corrective action records • Review employee training logs
DELIVER	• Cold Foods: At 41°F or below • Hot Foods: At 135°F or above	• Measure and document food temperature • Measure and document equipment temperatures • Check to see that food and equipment thermometers are properly calibrated	• Use insulated or temperature controlled equipment or containers • Use temperature controlled vehicles • Reduce delivery area • Keep food covered during transport • Train employees on proper delivery practices	• Review food temperature logs • Review equipment temperature logs • Review equipment maintenance invoices • Review calibration logs • Review corrective action records • Review employee training logs

CLARKSBURG
PREMIUM OUTLETS®
A SIMON CENTER

Montgomery County Health
Health Department General Notations

General Health Department Notations

PLEASE NOTE: The following statements must be included on all plans submitted to the Health Department for review and approval.

1. All piping, conduit, bx cable, and similar construction will be either located inside a wall or installed with a minimum ¾-inch space from the wall or sealed to the wall.

2. All doors to the outside will be self-closing and rodent-proof.

3. A minimum of 50 foot-candles of shielded light will be provided at all work surfaces in food preparation areas, and a minimum of 20 foot-candles of shielded light will be provided at all storage areas, toilet rooms, locker rooms, garbage areas, utensil-washing areas, and dining areas during cleaning.

4. All restroom doors will be self-closing. All restrooms will be equipped with mechanical exhaust ventilation sized at a minimum rate of 2 cubic feet per minute per square foot of floor area and exhausting directly to the outside.

5. All floor-mounted equipment will be placed on NSF International (NSF) approved 6-inch legs, or the equivalent, and properly spaced from adjacent equipment or walls; or placed on NSF approved casters, or the equivalent; or properly sealed to all adjacent surfaces.

6. All counter-mounted food service equipment weighing in excess of 80 pounds will be mounted on NSF approved 4-inch legs.

7. All exposed raw wood will be sealed/painted and that all painting will be with lead-free, non-metallic, easily cleanable paint or a high quality varnish.

8. All annular openings in construction will be sealed/caulked to within 1/32 of an inch.

9. All exhaust hoods over cooking equipment will be capable of capturing and exhausting smoke generated from a 60-second smoke bomb.

10. The outside storage of refuse and grease will be in rodent-proof containers located on a paved surface.

11. All sink installations will be equipped with hot and cold running water through a mixing valve or combination faucet.

12. Wastewater from all applicable food service equipment will be individually plumbed to an open site drain with a minimum 1-inch air gap.

13. Montgomery County requires that less than .5 g per serving of artificial Trans fat be present in foods served throughout the County. Additionally signage is to be posted stating that the facility does not serve foods with artificial Trans fat.

14. Montgomery County requires that all menus and menu boards contain the nutritional information for each food served for chain facilities where the number of facilities exceeds 20 within the United States.

15. Montgomery County requires that a facility be under the control of a Montgomery County Certified Food Service Manager during all hours of operation. At the pre-opening inspection, someone with a Montgomery County card must be present.

16. All overhead plumbing in food service facilities must comply with COMAR 10.15.03, Section .18H(11)(b).

An application and associated fee for a food service facility permit must be received prior to scheduling the preopening inspection.

CLARKSBURG PREMIUM OUTLETS
LANDLORD'S WORKLETTER
FOOD COURT ONLY
11/19/2015

These specifications are prepared to aid Tenant in the coordination and approval of Tenant's improvement plan. Tenant should refer to the building floor plans and confirm all measurements and as-built conditions by visual inspection of the Premises before starting construction. In cases where these specifications are in conflict with Landlord's completed building plans or completed buildings, information contained in the building plans or completed buildings shall take precedence over these requirements. All work to be done by Tenant must be approved in writing by Landlord prior to the start of construction, and must be coordinated so as to not interfere with Landlord's construction. Landlord must approve Tenant's contractor prior to the start of construction. Tenant is responsible for the review fees of shell architect and MEP engineer for review of their plans prior to permitting - cost not too exceed $2,500. The area of Tenant Premises as shown on the plans has been calculated to the exterior face of exterior walls and to the centerline of demising walls between Tenant spaces. Tenant agrees that areas noted on the drawings are accurate. In the event Landlord determines that union labor is required in order to facilitate the timely completion of the Shopping Center, Landlord's Work and Tenant's Work, Landlord may, as a condition of its approval of any and all Tenant Contractors, require that Tenant's contractors be union contractors in order to facilitate the timely completion of Tenant's Work. In the event Landlord requires union labor, there will be no exceptions

Tenant must refer to Landlord's Requirements for Food Court Design and Construction, which shall be provided to all Food Court Tenants.

A. LANDLORD'S WORK

1. **Shell** – Includes unfinished structural frame, roof, roofing and exterior walls, no paint.

2. **Floor** – Includes properly prepared sub-grade. No concrete slab is provided.

3. **Service Corridor** – Stud wall with fire rating as required by code. Finished on common area and Tenant sides with gypsum board.

4. **Rear Door** – Single hollow metal 3'-0" x 7'-0" service door at Service Corridor. Door shall include standard hardware, exit lock only.

5. **Demising Partitions** – Metal studs only, extending from floor track to roof deck. Drywall and finish provided by Tenant as required by code, except on the front Landlord side of bulkhead area and on neutral pier. Front counter knee wall studs and cement board by Landlord..

6. **Utilities:**

(a) Electrical: One, 3" EMT conduit with one 200 Amp breaker and conductors (wire) pulled from Landlord's switch gear to a disconnect inside the Premises per Base Building plans. Capacity shall be 200 amps at 277/480v. Tenant shall provide and install distribution panel or panels, and transformer, size determined by tenant's engineers. Tenant is responsible for all electrical wiring distribution within the Tenant's space. Tenant is responsible for electric charges (i) at the turnover date, or (ii) if Tenant or Tenant's contractor takes possession of the space earlier, whichever is the earlier date. In any Shopping Center where Landlord is providing electricity directly to tenants, Tenant will be charged a one-time fee for the costs associated with calculating Tenant's projected energy usage.

(b) Telephone: One 1" conduit with pull string only from Landlord's common area telephone terminal (backboard) to the Premises. Tenant shall provide and install all wiring and equipment for distribution within the Premises.

(c) Gas: Natural gas Piping shall be provided by Landlord for gas service to the HVAC unit, if applicable, and future connection stubbed outside the Premises on the roof. Any additional gas piping to increase the service shall be at Tenant's expense. Gas service is provided and billed by the Landlord directly. Tenant is responsible for cost either (i) at the time of turnover, or (ii) prior to the start of the Tenant's work, whichever is the earlier date.

(d) Water: One 2" water line with shutoff valve stubbed to the Premises for domestic cold water. Tenant may provide and install remotely read check meter. Tenant shall obtain approval from Landlord on the location of the check meter prior to installation.

(e) Sewer: One 4" sanitary line and one 4" grease waste line to the Premises connected to an exterior common exterior grease trap.

(f) Landlord may elect to provide utilities directly to tenants via a "master meter", with or without sub-metering the individual tenant spaces. In such event, Tenant will be billed, directly by Landlord for electricity, gas, or such other utility as Landlord elects to supply.

7. **Heating, Ventilating and Air Conditioning (HVAC)** – Landlord shall provide up to one (1) 3-ton HVAC unit and curb on rooftop above Premises. The Rooftop Unit will be powered from Landlord's house panel. Tenant shall own and maintain the Rooftop unit.

Tenant is responsible, at Tenant's expense, for providing ductwork and its installation; providing any additional HVAC equipment and its installation; and meeting all the necessary code requirements. Tenant must use Landlord's roofing contractor for all roof penetrations and Landlord's approved contractors for all HVAC installations per Landlord specifications, at Tenant's expense. HVAC will be controlled by Landlord. Any repairs or failed installations resulting from incomplete or inadequate installation shall be the Tenant's responsibility. Please refer to Landlord's Requirements for Food Court Design and Construction, as well as item #9 listed under Tenant's Work, below.

Tenant is required to use a GREASE EXHAUST ROOF PROTECTOR model: TBD by exhaust size - G2 Grease Guard as manufactured by Rooftop Defense Systems. www.rooftopsolutions.com.

8. **Fire and Sprinkler System and/or Fire Alarm System**

(a) An automatic fire sprinkler system and/or fire alarm system shall be provided to the extent required by, and in accordance with standard raw shell building practices, and the requirements of any applicable building codes, local ordinances and the underwriting authority selected by Landlord. Tenant is responsible for and required to pay for all alterations and/or additions to the Fire Sprinkler System and/or Fire Alarm System, including but not limited to: extra sprinkler heads, hood detectors, any chemical suppressant (Ansul System), re-routing or re-piping of sprinkler lines, etc.

(b) If any work is performed by the Tenant or at the Tenant's request in or about the premises (i) modifies or affects the layout of the sprinkler or fire alarm system, (ii) decreases the protection such system affords the premises or the building, or (iii) increases the insurance rate on the premises or the building, Tenant shall pay for all alterations and/or additions to the sprinkler and/or fire alarm system required to make such system afford the premises, building, and all other buildings in the shopping center the same fire protection originally provided and to meet the requirements of any applicable building codes, local ordinances and Landlord's underwriting authority. Tenant and/or its contractor(s) shall make every reasonable effort to minimize impacts to the mall and/or other Tenants when altering the sprinkler and/or fire alarm system. ALL SPRINKLER AND/OR FIRE ALARM SYSTEM ALTERATIONS AND/OR ADDITIONAL WORK MUST BE PERFORMED BY LANDLORD'S SPRINKLER AND/OR FIRE ALARM CONTRACTOR AT TENANT'S EXPENSE.

(c) All sprinkler plans are subject to the review and approval of Landlord's sprinkler consultant, for which Tenant will be charged a one-time review fee.

9. **Roof Work** – Any work on the roof structure or membranes/materials must be performed by Landlord's roofing contractor at Tenant's expense.

10. **Lease Outline Drawing** - Landlord shall furnish Drawings with elevation for Tenant's architectural design and engineering.

11. **Construction Barricades** - Landlord shall furnish and install construction barricades as required by Landlord and described in Landlord's Requirements for Food Court Design and Construction. Tenant is responsible for the removal of the barricade as well as the patching and repairing of all the affected walls and surfaces due to the removal of said barricade. This will only be enforced if tenant is not ready to open at Grand Opening, and is under construction at that time.

B. TENANT'S WORK

Tenant shall perform all other items of work at Tenant's expense in accordance with Tenant's final plans and specifications, as approved by Landlord. Tenant's Work shall include, but shall not be limited to, the purchase, performance and installation of the following items. Tenant's Work shall include all necessary architectural, engineering or design related fees, code related items, permits, special assessments, sewer and water fees, impact fees or taxes relating to Tenant's Work. Furthermore, Tenant's Work shall be designed to comply with the Food Court Design Control, Section C below, and Landlord's Requirements for Food Court Design and Construction.

1. **Signs** - Tenant shall fabricate and install at the Tenant's expense, suitable identification sign or signs of such size, design and character as Landlord shall designate and/or approve. All signs shall be in accordance with the Food Court Design Control established by the Landlord and shall be installed prior to tenant opening at a place or places designated by the Landlord. Tenant shall also be responsible for all labor and costs associated with installing junction box and/or time clock for Tenant's sign(s). Tenant shall submit for Landlord's approval one (1) shop drawing at least 75 days prior to the scheduled opening of the Shopping Center. SIGNAGE PLANS WITH SPECIFICATIONS FOR SIGNS SHALL BE SUBMITTED FOR APPROVAL BY LANDLORD AND PERMIT TO BE OBTAINED FROM LOCAL/STATE JURISDICTION BEFORE FABRICATION. (See Landlord's Requirements for Food Court Design and Construction for sign extents).

2. **Concrete Slab** – Tenant shall be responsible for placing 4,000 psi non-air entrained concrete with maximum .44 water/cement ratio and for providing under slab waterproof membrane. Fiber mesh to be incorporated into the concrete prior to pouring of the slab. Tenant is responsible to repair any punctures in the slab waterproof membrane per the Tenant Handbook for Stego membrane installation details. Saw cut control joints by standard or Soff-cut system; Tenant must verify in writing with the Landlord's Architect that the layout of concrete control joints are within project criteria. (See Landlord's Requirements for Food Court Design and Construction).

3. **Interior Partitions** – Tenant shall be responsible for any and all interior partitions including any stockroom partition and exit corridor, if required, as well as any and all drop walls, curtain walls, lowered ceilings, soffit areas, light covers, store fixtures, furnishings and accessories. Drops, soffit areas, and curtain walls shall not be suspended from roof bar joists, unless reviewed and approved in writing by Landlord Architect. Drywall and finish provided by Tenant, except on the front Landlord side of the bulkhead area and on neutral pier. Tenant must install waterproofing 24" up the demising walls on top of a mold/mildew resistant drywall material. (See Landlord's Requirements for Food Court Design and Construction).

4. **Plans and Specifications** - NO WORK SHALL BE DONE ON THE PREMISES BY TENANT UNTIL LANDLORD HAS APPROVED TENANT'S PLANS IN WRITING. Tenant shall prepare plans and specifications from Landlord's L.O.D. (Lease Outline Drawing) for the interior improvements to the premises showing in detail the nature and scope of work to be done by Tenant. Drawings, specifications, and samples must be submitted to the Landlord as follows:

   A) Preliminary Drawings: Four sets of black or blue line prints.
   B) Final Working Drawings:
      a) Four sets of black or blue line prints.
      b) Specifications not included on drawings shall be submitted on 8 1/2" X 11" paper in booklet form. Sample boards are not returnable.
      c) Electronic files in AutoCAD and .PDF format scanned to full scale.
   C) As-builts: Tenant shall provide 1 digital copy (AutoCAD or .PDF, format)

5. **Tenant Contractor** - NO WORK SHALL BE DONE ON THE PREMISES BY TENANT UNTIL LANDLORD HAS APPROVED TENANT'S PLANS AND CONTRACTOR IN WRITING. Tenant's contractor shall work in conjunction with Landlord's building contractor so that Tenant's contractor does not interfere or delay the construction process of Landlord's building. Tenant's contractor must perform the work in such a manner as not to cause harm to Landlord's Work, affect other Tenants or other Tenant contractors, delay the progress of such work or create conflicts with labor organizations. Landlord reserves the right to cause the removal of the Tenant's contractor if any such conflicts arise. Tenant's contractor must keep the area, HVAC System and restroom clean and free of dust and debris, with a minimum of noise and interruption other Tenants and to the common areas of the project. Tenant's contractor is responsible for keeping interior and exterior areas clean of construction debris at all times. If the Tenant contractor fails or refuses to keep these areas clean at all times, Landlord reserves the right to clean these areas, and Tenant will be responsible for all costs incurred. Tenant's contractor shall erect temporary partitions, dust barriers, etc. as required by Landlord to minimize impact of construction activities on the common areas of the project.

6. **Permit**: Tenant's Work must comply with all applicable building codes and local ordinances for Tenant's Work. Tenant shall be responsible for securing, at its expense, all required permits before commencing work. Tenant shall also be required to meet all local energy regulations, at Tenant's expense, should improvements require such a revision.

7. **Utilities**:

(a) Electrical – Tenant shall provide and install all wiring, distribution panels and transformer. Tenant shall make application for electrical service in Tenant's name prior to start of Tenant's work, only if center is not master metered by the Landlord.

(b) Telephone – Tenant shall provide and install all wiring and equipment for distribution within the Premises.

(c) Gas – Tenant is responsible for confirming additional gas service availability with the local utility company and for all costs of installation of any required additional service, only if center is not master metered by the Landlord. Tenant responsible for all load requirements.

(d) Water – Tenant may provide and install remotely read check meter. Landlord shall approve the location of check meter.

(e) Sewer – Internal grease traps, if required, are responsibility of Tenant at Tenant's expense.

8. **Temporary Utilities/Trash Removal** - Prior to the commencement of Tenant's Work, Tenant shall make application to all appropriate utility companies and place all meters for the Premises in Tenant's name, if not Master Metered. Tenant is responsible for all utility charges for the Premises beginning with the official legal turnover date of the space from Landlord. If permanent power or telephone lines are not available for any reason at Tenant turnover, it is the responsibility of the Tenant Contractor to provide temporary construction power and/or temporary phone service (e.g., cellular service, etc.).

   The Tenant/Tenant Contractor will be responsible to contribute to the Landlord coordinated refuse service that will be established for the project. A one-time charge of $ 1.00 per square foot will cover costs of waste removal and said charge must be paid prior to commencing any on-site work. Tenant is responsible to deliver and place trash in the receptacles (Open Top Containers), which will be strategically placed in pre-determined areas. Tenant must use designated container areas for location of refuse and must keep surrounding areas free from debris and trash or Tenant will be subject to back charges.

9. **Heating, Ventilating & Air Conditioning (HVAC)** – ALL AND ANY HVAC INSTALLATION, TENANT MUST CONTRACT WITH LANDLORD'S APPROVED CONTRACTORS, PER LANDLORD SPECIFICATIONS.

   The Landlord criteria is as follows:

   1. Design suite to fully handle all loads within the suite. Additional CFM's are not to be provided from Landlord Common Areas, including Food Court seating area.

   2. Make up air fans shall be provided with all kitchen exhaust hoods. Make up air fans shall be sized to provide 90% of the total kitchen hood exhaust to maintain a negative pressure and contain cooking vapors from the Common Areas. Exhaust and make up air fans shall be located on the roof. Make up air fan intakes shall be located a minimum of 10'-0" away from kitchen hood exhaust or any other building exhaust on the roof. Make-up air fans must be wired to operate when the kitchen exhaust hood is turned on.

      a) Make up air fans and exhaust hood electrical connections (control relay): **By Tenant's Electrical Contractor at Tenant's expense**
      b) Provide and install grease guards and any additional roofing around exhausts per Landlord requirements concerning installation and manufacturer: **By Landlord's Roofer at Tenant's expense.**

3. HVAC Locations and weight limits are as follows:

   a) All other structural loads shall be limited to 400 lbs at any one location (exhaust fans, condensing units, etc): **Locations to be confirmed by Landlord's Project Architect/Engineer prior to Tenant installation.**
   c) Any/all structural support(s) framing necessary for HVAC systems: (RTU frames, hoods, exhausts): **By Tenant at Tenant's expense and confirmed by LL Architect/Engineer prior to Tenant fabrication and installation**
   d) Roof penetrations and repairs: (ducts, vents, conduits, roof curbs): **By Landlord's Roofing Contractor at Tenant's expense**
   e) Installing 3 ton rooftop unit and curb: (roof penetration and RTU flashing to be completed at same time as RTU install): **By Landlord**
   f) Installing other HVAC items: (fans, hoods, grease guards, condensing units): **By Tenant's Contractors at Tenant's expense.** *All curbs must be sized and installed to fit unit properly.*

4. Installation of HVAC systems is as follows:

   a) Roof penetration and RTU flashing, any/all thermostat installation, control wiring, and start-up for Rooftop Unit must be provided and installed: **By Landlord**
   b) Any/all electrical wiring for Rooftop Unit must be provided and installed: **By Landlord's Electrical Contractor at Landlord's expense.**
   c) Rooftop Unit commissioning and air balance report must be provided: **By Tenants Mechanical Contractor at Tenant's expense at end of construction.**
   d) Other HVAC items: (ductwork, vents, fans, etc.): **By Tenant's Contractors at Tenant's expense.**
   e) All fire alarm connections: **By Landlord's Fire Alarm Contractor at Tenant's expense**

10. **Deliveries** - Access to Service Corridors for the delivery, loading, and unloading of materials must be coordinated with the on-site project management. Specific routing will be designated at that time. At no time is it permitted or allowed for any common area to be utilized for storage or any other use.

11. **Special Requirements for Roof Penetrations** - Any work, including cutting, venting, or duct installations, which involves cutting into, or penetrating in any manner, the existing roof structure and/or roofing material MUST BE PERFORMED BY LANDLORD'S ROOFING CONTRACTOR AT TENANT'S EXPENSE. Tenant shall not permit his contractor or any subcontractor to perform such work. Tenant shall be liable for all damage resulting from unauthorized roof penetrations and their consequent effect on the integrity of the roof and its guarantee by the Manufacturer or Contractor.

12. **Special Requirements for Wall Building Perimeter Wall Penetrations** - Any work, including cutting, drilling which involves cutting into, or penetrating in any manner, the exterior walls shall be waterproofed per the requirements of this handbooks exhibits to maintain the waterproof integrity of the wall assembly.

13. **Special Requirements for Building Slab Grade Cutting and Patching** - Any work which involves penetration of the building slab, shall be repaired per the replacement details and methods contained in these standards including the patching of the Stego waterproof sub-slab vapor membrane.

14. **Insurance** - Tenant should make early arrangements with an insurance company to provide the coverage required within the lease. **PRIOR TO THE START OF TENANT'S WORK, LANDLORD MUST RECEIVE THE CERTIFICATE OF INSURANCE REQUIRED UNDER THE LEASE. TENANT CONTRACTOR MUST FURNISH CERTIFICATE OF INSURANCE AS WELL.** Insurance requirements for Tenant contractors are illustrated in the "Landlord Provided" Tenant Handbook obtained from the Landlord's Tenant Manager.

15. **Bonds or Other Security** - Landlord shall have the right to require Tenant to furnish payment bond or other security in form satisfactory to Landlord for the prompt and faithful payment of all costs and expenses incurred in the performance of Tenant's Work. Tenant shall be responsible for promptly discharging any mechanics' liens recorded against the Shopping Center.

16. **Certificate of Occupancy** - Upon completion of Tenant's Work, Tenant shall provide Landlord with a copy of the Certificate of Occupancy issued by the appropriate governmental agency for occupancy of the premises within fifteen (15) days of receipt.

C. DESIGN CONTROL

1. **Counter Front —Public & Non-Public Areas**: The counter front area is defined as any area which is in full view of the public. This is referred to as the "Design Control Zone." Tenant shall pay particular attention to the visual and physical organization of the serving area. Attention must also be given to design of temporary signage, displays, uniforms, etc… Therefore, all areas exposed to the public view are subject to Landlord's approval. By contrast, the non-public area of the Tenant's space shall be defined as the areas that are not accessible to the public and are shielded from public sight lines. Tenant is responsible for all finishes and construction within Tenant's entire demised space, unless noted otherwise herein. See Landlord's Requirements for Food Court Design and Construction.

2. **Counter Front Components and Finishes**:

(a) The Landlord will provide a finished neutral pier, metal stud demising wall, front counter knee wall, including signage bulkhead.

(b) The Landlord will provide finish floor material on the floor, forward of the counter front toe space (occurs at the Tenant side of the Lease Line) to the Tenant's lease line at the Tenant's expense. Floor material to be of the Landlord's choosing and at the Landlord's discretion. **Lease line is considered to be at front edge of bulkhead. Tenant's countertop on customer side is not to extend past bulkhead. See Landlord's Requirements for Food Court Design and Construction.**

(c) Tenant shall construct a counter along the entire front of their lease space. The counter front shall be framed and finished by the Tenant. No portion of the counter front may extend beyond the Lease line into the Common Area.

(d) Tenant counter construction shall follow the profile, elevation, dimensions, and materials specified in the Typical Food Tenant drawings included herein.

(e) Approved countertop and counter front materials must adhere to Landlord requirements.

(f) Tenant must provide within the front counter an area to contain neatly stacked serving trays. Area to hold at least thirty, (30) trays, 24" x 12".

(g) All back counters and cabinets in the same area must be of premium quality laminate, metal and/or solid surface materials to coordinate with the front counter. Paint grade cabinetry and fake wood laminates are prohibited.

(h) Rear wall of Tenant's public area shall be finished in glass tile, ceramic tile, stainless steel, and/or solid surfacing material in colors and pattern to be approved by the Landlord. Any alternate materials may be submitted to the Landlord for review/approval. No fiberglass reinforced panels (FRP) will be allowed on any wall that the public can view.

(i) All equipment, sneeze guard, appliances, condiment dispensers, straw holders, etc… in the public service area must be built into the counter as to appear custom integrated.

(j) Landlord to determine and to have final review/approval of all countertop and/or base finishes materials.

3. **Equipment & Enclosures**

(a) All foodservice equipment must be recessed and built-in to cabinetwork and fully integrated in the design of the space.

(b) Tenant will not be permitted to install kitchen exhaust hoods in front of the menu-board.

(c) Sneeze guards are required over uncovered foods as per local health codes and shall meet the following criteria:

i. Sneeze guards shall compliment the character of the design.
ii. Acceptable assemblies for glass sneeze guards include butt-glazed (frameless), segmented metal clip connectors, polished, brushed or powder-coated round metal tubing. Square metal tubing and plastic or Plexiglas panels will not be permitted.

(d) If a closure is required, it must be concealed during business hours. Track or door guide must not be visible at any time. Tenants may use roll up grilles, but lockable storage units are preferred. Structural metal stud framing in the demising wall shall support roll up grilles.

4. **Lighting Criteria** - Primary lighting shall be arranged to highlight the food displays, with secondary lighting providing the general lighting. Quartz PAR lamps of low-voltage halogen sources are recommended for their intense light and high color rendition.

(a) Tenant shall install lighting, subject to final approval by the Landlord, along counter front to illuminate counter and food displays.
(b) The following light sources will not permitted within the public counter area:
i. HID Lamps
ii. Standard Fluorescent tube lighting
iii. Twinkle lights, strings, or shadow chaser theatrical lighting.

(c) Neon and LED is considered an acceptable secondary light source within the Tenant's counter front area.
(d) Tenant must submit lighting cut-sheets and lamp specification for Landlord approval.

5. **Sign Criteria** - Tenant shall have the opportunity to design and install signage. Inside the food court area the Tenant has a primary sign location over the counter front and may incorporate both name and logo onto menu boards and secondary signage. Additional signs for feature displays are allowed, but must be incorporated into the design of the store. Temporary signage must be carefully designed and conceived to present a high quality image to the shopper. Food court Tenant must meet the following criteria for interior signage and graphics:

(a) Primary Identification Sign: Tenant shall provide, at their expense, a primary sign over the approach aisle to the counter (see elevation.) The sign shall be of an approved design of neon letters and detail.

i. Signage must be limited to trade name and logo.
ii. Signs shall be lit by a neon tube w/in open channel letters, or used indirectly behind cut-out letters.
iii. Landlord encourages creative use of neon.

(b) No photo transparency illuminated boxes are permitted.

(c) No signage promoting brand name consumer goods or national product trademarks will be accepted (i.e. 'Drink Dr. Pepper', etc…) Soft drink company coolers are not permitted.

(d) Tenant menu boards should orient to the customer and can be wall mounted on the rear wall of the serving area or, in the event that exhaust needs are located over the back counter, directly in front of the exhaust hoods.

(e) Menu Boards:

i. Sign boards displaying items and prices shall be innovative and professionally executed.

ii. Permanent information shall be silk-screened, etched, painted or mounted to a baseboard of metal wood, plastic laminate, acrylic, or glass. Flimsy or fragile materials are not permitted.

iii. Hand-written changeable information is not permitted.

iv. Internally illuminated menu boards are acceptable if they have a black face with white (reversed) lettering. Design of this type of menu board is subject to approval by Landlord.

v. Chalkboards used for menu boards are not permitted.

vi. Menu boards of (1) plastic, rubber or felt "channel" type boards with individual interchangeable plastic letters, or (2) those available through national food and beverage companies advertising products are strictly prohibited.

6. **Aprons, Hats, and Shirts** - The use of aprons, hats, and shirts with the store's name or logo will compliment the Tenant's store design and promote a spirit of teamwork among employees. Expensive uniforms are not necessary to communicate a professional image to customers.

7. **Refuse Storage and Collection** - Tenant is responsible for bagging all trash before removing it from Tenant's space (using heavy-duty plastic bags) and removing all refuse within their space each day. Tenant shall be provided a rear service door and may remove trash as needed throughout the day using that door. Food Court dumpsters shall be provided by Landlord at Tenant's expense as part of the CAM costs.

8. **Walls, Partitions and Doors** -

(a) Tenant shall install and finish a **full height demising wall partition, consisting of** 5/8" drywall over existing demising wall studs and partitions except as instructed by the Tenant Improvement Coordinator.

(b) Tenant shall finish all walls in food service areas with non-porous materials as per local health code.

(c) One (1) Service door measuring 3'0" x 7'0" shall be installed by Landlord at rear of Tenant space where possible. Tenant must verify location and dimensions on site, as rear door cannot be relocated.

(d) Non-public areas are to be accessed by a full-size self-closing "Eliason"-type door. Provide complete spec with finishes.

9. **Ceiling -**
   (a) Ceiling finish throughout the Tenant space shall be non-porous as per local health code requirements.
   (b) Ceilings within the counter front area must be drywall with a washable surface and conform to the profile shown herein. No lay-in ceilings will be permitted in the counter front area.
   (c) Washable lay-in modular tiles are permissible in the non-public areas of the Tenant space only, and shall not be visible from the counter front area. Lateral bracing for suspended ceiling must be provided per Code.
   (d) All access panels must be provided by Tenant and shall be constructed to remain inconspicuous to public view.

10. **Floor –** Floor finish in public view shall be non-slip quarry tile, selected, installed and paid for by the Tenant and approved by the Landlord.

D. TENANT SUBMISSION REQUIREMENTS

Tenant shall provide complete working drawings and specifications for the construction of the leased premises for Landlord's written approval prior to starting construction. Drawings, specifications, and samples must be submitted to the Tenant Improvement Coordinator as follows:

(a) (Submission 1) Preliminary Drawings: Must be submitted no later than 30 days after receipt of the Food Court Design Control package. The purpose of this phase is to acquaint the Landlord with Tenant's intentions and to catch and correct as many design criteria problems as possible before the working drawing phase. Tenant will be notified within fifteen (15) days of receipt of preliminary drawings of acceptance, rejection, or items requiring corrections and/or alteration. Drawings shall include the following information at a minimum (additional information is encouraged.)
   i. Key Plan showing location of space within center.
   ii. Preliminary Floor Plans (scale: ½" = 1'0".)
   iii. Typical Interior Elevations (scale: ½" = 1'0".)
   iv. Store Elevation and Section, including any graphics and signage. Indicate all materials and finishes (scale: ½" = 1'0".) Include front counter elevations and sections including location of graphics, display features, and food presentation concepts, as well as flow diagram (illustrating customer sequence.)
   v. Preliminary Finish Schedule.
   vi. Preliminary Menu Outline.

(b) (Submission 2) Final Working Drawings-- Final working drawings showing all detail as submitted for plan check and to Contractor for construction, shall include:

i. Key Plan showing location of space within center.

ii. Floor plans (scale: ½" = 1'0") indicating storefront construction materials, colors, and finishes, locations of partitions and type of construction, placement of merchandising fixtures, and toilet room locations (if required by code) indicating placement of plumbing fixtures.

iii. Reflected Ceiling Plans (scale: ½" = 1'0"), indicating locations of all accent lighting fixtures, manufacturer information, catalog number, and lamps to be used.

iv. Store Elevation and Section, including graphics and signage. Indicate all materials and finishes (scale: ½" = 1'0"). Include front counter elevations and sections including location of graphics, display features, casework details, materials, colors of finishes, food presentation concept, and flow diagram.

v. Interior Elevations, Sections, and Details sufficient for construction (scale: ½" = 1'0").

vi. Complete Interior Finish and Fixture Schedule.

vii. Signage shop drawings (scale: ½" = 1'0") indicating elevation and section views, lettering style and size, all colors and materials, methods of illustration, color of illuminate and voltage requirements. Food Tenant to include menu board details, as well as proposed method of temporary signage (sales, daily or weekly specials) including location, size, materials, color, lettering type, and framing method.

viii. Complete set of Mechanical, Electrical, HVAC, Plumbing and Sprinkler Drawings.

ix. Drawings must indicate connected electrical loads, weights of heavy equipment, cases, etc…

x. Specifications not on the drawings should be submitted on 81/2" x 11" booklets. Four (4) sets.

xi. Include catalog cut-sheets of equipment with full dimensions, mechanical, electrical, and plumbing requirements. All equipment must be National Sanitation Foundation (NSF) approved and in new condition.

xii. Final Menu, complete with all food and drink items.

xiii. Include exhaust riser diagram from hood to roof. Included on this drawing are access panels, hanging details, fire rating wraps, etc…

xiv. Include kitchen hood shop drawings and hanging details.

xv. Include modifications to the building fire alarm system.

xvi. **PRIOR TO TENANT CONTRACTOR STARTING CONSTRUCTION, provide Tenant Management with signed and sealed drawing(s) by State Licensed Structural Engineer for all roof top equipment and equipment supported by structural joists, including hoods. Drawing(s) to include location of units on structural steel, structural supports, and operating weights of all units. Allow at least 10 days for Landlord review and approval.**

E. **BUILDING CODES** Tenant's Work must comply with all applicable building codes and local ordinances for Tenant's portion of the project. Tenant shall be responsible for securing all required permits before commencing work and must post copy of permit with Landlords on-site project management office. Tenant shall also be required to meet all local energy regulations, at Tenant's expense, should improvements require such a revision. Tenant to confirm codes in place at time of plan submittal.

F. **LANDLORD'S REQUIREMENTS FOR FOOD COURT DESIGN AND CONSTRUCTION**. Tenant shall refer and comply to "Landlord's Requirements for Food Court Design and Construction" for additional detail regarding construction/design in the Food Court. Landlord's Requirements for Food Court Design and Construction shall be made available to Tenant or Tenant's architects/contractors at Tenant's request, and may also be accessed through Landlord's website at **http://business.simon.com/leasing**.