FXV Closed Circuit Cooling Towers

TABLE OF CONTENTS

C11 FXV CLOSED CIRCUIT COOLING TOWERS

C13 BENEFITS

C15 CONSTRUCTION DETAILS

C17 CUSTOM FEATURES & OPTIONS

C29 PERFORMANCE DATA

C31 ENGINEERING DATA

C38 STRUCTURAL SUPPORT

BAC's FXV is the most efficient closed circuit cooling tower in the industry. The FXV reduces the total cost of ownership by bringing you optimized selections based on footprint, horsepower, pressure drop and price. Offering dependable year-round operation, easy maintenance, and easy installation, this unit delivers the most cost-effective solutions in cooling a variety of fluids for the commercial, industrial, and power process markets.

TriArmor® Corrosion Protection System

IBC Compliant

EVERTOUGH™ CONSTRUCTION

BAC's FXV Single Air Intake:
Leading the Industry in Efficiency

Designed for Small to Large Tonnage Requirements
29 to 424 Nominal Tons in a Single Cell
Up to 3,600 USGPM for Process Applications

- Easy Maintenance
- CTI Certified with Water and Glycol
- Flexible Configurations
- Low Environmental Impact
- Durable Construction

FXV Benefits

Low Environmental Impact

ENERGY EFFICIENT

- Capacity is certified by the Cooling Technology Institute using water, ethylene glycol, and propylene glycol
- All units meet or exceed ASHRAE Standard 90.1 energy efficiency requirements
- Patented Advanced Coil Technology reduces evaporation directly off the coil and minimizes the potential for scaling and fouling, maintaining capacity
- Closed loop cooling process further reduces fouling, maintaining process efficiency
- Premium efficient/inverter duty fan motors and high efficiency pumps are standard
- Variety of coil configurations and HP options to minimize system energy use
- Independent fan operation (option)

SOUND REDUCTION OPTIONS

- Standard fan is low sound and high efficiency
- Particularly sound sensitive installations can be accommodated by facing the quiet blank-off panel to the sound sensitive direction
- For further reduced sound levels, Low Sound Fans, Whisper Quiet Fans, and sound attenuation are available (optional)

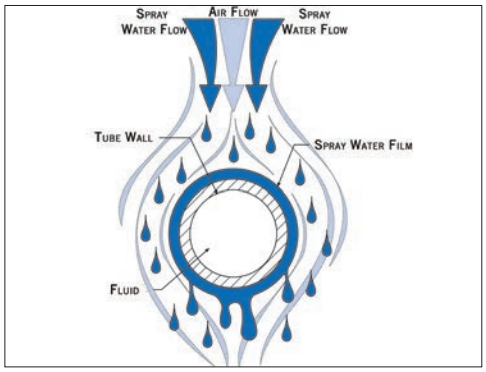

Patented Advanced Coil Technology

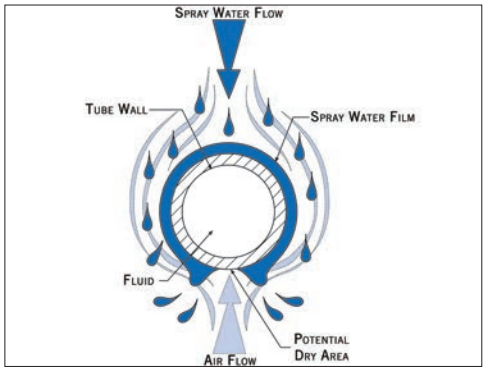

Conventional Coil Technology

Low Installation Costs

- Reduced weight simplifies rigging and reduces support steel costs
- Modular design reduces installation time
- Minimal coil connections reduces piping costs
- Reduced glycol charge
- Designed to mount directly on existing steel support
- Factory pre-assembled platforms allow quick field assembly (option)

Modular Design Simplifies Rigging

Reliable Year-Round Operation

- **BALTIDRIVE® POWER TRAIN FAN SYSTEM**
  - No minimum fan speed is required
- Cooling tower duty motors designed for hostile environments

Durable Construction

- Meets wind and seismic requirements of the International Building Code (IBC)
- Designed to withstand wind loads of up to 167 psf
- Seismically verified through dynamic shake table testing up to a S_{DS} of 2.40g
- Enhanced longevity with a variety of durable materials of construction (see **page C17** for details)

Easy Maintenance

- Crossflow configuration provides direct access for easy maintenance to the cold water basin, spray distribution system, coil, and drive system
- Spray distribution system is easy to inspect while the unit is operating
- Hinged access doors and standard internal walkway provide easy access to the unit's cold water basin, drift eliminators, fan drive system, and heat transfer coil
- Combined inlet shields smooth airflow for optimal thermal performance and block sunlight in locations susceptible to algae growth
- Fill surface is elevated to facilitate flushing of the dirt and debris from critical areas
- Motor removal system facilitates motor replacement (option)

BALTIDRIVE® Power Train Fan System

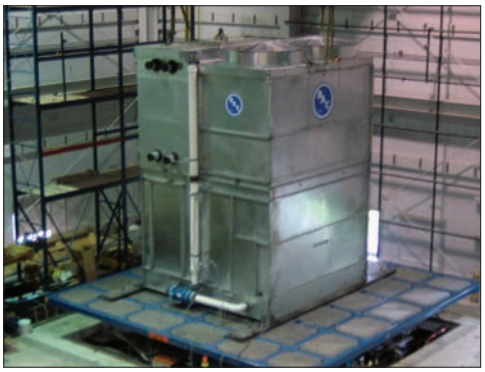

Shake Table Tested

Motor Removal System

FXV
Construction Details

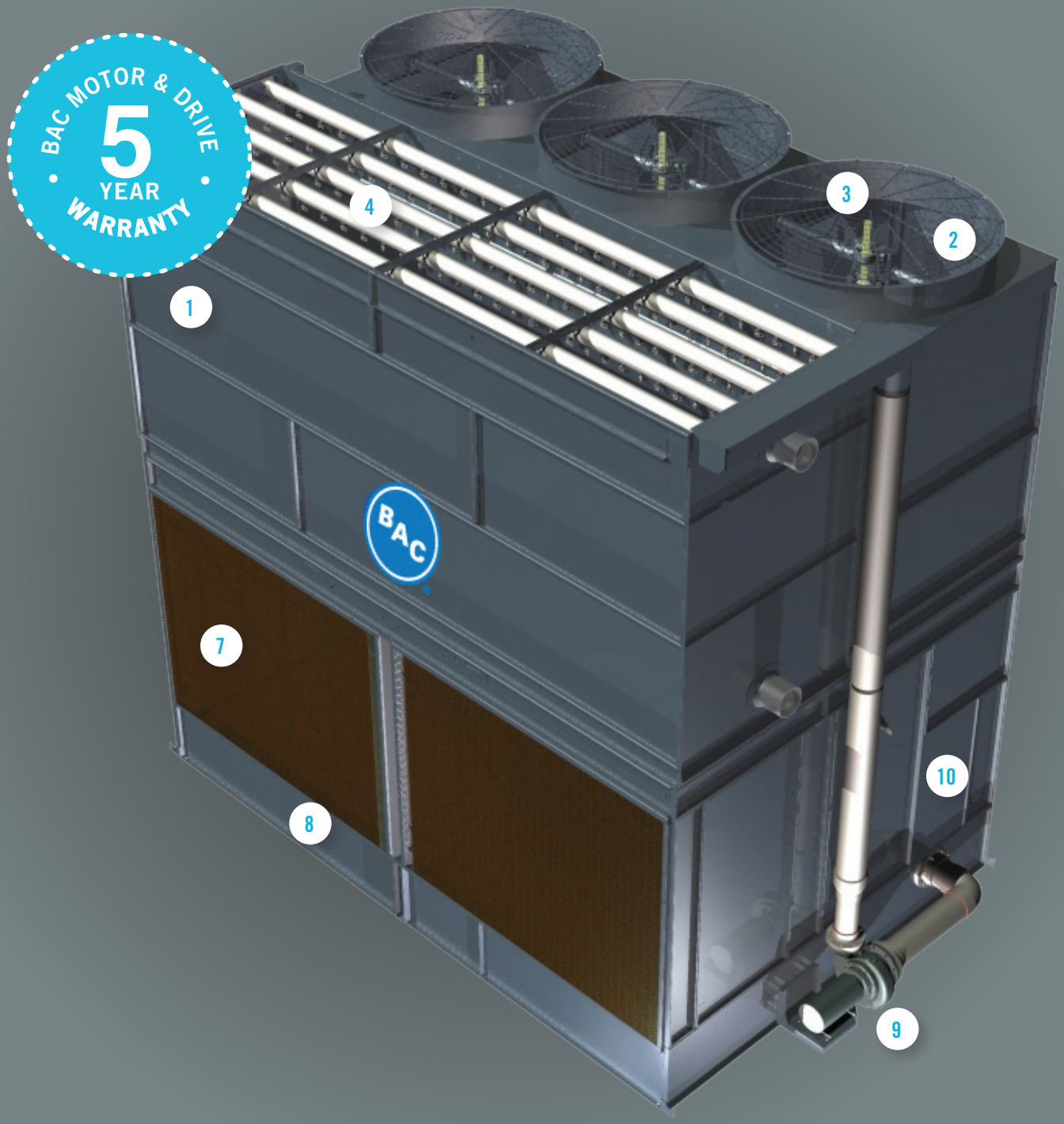

1 Heavy-Duty Construction

- G-235 (Z700 metric) mill galvanized steel panels
- Shake tested with a S_{DS} seismic rating up to 2.40g at grade
- Designed to withstand wind loads of 167 psf
- Meets seismic and wind requirements for International Building Code

2 BALTIDRIVE® Power Train

- Premium quality, solid-backed, multi-groove belt
- Corrosion resistant cast aluminum sheaves
- Heavy-duty bearings L_{10} 80,000 hours
- Premium efficient/inverter duty motors are standard
- 5-year motor and drive warranty

3 Low HP Axial Fan(s)

- Quiet operation
- High efficiency
- Corrosion resistant aluminum

4 Water Distribution System

- Visible and accessible during operation
- Overlapping spray patterns ensure proper water coverage
- BAC 360™ Spray Nozzle, large non-clog orfice

5 Coil Section (NOT SHOWN)

- Continuous serpentine, steel tubing
- Hot-dip galvanized after fabrication (HDGAF)
- Pneumatically tested at 375 psig
- Sloped tubes for free drainage of fluid
- Fabricated per ASME B31.5 standards
- When required, orders shipping into Canada are supplied with a CRN

6 BACross® Fill with Integral Drift Eliminators (NOT SHOWN)

- High efficiency heat transfer surface
- Recyclable polyvinyl chloride (PVC)
- Impervious to rot, decay, and biological attack
- Flame spread rating of 5 per ASTM E84
- Elevated off the cold water basin

7 Combined Inlet Shields

- Corrosion resistant
- UV-resistant finish
- Maintenance free
- Reduces sunlight and algae growth

8 Cold Water Basin

- Sloped cold water basin for easy cleaning
- Suction strainer with anti-vortex hood accessible from internal walkway
- Standard internal walkway

9 Recirculating Spray Water Pump

- Close coupled, bronze fitted centrifugal pump
- Totally enclosed fan cooled (TEFC) motor
- Bleed line with metering valve installed from pump discharge to overflow

10 Hinged Access Doors

- 24”W x 45”H hinged access doors
- Inward swinging door on each end wall
- Opening to a standard internal walkway

FXV Custom Features & Options

Materials of Construction

Determining the appropriate material of construction for a project depends on several factors, including water quality, climate and environmental conditions, availability of time and manpower for maintenance, unit lifetime requirements, and budget. BAC provides the widest variety of material of construction options in the industry and has the ability to provide a solution to meet all conditions and budgets. Options such as the TriArmor® Corrosion Protection System and EVERTOUGH™ Construction provide superior corrosion resistance and durability at a tremendous value.

Standard Construction Installation

Customer Valued

STANDARD CONSTRUCTION

G-235 mill galvanized steel is the heaviest commercially available galvanized steel, universally recognized for its strength and corrosion resistance. To assure long-life, G-235 mill galvanized steel panels and structural members are used as the standard material of construction. The standard construction has been seismically verified by shake table testing in an independent laboratory up to an S_{DS} of 2.40g and can withstand wind loads of up to 167 psf, proving its construction is designed for extreme durability. With proper maintenance and water treatment, G-235 galvanized steel will provide an excellent service life under the operating conditions normally encountered in comfort cooling and industrial applications.

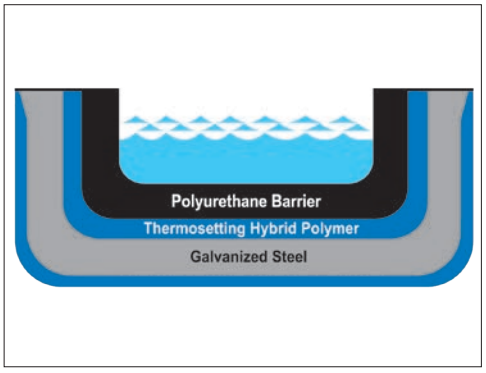

TriArmor® Corrosion Protection System Triple Layer Protection of the Cold Water Basin

Customer Valued

TRIARMOR® CORROSION PROTECTION SYSTEM (OPTION)

The TriArmor® Corrosion Protection System consists of heavy gauge G-235 galvanized steel panels fully encapsulated by a thermosetting hybrid polymer and further protected by a polyurethane barrier applied to all submerged surfaces of the cold water basin. The triple layers of protection form a completely seamless cold water basin for the most leak resistant and durable basin in the industry. Other components, such as the strainer, within the basin will be constructed of Type 304 Stainless Steel. The TriArmor® Corrosion Protection System was specifically designed for evaporative cooling applications and released in 2006 after a decade of extensive R&D and field testing. To date, there are over 1,000 successful installations in North America. Every basin is leak tested at the factory and warranted against leaks and corrosion for 5 years.

Application of TriArmor® Corrosion Protection System

EVERTOUGH™ CONSTRUCTION (OPTION)

EVERTOUGH™ Construction combines the most corrosion resistant materials to provide the best value in corrosion protection for most water chemistries. EVERTOUGH™ Construction is backed by a comprehensive Louver-to-Louver℠ 5-year warranty which covers ALL components from the fan to the cold water basin, from louver to louver, including the motor.

- Specifically, the following materials are used in EVERTOUGH™ Construction:
  - The cold water basin is constructed with the TriArmor® Corrosion Protection System. The basin is leak tested at the factory and warranted against leaks and corrosion for 5 years.
  - Designated steel components above the cold water basin are constructed of heavy-gauge G-235 galvanized steel and further protected with a thermosetting hybrid polymer.
  - The distribution system is non-corrosive Schedule 40 PVC.
  - Other components such as the strainer, within the basin will be constructed of Type 304 stainless steel.

EVERTOUGH™ Construction Installation

THERMOSETTING HYBRID POLYMER (OPTION)

A thermosetting hybrid polymer, used to extend equipment life, is applied to select G-235 mill galvanized steel components of the unit. The polymerized coating is baked onto the G-235 mill galvanized steel and creates a barrier to the already corrosion resistant galvanized steel. The thermosetting hybrid polymer has been tested to withstand 6,000 hours in a 5% salt spray without blistering, chipping, or loosing adhesion.

STAINLESS STEEL (OPTION)

Several Type 304 stainless steel material of construction options are available.

- **WELDED TYPE 304 STAINLESS STEEL COLD WATER BASIN**
  A Type 304 welded stainless steel cold water basin is available. All steel panels and structural members of the cold water basin are constructed from Type 304 stainless steel. Seams between panels inside the cold water basin are welded, providing an advantage over bolted stainless steel cold water basins for minimizing susceptibility to leaks at basin seams. The basin is leak tested at the factory and welded seams are provided with a 5-year, leak-proof warranty.
- **ALL TYPE 304 STAINLESS STEEL CONSTRUCTION**
  Steel panels and structural elements are constructed of Type 304 stainless steel. Seams between panels inside the cold water basin are welded. The basin is leak tested at the factory and welded seams are provided with a 5-year leak-proof warranty.

Welded Type 304 Stainless Steel Cold Water Basin

FXV Custom Features & Options

Coil Configurations

BAC offers a large selection of coil configuration options to fulfill any thermal and pressure drop requirements.

STANDARD SERPENTINE COIL

The standard cooling coil is constructed of continuous lengths of all prime surface steel. The coil is hot-dip galvanized after fabrication (HDGAF) to apply a thick zinc corrosion barrier over the entire exterior surface of the coil. The coil is designed for low pressure drop with sloping tubes for free drainage of fluid. Each coil is pneumatically tested at 375 psig (2,586 kPa) and is fabricated per ASME B31.5 standards to ensure the highest quality and integrity.

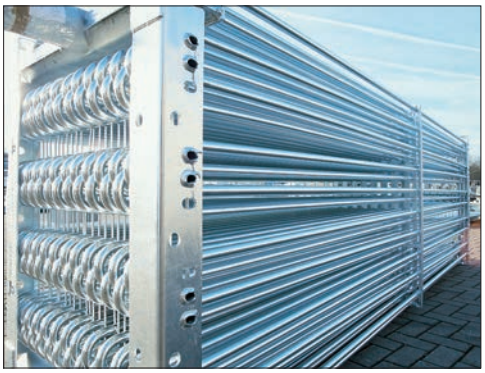

Standard Coil Construction

LOW PRESSURE DROP COIL DESIGNS (DUAL, TRI, QUAD, AND HEX)

Multiple coil configurations (Dual, Tri, Quad, and Hex) have been designed by BAC and are available to meet all system pressure drop requirements. A higher pressure drop across the coil requires greater system pumping energy and therefore increases operating costs. The Tri, Quad, and Hex coil configurations drastically reduce pressure drop with minimal impact on thermal performance.

Cleanable Header Coil

CLEANABLE HEADER COIL (OPTION)

The cleanable header tube bundle provides removable cover plates on the inlet and outlet header boxes to permit access to each serpentine tube circuit for solvent or air-pressure cleaning. Coil material options include carbon steel coils (hot-dip galvanized outside surface). Each coil is pneumatically tested at 125 psig (860 kPa).

STAINLESS STEEL COIL (OPTION)

Coils are available in Type 304 stainless steel for specialized applications. The coil is designed for low pressure drop with sloping tubes for free drainage of fluid. Each coil is pneumatically tested at 375 psig (2,586 kPa) and is fabricated per ASME B31.5 standards to ensure the highest quality and integrity.

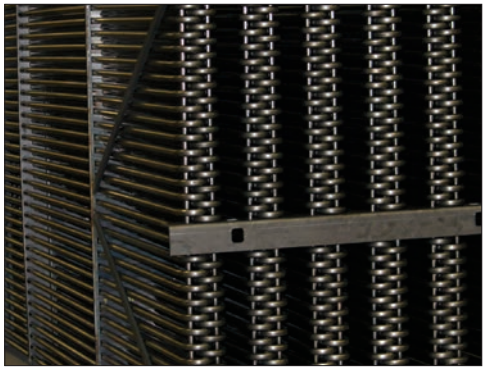

Stainless Steel Coil Construction

STRAIGHT-THROUGH CLEANABLE COIL (OPTION)

A header box with a removable cover plate at each end of the coil allows access to every tube end for mechanical cleaning or plugging. It is available in carbon steel (hot-dip galvanized inside and out). Each coil is pneumatically tested at 125 psig (860 kPa).

Straight-Through Cleanable Coil

ASME "U" STAMP COIL (OPTION)

The ASME coils are requested for heavy industrial or process applications. This serpentine coil is manufactured and tested in accordance with the ASME Boiler and Pressure Vessel Code, Section VIII, Division 1 and bears the ASME "U" stamp. ASME coils are hot-dip galvanized (outside surface) after fabrication (HDGAF). The coil is designed for low pressure drop with sloping tubes for free drainage of fluid. Each coil is pneumatically tested at 330 psig (2,275 kPa) and rated for a design pressure of 300 psig (2,068 kPa).

EXTENDED SURFACE (FINNED) COIL (OPTION)

Coils are available with half or all rows finned at 5 fins per inch for seasonal wet/dry operation. The fins increase the surface area of the coil, therefore increasing the heat transfer capability. The coil is hot-dip galvanized after fabrication (HDGAF) to apply a thick zinc corrosion barrier over the entire exterior surface of the coil and fins. BAC coils are designed for low pressure drops and to be completely drainable with sloping tubes for free drainage of fluid. Each coil is pneumatically tested at 375 psig (2,586 kPa) and is fabricated per ASME B31.5 standards to ensure the highest quality and integrity.

Multiple Circuit Coils

MULTIPLE CIRCUIT COILS (OPTION)

Split coil configurations are available to allow separate process fluid loops through the same unit. Separate loops may be needed for multiple applications requiring different temperature processes or multiple types of process fluids.

NOTE: A Canadian Registration Number (CRN) is required for all pressure vessels over 15 psig entering Canada. The CRN identifies that the design of a boiler, pressure vessel, or fitting has been accepted and registered for use in Canada. CRN is available for all BAC Dual and TriCoil configurations shipped into Canada.

FXV Custom Features & Options

Drive System Options

The fan drive system provides the cooling air necessary to reject unwanted heat from the system to the atmosphere. All BAC drive systems use premium efficient cooling tower duty motors and include BAC's comprehensive 5-year motor and drive warranty. Cooling tower duty motors are specially designed for the harsh environment of a cooling tower and have permanently lubricated bearings, drastically decreasing the maintenance requirement of the motor. BAC belt drive systems are the most durable and maintenance friendly drive systems on the market, including single nut adjustment for belt tensioning to make belt tensioning simple.

BAC MOTOR & DRIVE 5 YEAR WARRANTY

Customer Valued

STANDARD BALTIDRIVE® POWER TRAIN

The BALTIDRIVE® Power Train utilizes special corrosion resistant materials of construction and state-of-the-art technology to ensure ease of maintenance and reliable year-round performance. This BAC engineered drive system consists of a specially designed powerband and two cast aluminum sheaves located at minimal shaft centerline distances to maximize belt life. As compared to a gear drive system, this specially engineered belt drive system provides many advantages. The BALTIDRIVE® Power Train requires only periodic inspection of components and belt tensioning, which is simple with a single nut adjustment, and requires less downtime. Only fan bearing lubrication is required for routine maintenance. Belt drive systems also have the added advantage of being suitable for variable frequency drive (VFD) applications without requiring expensive optional accessories.

BALTIDRIVE® Power Train Fan System

Customer Valued

INDEPENDENT FAN OPERATION (OPTION)

Models FXV-0809, FXV-0812, and FXV-1212 are provided with one fan motor driving two fans. The FXV-0818, and FXV-1218 are provided with two fan motors driving three fans as standard. The independent fan option consists of one fan motor and drive assembly for each fan to allow independent operation, adding an additional step of fan cycling and capacity control. This ensures redundancy for the fan and motor system.

BALTIGUARD™ Fan System Provides Built in Redundancy

BALTIGUARD™ FAN SYSTEM (OPTION)

The BALTIGUARD™ Fan System consists of two standard single-speed fan motor and drive assemblies. One drive assembly is sized for full speed and load, and the other is sized approximately 2/3 speed and consumes only 1/3 the design horsepower. This configuration provides the reserve capability of a standby motor in the event of failure. As a minimum, approximately 70% capacity will be available from the low horsepower motor, even on a design wet-bulb day. Controls and wiring are the same as those required for a two-speed, two-winding motor. Redundant motors are available by increasing the size of the standby fan motor of the BALTIGUARD™ Fan System to the size of the main motor. This provides 100% motor redundancy and the greatest level of reliability.

BALTIGUARD™ Fan System Used for VFD Applications

BALTIGUARD PLUS™ FAN SYSTEM (OPTION)

The BALTIGUARD PLUS™ Fan System builds on the advantages of the BALTIGUARD™ Fan System by adding a variable frequency drive (VFD) to either the pony or the main motor, depending on system requirements. This offers the benefits of additional capacity control and energy savings, along with the redundancy offered by the BALTIGUARD™ Fan System. Alternatively, a VFD can be added to both the pony and main motor for complete capacity control and redundancy under any load.

Vibration Cutout Switch

VIBRATION CUTOUT SWITCH (OPTION)

A factory mounted vibration cutout switch is available to effectively protect against rotating equipment failure. BAC can provide either a mechanical or solid-state electronic vibration cutout switch in a NEMA 4 enclosure to ensure reliable protection. Additional contacts can be provided on either switch type to activate an alarm. Remote reset capability is also available on either switch type.

EXTENDED LUBRICATION LINES (OPTION)

Extended lubrication lines are available for lubrication of the fan shaft bearings. Fittings are located on the exterior casing panel next to the access door.

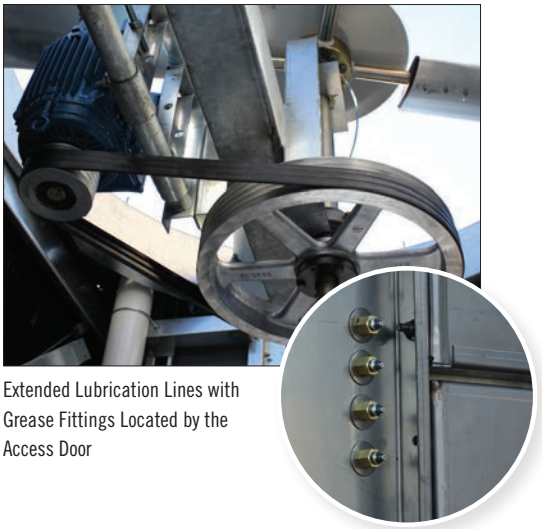

Extended Lubrication Lines with Grease Fittings Located by the Access Door

FXV Custom Features & Options

Cold Water Basin

The spray water collects in the cold water basin which is pumped back over the heat transfer coil. During operation, the FXV cold water basin eliminates any stagnant water zones, which are susceptible to biological growth.

STANDARD MECHANICAL WATER LEVEL CONTROL

Mechanical make-up valves must operate continuously in the moist and turbulent environment existing within evaporative cooling equipment. Due to this environment, the operation of the valve must be simple, and the valve must be durable. BAC's high quality mechanical water level control assembly is standard with all units, and has been specially designed to provide the most reliable operation while being easy to maintain. This accessory is omitted for remote sump applications.

Mechanical Water Level Control

Customer Valued

ELECTRIC WATER LEVEL CONTROL (OPTION)

BAC's Electric Water Level Control (EWLC) is a state-of-the-art conductivity actuated, probe type liquid level control. The hermetically sealed EWLC is engineered and manufactured specifically for use in evaporative cooling systems and is equipped with an error code LED which illuminates to indicate status, including when the water and/or probes are dirty. The EWLC option replaces the standard mechanical make-up valve, and includes a slow closing, solenoid activated valve in the make-up water line to minimize water hammer. EWLC is recommended when more precise water level control is required and in areas that experience sub-freezing conditions.

Electric Water Level Control

BASIN SWEEPER PIPING (OPTION)

Basin sweeper piping is an effective method of reducing sediment that may collect in the cold water basin of the unit. A complete piping system, including nozzles, is provided in the cold water basin to connect to side stream filtration equipment (provided by others). For more information on filtration systems, consult the "Filtration Guide" found on **page J233.**

Basin Sweeper Piping

LOW AND HIGH LEVEL ALARM FLOAT SWITCHES (OPTION)

Low and high level alarm float switches are available to provide added control to your equipment operation. Level alarms can alert operators to an abnormal operating condition to ensure the highest system efficiency with minimal water usage.

BASIN HEATERS (OPTION)

Evaporative cooling equipment exposed to below freezing ambient temperatures require protection to prevent freezing of the water in the cold water basin when the unit is idle. Factory-installed electric immersion heaters, which maintain 40°F (4.4°C) water temperature, are a simple and inexpensive way of providing such protection.

HEATER kW DATA

Model Number	0°F (-17.8°C) Ambient Heaters		-20°F (-28.9°C) Ambient Heaters	
	Number of Heaters	kW per Heater	Number of Heaters	kW per Heater
FXV-0806	1	4	1	6
FXV-0809	1	6	1	9
FXV-0812	1	8	1	12
FXV-0818	1	12	1	18
FXV-1212	1	12	1	16
FXV-1218	1	16	1	24

Basin Heater

NOTE: This table is based on 460V/ 3 phase/60 Hz power.

Water Distribution System

The FXV water distribution system is provided with BAC 360™ Spray Nozzles. These nozzles are large orifice and non-clogging. The design of the FXV uses parallel air and water flow to allow for easy inspection and access to the top of the coil during full operation.

STANDARD SPRAY WATER PUMP

The FXV water distribution system comes standard with an integral spray water pump sized to distribute the recirculating water over the coil maximizing capacity. The patented BAC 360™ Spray Nozzles are non-clog, ensure even flow over the coil area, and are simple to remove for maintenance. Parallel flow of air and spray water allow for inspection and access to the top of the coils during full operation.

Standard Spray Water Pump

REDUNDANT PUMPS (OPTION)

An optional secondary spray pump is available. A manual valve will be supplied at each pump discharge to allow for manual switch-over for continued equipment operation until maintenance can be performed.

FXV Custom Features & Options

Fill

BACross® Fill, BAC's patented crossflow hanging fill, was developed after years of extensive research. BACross® Fill is made of PVC and is optimized to provide the most efficient thermal capacity. PVC is virtually impervious to rot, decay, and biological attack. The fill is elevated above the cold water basin floor to facilitate cleaning and maintenance. The integral eliminators effectively strip entrained moisture from the leaving air stream with minimum pressure drop to prevent water loss with negligible impact on efficiency.

BACross® Fill Manufacturing

Customer Valued

STANDARD FILL

Standard fill can be used in applications with spray water temperatures up to 130°F (54.4°C). The fill and drift eliminators are formed from self-extinguishing PVC having a flame spread rating of 5 per ASTM E84.

HIGH TEMPERATURE FILL (OPTION)

An optional high temperature fill material is available which increases the maximum allowable spray water temperature to 140°F (60°C). The BAC selection program determines if a fill change is required by considering all of the design requirements. The spray water temperature should not be confused with the temperature of the process fluid contained in the coil, which can go up to 180°F (82.2°C).

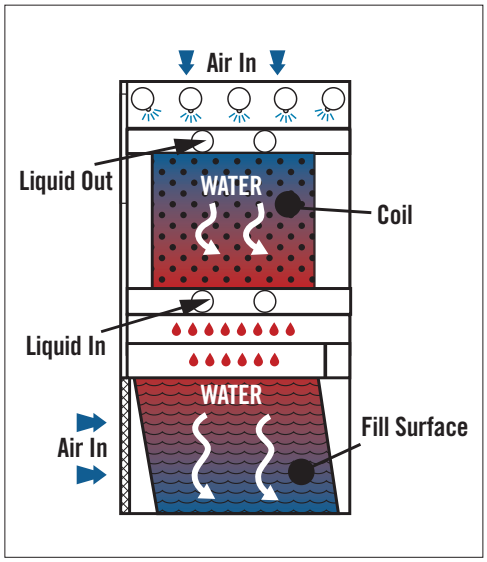

Coil Fill Technology

Shipping and Rigging

BAC units are factory-assembled to ensure uniform quality with minimum field assembly. Each unit has been designed with rigging and assembly in mind and includes features to minimize installation time.

KNOCKDOWN UNITS (OPTION)

Knockdown units are available for jobs where access to the cooling tower location is limited by elevators, doorways, or similar obstacles, where lifting methods impose very strict weight limits, or where the shipping cost of a fully assembled tower is excessive. All materials of construction and design features are the same as those of a factory assembled unit. Welded Type 304 stainless steel cold water basins and TriArmor® Corrosion Protection System cold water basins are excluded due to the need for in-plant assembly.

Sound Options

Recognition of the importance of sound reduction is growing and can be a very important design criterion for any project. BAC maintains the widest selection of sound mitigating options in the market place and can provide the most cost effective option to meet any requirement.

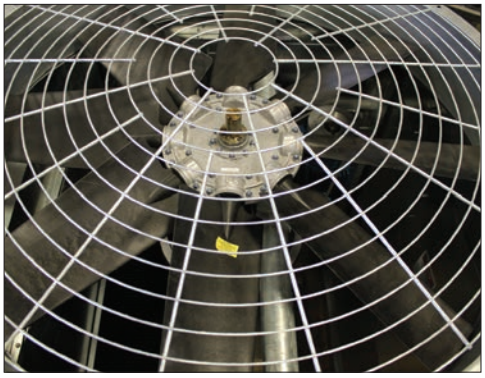

Low Sound Fan

STANDARD FAN

The fan provided for all FXV Closed Circuit Cooling Towers is selected to optimize low sound levels and maximize thermal performance.

LOW SOUND FAN (OPTION)

The Low Sound Fan option reduces sound up to 8 dBA. Adding a high solidity fan decreases fan speeds, which proportionally decreases sound levels. The thermal performance with the Low Sound Fan has been certified in accordance with CTI Standard STD-201.

WHISPER QUIET FAN (OPTION)

For the most extreme sound limitations, BAC's Whisper Quiet Fan reduces sound up to 14 dBA. The FXV thermal performance with the Whisper Quiet fan is certified in accordance with CTI Standard STD-201.

SOUND ATTENUATION (OPTION)

Factory designed, tested, and rated sound attenuation options are available for both the air intake and discharge. Consult your local BAC Representative regarding available options. The FXV thermal performance with intake sound attenuation is certified in accordance with CTI Standard STD-201.

Single Side Air Intake

SINGLE SIDE AIR INTAKE

Single-side air intake units can be placed close to solid walls, reducing the size of enclosures and allowing for more profitable use of premium space. Also, the panel opposite the air intake, called the blankoff panel, is inherently quiet. Positioning the blankoff panel towards the sound sensitive direction insulates sensitive areas from higher sound levels.

FXV Custom Features & Options

Air Intake Options

In a closed circuit cooling tower, airborne debris can be entrained in the water through the unit's air intake. The FXV has several options for air intake accessories that prevent debris from entering the system and maintain even unobstructed flow through the unit. Reducing the amount of debris that enters the tower lowers maintenance requirements and helps to maintain thermal efficiency.

Combined Inlet Shields

Customer Valued

COMBINED INLET SHIELDS (CIS)

The Combined Inlet Shields' (CIS) bent flow path blocks sunlight from the cold water basin and fill section and acts as a screen to prevent debris from entering the unit. These benefits result in a significant reduction in algae growth, debris accumulation, and scale build-up. CIS are constructed from corrosion and UV resistant PVC, are CTI certified, and are installed in easy to handle sections that are separate from the fill section to facilitate removal, inspection, and replacement. The use of CIS results in lower maintenance costs and ease of maintenance over the life of the unit.

PCD Hood Installation

PCD HOODS AND INSULATION (OPTION)

The innovative design of BAC closed circuit cooling tower's results in a low heat loss when the unit is idle. When additional heat loss prevention is desired,PCDs with stainless steel linkages and damper actuators can be provided. The motor actuators are easily accessible. The addition of factory mounted insulation to the hood and/or casing further reduces the heat loss by minimizing losses due to conduction. Per ASHRAE 90.1-2010 either an automatic 3 way valve or PCDs are required on Closed Circuit Cooling Towers used on heat pump applications when used in heating applications.

Customer Valued

SUNSCREENS (OPTION)

The corrosion resistant SunScreens are mounted above the spray distribution system and help to smooth the airflow into the coils for optimum thermal performance. They also prevent strong winds from carrying spray water out of the unit and block sunlight in locations previously susceptible to algae growth. SunScreens are constructed in easy to handle sections to facilitate removal, inspection, and replacement.

Access Options

BAC provides a broad offering of access options. Our evaporative equipment is designed to be the most easily maintained for sustaining capacity over a longer life. All BAC platforms and ladders are OSHA compliant to ensure personnel safety and code compliance.

NOTE: Platforms, ladders, handrails, safety gates, and safety cages can be added at the time of order or as an aftermarket item.

INTERNAL WALKWAY

An internal walkway is available, allowing access to the spacious plenum area for maintenance and inspection of the cold water basin, make-up, fill, and drive system.

MOTOR REMOVAL SYSTEM (OPTION)

The removal system includes davit arm(s) and access panels on the side opposite of the Air intake face, facilitating motor replacement.

EXTERNAL PLATFORM (OPTION)

Every external platform is preassembled and pre-fitted at the factory to ensure that every component will fit and function exactly as described. The platform will ship secured in the basin and attach quickly in the field with minimum fasteners. Platforms, ladders and safety cages can be added at the time of order or as an aftermarket item. Safety gates are available for all handrail openings. All components are designed to meet OSHA requirements.

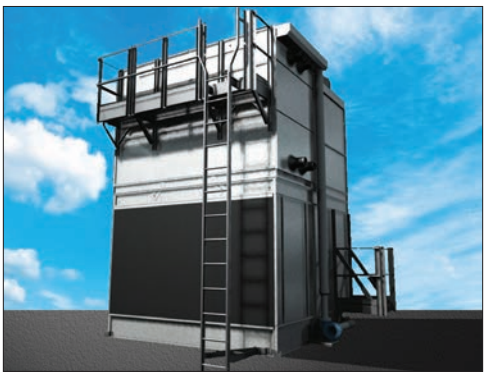

External Platform and Ladder with Access Door Platform

ACCESS DOOR PLATFORM AND LADDER PACKAGES (OPTION)

An access door platform is available to allow access to the unit when installed on elevated supports. This option allows for safe access to the unit, as well as a working platform to stage tools for maintenance.

Customer Valued

INTERNAL LADDER (OPTION)

For access to the motor and drive assemblies on single air intake models, a movable internal ladder is available.

INTERNAL SERVICE PLATFORM AND LADDER PACKAGES (OPTION FOR TWO PIECE UNITS)

For access to the motor and drive assemblies, an internal ladder and upper service platform with handrails is available on larger units. Safety gates are available for all handrail openings, and all components are designed to meet OSHA requirements. An internal walkway is required with this package.

Internal Service Platform and Internal Ladder

FXV Performance Data

Model Number	Nominal Tons[1]	Fan HP
FXV-0806A-12D-G	29	3
FXV-0806A-12D-H	33	5
FXV-0806A-12D-J	37	7.5
FXV-0806A-12D-K	39	10
FXV-0806A-16D-G	35	3
FXV-0806A-16D-H	40	5
FXV-0806A-16D-J	44	7.5
FXV-0806A-16D-K	47	10
FXV-0806A-20D-G	39	3
FXV-0806A-20D-H	45	5
FXV-0806A-20D-J	50	7.5
FXV-0806A-20D-K	53	10
FXV-0806A-24D-G	44	3
FXV-0806A-24D-H	51	5
FXV-0806A-24D-J	58	7.5
FXV-0806A-24D-K	63	10
FXV-0806B-12D-G	34	3
FXV-0806B-12D-H	38	5
FXV-0806B-12D-J	42	7.5
FXV-0806B-12D-K	44	10
FXV-0806B-12D-L	47	15
FXV-0806B-16D-G	41	3
FXV-0806B-16D-H	46	5
FXV-0806B-16D-J	51	7.5
FXV-0806B-16D-K	54	10
FXV-0806B-16D-L	57	15
FXV-0806B-20D-G	45	3
FXV-0806B-20D-H	52	5
FXV-0806B-20D-J	57	7.5
FXV-0806B-20D-K	61	10
FXV-0806B-20D-L	65	15
FXV-0806B-24D-G	53	3
FXV-0806B-24D-H	61	5
FXV-0806B-24D-J	67	7.5
FXV-0806B-24D-K	72	10
FXV-0806B-24D-L	78	15
FXV-0806B-28D-G	55	3
FXV-0806B-28D-H	64	5
FXV-0806B-28D-J	71	7.5
FXV-0806B-28D-K	77	10
FXV-0806B-28D-L	83	15

Model Number	Nominal Tons[1]	Fan HP
FXV-0806B-32D-G	58	3
FXV-0806B-32D-H	67	5
FXV-0806B-32D-J	75	7.5
FXV-0806B-32D-K	80	10
FXV-0806B-32D-L	87	15
FXV-0806B-36D-G	60	3
FXV-0806B-36D-H	69	5
FXV-0806B-36D-J	77	7.5
FXV-0806B-36D-K	83	10
FXV-0806B-36D-L	90	15
FXV-0809A-12D-G	47	3
FXV-0809A-12D-H	55	5
FXV-0809A-12D-J	61	7.5
FXV-0809A-12D-K	65	10
FXV-0809A-12D-L	72	15
FXV-0809A-16D-G	53	3
FXV-0809A-16D-H	62	5
FXV-0809A-16D-J	69	7.5
FXV-0809A-16D-K	75	10
FXV-0809A-16D-L	83	15
FXV-0809A-20D-G	57	3
FXV-0809A-20D-H	67	5
FXV-0809A-20D-J	75	7.5
FXV-0809A-20D-K	82	10
FXV-0809A-20D-L	91	15
FXV-0809A-24T-G	59	3
FXV-0809A-24T-H	69	5
FXV-0809A-24T-J	79	7.5
FXV-0809A-24T-K	86	10
FXV-0809A-24T-L	97	15
FXV-0809B-16D-G	61	3
FXV-0809B-16D-H	71	5
FXV-0809B-16D-J	79	7.5
FXV-0809B-16D-K	85	10
FXV-0809B-16D-L	94	15
FXV-0809B-16D-M	99	20
FXV-0809B-20D-G	66	3
FXV-0809B-20D-H	77	5
FXV-0809B-20D-J	86	7.5
FXV-0809B-20D-K	93	10
FXV-0809B-20D-L	103	15
FXV-0809B-20D-M	109	20

Model Number	Nominal Tons[1]	Fan HP
FXV-0809B-24D-G	128	3
FXV-0809B-24D-H	74	5
FXV-0809B-24D-J	87	7.5
FXV-0809B-24D-K	98	10
FXV-0809B-24D-L	107	15
FXV-0809B-24D-M	119	20
FXV-0809B-28D-G	76	3
FXV-0809B-28D-H	91	5
FXV-0809B-28D-J	103	7.5
FXV-0809B-28D-K	112	10
FXV-0809B-28D-L	125	15
FXV-0809B-28D-M	135	20
FXV-0809B-32D-G	78	3
FXV-0809B-32D-H	94	5
FXV-0809B-32D-J	106	7.5
FXV-0809B-32D-K	116	10
FXV-0809B-32D-L	130	15
FXV-0809B-32D-M	140	20
FXV-0809B-36D-G	80	3
FXV-0809B-36D-H	95	5
FXV-0809B-36D-J	109	7.5
FXV-0809B-36D-K	119	10
FXV-0809B-36D-L	134	15
FXV-0809B-36D-M	145	20
FXV-0809B-24T-G	69	3
FXV-0809B-24T-H	81	5
FXV-0809B-24T-J	91	7.5
FXV-0809B-24T-K	99	10
FXV-0809B-24T-L	111	15
FXV-0809B-24T-M	119	20
FXV-0809B-30T-G	74	3
FXV-0809B-30T-H	87	5
FXV-0809B-30T-J	99	7.5
FXV-0809B-30T-K	108	10
FXV-0809B-30T-L	120	15
FXV-0809B-30T-M	130	20
FXV-0809B-36T-G	77	3
FXV-0809B-36T-H	91	5
FXV-0809B-36T-J	104	7.5
FXV-0809B-36T-K	113	10
FXV-0809B-36T-L	127	15
FXV-0809B-36T-M	138	20

NOTE: For notes on **pages C29** and **C30**, see **page C33.**

Model Number	Nominal Tons[1]	Fan HP
FXV-0812A-12D-J	83	7.5
FXV-0812A-12D-K	90	10
FXV-0812A-12D-L	101	15
FXV-0812A-12D-M	108	20
FXV-0812A-16D-J	93	7.5
FXV-0812A-16D-K	100	10
FXV-0812A-16D-L	113	15
FXV-0812A-16D-M	122	20
FXV-0812A-20D-J	99	7.5
FXV-0812A-20D-K	109	10
FXV-0812A-20D-L	121	15
FXV-0812A-20D-M	131	20
FXV-0812A-23T-J	101	7.5
FXV-0812A-23T-K	109	10
FXV-0812A-23T-L	122	15
FXV-0812A-23T-M	132	20
FXV-0812A-16Q-J	79	7.5
FXV-0812A-16Q-K	86	10
FXV-0812A-16Q-L	95	15
FXV-0812A-16Q-M	103	20
FXV-0812A-23Q-J	96	7.5
FXV-0812A-23Q-K	104	10
FXV-0812A-23Q-L	116	15
FXV-0812A-23Q-M	125	20
FXV-0812B-12D-J	98	7.5
FXV-0812B-12D-K	105	10
FXV-0812B-12D-L	117	15
FXV-0812B-12D-M	124	20
FXV-0812B-12D-N	129	25
FXV-0812B-12D-O	132	30
FXV-0812B-16D-J	109	7.5
FXV-0812B-16D-K	118	10
FXV-0812B-16D-L	131	15
FXV-0812B-16D-M	140	20
FXV-0812B-16D-N	145	25
FXV-0812B-16D-O	149	30
FXV-0812B-20D-J	117	7.5
FXV-0812B-20D-K	127	10
FXV-0812B-20D-L	141	15
FXV-0812B-20D-M	152	20
FXV-0812B-20D-N	157	25
FXV-0812B-20D-O	163	30

Model Number	Nominal Tons[1]	Fan HP
FXV-0812B-24D-J	130	7.5
FXV-0812B-24D-K	142	10
FXV-0812B-24D-L	161	15
FXV-0812B-28D-J	136	7.5
FXV-0812B-28D-K	148	10
FXV-0812B-24T-J	124	7.5
FXV-0812B-24T-K	136	10
FXV-0812B-24T-L	152	15
FXV-0812B-24T-M	165	20
FXV-0812B-24T-N	171	25
FXV-0812B-24T-O	178	30
FXV-0812B-30T-J	132	7.5
FXV-0812B-30T-K	144	10
FXV-0812B-30T-L	163	15
FXV-0812B-30T-M	177	20
FXV-0812B-30T-N	183	25
FXV-0812B-30T-O	191	30
FXV-0812B-36T-J	137	7.5
FXV-0812B-36T-K	150	10
FXV-0812B-36T-L	171	15
FXV-0812B-36T-M	185	20
FXV-0812B-36T-N	193	25
FXV-0812B-36T-O	201	30
FXV-0812B-16Q-J	93	7.5
FXV-0812B-16Q-K	100	10
FXV-0812B-16Q-L	111	15
FXV-0812B-16Q-M	119	20
FXV-0812B-16Q-N	122	25
FXV-0812B-16Q-O	125	30
FXV-0812B-23Q-J	112	7.5
FXV-0812B-23Q-K	120	10
FXV-0812B-23Q-L	133	15
FXV-0812B-23Q-M	142	20
FXV-0812B-23Q-N	147	25
FXV-0812B-23Q-O	153	30
FXV-0812B-32Q-J	129	7.5
FXV-0812B-32Q-K	142	10
FXV-0812B-32Q-L	160	15
FXV-0812B-32Q-M	174	20
FXV-0812B-32Q-N	180	25
FXV-0812B-32Q-O	187	30

Model Number	Nominal Tons[1]	Fan HP
FXV-0818A-12D-K	147	15
FXV-0818A-12D-L	163	22.5
FXV-0818A-12D-M	173	30
FXV-0818A-16D-K	161	15
FXV-0818A-23T-K	183	15
FXV-0818A-23T-L	203	22.5
FXV-0818A-23T-M	217	30
FXV-0818A-24T-K	185	15
FXV-0818A-24T-L	209	22.5
FXV-0818A-24T-M	226	30
FXV-0818A-16Q-K	144	15
FXV-0818A-16Q-L	160	22.5
FXV-0818A-16Q-M	171	30
FXV-0818A-23Q-K	177	15
FXV-0818A-23Q-L	195	22.5
FXV-0818A-23Q-M	209	30
FXV-0818A-24Q-K	180	15
FXV-0818A-24Q-L	203	22.5
FXV-0818A-24Q-M	218	30
FXV-0818A-32Q-K	192	15
FXV-0818A-32Q-L	218	22.5
FXV-0818A-32Q-M	237	30
FXV-0818A-36H-K	190	15
FXV-0818A-36H-L	214	22.5
FXV-0818A-36H-M	233	30
FXV-0818B-12D-K	167	15
FXV-0818B-12D-L	181	22.5
FXV-0818B-12D-M	194	30
FXV-0818B-12D-N	199	37.5
FXV-0818B-12D-O	206	45
FXV-0818B-24T-K	215	15
FXV-0818B-24T-L	239	22.5
FXV-0818B-24T-M	257	30
FXV-0818B-24T-N	264	37.5
FXV-0818B-24T-O	275	45
FXV-0818B-30T-K	227	15
FXV-0818B-16Q-K	164	15
FXV-0818B-16Q-L	180	22.5
FXV-0818B-16Q-M	191	30
FXV-0818B-16Q-N	197	37.5
FXV-0818B-16Q-O	204	45

FXV Performance Data

Model Number	Nominal Tons[1]	Fan HP
FXV-0818B-24Q-K	207	15
FXV-0818B-24Q-L	230	22.5
FXV-0818B-24Q-M	246	30
FXV-0818B-24Q-N	255	37.5
FXV-0818B-24Q-O	265	45
FXV-0818B-32Q-K	224	15
FXV-0818B-32Q-L	250	22.5
FXV-0818B-32Q-M	267	30
FXV-0818B-32Q-N	276	37.5
FXV-0818B-32Q-O	289	45
FXV-0818B-36H-K	220	15
FXV-0818B-36H-L	245	22.5
FXV-0818B-36H-M	263	30
FXV-0818B-36H-N	272	37.5
FXV-0818B-36H-O	284	45
FXV-1212B-12D-K	123	10
FXV-1212B-12D-M	147	20
FXV-1212B-12D-N	156	25
FXV-1212B-12D-O	163	30
FXV-1212B-16D-K	137	10
FXV-1212B-16D-M	166	20
FXV-1212B-16D-N	176	25
FXV-1212B-16D-O	185	30
FXV-1212B-20D-K	148	10
FXV-1212B-20D-M	180	20
FXV-1212B-20D-N	190	25
FXV-1212B-20D-O	200	30
FXV-1212B-24D-K	163	10
FXV-1212B-24D-M	204	20
FXV-1212B-24D-N	219	25
FXV-1212B-24D-O	230	30
FXV-1212B-28D-K	170	10
FXV-1212B-28D-M	213	20
FXV-1212B-28D-N	228	25
FXV-1212B-28D-O	241	30
FXV-1212B-23T-K	152	10
FXV-1212B-23T-L	169	15
FXV-1212B-23T-M	182	20
FXV-1212B-23T-N	193	25
FXV-1212B-23T-O	201	30
FXV-1212B-24T-K	156	10
FXV-1212B-24T-M	194	20
FXV-1212B-24T-N	207	25
FXV-1212B-24T-O	217	30

Model Number	Nominal Tons[1]	Fan HP
FXV-1212B-23Q-K	145	10
FXV-1212B-23Q-M	173	20
FXV-1212B-23Q-N	183	25
FXV-1212B-23Q-O	191	30
FXV-1212C-12D-K	129	10
FXV-1212C-12D-L	145	15
FXV-1212C-12D-M	155	20
FXV-1212C-12D-N	164	25
FXV-1212C-12D-O	171	30
FXV-1212C-12D-P	184	40
FXV-1212C-16D-K	146	10
FXV-1212C-16D-L	162	15
FXV-1212C-16D-M	175	20
FXV-1212C-16D-N	185	25
FXV-1212C-16D-O	193	30
FXV-1212C-16D-P	208	40
FXV-1212C-20D-L	175	15
FXV-1212C-20D-M	189	20
FXV-1212C-20D-N	200	25
FXV-1212C-20D-O	210	30
FXV-1212C-20D-P	226	40
FXV-1212C-24D-K	176	10
FXV-1212C-24D-L	200	15
FXV-1212C-24D-M	217	20
FXV-1212C-24D-N	232	25
FXV-1212C-24D-O	244	30
FXV-1212C-24D-P	267	40
FXV-1212C-28D-K	183	10
FXV-1212C-28D-L	208	15
FXV-1212C-28D-M	227	20
FXV-1212C-28D-N	242	25
FXV-1212C-28D-O	255	30
FXV-1212C-32D-K	189	10
FXV-1212C-32D-L	215	15
FXV-1212C-32D-M	235	20
FXV-1212C-36D-K	193	10
FXV-1212C-36D-L	221	15
FXV-1212C-23T-K	161	10
FXV-1212C-23T-L	179	15
FXV-1212C-23T-M	192	20
FXV-1212C-23T-N	203	25
FXV-1212C-23T-O	212	30
FXV-1212C-23T-P	229	40

Model Number	Nominal Tons[1]	Fan HP
FXV-1212C-23Q-K	154	10
FXV-1212C-23Q-L	171	15
FXV-1212C-23Q-M	183	20
FXV-1212C-23Q-N	193	25
FXV-1212C-23Q-O	201	30
FXV-1212C-23Q-P	217	40
FXV-1212C-24T-K	168	10
FXV-1212C-24T-L	190	15
FXV-1212C-24T-M	206	20
FXV-1212C-24T-N	220	25
FXV-1212C-24T-O	231	30
FXV-1212C-24T-P	252	40
FXV-1212C-30T-K	178	10
FXV-1212C-30T-L	202	15
FXV-1212C-30T-M	221	20
FXV-1212C-30T-N	235	25
FXV-1212C-30T-O	248	30
FXV-1212C-30T-P	271	40
FXV-1212C-36T-K	186	10
FXV-1212C-36T-L	212	15
FXV-1212C-36T-M	232	20
FXV-1212C-36T-N	247	25
FXV-1212C-36T-O	260	30
FXV-1212C-36T-P	285	40
FXV-1212C-16Q-K	123	10
FXV-1212C-16Q-L	137	15
FXV-1212C-16Q-M	148	20
FXV-1212C-16Q-N	155	25
FXV-1212C-16Q-O	163	30
FXV-1212C-16Q-P	176	40
FXV-1212C-24Q-K	160	10
FXV-1212C-24Q-L	181	15
FXV-1212C-24Q-M	196	20
FXV-1212C-24Q-N	209	25
FXV-1212C-24Q-O	219	30
FXV-1212C-24Q-P	239	40
FXV-1212C-32Q-K	175	10
FXV-1212C-32Q-L	198	15
FXV-1212C-32Q-M	216	20
FXV-1212C-32Q-N	230	25
FXV-1212C-32Q-O	242	30
FXV-1212C-32Q-P	266	40
FXV-1212C-36H-K	169	10
FXV-1212C-36H-L	192	15
FXV-1212C-36H-M	209	20
FXV-1212C-36H-N	223	25
FXV-1212C-36H-O	235	30
FXV-1212C-36H-P	257	40

NOTE: For notes on **pages C31** and **C32**, see **page C33.**

Model Number	Nominal Tons[1]	Fan HP
FXV-1218B-12D-K	198	15
FXV-1218B-12D-L	223	22.5
FXV-1218B-12D-M	241	30
FXV-1218B-12D-N	254	37.5
FXV-1218B-12D-O	267	45
FXV-1218B-16D-K	218	15
FXV-1218B-16D-L	247	22.5
FXV-1218B-16D-M	265	30
FXV-1218B-16D-N	282	37.5
FXV-1218B-20D-K	231	15
FXV-1218B-23T-K	251	15
FXV-1218B-23T-L	280	22.5
FXV-1218B-23T-M	302	30
FXV-1218B-23T-N	324	37.5
FXV-1218B-23T-O	334	45
FXV-1218B-24T-K	248	15
FXV-1218B-24T-L	283	22.5
FXV-1218B-24T-M	311	30
FXV-1218B-24T-N	331	37.5
FXV-1218B-24T-O	347	45
FXV-1218B-16Q-K	196	15
FXV-1218B-16Q-L	219	22.5
FXV-1218B-16Q-M	236	30
FXV-1218B-16Q-N	251	37.5
FXV-1218B-16Q-O	262	45
FXV-1218B-23Q-K	240	15
FXV-1218B-23Q-L	268	22.5
FXV-1218B-23Q-M	288	30
FXV-1218B-23Q-N	309	37.5
FXV-1218B-23Q-O	318	45
FXV-1218B-24Q-K	241	15
FXV-1218B-24Q-L	275	22.5
FXV-1218B-24Q-M	301	30
FXV-1218B-24Q-N	320	37.5
FXV-1218B-24Q-O	335	45
FXV-1218B-36H-K	254	15
FXV-1218B-36H-L	292	22.5
FXV-1218B-36H-M	319	30
FXV-1218B-36H-N	341	37.5
FXV-1218B-36H-O	360	45
FXV-1218C-12D-K	212	15
FXV-1218C-12D-L	235	22.5
FXV-1218C-12D-M	252	30
FXV-1218C-12D-N	266	37.5
FXV-1218C-12D-O	278	45
FXV-1218C-12D-P	301	60
FXV-1218C-16D-K	231	15
FXV-1218C-16D-L	258	22.5
FXV-1218C-16D-M	279	30

Model Number	Nominal Tons[1]	Fan HP
FXV-1218C-20D-K	245	15
FXV-1218C-24T-K	266	15
FXV-1218C-24T-L	316	22.5
FXV-1218C-24T-M	329	30
FXV-1218C-24T-N	351	37.5
FXV-1218C-24T-O	369	45
FXV-1218C-24T-P	403	60
FXV-1218C-30T-K	280	15
FXV-1218C-30T-L	302	22.5
FXV-1218C-30T-M	348	30
FXV-1218C-30T-N	373	37.5
FXV-1218C-30T-O	391	45
FXV-1218C-36T-K	290	15
FXV-1218C-36T-L	333	22.5
FXV-1218C-23Q-K	255	15
FXV-1218C-23Q-L	283	22.5
FXV-1218C-23Q-M	304	30
FXV-1218C-23Q-N	325	37.5
FXV-1218C-23Q-O	334	45
FXV-1218C-23Q-P	362	60
FXV-1218C-16Q-K	207	15
FXV-1218C-16Q-L	231	22.5
FXV-1218C-16Q-M	249	30
FXV-1218C-16Q-N	262	37.5
FXV-1218C-16Q-O	275	45
FXV-1218C-16Q-P	296	60
FXV-1218C-23Q-K	255	15
FXV-1218C-23Q-L	283	22.5
FXV-1218C-23Q-M	304	30
FXV-1218C-23Q-N	325	37.5
FXV-1218C-23Q-O	334	45
FXV-1218C-23Q-P	362	60
FXV-1218C-24Q-K	258	15
FXV-1218C-24Q-L	293	22.5
FXV-1218C-24Q-M	318	30
FXV-1218C-24Q-N	338	37.5
FXV-1218C-24Q-O	359	45
FXV-1218C-24Q-P	388	60
FXV-1218C-32Q-K	277	15
FXV-1218C-32Q-L	316	22.5
FXV-1218C-32Q-M	344	30
FXV-1218C-32Q-N	367	37.5
FXV-1218C-32Q-O	387	45
FXV-1218C-32Q-P	424	60
FXV-1218C-36H-K	273	15
FXV-1218C-32Q-P	424	60
FXV-1218C-32Q-P	424	60
FXV-1218C-32Q-P	424	60
FXV-1218C-32Q-P	424	60
FXV-1218C-32Q-P	424	60

FXV Engineering Data

NOTE: Up-to-date engineering data, free product selection software, and more can be found at **www.BaltimoreAircoil.com.**

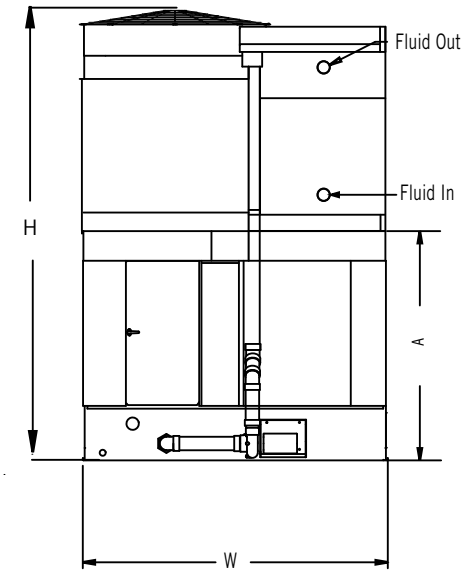

Connection Side:
Models FXV-0806X and FXV-0809X

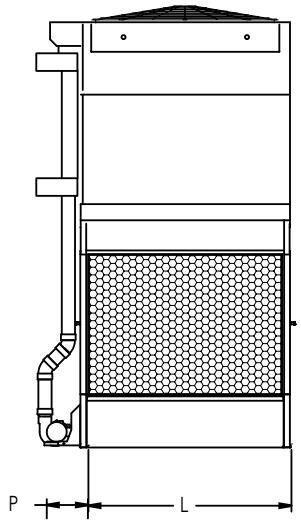

Air Intake End:
Models FXV-0806X

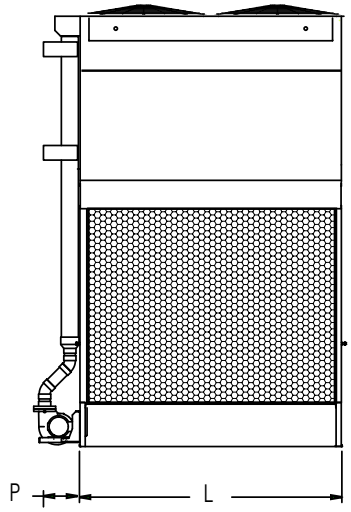

Air Intake End:
Models FXV-0809X

NOTES:

1. Nominal tons of cooling represents 3 USGPM of water cooled from 95°F to 85°F at a 78°F entering wet-bulb temperature.
2. Operating weight is for the unit with the water level in the cold water basin at the overflow.
3. The actual size of the coil inlet and outlet connection may vary with the design flow rate. Consult unit print for dimensions.
4. Coil inlet and outlet connections are beveled for welding.
5. Models with Whisper Quiet Fans may have heights up to 5 1/2" greater than shown.
6. Standard make-up, drain and overflow connections are located near the bottom of the unit. Make-up connection is 1 1/2" MPT standpipe, drain is 2" FPT, and overflow is 3" FPT. Standard make-up, drain, and overflow connections are MPT.

Do not use for construction. Refer to factory certified dimensions. This catalog includes data current at the time of publication, which should be reconfirmed at the time of purchase.

Model Number	Pump Motor HP	CFM	Approximate Weight (lbs)			Dimensions					Connection Size[3,6]		Spray Pump (USGPM)	Internal Coil Volume (gal)	Riser Pipe Dia.
			Operating Weight[2]	Shipping Weight	Heaviest Section	L	W	H	A	P	Make-Up Water	Coil			
FXV-0806A-12D-x	2	33,060	7,780	4,890	2,920	6'-0"	8'-6"	12'-7"	6'-5"	1'-6"	1 1/2"	4	290	44	4"
FXV-0806A-16D-x		32,400	8,210	5,190	3,210			12'-7"	6'-5"					59	
FXV-0806A-20D-x		31,830	8,630	5,500	3,500			12'-7"	6'-5"					73	
FXV-0806A-24D-x		31,480	9,460	6,200	4,180			15'-5"	6'-5"					88	
FXV-0806B-12D-x		41,970	8,320	5,420	3,000			15'-3"	9'-1"					44	
FXV-0806B-16D-x		41,450	8,740	5,730	3,290			15'-3"	9'-1"					59	
FXV-0806B-20D-x		40,990	9,160	6,030	3,580			15'-3"	9'-1"					73	
FXV-0806B-24D-x		40,590	9,990	6,740	4,250			18'-1"	9'-1"					88	
FXV-0806B-28D-x		40,330	10,420	7,040	4,540			18'-1"	9'-1"					103	
FXV-0806B-32D-x		40,390	10,840	7,340	4,830			18'-1"	9'-1"					117	
FXV-0806B-36D-x		39,860	11,270	7,650	5,120			18'-1"	9'-1"					132	
FXV-0809A-12D-x	5	48,800	11,040	6,610	3,890	9'-0"	8'-6"	12'-5"	6'-5"	2'-0"	1 1/2"	4	500	66	6"
FXV-0809A-16D-x		47,700	11,670	7,060	4,320			12'-5"	6'-5"			4		88	
FXV-0809A-20D-x		46,860	12,300	7,510	4,740			12'-5"	6'-5"			4		110	
FXV-0809A-24T-x		46,380	13,440	8,470	5,660			15'-3"	6'-5"			6		132	
FXV-0809B-16D-x		58,000	12,260	7,650	4,340			15'-1"	9'-1"			4		88	
FXV-0809B-20D-x		57,350	12,890	8,100	4,770			15'-1"	9'-1"			4		110	
FXV-0809B-24D-x		57,160	13,960	8,990	5,610			17'-11"	9'-1"			4		132	
FXV-0809B-28D-x		56,670	14,590	9,440	6,040			17'-11"	9'-1"			4		154	
FXV-0809B-32D-x		56,320	15,220	9,880	6,460			17'-11"	9'-1"			4		176	
FXV-0809B-36D-x		56,320	15,850	10,330	6,890			17'-11"	9'-1"			4		197	
FXV-0809B-24T-x		57,030	14,040	9,060	5,680			17'-11"	9'-1"			6		132	
FXV-0809B-30T-x		56,480	14,980	9,730	6,320			17'-11"	9'-1"			6		165	
FXV-0809B-36T-x		55,960	15,920	10,400	6,960			17'-11"	9'-1"			6		197	

FXV Engineering Data

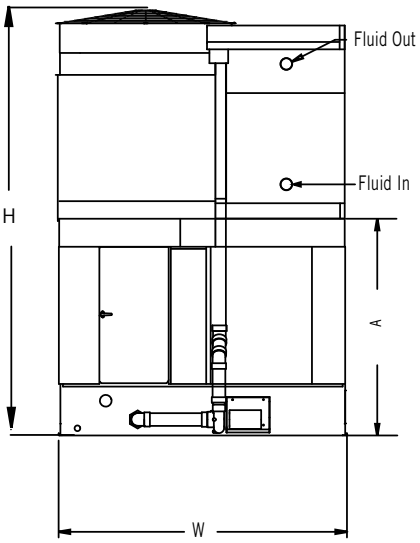

Connection Side:
Models FXV-0812X and FXV-0818X

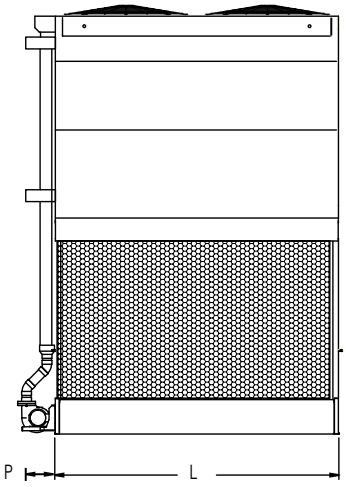

Air Intake End:
Models FXV-0812X

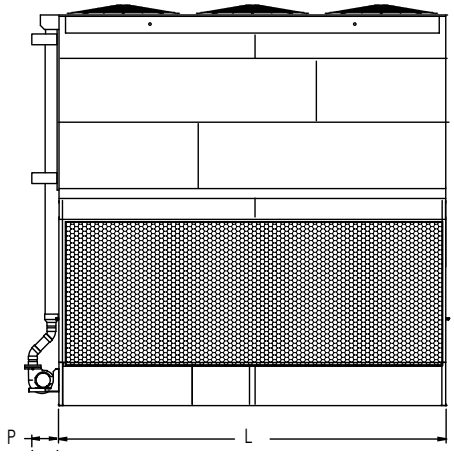

Air Intake End: Models FXV-0818X

NOTES:

1. Nominal tons of cooling represents 3 USGPM of water cooled from 95°F to 85°F at a 78°F entering wet-bulb temperature.
2. Operating weight is for the unit with the water level in the cold water basin at the overflow and a full coil.
3. The actual size of the coil inlet and outlet connection may vary with the design flow rate. Consult unit print for dimensions.
4. Coil inlet and outlet connections are beveled for welding.
5. Models with Whisper Quiet Fans may have heights up to 5 1/2" greater than shown.
6. Standard make-up, drain and overflow connections are located near the bottom of the unit. Make-up connection is 1 1/2" MPT standpipe, drain is 2" FPT, and overflow is 3" FPT. Standard make-up, drain, and overflow connections are MPT.

Do not use for construction. Refer to factory certified dimensions. This catalog includes data current at the time of publication, which should be reconfirmed at the time of purchase.

Model Number	Pump Motor HP	CFM	Approximate Weight (lbs)			Dimensions					Connection Size[3,6]		Spray Pump (USGPM)	Internal Coil Volume (gal)	Riser Pipe Dia.
			Operating Weight[2]	Shipping Weight	Heaviest Section	L	W	H	A	P	Make-Up Water	Coil			
FXV-0812A-12D-x	5	66,780	13,990	8,030	4,680	12'-0"	8'-6"	12'-7"	6'-5"	2'-0"	1 1/2"	4	719	88	6"
FXV-0812A-16D-x		65,470	14,820	8,620	5,250			12'-7"	6'-5"			4		117	
FXV-0812A-20D-x		64,570	15,660	9,210	5,810			12'-7"	6'-5"			4		146	
FXV-0812A-23T-x		63,650	16,560	10,070	7,100			12'-7"	6'5"			4		176	
FXV-0812A-16Q-x		65,530	14,980	8,780	5,400			12'-7"	6'-5"			6		117	
FXV-0812A-23Q-x		63,550	16,510	10,030	7,060			12'7"	6'5"			4		176	
FXV-0812B-12D-x		84,850	14,730	8,770	4,760			15'-3"	9'-1"			4		88	
FXV-0812B-16D-x		83,810	15,560	9,360	5,320			15'-3"	9'-1"			4		117	
FXV-0812B-20D-x		82,730	16,400	9,950	5,890			15'-3"	9'-1"			4		146	
FXV-0812B-24D-x		65,270	17,610	10,910	6,810			18'-1"	9'-1"			4		176	
FXV-0812B-28D-x		57,020	18,360	11,420	7,290			18'-1"	9'-1"			4		205	
FXV-0812B-24T-x		81,970	17,810	11,120	7,000			18'-1"	9'-1"			6		176	
FXV-0812B-30T-x		81,060	19,060	12,000	7,840			18'-1"	9'-1"			6		219	
FXV-0812B-36T-x		80,520	20,310	12,890	8,690			18'-1"	9'-1"			6		263	
FXV-0812B-16Q-x		83,470	15,720	9,520	5,480			15'-3"	9'-1"			6		117	
FXV-0812B-23Q-x		81,950	17,240	10,750	7,170			15'-3"	9'-1"			4		176	
FXV-0812B-24Q-x		81,960	17,860	11,170	7,050			18'-1"	9'-1"			6		176	
FXV-0812B-32Q-x		80,790	19,530	12,350	8,170			18'-1"	9'-1"			6		234	
FXV-0818A-12D-x	7.5	101,860	20,650	11,610	6,810	18'-0"	8'-6"	13'-1"	6'-11"	2'-0"	1 1/2"	4	859	132	6"
FXV-0818A-16D-x		80,850	21,810	12,410	7,570			13'-1"	6'-11"			4		176	
FXV-0818A-23T-x		97,180	24,520	14,700	10,110			13'-1"	6'-11"			4		263	
FXV-0818A-24T-x		97,190	25,280	15,150	10,180			15'-11"	6'-11"			6		263	
FXV-0818A-16Q-x		99,900	22,130	12,730	7,870			13'-1"	6'-11"			6		176	
FXV-0818A-23Q-x		97,180	24,470	14,650	10,060			13'-1"	6'-11"			4		263	
FXV-0818A-24Q-x		97,180	25,340	15,210	10,230			15'-11"	6'-11"			6		263	
FXV-0818A-32Q-x		95,160	27,960	17,100	12,030			15'-11"	6'-11"			6		351	
FXV-0818A-36H-x		94,400	29,390	18,170	13,050			15'-11"	6'-11"			8		394	
FXV-0818B-12D-x		129,370	21,750	12,710	6,960			15'-9"	9'-7"			4		132	
FXV-0818B-24T-x		125,300	26,380	16,250	10,330			18'-7"	9'-7"			6		263	
FXV-0818B-30T-x		86,880	28,040	17,360	11,380			18'-7"	9'-7"			6		329	
FXV-0818B-16Q-x		127,370	23,230	13,830	8,020			15'-9"	9'-7"			6		176	
FXV-0818B-24Q-x		125,220	26,440	16,310	10,390			18'-7"	9'-7"			6		263	
FXV-0818B-32Q-x		123,520	29,060	18,200	12,190			18'-7"	9'-7"			6		351	
FXV-0818B-36H-x		122,770	30,490	19,270	13,200			18'-7"	9'-7"			8		394	

FXV Engineering Data

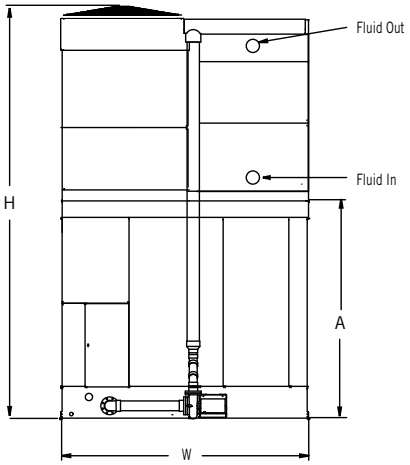

Connection Side:
Models FXV-1212X and FXV-1218X

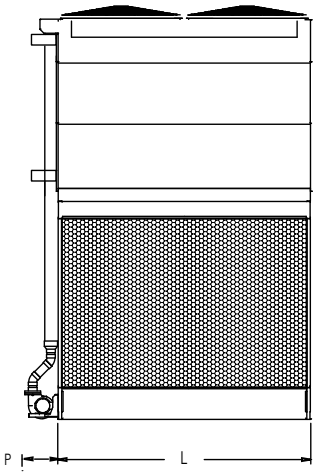

Air Intake End:
Models FXV-1212X

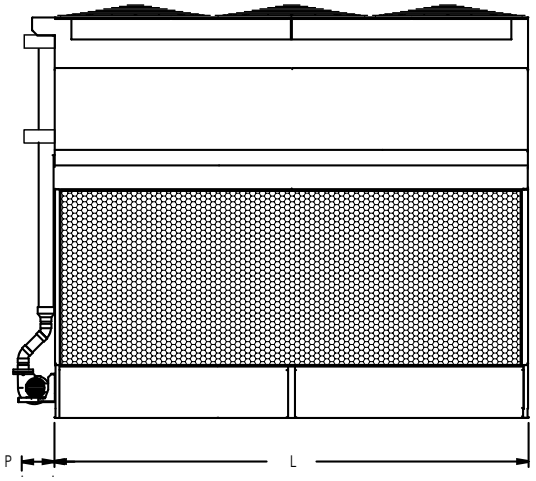

Air Intake End:
Models FXV-1218X

NOTES:

1. Nominal tons of cooling represents 3 USGPM of water cooled from 95°F to 85°F at a 78°F entering wet-bulb temperature.
2. Operating weight is for the unit with the water level in the cold water basin at the overflow and a full coil.
3. The actual size of the coil inlet and outlet connection may vary with the design flow rate. Consult unit print for dimensions.
4. Coil inlet and outlet connections are beveled for welding.
5. Models with Whisper Quiet Fans may have heights up to 5 1/2" greater than shown.
6. Standard make-up, drain and overflow connections are located near the bottom of the unit. Make-up connection is 1 1/2" MPT standpipe, drain is 2" FPT, and overflow is 3" FPT. Standard make-up, drain, and overflow connections are MPT.

Do not use for construction. Refer to factory certified dimensions. This catalog includes data current at the time of publication, which should be reconfirmed at the time of purchase.

Model Number	Pump Motor HP	CFM	Approximate Weight (lbs)			Dimensions					Connection Size[3,6]		Spray Pump (USGPM)	Internal Coil Volume (gal)	Riser Pipe Dia.
			Operating Weight[2]	Shipping Weight	Heaviest Section	L	W	H	A	P	Make-Up Water	Coil			
FXV-1212B-12D-x	7.5	99,040	19,550	10,780	6,280	12'-0"	11'-10"	15'-3"	9'-1"	2'-0"	1 1/2"	4	859	145	6"
FXV-1212B-16D-x		97,830	20,930	11,760	7,210			15'-3"	9'-1"			4		193	
FXV-1212B-20D-x		96,800	22,300	12,730	8,140			15'-3"	9'-1"			4		241	
FXV-1212B-24D-x		95,710	24,220	14,250	9,580			18'-2"	9'-1"			4		289	
FXV-1212B-28D-x		94,960	25,600	15,220	10,510			18'-2"	9'-1"			4		337	
FXV-1212B-23T-x		95,710	23,820	14,210	9,850			15'-3"	9'-1"			4		289	
FXV-1212B-24T-x		95,720	24,300	14,330	9,660			18'-2"	9'-1"			6		289	
FXV-1212B-23Q-x		95,770	23,770	14,160	9,800			15'-3"	9'-1"			4		289	
FXV-1212C-12D-x		114,030	20,090	11,320	6,570			16'-7"	10'-5"			4		145	
FXV-1212C-16D-x		112,810	21,460	12,290	7,500			16'-7"	10'-5"			4		193	
FXV-1212C-20D-x		111,660	22,840	13,270	8,430			16'-7"	10'-5"			4		241	
FXV-1212C-24D-x		110,690	24,750	14,780	9,870			19'-6"	10'-5"			4		289	
FXV-1212C-28D-x		99,900	25,830	15,460	10,510			19'-6"	10'-5"			4		337	
FXV-1212C-32D-x		86,670	27,120	16,350	11,360			19'-6"	10'-5"			4		385	
FXV-1212C-36D-x		78,750	28,470	17,300	12,270			19'-6"	10'-5"			4		433	
FXV-1212C-23T-x		110,620	24,340	14,730	10,010			16'-7"	10'-5"			4		289	
FXV-1212C-24T-x		110,630	24,830	14,860	9,940			19'-6"	10'-5"			6		289	
FXV-1212C-30T-x		109,460	26,890	16,320	11,330			19'-6"	10'-5"			6		361	
FXV-1212C-36T-x		108,390	28,950	17,770	12,720			19'-6"	10'-5"			6		433	
FXV-1212C-16Q-x		112,530	21,630	12,460	7,660			16'-7"	10'-5"			6		193	
FXV-1212C-23Q-x		110,670	24,290	14,680	9,960			16'-7"	10'-5"			4		289	
FXV-1212C-24Q-x		110,670	24,920	14,950	10,030			19'-6"	10'-5"			6		289	
FXV-1212C-32Q-x		109,040	27,660	16,890	11,880			19'-6"	10'-5"			6		385	
FXV-1212C-36H-x		108,430	29,230	18,060	12,990			19'-6"	10'-5"			8		433	
FXV-1218B-12D-x	10	149,660	29,430	16,690	10,070	18'-0"	11'-10"	15' 9"	10'-11"	2'-6"	1 1/2"	6	1,300	217	8"
FXV-1218B-16D-x		138,870	31,300	17,950	11,330			15' 9"	10'-11"			6		289	
FXV-1218B-20D-x		101,070	32,870	18,920	12,300			15' 9"	10'-11"			6		361	
FXV-1218B-23T-x		144,550	35,640	21,090	14,470			15' 9"	10'-11"			6		433	
FXV-1218B-24T-x		144,550	36,720	22,170	15,550			18' 8"	10'-11"			6		433	
FXV-1218B-16Q-x		147,460	31,660	18,320	11,700			15' 9"	10'-11"			6		289	
FXV-1218B-23Q-x		144,290	35,580	21,040	14,420			15' 9"	10'-11"			6		433	
FXV-1218B-24Q-x		144,290	36,660	22,120	15,500			18' 8"	10'-11"			6		433	
FXV-1218B-36H-x		141,100	42,960	26,610	19,990			18' 8"	10'-11"			6		649	
FXV-1218C-16D-x		135,070	31,610	17,720	10,680			17'-1"	10'-11"			4		289	
FXV-1218C-20D-x		107,210	33,620	19,130	12,020			17'-1"	10'-11"			4		361	
FXV-1218C-24T-x		167,170	37,150	22,070	14,820			20'-0"	10'-11"			6		433	
FXV-1218C-30T-x		150,140	40,070	24,080	16,740			20'-0"	10'-11"			6		541	
FXV-1218C-36T-x		119,170	43,110	26,220	18,770			20'-0"	10'-11"			6		649	
FXV-1218C-16Q-x		170,030	32,280	18,390	11,320			17'-1"	10'-11"			6		289	
FXV-1218C-23Q-x		166,710	36,290	21,750	14,640			15'-9"	10'-11"			6		433	
FXV-1218C-24Q-x		166,720	37,250	22,160	14,910			20'-0"	10'-11"			6		433	
FXV-1218C-32Q-x		164,700	41,570	25,280	17,870			20'-0"	10'-11"			6		577	
FXV-1218C-36H-x		163,340	43,940	27,050	19,560			20'-0"	10'-11"			8		649	

FXV Engineering Data

FXV HEAT LOSS DATA (BTUH)

Model Number	Standard Unit[1]	Unit with PCD Hood[2]	Unit with PCD Hood and Insulation
FXV-0806X-12D	82,000	46,200	34,700
FXV-0806X-16D	97,100	45,900	34,500
FXV-0806X-20D	111,400	45,600	34,200
FXV-0806X-24D	140,200	61,300	44,600
FXV-0806X-28D	153,000	60,900	44,400
FXV-0806X-32D	165,100	60,600	44,100
FXV-0806X-36D	176,700	60,200	43,900
FXV-0809X-12D	118,700	60,400	47,400
FXV-0809X-16D	141,500	59,800	46,900
FXV-0809X-20D	163,000	59,200	46,400
FXV-0809X-24T	205,300	80,700	61,200
FXV-0809X-20D	163,000	59,200	46,400
FXV-0809X-24D	203,100	79,300	60,200
FXV-0809X-28D	222,000	78,600	59,600
FXV-0809X-32D	239,900	77,900	59,100
FXV-0809X-36D	256,800	77,300	58,600
FXV-0809X-24T	205,300	80,700	61,200
FXV-0809X-30T	233,900	79,800	60,500
FXV-0809X-36T	260,400	79,100	60,000
FXV-0812X-12D	154,900	74,300	59,800
FXV-0812X-16D	185,000	73,200	58,900
FXV-0812X-20D	213,400	72,200	58,100
FXV-0812X-24D	264,100	96,500	75,000
FXV-0812X-28D	288,800	95,300	74,100
FXV-0812X-23T	245,300	72,800	58,600
FXV-0812X-24T	267,900	98,700	76,700
FXV-0812X-30T	305,600	97,400	75,600
FXV-0812X-36T	340,300	96,100	74,600
FXV-0812X-16Q	188,700	75,500	60,800
FXV-0812X-23Q	246,700	74,500	60,000
FXV-0812X-24Q	271,700	101,000	78,400
FXV-0812X-32Q	323,100	99,700	77,500

Model Number	Standard Unit[1]	Unit with PCD Hood[2]	Unit with PCD Hood and Insulation
FXV-0818X-12D	225,500	100,900	83,600
FXV-0818X-16D	269,600	98,700	81,800
FXV-0818X-24T	389,200	132,900	106,000
FXV-0818X-30T	443,600	130,200	103,800
FXV-0818X-16Q	277,700	103,500	85,700
FXV-0818X-23Q	363,600	101,400	84,000
FXV-0818X-24Q	397,500	137,500	109,700
FXV-0818X-32Q	472,700	135,000	107,700
FXV-0818X-36H	514,300	137,100	109,300
FXV-1212X-12D	228,300	83,100	70,700
FXV-1212X-16D	277,800	81,700	69,500
FXV-1212X-20D	324,000	80,500	68,500
FXV-1212X-24D	394,300	107,500	86,500
FXV-1212X-28D	434,600	106,000	85,300
FXV-1212X-32D	472,400	104,600	84,200
FXV-1212X-36D	507,900	103,300	83,100
FXV-1212X-23T	378,600	82,200	70,000
FXV-1212X-24T	403,100	111,600	89,800
FXV-1212X-30T	465,700	110,100	88,600
FXV-1212X-36T	523,100	108,800	87,600
FXV-1212X-16Q	283,600	84,600	72,000
FXV-1212X-23Q	378,300	83,400	70,900
FXV-1212X-24Q	406,200	113,000	91,000
FXV-1212X-32Q	489,900	111,500	89,700
FXV-1212X-36H	536,300	113,700	91,500

Model Number	Standard Unit[1]	Unit with PCD Hood[2]	Unit with PCD Hood and Insulation
FXV-1218X-12D	331,900	109,000	97,000
FXV-1218X-16D	404,200	106,400	94,600
FXV-1218X-20D	471,100	103,900	92,500
FXV-1218X-23T	554,100	107,400	95,600
FXV-1218X-24T	586,700	145,800	122,300
FXV-1218X-30T	677,600	143,000	119,900
FXV-1218X-36T	760,500	140,400	117,700
FXV-1218X-16Q	416,900	112,200	99,800
FXV-1218X-23Q	557,100	109,600	97,600
FXV-1218X-24Q	593,400	148,700	124,700
FXV-1218X-32Q	716,100	145,700	122,200
FXV-1218X-36H	789,300	150,100	125,900

NOTES:

1. Heat Loss based on 50°F (10°C) entering coil water and -10°F (-23.3°C) ambient with 45 MPH wind (fans and pumps off).
2. One inch thick PVC nitrate rubber blend thermal insulation on both the PCD hood and the casing panels surrounding the coil.

DIMENSIONAL DATA OF POSITIVE CLOSURE DAMPER HOOD

Model Number	Hood Shipping Weight (lbs)[1]	Hood Operating Weight (lbs)	Length (L)	Width (W)	Height (Y)
FXV-0806	390	320	5'-11 7/8"	3'-5 1/4"	2'-7 1/8"
FXV-0809	540	430	8'-11 7/8"	3'-5 1/4"	
FXV-0812	720	570	11'-11 7/8"	3'-5 1/4"	
FXV-0818	1,475	1,250	17'-11 7/8"	3'-5 1/4"	
FXV-1212	1,160	920	11'-11 7/8"	5'-3 1/2"	
FXV-1218	1,650	1,300	17'-11 7/8"	5'-3 1/2"	

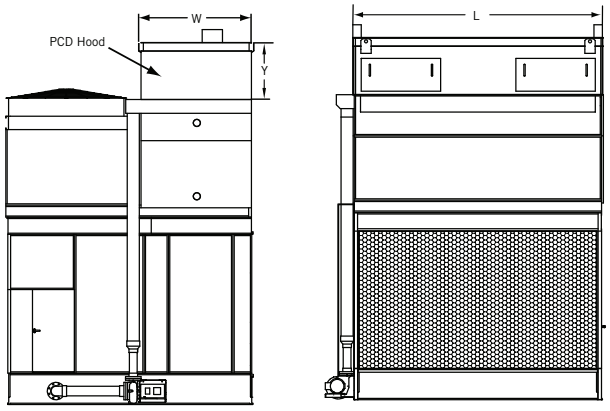

NOTE:

1. Hood shipping weight includes shipping skid weight.

Structural Support

The recommended support arrangement for FXV Closed Circuit Cooling Towers consists of parallel I-beams positioned as shown on the drawings. Besides providing adequate support, the steel also serves to raise the unit above any solid foundation to assure access to the bottom of the tower. To support an FXV on columns or in an alternate arrangement not shown here, consult your local BAC Representative. IBC wind and seismic load ratings are not available on alternate steel support arrangements.

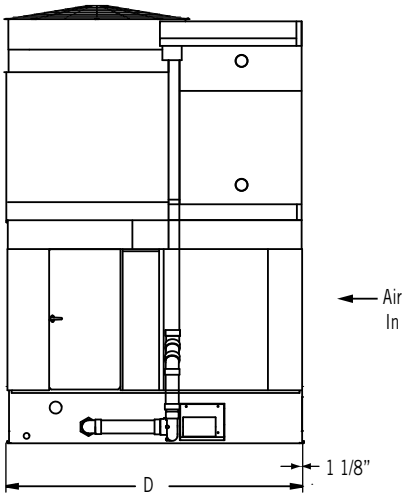

SINGLE AIR INTAKE

Model Number	D	Maximum Deflection[3]
FXV-0806	8'-3 1/2"	1/2"
FXV-0809	8'-3 1/2"	1/2"
FXV-0812	8'-3 1/2"	1/2"
FXV-0818	8'-3 1/2"	1/2"
FXV-1212	11'-7 3/4"	1/2"
FXV-1218	11'-7 3/4"	1/2"

NOTES:

1. Support steel and anchor bolts to be designed and furnished by others.
2. All support steel must be level at the top.
3. Beams must be selected in accordance with accepted structural practice. Maximum deflection of beam under unit to be 1/360 of span, not to exceed 1/2 inch.
4. If vibration isolation rails are to be used between the unit and supporting steel, be certain to allow for the length of the vibration rails when determining the length of the supporting steel, as vibration rail length and mounting hole locations may differ from those of the unit.
5. If point vibration isolation is used with multi-cell units, the isolators must be located under the support steel, not between the support steel and the closed circuit cooling towers.

PRODUCT SPOTLIGHT:

Advanced Coil Technology

Reduces Scale Tendencies, resulting in sustained thermal performance and maximum coil life.

Baltimore Aircoil Company's innovative FXV Closed Circuit Cooling Towers use patented Advanced Coil Technology which reduces the tendency to accumulate scale on the coil surface. Scale is the build-up of solids, often calcium and magnesium compounds, resulting from the evaporation of water from with in the unit. By reducing scale tendency, the FXV is able to sustain peak heat transfer capability over the life of the unit and maximize coil longevity. The FXV saves customers time, money, and energy in the installation, operation, and routine maintenance of closed circuit cooling towers.

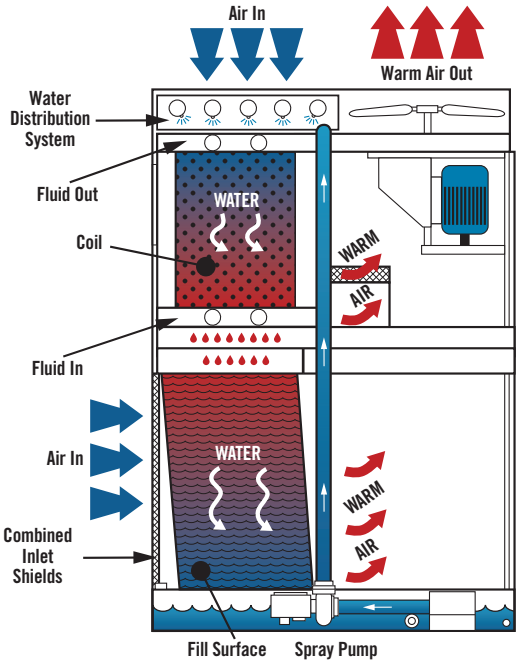

FXV Closed Circuit Cooling Tower

Four facets of the unique design of the FXV Closed Circuit Cooling Tower with Advanced Coil Technology contribute to the reduced propensity to scale:

- Air and water flow in parallel path
- Increased water flow over coil
- Evaporative cooling occurs primarily in fill
- Colder spray water

PRODUCT SPOTLIGHT:

Advanced Coil Technology

FXV Advanced Coil Technology

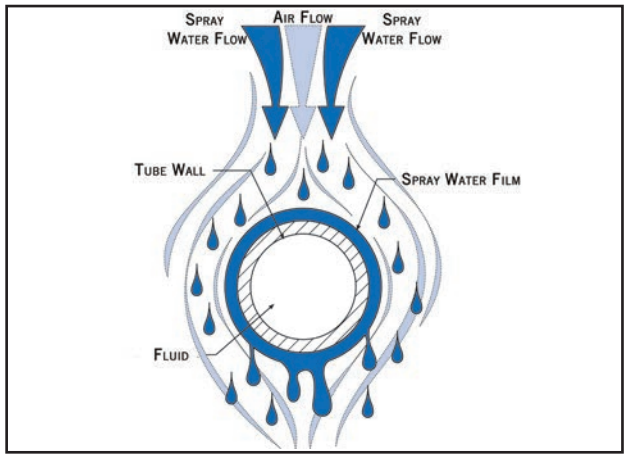

Other, Conventional Designs

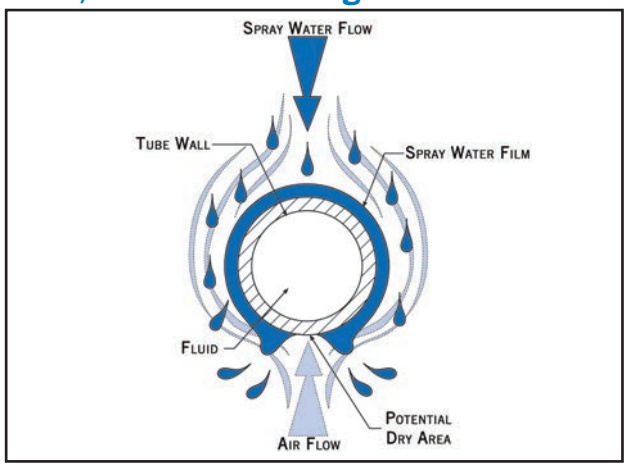

Principle of Operation

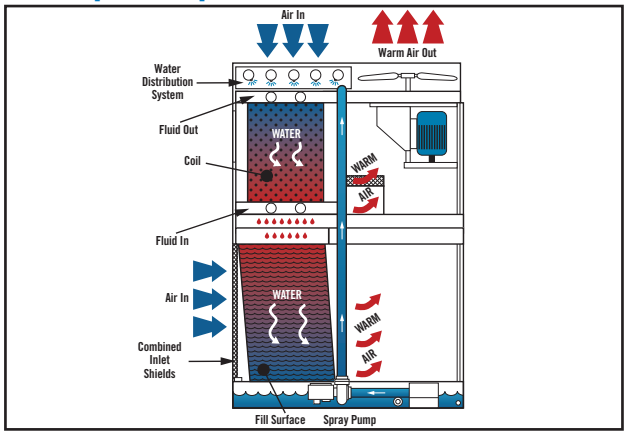

Air and Water Flow in Parallel Path

Better water coverage around the tubes is due to air and spray water flowing in a smooth, parallel, downward path over the coil, maintaining full tube coverage. With this parallel flow, the spray water is not stripped from the underside of the tubes by the airflow, eliminating scale-promoting dry spots.

Increased Water Flow Over Coil

The spray water flow rate over the coil area is more than twice that of a conventional closed circuit cooling tower. The FXV Closed Circuit Cooling Tower sprays water over the coil at 15 usgpm/ft^2 coil surface area compared to 4-5 usgpm/ft^2 coil surface area on a conventional closed circuit cooling tower. This provides continuous flooding of the primary heat transfer surface for decreased scaling potential. No increase in pump horsepower is required with this higher flow due to the unique heat transfer system of the FXV Closed Circuit Cooling Tower.

Evaporative Cooling Occurs Primarily in Fill

The FXV incorporates Combined Flow Technology using both primary and secondary heat transfer surfaces. The primary heat transfer surface, the serpentine coil, is the most important as well as the most expensive component in the closed circuit cooling tower. The coil is protected from detrimental scale since it relies primarily on sensible heat transfer and therefore is less susceptible to scale formation than other designs that rely primarily on latent (evaporative) heat transfer.

The technology behind the secondary heat transfer surface, the PVC fill, has been proven scale resistant and durable for more than 30 years in cooling tower applications. More than 80% of the latent heat transfer occurs in the secondary surface, moving the evaporation away from the primary heat transfer surface.

Colder Spray Water

Spray water at colder temperatures has a lower propensity to form scale because scaling compounds remain in solution rather than depositing as solids on the coil. In the FXV, the spray water over the coil is commonly 6˚F - 8˚F colder than other tower designs due to the addition of the secondary heat transfer surface. The colder spray water alone typically reduces the scaling potential* of the FXV by 25% compared to other designs. This is above and beyond the reduction achieved due to the first three phenomena discussed above.

› * Use Langelier Index

PRODUCT SPOTLIGHT:

Advanced Coil Technology

Effect of Scale on Closed Circuit Cooling Tower Performance

Even minimal amounts of scale on the coil surface will affect the performance of closed circuit cooling towers. Figure 1 illustrates the impact of scale build-up on a closed circuit cooling tower performance. With only 1/32" thick scale, the tower performance is robbed of 27% of its heat transfer capability. As scale thickness increases, capacity losses increase significantly.

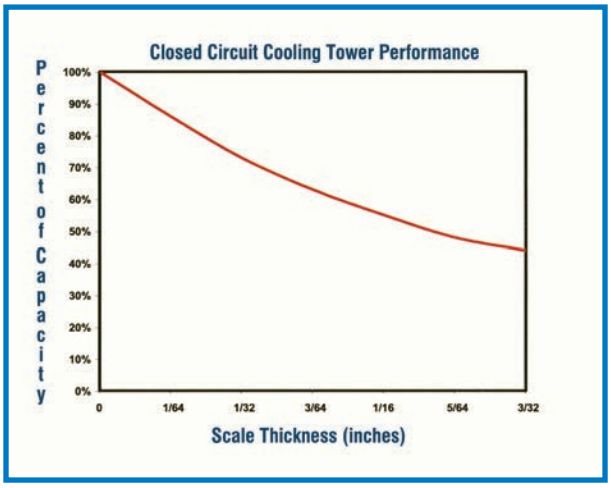

Figure 1

The Cost of Scale

Although the formation of scale is not always noticed by the system operator, a closed circuit cooling tower with a scaled-up coil must operate at higher fan speeds and forces other system components to work harder to make up for its shortcomings. In a cooling system, the burden is placed on the chipper. With scale build-up on the coil, the chiller consumes greater energy and system capacity is reduced. This will increase system-operating costs year-round, although it may go unnoticed until the system operates on the hottest days. In addition to lost throughput, the energy costs for 1/32" of scale on the coil are significant.