ACS800

Hardware Manual
ACS800-01 Drives (0.55 to 200 kW)
ACS800-U1 Drives (0.75 to 200 HP)

ABB

ACS800 Single Drive Manuals

HARDWARE MANUALS (appropriate manual is included in the delivery)

ACS800-01/U1 Hardware Manual 0.55 to 200 kW (0.75 to 200 HP) 3AFE64382101 (English)

ACS800-01/U1/04 Marine Supplement 0.55 to 160 kW (0.75 to 200 HP) 3AFE68291275 (English)

ACS800-11/U11 Hardware Manual 5.5 to 110 kW (7.5 to 125 HP) 3AFE68367883 (English)

ACS800-31/U31 Hardware Manual 5.5 to110 kW (7.5 to 125 HP) 3AFE68599954 (English)

ACS800-02/U2 Hardware Manual 90 to 500 kW (125 to 600 HP) 3AFE64567373 (English)

ACS800-04/U4 Hardware Manual 0.55 to 200 kW (0.75 to 200 HP) 3AFE68372984 (English)

ACS800-04/04M/U4 Hardware Manual 45 to 560 kW (60 to 600 HP) 3AFE64671006 (English)

ACS800-04/04M/U4 Cabinet Installation 45 to 560 kW (60 to 600 HP) 3AFE68360323 (English)

ACS800-07/U7 Hardware Manual 45 to 560 kW (50 to 600 HP) 3AFE64702165 (English)

ACS800-07/U7 Dimensional Drawings 45 to 560 kW (50 to 600 HP) 3AFE64775421

ACS800-07 Hardware Manual 500 to 2800 kW 3AFE64731165 (English)

ACS800-17 Hardware Manual 55 to 2500 kW (75 to 2800 HP) 3AFE68397260 (English)

ACS800-37 Hardware Manual 55 to 2700 kW (75 to 3000 HP) 3AFE68557925 (English)

- Safety instructions
- Electrical installation planning
- Mechanical and electrical installation
- Motor control and I/O board (RMIO)
- Maintenance
- Technical data
- Dimensional drawings
- Resistor braking

FIRMWARE MANUALS, SUPPLEMENTS AND GUIDES (appropriate documents are included in the delivery)

Standard Control Program Firmware Manual 3AFE64527592 (English)

System Control Program Firmware Manual 3AFE64670646 (English)

Application Program Template Firmware Manual 3AFE64616340 (English)

Master/Follower 3AFE64590430 (English)

Pump Control Program Firmware Manual 3AFE68478952 (English)

Extruder Control Program Supplement 3AFE64648543 (English)

Centrifuge Control Program Supplement 3AFE64667246 (English)

Traverse Control Program Supplement 3AFE64618334 (English)

Crane Control Program Firmware Manual 3BSE11179 (English)

Adaptive Programming Application Guide 3AFE64527274 (English)

OPTION MANUALS (delivered with optional equipment)

Fieldbus Adapters, I/O Extension Modules etc.

ACS800-01 Drives
0.55 to 200 kW
ACS800-U1 Drives
0.75 to 200 HP

Hardware Manual

3AFE64382101 Rev J EN
EFFECTIVE: 1.10.2008

Safety instructions

What this chapter contains

This chapter contains the safety instructions which you must follow when installing, operating and servicing the drive. If ignored, physical injury or death may follow, or damage may occur to the drive, motor or driven equipment. Read the safety instructions before you work on the unit.

Use of warnings and notes

There are two types of safety instructions throughout this manual: warnings and notes. Warnings caution you about conditions which can result in serious injury or death and/or damage to the equipment. They also tell you how to avoid the danger. Notes draw attention to a particular condition or fact, or give information on a subject. The warning symbols are used as follows:

Dangerous voltage warning warns of high voltage which can cause physical injury and/or damage to the equipment.

General warning warns about conditions, other than those caused by electricity, which can result in physical injury and/or damage to the equipment.

Electrostatic discharge warning warns of electrostatic discharge which can damage the equipment.

Hot surface warning warns of hot surfaces which can cause physical injury.

Installation and maintenance work

These warnings are intended for all who work on the drive, motor cable or motor.

WARNING! Ignoring the following instructions can cause physical injury or death, or damage to the equipment:

- **Only qualified electricians are allowed to install and maintain the drive.**
- Never work on the drive, motor cable or motor when main power is applied. After disconnecting the input power, always wait for 5 min to let the intermediate circuit capacitors discharge before you start working on the drive, motor or motor cable.

  Always ensure by measuring with a multimeter (impedance at least 1 Mohm) that:

  1. voltage between drive input phases U1, V1 and W1 and the frame is close to 0 V.
  2. voltage between terminals UDC+ and UDC- and the frame is close to 0 V.
- Do not work on the control cables when power is applied to the drive or to the external control circuits. Externally supplied control circuits may cause dangerous voltages inside the drive even when the main power on the drive is switched off.
- Do not make any insulation or voltage withstand tests on the drive or drive modules.
- When reconnecting the motor cable, always check that the phase order is correct.

Note:

- The motor cable terminals on the drive are at a dangerously high voltage when the input power is on, regardless of whether the motor is running or not.
- The brake control terminals (UDC+, UDC-, R+ and R- terminals) carry a dangerous DC voltage (over 500 V).
- Depending on the external wiring, dangerous voltages (115 V, 220 V or 230 V) may be present on the terminals of relay outputs RO1 to RO3 or on the optional AGPS board (Prevention of Unexpected Start, ACS800-01/U1, ACS800-04/04M, ACS800-11/U11, ACS800-31/U31).
- ACS800-02 with enclosure extension: The main switch on the cabinet door does not remove the voltage from the input busbars of the drive. Before working on the drive, isolate the whole drive from the supply.
- ACS800-01/U1, ACS800-04/04M, ACS800-11/U11, ACS800-31/U31: The Prevention of Unexpected Start function does not remove the voltage from the main and auxiliary circuits.

- At installation sites above 2000 m (6562 ft), the terminals of the RMIO board and optional modules attached to the board do not fulfil the Protective Extra Low Voltage (PELV) requirements stated in EN 50178.

Grounding

These instructions are intended for all who are responsible for the grounding of the drive.

WARNING! Ignoring the following instructions can cause physical injury, death, increased electromagnetic interference and equipment malfunction:

- Ground the drive, motor and adjoining equipment to ensure personnel safety in all circumstances, and to reduce electromagnetic emission and interference.
- Make sure that grounding conductors are adequately sized as required by safety regulations.
- In a multiple-drive installation, connect each drive separately to protective earth (PE).
- ACS800-01, ACS800-11, ACS800-31: In European CE compliant installations and in other installations where EMC emissions must be minimized, make a 360° high frequency grounding of cable entries in order to suppress electromagnetic disturbances. In addition, connect the cable shields to protective earth (PE) in order to meet safety regulations.

  ACS800-04 (45 to 560 kW) and ACS800-02 in first environment: make a 360° high frequency grounding of motor cable entries at the cabinet lead-through.
- Do not install a drive with EMC filter option +E202 or +E200 (available for ACS800-01 and ACS800-11, ACS800-31 only) on an ungrounded power system or a high-resistance-grounded (over 30 ohms) power system.

Note:

- Power cable shields are suitable for equipment grounding conductors only when adequately sized to meet safety regulations.
- As the normal leakage current of the drive is higher than 3.5 mA AC or 10 mA DC (stated by EN 50178, 5.2.11.1), a fixed protective earth connection is required.

Mechanical installation and maintenance

These instructions are intended for all who install and service the drive.

WARNING! Ignoring the following instructions can cause physical injury or death, or damage to the equipment:

- Handle the unit carefully.
- ACS800-01, ACS800-11, ACS800-31: The drive is heavy. Do not lift it alone. Do not lift the unit by the front cover. Place the unit only on its back.

  ACS800-02, ACS800-04: The drive is heavy. Lift the drive by the lifting lugs only. Do not tilt the unit. The unit will overturn from a tilt of about 6 degrees. Use extreme caution when manoeuvring a drive that runs on wheels. **An overturning unit can cause physical injury.**

Do not tilt!

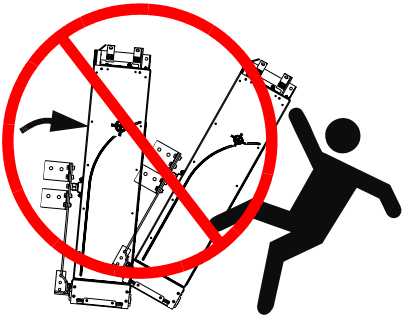

- Beware of hot surfaces. Some parts, such as heatsinks of power semiconductors, remain hot for a while after disconnection of the electrical supply.
- Make sure that dust from borings and grindings does not enter the drive when installing. Electrically conductive dust inside the unit may cause damage or malfunctioning.
- Ensure sufficient cooling.
- Do not fasten the drive by riveting or welding.

Printed circuit boards

WARNING! Ignoring the following instructions can cause damage to the printed circuit boards:

- The printed circuit boards contain components sensitive to electrostatic discharge. Wear a grounding wrist band when handling the boards. Do not touch the boards unnecessarily.

Fibre optic cables

WARNING! Ignoring the following instructions can cause equipment malfunction and damage to the fibre optic cables:

- Handle the fibre optic cables with care. When unplugging optic cables, always grab the connector, not the cable itself. Do not touch the ends of the fibres with bare hands as the fibre is extremely sensitive to dirt. The minimum allowed bend radius is 35 mm (1.4 in.).

Operation

These warnings are intended for all who plan the operation of the drive or operate the drive.

WARNING! Ignoring the following instructions can cause physical injury or death, or damage to the equipment:

- Before adjusting the drive and putting it into service, make sure that the motor and all driven equipment are suitable for operation throughout the speed range provided by the drive. The drive can be adjusted to operate the motor at speeds above and below the speed provided by connecting the motor directly to the power line.
- Do not activate automatic fault reset functions of the Standard Control Program if dangerous situations can occur. When activated, these functions will reset the drive and resume operation after a fault.
- Do not control the motor with the disconnecting device (disconnecting means); instead, use the control panel keys and , or commands via the I/O board of the drive. The maximum allowed number of charging cycles of the DC capacitors (i.e. power-ups by applying power) is five in ten minutes.

Note:

- If an external source for start command is selected and it is ON, the drive (with Standard Control Program) will start immediately after fault reset unless the drive is configured for 3-wire (a pulse) start/stop.
- When the control location is not set to Local (L not shown in the status row of the display), the stop key on the control panel will not stop the drive. To stop the drive using the control panel, press the LOC/REM key and then the stop key .

Permanent magnet motor

These are additional warnings concerning permanent magnet motor drives. Ignoring the instructions can cause physical injury or death, or damage to the equipment.

Installation and maintenance work

WARNING! Do not work on the drive when the permanent magnet motor is rotating. Also, when the supply power is switched off and the inverter is stopped, a rotating permanent magnet motor feeds power to the intermediate circuit of the drive and the supply connections become live.

Before installation and maintenance work on the drive:

- Stop the motor.
- Ensure that the motor cannot rotate during work. Prevent the start-up of any drives in the same mechanical group by opening the “prevention of unexpected start” switch and padlocking it. Make sure that no other system, like hydraulic crawling drives, are able to rotate the motor directly or through any mechanical connection like felt, nip, rope, etc.
- Ensure that there is no voltage on the drive power terminals:
  Alternative 1) Disconnect the motor from the drive with a safety switch or by other means. Measure that there is no voltage present on the drive input or output terminals (U1, V1, W1, U2, V2, W2, UDC+, UDC-).
  Alternative 2) Measure that there is no voltage present on the drive input or output terminals (U1, V1, W1, U2, V2, W2, UDC+, UDC-). Ground the drive output terminals temporarily by connecting them together as well as to the PE.
  Alternative 3) If possible, both of the above.

Start-up and operation

WARNING! Do not run the motor over the rated speed. Motor overspeed leads to overvoltage which may damage or explode the capacitors in the intermediate circuit of the drive.

Controlling a permanent magnet motor is only allowed using the control program for Permanent Magnet Synchronous Machine Drive, or other control programs in scalar control mode.

Table of contents

Planning the electrical installation

Electrical installation

Installation of AGPS board (Prevention of Unexpected Start, +Q950)

Motor control and I/O board (RMIO)

Installation checklist

Maintenance

Technical data

Resistor braking

External +24 V power supply for the RMIO board via terminal X34

About this manual

What this chapter contains

This chapter describes the intended audience and contents of this manual. It contains a flowchart of steps in checking the delivery, installing and commissioning the drive. The flowchart refers to chapters/sections in this manual and other manuals.

Intended audience

This manual is intended for people who plan the installation, install, commission, use and service the drive. Read the manual before working on the drive. The reader is expected to know the fundamentals of electricity, wiring, electrical components and electrical schematic symbols.

This manual is written for readers worldwide. Both SI and imperial units are shown. Special US instructions for installations within the United States that must be installed per the National Electrical Code and local codes are marked with (US).

Common chapters for several products

Chapters *Safety instructions*, *Planning the electrical installation*, *Motor control and I/O board (RMIO)* and *Resistor braking* apply to several ACS800 products which are listed at the beginning of the chapters.

Categorization according to the frame size

Some instructions, technical data and dimensional drawings which concern only certain frame sizes are marked with the symbol of the frame size R2, R3... or R8. The frame size is not marked on the drive designation label. To identify the frame size of your drive, see the rating tables in chapter *Technical data*.

The ACS800-01/U1 is manufactured in frame sizes R2 to R6.

Categorization according to the + code

The instructions, technical data and dimensional drawings which concern only certain optional selections are marked with + codes, e.g. +E202. The options included in the drive can be identified from the + codes visible on the type designation label of the drive. The + code selections are listed in chapter *The ACS800-01/U1* under *Type code*.

Contents

The chapters of this manual are briefly described below.

Safety instructions give safety instructions for the installation, commissioning, operation and maintenance of the drive.

About this manual lists the steps in checking the delivery and installing and commissioning the drive and refers to chapters/sections in this manual and other manuals for particular tasks.

The ACS800-01/U1 describes the drive.

Mechanical installation instructs how to place and mount the drive.

Planning the electrical installation instructs on the motor and cable selection, protections and cable routing.

Electrical installation shows how to wire the drive.

Installation of AGPS board (Prevention of Unexpected Start, +Q950) contains electrical installation instructions of the optional Prevention of Unexpected Start function (+Q950) of the drive and specifications of the board.

Motor control and I/O board (RMIO) shows the external control connections to the I/O board.

Installation checklist contains a list for checking the mechanical and electrical installation of the drive.

Maintenance contains preventive maintenance instructions.

Technical data contains the technical specifications of the drive, e.g. the ratings, sizes and technical requirements, provisions for fulfilling the requirements for CE and other markings and warranty policy.

Dimensional drawings contains the dimensional drawings of the drive.

Resistor braking describes how to select, protect and wire brake choppers and resistors. The chapter also contains the technical data.

External +24 V power supply for the RMIO board via terminal X34 describes how to connect an external +24 V power supply for the RMIO board using terminal X34.

Installation and commissioning flowchart

Task	See
Identify the frame size of your drive: R2, R3, R4, R5 or R6.	*Technical data / IEC data* or *NEMA data*
Plan the installation. Check the ambient conditions, ratings, required cooling air flow, input power connection, compatibility of the motor, motor connection, and other technical data. Select the cables.	*Technical data* *Planning the electrical installation* For compliance with the European Union EMC Directive, see *Technical data: CE marking* Option manual (if optional equipment is included)
Unpack and check the units. Check that all necessary optional modules and equipment are present and correct. Only intact units may be started up.	*Mechanical installation*: *Unpacking the unit*. If the converter has been non-operational for more than one year, the converter DC link capacitors need to be reformed. Ask ABB for instructions.
If the drive is about to be connected to an IT (ungrounded) system, check that the drive is not equipped with EMC filtering intended for grounded systems.	*The ACS800-01/U1*: *Type code*. For instructions on how to disconnect the EMC filtering, contact ABB.
Check the installation site.	*Mechanical installation: Before installation* *Technical data*
Install the drive on a wall or in a cabinet.	*Mechanical installation*
Route the cables.	*Planning the electrical installation: Routing the cables* For compliance with the European Union EMC Directive, see *Technical data: CE marking*

Task	See
Check the insulation of the motor and the motor cable.	*Electrical installation: Checking the insulation of the assembly*
Connect the power cables.	*Electrical installation*
Connect the control and the auxiliary control cables.	*Electrical installation, Motor control and I/O board (RMIO),* and the optional module manual delivered with the module.
Check the installation.	*Installation checklist*
Commission the drive.	Appropriate firmware manual
Commission the optional brake chopper (if present).	*Resistor braking*

Product and service inquiries

Address any inquiries about the product to your local ABB representative, quoting the type code and serial number of the unit in question. A listing of ABB sales, support and service contacts can be found by navigating to www.abb.com/drives and selecting *Sales, Support and Service network*.

Product training

For information on ABB product training, navigate to www.abb.com/drives and select *Training courses*.

Providing feedback on ABB Drives manuals

Your comments on our manuals are welcome. Go to www.abb.com/drives and select *Document Library – Manuals feedback form (LV AC drives)*.

The ACS800-01/U1

What this chapter contains

This chapter describes the operating principle and construction of the drive in short.

The ACS800-01/U1

The ACS800-01/U1 is a wall mountable drive for controlling AC motors.

IP 21 (UL type 1)

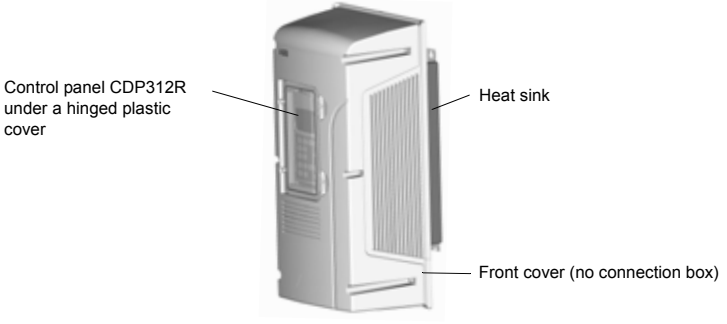

IP 55 (UL type 12)

Type code

The type code contains information on the specifications and configuration of the drive. The first digits from left express the basic configuration (e.g. ACS800-01-0006-5). The optional selections are given thereafter, separated by + signs (e.g. +E202). The main selections are described below. Not all selections are available for all types. For more information, refer to *ACS800 Ordering Information* (EN code: 64556568, available on request).

Selection	**Alternatives**	
Product series	ACS800 product series	
Type	01	wall mounted. When no options are selected: IP 21, Control Panel CDP312R, no EMC filter, Standard Control Program, cable connection box (cabling from below), brake chopper in frame sizes R2 and R3 (230/400/500 V units) and in frame size R4 (690 V units), boards without coating, one set of manuals.
	U1	wall mounted (USA). When no options are selected: UL type 1, Control Panel CDP312R, no EMC filter, US version of the Standard Control Program (three-wire start/stop as default setting), US gland/conduit box, brake chopper in frame sizes R2 and R3 (230/400/500 V units) and in frame size R4 (690 V units), boards without coating, one set of English manuals.
Size	Refer to *Technical data: IEC data* or *NEMA data*.	
Voltage range (nominal rating in bold)	2	208/220/**230**/240 V AC
	3	380/**400**/415 V AC
	5	380/400/415/440/460/480/**500** V AC
	7	525/575/600/**690** V AC
+ options		
Degree of protection	B056	IP 55 / UL type 12
Construction	C131	vibration dampers
	C132	marine type approved unit (coated boards included, +C131 required for frame sizes R4 to R6 in wall installations, +C131 not required in cabinet installations)
Resistor braking	D150	brake chopper
Filter	E200	EMC/RFI filter for second environment TN (grounded) system, drive category C3 (frame sizes R2…R5)
	E202	EMC/RFI filter for first environment TN (grounded) system, drive category C2
	E210	EMC/RFI filter for second environment TN/IT (grounded/ungrounded) system, drive category C3 (frame size R6 only)
Cabling	H358	US/UK gland/conduit box
Control panel	0J400	no control panel
Fieldbus	K...	Refer to *ACS800 Ordering Information* (EN code: 64556568).
I/O	L...	
Control program	N...	
Manual language	R...	
Safety features	Q950	Prevention of unexpected start
Specialities	P901	coated boards

Main circuit and control

Diagram

This diagram shows the control interfaces and the main circuit of the drive.

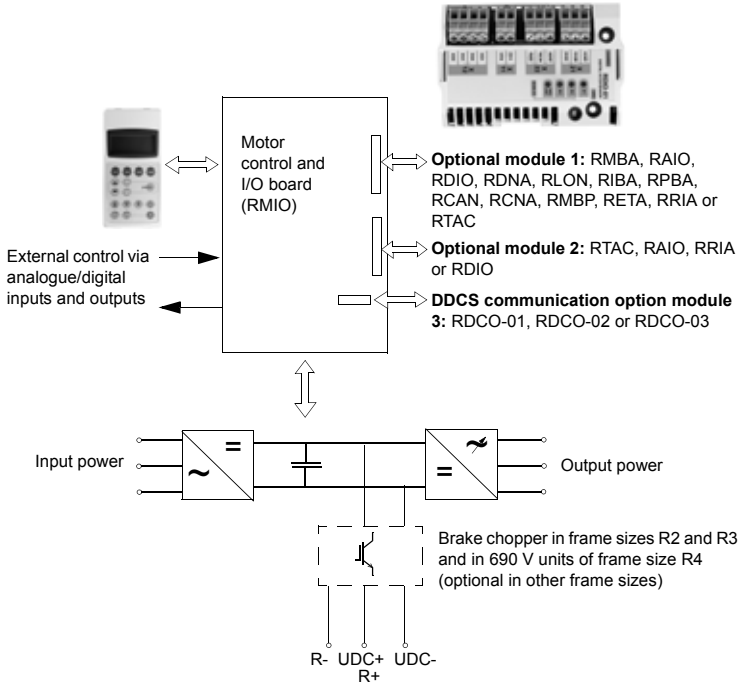

Operation

This table describes the operation of the main circuit in short.

Component	Description
six-pulse rectifier	converts the three-phase AC voltage to DC voltage
capacitor bank	energy storage which stabilizes the intermediate circuit DC voltage
IGBT inverter	converts the DC voltage to AC voltage and vice versa. The motor operation is controlled by switching the IGBTs.

Printed circuit boards

The drive contains the following printed circuit boards as standard:

- main circuit board (RINT)
- motor control and I/O board (RMIO)
- EMC filter board (RRFC) when EMC equipment is selected or varistor board (RVAR) otherwise
- control panel (CDP 312R).

Motor control

The motor control is based on the Direct Torque Control (DTC) method. Two phase currents and DC link voltage are measured and used for the control. The third phase current is measured for earth fault protection.

Mechanical installation

Unpacking the unit

The drive is delivered in a box that also contains:

- plastic bag containing: screws (M3), clamps and cable lugs (2 mm^2, M3) for grounding the control cable screens
- connection box (screws, clamps and vibration dampers with +C131 included)
- residual voltage warning stickers
- hardware manual
- appropriate firmware manuals and guides
- optional module manuals
- delivery documents.

Unpack the unit of frame sizes R2 to R5 (IP 21, UL type 1) as follows.

Delivery check

Check that there are no signs of damage. Before attempting installation and operation, check the information on the type designation label of the drive to verify that the unit is of the correct type. The label includes an IEC and NEMA rating, UL, C-UL, CSA and CE markings, a type code and a serial number, which allow individual recognition of each unit. The first digit of the serial number refers to the manufacturing plant. The next four digits refer to the unit's manufacturing year and week, respectively. The remaining digits complete the serial number so that there are no two units with the same serial number.

The type designation label is attached to the heat sink and the serial number label to the upper part of the back plate of the unit. Example labels are shown below.

Type designation label

Serial number label

Before installation

The drive must be installed in an upright position with the cooling section facing a wall. Check the installation site according to the requirements below. Refer to *Dimensional drawings* for frame details.

Requirements for the installation site

See *Technical data* for the allowed operation conditions of the drive.

Wall

The wall should be as close to vertical as possible, of non-flammable material and strong enough to carry the weight of the unit. Check that there is nothing on the wall to inhibit the installation.

Floor

The floor/material below the installation should be non-flammable.

Free space around the unit

Required free space around the drive to enable cooling air flow, service and maintenance is shown below in millimetres and [inches]. When mounting IP 55 units above one another, leave 200 mm (7.9 in.) free space above and below the unit.

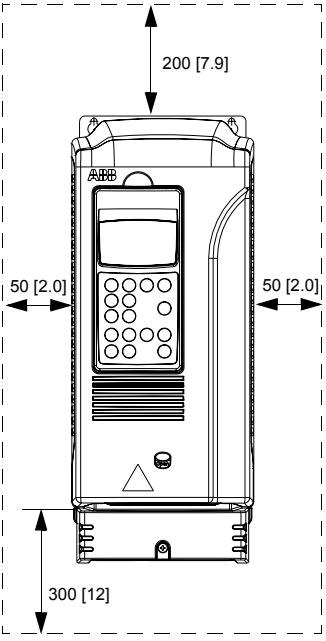

IP 21 (UL 1)

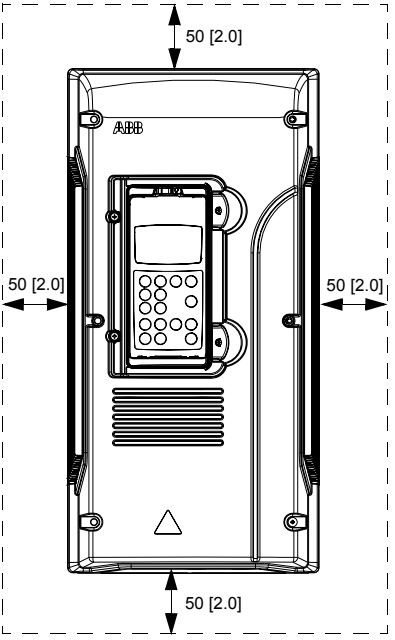

IP 55 (UL 12)

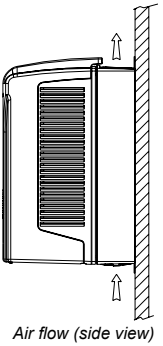

Air flow (side view)

Mounting the drive on the wall

Units without vibration dampers

1. Mark the locations for the four holes. The mounting points are shown in *Dimensional drawings*. In frame sizes R2 to R5 (IP 21, UL type 1), use the mounting template cut from the package.
2. Fix the screws or bolts to the marked locations.
3. IP 55 (UL type 12) units: Remove the front cover by undoing the fixing screws.
4. Position the drive onto the screws on the wall. **Note:** Lift the drive by its chassis (R6: by its lifting holes), not by its cover.
5. Tighten the screws in the wall securely.

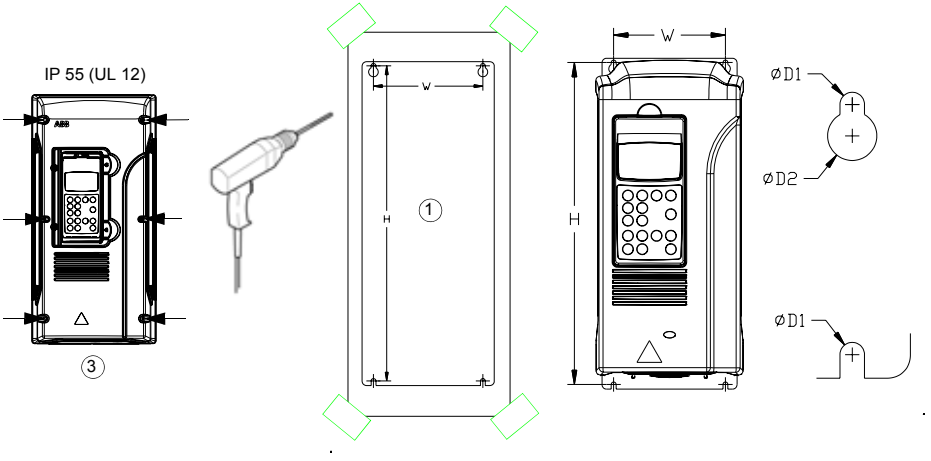

IP 55 (UL type 12) marine applications (+C132) of frame sizes R4 to R6

See *ACS800-01/U1 Marine Supplement* [3AFE68291275 (English)].

Units with vibration dampers (+C131)

See *ACS800-01/U1 Vibration Damper Installation Guide* [3AFE68295351 (English)].

UL 12 units

Install the hood delivered with the drive 50 mm (2.0 in.) above the top of unit.

Cabinet installation

For better cooling, it is recommended to remove the front cover if the unit is installed into a cabinet. The required distance between parallel units is five millimetres (0.2 in.) in installations without the front cover. The cooling air entering the unit must not exceed +40 °C (+104 °F).

Preventing cooling air recirculation

Prevent air recirculation inside and outside the cabinet.

Example

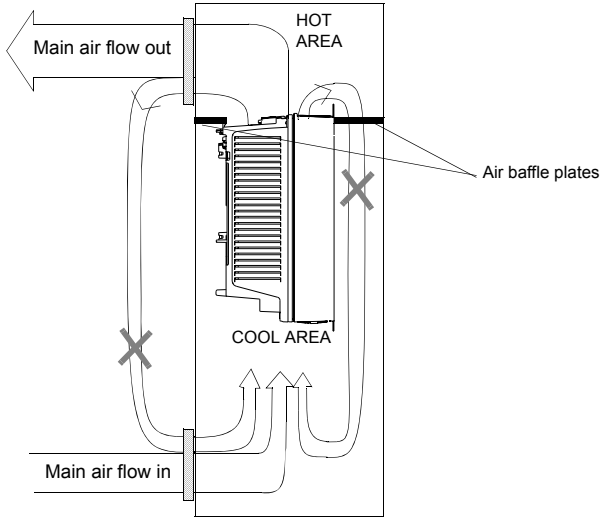

Unit above another

Lead the out-coming cooling air away from the unit above.

Example

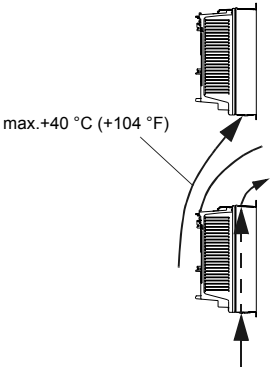

Planning the electrical installation

What this chapter contains

This chapter contains the instructions that you must follow when selecting the motor, cables, protections, cable routing and way of operation for the drive system.

Note: The installation must always be designed and made according to applicable local laws and regulations. ABB does not assume any liability whatsoever for any installation which breaches the local laws and/or other regulations. Furthermore, if the recommendations given by ABB are not followed, the drive may experience problems that the warranty does not cover.

Motor selection and compatibility

1. Select the motor according to the rating tables in chapter *Technical Data*. Use the DriveSize PC tool if the default load cycles are not applicable.
2. Check that the motor ratings lie within the allowed ranges of the drive control program:
   - motor nominal voltage is 1/2 ... 2 · U_N of the drive
   - motor nominal current is 1/6 ... 2 · I_{2hd} of the drive in DTC control and 0 ... 2 · I_{2hd} in scalar control. The control mode is selected by a drive parameter.
3. Check that the motor voltage rating meets the application requirements:

Resistor braking	Motor voltage rating
no resistor braking is in use	U_N
frequent or long term brake cycles will be used	U_{ACeq1}

U_N = rated input voltage of the drive
U_{ACeq1} = $U_{DC}/1.35$

U_{ACeq} is the equivalent AC power source voltage of the drive in V AC.
U_{DC} is the maximum DC link voltage of the drive in V DC.
For resistor braking: U_{DC}= 1.21 × nominal DC link voltage.
For units with IGBT supply: See the parameter value.
(**Note:** Nominal DC link voltage is U_N × 1.35 or U_N × 1.41 in V DC.)

See notes 6 and 7 below the *Requirements table*, page *37*.

4. Consult the motor manufacturer before using a motor in a drive system where the motor nominal voltage differs from the AC power source voltage.
5. Ensure that the motor insulation system withstands the maximum peak voltage in the motor terminals. See the *Requirements table* below for the required motor insulation system and drive filtering.

Example 1: When the supply voltage is 440 V and a drive with a diode supply is operating in motor mode only, the maximum peak voltage in the motor terminals can be approximated as follows: 440 V · 1.35 · 2 = 1190 V. Check that the motor insulation system withstands this voltage.

Example 2: When the supply voltage is 440 V and the drive is equipped with an IGBT supply, the maximum peak voltage in the motor terminals can be approximated as follows: 440 V · 1.41 · 2 = 1241 V. Check that the motor insulation system withstands this voltage.

Protecting the motor insulation and bearings

The output of the drive comprises – regardless of output frequency – pulses of approximately 1.35 times the equivalent mains network voltage with a very short rise time. This is the case with all drives employing modern IGBT inverter technology.

The voltage of the pulses can be almost double at the motor terminals, depending on the attenuation and reflection properties of the motor cable and the terminals. This in turn can cause additional stress on the motor and motor cable insulation.

Modern variable speed drives with their fast rising voltage pulses and high switching frequencies can generate current pulses that flow through the motor bearings, which can gradually erode the bearing races and rolling elements.

The stress on motor insulation can be avoided by using optional ABB du/dt filters. du/dt filters also reduce bearing currents.

To avoid damage to motor bearings, the cables must be selected and installed according to the instructions given in the hardware manual. In addition, insulated N-end (non-driven end) bearings and output filters from ABB must be used according to the following table. Two types of filters are used individually or in combinations:

- optional du/dt filter (protects motor insulation system and reduces bearing currents).
- common mode filter (mainly reduces bearing currents).

Requirements table

The following table shows how to select the motor insulation system and when an optional ABB du/dt filter, insulated N-end (non-driven end) motor bearings and ABB common mode filters are required. The motor manufacturer should be consulted regarding the construction of the motor insulation and additional requirements for explosion-safe (EX) motors. Failure of the motor to fulfil the following requirements or improper installation may shorten motor life or damage the motor bearings and voids the warranty.

Manufacturer	Motor type	Nominal mains voltage (AC line voltage)	Requirement for			
			Motor insulation system	**ABB du/dt filter, insulated N-end bearing and ABB common mode filter**		
				P_N < 100 kW and frame size < IEC 315	**100 kW ≤ P_N < 350 kW** or frame size ≥ IEC 315	**P_N ≥ 350 kW** or frame size ≥ IEC 400
				P_N < 134 HP and frame size < NEMA 500	**134 HP ≤ P_N < 469 HP** or frame size ≥ NEMA 500	**P_N ≥ 469 HP** or frame size > NEMA 580
ABB	Random-wound M2_ and M3_	U_N ≤ 500 V	Standard	-	+ N	+ N + CMF
		500 V < U_N ≤ 600 V	Standard	+ du/dt	+ du/dt + N	+ du/dt + N + CMF
			or			
			Reinforced	-	+ N	+ N + CMF
		600 V < U_N ≤ 690 V	Reinforced	+ du/dt	+ du/dt + N	+ du/dt + N + CMF
	Form-wound HX_ and AM_	380 V < U_N ≤ 690 V	Standard	n.a.	+ N + CMF	P_N < 500 kW: + N + CMF
						P_N ≥ 500 kW: + N + CMF + du/dt
	Old* form-wound HX_ and modular	380 V < U_N ≤ 690 V	Check with the motor manufacturer.	+ du/dt with voltages over 500 V + N + CMF		
	Random-wound HX_ and AM_ **	0 V < U_N ≤ 500 V	Enamelled wire with fibre glass taping	+ N + CMF		
		500 V < U_N ≤ 690 V		+ du/dt + N + CMF		

Manufacturer	Motor type	Nominal mains voltage (AC line voltage)	Requirement for			
			Motor insulation system	**ABB du/dt filter, insulated N-end bearing and ABB common mode filter**		
				P_N < 100 kW and frame size < IEC 315	**100 kW ≤ P_N < 350 kW** or frame size ≥ IEC 315	**P_N ≥ 350 kW** or frame size ≥ IEC 400
				P_N < 134 HP and frame size < NEMA 500	**134 HP ≤ P_N < 469 HP** or frame size ≥ NEMA 500	**P_N ≥ 469 HP** or frame size > NEMA 580
NON-ABB	Random-wound and form-wound	U_N ≤ 420 V	Standard: $\hat{U}_{LL}$ = 1300 V	-	+ N or CMF	+ N + CMF
		420 V < U_N ≤ 500 V	Standard: $\hat{U}_{LL}$ = 1300 V	+ du/dt	+ du/dt + N or + du/dt + CMF	+ du/dt + N + CMF
			or			
			Reinforced: $\hat{U}_{LL}$ = 1600 V, 0.2 microsecond rise time	-	+ N or CMF	+ N + CMF
		500 V < U_N ≤ 600 V	Reinforced: $\hat{U}_{LL}$ = 1600 V	+ du/dt	+ du/dt + N or + du/dt + CMF	+ du/dt + N + CMF
			or			
			Reinforced: $\hat{U}_{LL}$ = 1800 V	-	+ N or CMF	+ N + CMF
		600 V < U_N ≤ 690 V	Reinforced: $\hat{U}_{LL}$ = 1800 V	+ du/dt	+ du/dt + N	+ du/dt + N + CMF
			Reinforced: $\hat{U}_{LL}$ = 2000 V, 0.3 microsecond rise time ***	-	N + CMF	N + CMF

* manufactured before 1.1.1998

** For motors manufactured before 1.1.1998, check for additional instructions with the motor manufacturer.

*** If the intermediate DC circuit voltage of the drive is increased from the nominal level by resistor braking or by the IGBT Supply Control Program (parameter selectable function), check with the motor manufacturer if additional output filters are needed in the applied drive operation range.

Note 1: The abbreviations used in the table are defined below.

Abbreviation	Definition
U_N	nominal voltage of the supply network
$\hat{U}_{LL}$	peak line-to-line voltage at motor terminals which the motor insulation must withstand
P_N	motor nominal power
du/dt	du/dt filter at the output of the drive +E205
CMF	common mode filter +E208
N	N-end bearing: insulated motor non-driven end bearing
n.a.	Motors of this power range are not available as standard units. Consult the motor manufacturer.

Note 2: *Explosion-safe (EX) motors*

The motor manufacturer should be consulted regarding the construction of the motor insulation and additional requirements for explosion-safe (EX) motors.

Note 3: *High-output motors and IP 23 motors*

For motors with higher rated output than what is stated for the particular frame size in EN 50347 (2001) and for IP 23 motors, the requirements of ABB random-wound motor series M3AA, M3AP, M3BP are given below. For other motor types, see the *Requirements table* above. Apply the requirements of range **100 kW < P_N < 350 kW** to motors with P_N < 100 kW. Apply the requirements of range **P_N ≥ 350 kW** to motors within the range **100 kW < P_N < 350 kW**. In other cases, consult the motor manufacturer.

Manufacturer	Motor type	Nominal mains voltage (AC line voltage)	Requirement for			
			Motor insulation system	ABB du/dt filter, insulated N-end bearing and ABB common mode filter		
				P_N < 55 kW	55 kW ≤ P_N < 200 kW	P_N ≥ 200 kW
				P_N < 74 HP	74 HP ≤ P_N < 268 HP	P_N ≥ 268 HP
ABB	Random-wound M3AA, M3AP, M3BP	U_N ≤ 500 V	Standard	-	+ N	+ N + CMF
		500 V < U_N ≤ 600 V	Standard	+ du/dt	+ du/dt + N	+ du/dt + N + CMF
			or			
			Reinforced	-	+ N	+ N + CMF
		600 V < U_N ≤ 690 V	Reinforced	+ du/dt	+ du/dt + N	+ du/dt + N + CMF

Note 4: *HXR and AMA motors*

All AMA machines (manufactured in Helsinki) for drive systems have form-wound windings. All HXR machines manufactured in Helsinki starting 1.1.1998 have form-wound windings.

Note 5: *ABB motors of types other than M2_, M3_, HX_ and AM_*

Use the selection criteria given for non-ABB motors.

Note 6: *Resistor braking of the drive*

When the drive is in braking mode for a large part of its operation time, the intermediate circuit DC voltage of the drive increases, the effect being similar to increasing the supply voltage by up to 20 percent. The voltage increase should be taken into consideration when determining the motor insulation requirement.

Example: Motor insulation requirement for a 400 V application must be selected as if the drive were supplied with 480 V.

Note 7: *Drives with an IGBT supply unit*

If voltage is raised by the drive (this is a parameter selectable function), select the motor insulation system according to the increased intermediate circuit DC voltage level, especially in the 500 V supply voltage range.

Note 8: *Calculating the rise time and the peak line-to-line voltage*

The peak line-to-line voltage at the motor terminals generated by the drive as well as the voltage rise time depend on the cable length. The requirements for the motor insulation system given in the table are “worst case” requirements covering installations with 30 metre and longer cables. The rise time can be calculated as follows: $\triangle t = 0.8 \cdot \hat{U}_{LL}/(du/dt)$. Read $\hat{U}_{LL}$ and du/dt from the diagrams below. Multiply the values of the graph by the supply voltage (U_N). In case of drives with an IGBT supply unit or resistor braking, the $\hat{U}_{LL}$ and du/dt values are approximately 20% higher.

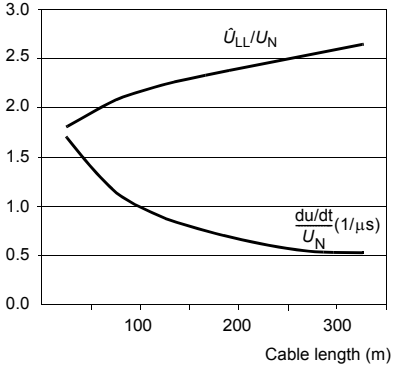

With du/dt Filter

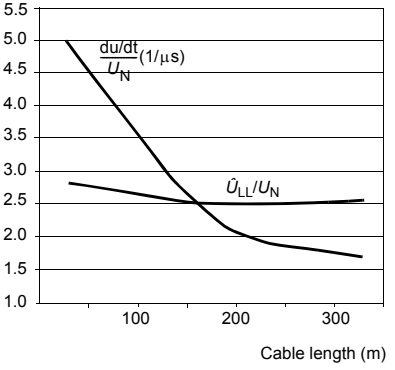

Without du/dt Filter

Note 9: Sine filters protect the motor insulation system. Therefore, du/dt filter can be replaced with a sine filter. The peak phase-to-phase voltage with the sine filter is approximately 1.5 × U_N.

Note 10: Common mode filter is available as a plus code option (+E208) or as a separate kit (one box including three rings for one cable).

Permanent magnet synchronous motor

Only one permanent magnet motor can be connected to the inverter output.

It is recommended to install a safety switch between the permanent magnet synchronous motor and the drive output. The switch is needed to isolate the motor during any maintenance work on the drive.

Supply connection

Disconnecting device (disconnecting means)

Install a hand-operated input disconnecting device (disconnecting means) between the AC power source and the drive. The disconnecting device must be of a type that can be locked to the open position for installation and maintenance work.

EU

To meet the European Union Directives, according to standard EN 60204-1, Safety of Machinery, the disconnecting device must be one of the following types:

- switch-disconnector of utilization category AC-23B (EN 60947-3)
- disconnector that has an auxiliary contact that in all cases causes switching devices to break the load circuit before the opening of the main contacts of the disconnector (EN 60947-3)
- circuit breaker suitable for isolation in accordance with EN 60947-2.

US

The disconnecting means must conform to the applicable safety regulations.

Fuses

See section *Thermal overload and short-circuit protection*.

Main contactor

If used, dimension the contactor according to the nominal voltage and current of the drive. The utilization category (IEC 947-4) is AC-1.

Thermal overload and short-circuit protection

Thermal overload protection of the drive and the input and motor cables

The drive protects itself and the input and motor cables against thermal overload when the cables are dimensioned according to the nominal current of the drive. No additional thermal protection devices are needed.

WARNING! If the drive is connected to multiple motors, a separate thermal overload switch or a circuit breaker must be used for protecting each cable and motor. These devices may require a separate fuse to cut off the short-circuit current.

Thermal overload protection of the motor

According to regulations, the motor must be protected against thermal overload and the current must be switched off when overload is detected. The drive includes a motor thermal protection function that protects the motor and switches off the current when necessary. Depending on a drive parameter value, the function either monitors a calculated temperature value (based on a motor thermal model) or an actual temperature indication given by motor temperature sensors. The user can tune the thermal model further by feeding in additional motor and load data.

The most common temperature sensors are:

- motor sizes IEC180…225: thermal switch (e.g. Klixon)
- motor sizes IEC200…250 and larger: PTC or Pt100.

See the firmware manual for more information on the motor thermal protection, and the connection and use of the temperature sensors.

Protection against short-circuit in the motor cable

The drive protects the motor cable and motor in a short-circuit situation when the motor cable is dimensioned according to the nominal current of the drive. No additional protection devices are needed.

Protection against short-circuit inside the drive or in the supply cable

Protect the drive and input cable with fuses or a circuit breaker.

Circuit diagram
DRIVE IS NOT EQUIPPED WITH INPUT FUSES

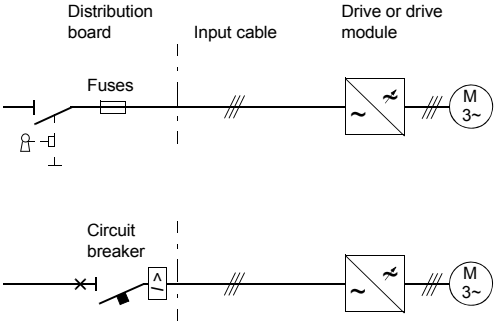

Fuses

Size the fuses according to instructions given in chapter *Technical data.* The fuses will protect the input cable in short-circuit situations, restrict drive damage and prevent damage to adjoining equipment in case of a short-circuit inside the drive.Circuit breakers which have been tested by ABB with the ACS800 can be used. Fuses must be used with other circuit breakers. Contact your local ABB representative for the approved breaker types and supply network characteristics.

Circuit breaker

The protective characteristics of circuit breakers depend on the type, construction and settings of the breakers. There are also limitations pertaining to the short-circuit capacity of the supply network.

WARNING! Due to the inherent operating principle and construction of circuit breakers, independent of the manufacturer, hot ionized gases may escape from the breaker enclosure in case of a short-circuit. To ensure safe use, special attention must be paid to the installation and placement of the breakers. Follow the manufacturer's instructions.

Note: Circuit breakers must not be used without fuses in the USA.

Ground fault protection

The drive is equipped with an internal ground fault protective function to protect the unit against ground faults in the motor and motor cable. This is not a personal safety or a fire protection feature. The ground fault protective function can be disabled with a parameter, refer to the appropriate *ACS800 Firmware Manual*.

The EMC filter of the drive includes capacitors connected between the main circuit and the frame. These capacitors and long motor cables increase the ground leakage current and may cause fault current circuit breakers to function.

Prevention of Unexpected Start

The drive can be equipped with an optional Prevention of Unexpected Start function according to standards IEC/EN 60204-1: 1997; ISO/DIS 14118: 2000 and EN 1037: 1996.

The Prevention of Unexpected Start function disables the control voltage of the power semiconductors, thus preventing the inverter from generating the AC voltage required to rotate the motor. By using this function, short-time operations (like cleaning) and/or maintenance work on non-electrical parts of the machinery can be performed without switching off the AC power supply to the drive.

The operator activates the Prevention of Unexpected Start function by opening a switch on a control desk. An indicating lamp on the control desk will light, signalling that the prevention is active. The switch can be locked out.

The user must install on a control desk near the machinery:

- switching/disconnecting device for the circuitry. “Means shall be provided to prevent inadvertent, and/or mistaken closure of the disconnecting device.” EN 60204-1: 1997.
- indicating lamp; on = starting the drive is prevented, off = drive is operative.
- safety relay (type BD5935 has been approved by ABB)

For connections to the drive, see chapter *Installation of AGPS board (Prevention of Unexpedted Start, +Q950)*.

WARNING! The Prevention of Unexpected Start function does not disconnect the voltage of the main and auxiliary circuits from the drive. Therefore maintenance work on electrical parts of the drive or the motor can only be carried out after isolating the drive system from the main supply.

Note: If a running drive is stopped by using the Prevention of Unexpected Start function, the drive will cut off the motor supply voltage and the motor will coast to stop.

Selecting the power cables

General rules

Dimension the mains (input power) and motor cables **according to local regulations**:

- The cable must be able to carry the drive load current. See chapter *Technical data* for the rated currents.
- The cable must be rated for at least 70 °C maximum permissible temperature of conductor in continuous use. For US, see *Additional US requirements*.
- The inductance and impedance of the PE conductor/cable (grounding wire) must be rated according to permissible touch voltage appearing under fault conditions (so that the fault point voltage will not rise excessively when a ground fault occurs).
- 600 V AC cable is accepted for up to 500 V AC. 750 V AC cable is accepted for up to 600 V AC. For 690 V AC rated equipment, the rated voltage between the conductors of the cable should be at least 1 kV.

For drive frame size R5 and larger, or motors larger than 30 kW (40 HP), symmetrical shielded motor cable must be used (figure below). A four-conductor system can be used up to frame size R4 with up to 30 kW (40 HP) motors, but shielded symmetrical motor cable is always recommended. The shield(s) of motor cable(s) must have 360° bonding at both ends.

Note: When continuous metal conduit is employed, shielded cable is not required. The conduit must have bonding at both ends as with cable shield.

A four-conductor system is allowed for input cabling, but shielded symmetrical cable is recommended. To operate as a protective conductor, the shield conductivity must be as follows when the protective conductor is made of the same metal as the phase conductors:

Cross-sectional area of the phase conductors **S (mm^2)**	**Minimum cross-sectional area of the corresponding protective conductor** **S_p (mm^2)**
$S \leq 16$	S
$16 < S \leq 35$	16
$35 < S$	S/2

Compared to a four-conductor system, the use of symmetrical shielded cable reduces electromagnetic emission of the whole drive system as well as the stress on motor insulation, bearing currents and wear.

The motor cable and its PE pigtail (twisted shield) should be kept as short as possible in order to reduce high-frequency electromagnetic emission, as well as stray currents outside the cable and capacitive current (relevant in power range below 20 kW).

Alternative power cable types

Power cable types that can be used with the drive are represented below.

Recommended

Symmetrical shielded cable: three phase conductors and a concentric or otherwise symmetrically constructed PE conductor, and a shield

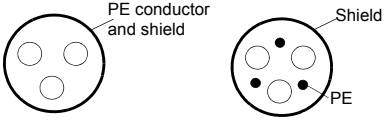

A separate PE conductor is required if the conductivity of the cable shield is < 50% of the conductivity of the phase conductor.

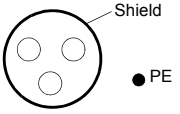

A four-conductor system: three phase conductors and a protective conductor

Not allowed for motor cables

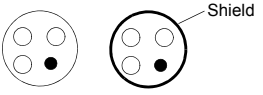

Not allowed for motor cables with phase conductor cross section larger than 10 mm^2 [motors > 30 kW (40 HP)].

Motor cable shield

To effectively suppress radiated and conducted radio-frequency emissions, the shield conductivity must be at least 1/10 of the phase conductor conductivity. The requirements are easily met with a copper or aluminium shield. The minimum requirement of the motor cable shield of the drive is shown below. It consists of a concentric layer of copper wires with an open helix of copper tape or copper wire. The better and tighter the shield, the lower the emission level and bearing currents.

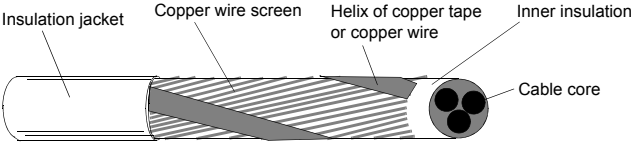

Additional US requirements

Type MC continuous corrugated aluminum armor cable with symmetrical grounds or shielded power cable must be used for the motor cables if metallic conduit is not used. For the North American market, 600 V AC cable is accepted for up to 500 V AC. 1000 V AC cable is required above 500 V AC (below 600 V AC). For drives rated over 100 amperes, the power cables must be rated for 75 °C (167 °F).

Conduit

Separate parts of a conduit must be coupled together, bridge the joints with a ground conductor bonded to the conduit on each side of the joint. Bond the conduits also to the drive enclosure and motor frame. Use separate conduits for input power, motor, brake resistor, and control wiring. When conduit is employed, type MC continuous corrugated aluminium armor cable or shielded cable is not required. A dedicated ground cable is always required.

Note: Do not run motor wiring from more than one drive in the same conduit.

Armored cable / shielded power cable

Six conductor (3 phases and 3 ground) type MC continuous corrugated aluminum armor cable with symmetrical grounds is available from the following suppliers (trade names in parentheses):

- Anixter Wire & Cable (Philsheath)
- BICC General Corp (Philsheath)
- Rockbestos Co. (Gardex)
- Oaknite (CLX).

Shielded power cables are available from Belden, LAPPKABEL (ÖLFLEX) and Pirelli.

Power factor compensation capacitors

Power factor compensation is not needed with AC drives. However, if a drive is to be connected in a system with compensation capacitors installed, note the following restrictions.

WARNING! Do not connect power factor compensation capacitors or harmonic filters to the motor cables (between the drive and the motor). They are not meant to be used with AC drives and can cause permanent damage to the drive or themselves.

If there are power factor compensation capacitors in parallel with the three phase input of the drive:

1. Do not connect a high-power capacitor to the power line while the drive is connected. The connection will cause voltage transients that may trip or even damage the drive.
2. If capacitor load is increased/decreased step by step when the AC drive is connected to the power line: Ensure that the connection steps are low enough not to cause voltage transients that would trip the drive.
3. Check that the power factor compensation unit is suitable for use in systems with AC drives i.e. harmonic generating loads. In such systems, the compensation unit should typically be equipped with a blocking reactor or harmonic filter.

Equipment connected to the motor cable

Installation of safety switches, contactors, connection boxes, etc.

To minimize the emission level when safety switches, contactors, connection boxes or similar equipment are installed in the motor cable between the drive and the motor:

- EU: Install the equipment in a metal enclosure with 360 degrees grounding for the shields of both the incoming and outgoing cable, or connect the shields of the cables otherwise together.
- US: Install the equipment in a metal enclosure in a way that the conduit or motor cable shielding runs consistently without breaks from the drive to the motor.

Bypass connection

WARNING! Never connect the supply power to the drive output terminals U2, V2 and W2. If frequent bypassing is required, employ mechanically connected switches or contactors. Mains (line) voltage applied to the output can result in permanent damage to the unit.

Before opening a contactor (DTC control mode selected)

Stop the drive and wait for the motor to stop before opening a contactor between the output of the drive and the motor when the DTC control mode is selected. See the appropriate ACS800 control program firmware manual for the required parameter settings. Otherwise, the contactor will be damaged. In scalar control, the contactor can be opened with the drive running.

Protecting the relay output contacts and attenuating disturbances in case of inductive loads

Inductive loads (relays, contactors, motors) cause voltage transients when switched off.

The relay contacts on the RMIO board are protected with varistors (250 V) against overvoltage peaks. In spite of this, it is highly recommended to equip inductive loads with noise attenuating circuits [varistors, RC filters (AC) or diodes (DC)] in order to minimize the EMC emission at switch-off. If not suppressed, the disturbances may connect capacitively or inductively to other conductors in the control cable and form a risk of malfunction in other parts of the system.

Install the protective component as close to the inductive load as possible. Do not install protective components at the RMIO board terminal block.

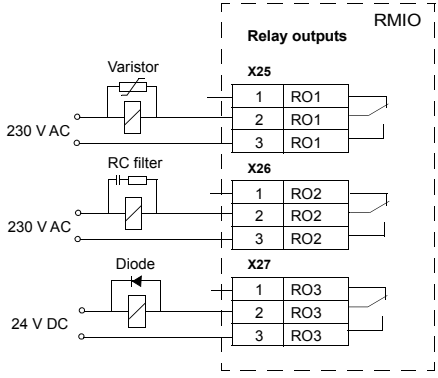

Selecting the control cables

All control cables must be shielded.

Use a double-shielded twisted pair cable (Figure a, e.g. JAMAK by NK Cables, Finland) for analogue signals. This type of cable is recommended for the pulse encoder signals also. Employ one individually shielded pair for each signal. Do not use common return for different analogue signals.

A double-shielded cable is the best alternative for low-voltage digital signals but single-shielded twisted pair cable (Figure b) is also usable.

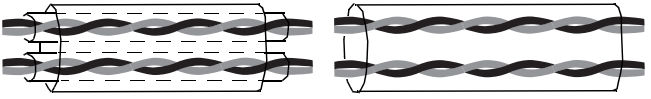

a
A double-shielded twisted pair cable

b
A single-shielded twisted pair cable

Run analogue and digital signals in separate, shielded cables.

Relay-controlled signals, providing their voltage does not exceed 48 V, can be run in the same cables as digital input signals. It is recommended that the relay-controlled signals be run as twisted pairs.

Never mix 24 V DC and 115/230 V AC signals in the same cable.

Relay cable

The cable type with braided metallic screen (e.g. ÖLFLEX by LAPPKABEL, Germany) has been tested and approved by ABB.

Control panel cable

In remote use, the cable connecting the control panel to the drive must not exceed 3 metres (10 ft). The cable type tested and approved by ABB is used in control panel option kits.

Connection of a motor temperature sensor to the drive I/O

WARNING! IEC 60664 requires double or reinforced insulation between live parts and the surface of accessible parts of electrical equipment which are either non-conductive or conductive but not connected to the protective earth.

To fulfil this requirement, the connection of a thermistor (and other similar components) to the digital inputs of the drive can be implemented in three alternate ways:

1. There is double or reinforced insulation between the thermistor and live parts of the motor.
2. Circuits connected to all digital and analogue inputs of the drive are protected against contact and insulated with basic insulation (the same voltage level as the drive main circuit) from other low voltage circuits.
3. An external thermistor relay is used. The insulation of the relay must be rated for the same voltage level as the main circuit of the drive. For connection, see *ACS800 Firmware Manual*.

Installation sites above 2000 metres (6562 feet)

WARNING! Protect against direct contact when installing, operating and servicing the RMIO board wiring and optional modules attached to the board. The Protective Extra Low Voltage (PELV) requirements stated in EN 50178 are not fulfilled at altitudes above 2000 m (6562 ft).

Routing the cables

Route the motor cable away from other cable routes. Motor cables of several drives can be run in parallel installed next to each other. It is recommended that the motor cable, input power cable and control cables be installed on separate trays. Avoid long parallel runs of motor cables with other cables in order to decrease electromagnetic interference caused by the rapid changes in the drive output voltage.

Where control cables must cross power cables make sure they are arranged at an angle as near to 90 degrees as possible. Do not run extra cables through the drive.

The cable trays must have good electrical bonding to each other and to the grounding electrodes. Aluminium tray systems can be used to improve local equalizing of potential.

A diagram of the cable routing is shown below.

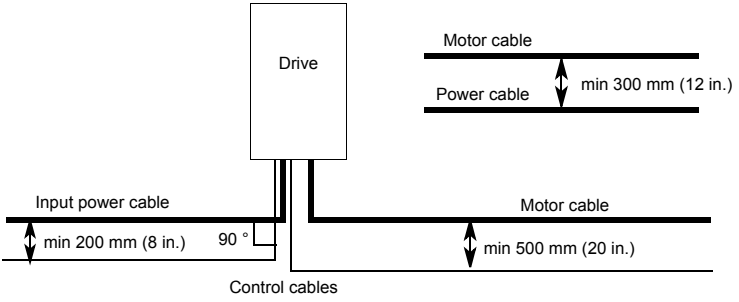

Control cable ducts

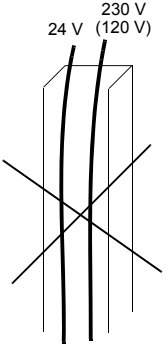

Not allowed unless the 24 V cable is insulated for 230 V (120 V) or insulated with an insulation sleeving for 230 V (120 V).

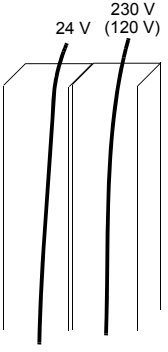

Lead 24 V and 230 V (120 V) control cables in separate ducts inside the cabinet.

Electrical installation

What this chapter contains

This chapter describes the electrical installation procedure of the drive.

WARNING! The work described in this chapter may only be carried out by a qualified electrician. Follow the *Safety instructions* on the first pages of this manual. Ignoring the safety instructions can cause injury or death.

Make sure that the drive is disconnected from the mains (input power) during installation. If the drive is already connected to the mains, wait for 5 min after disconnecting mains power.

Checking the insulation of the assembly

Drive

Every drive has been tested for insulation between the main circuit and the chassis (2500 V rms 50 Hz for 1 second) at the factory. Therefore, do not make any voltage tolerance or insulation resistance tests (e.g. hi-pot or megger) on any part of the drive.

Input cable

Check the insulation of the input cable according to local regulations before connecting it to the drive.

Motor and motor cable

Check the insulation of the motor and motor cable as follows:

1. Check that the motor cable is disconnected from the drive output terminals U2, V2 and W2.

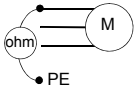

2. Measure the insulation resistances of the motor cable and the motor between each phase and the Protective Earth by using a measuring voltage of 1 kV DC. The insulation resistance must be higher than 1 Mohm.

IT (ungrounded) systems

Disconnect the EMC filter capacitors of selections +E202 and +E200 before connecting the drive to an ungrounded system. For detailed instructions on how to do this, please contact your local ABB distributor.

WARNING! If a drive with EMC filter selection +E202 or +E200 is installed on an IT system [an ungrounded power system or a high resistance-grounded (over 30 ohms) power system], the system will be connected to earth potential through the EMC filter capacitors of the drive. This may cause danger or damage the unit.

Connecting the power cables

Diagram

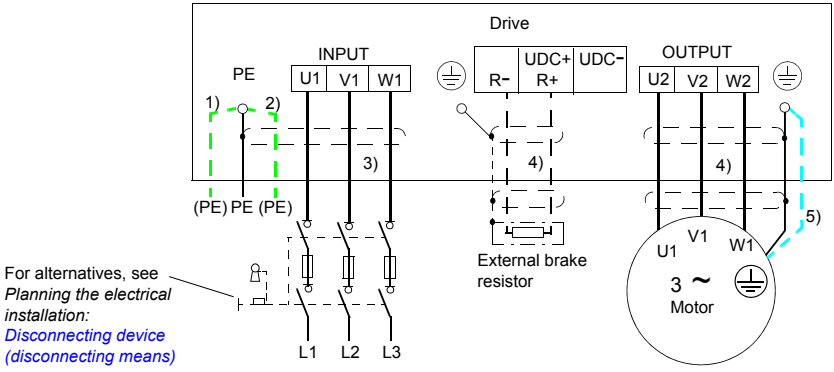

1), 2)

If shielded cable is used (not required but recommended), use a separate PE cable (1) or a cable with a grounding conductor (2) if the conductivity of the input cable shield is < 50 % of the conductivity of the phase conductor.

Ground the other end of the input cable shield or PE conductor at the distribution board.

3) 360 degrees grounding recommended if shielded cable

4) 360 degrees grounding required

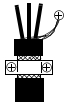

5) Use a separate grounding cable if the conductivity of the cable shield is < 50 % of the conductivity of the phase conductor and there is no symmetrically constructed grounding conductor in the cable (see *Planning the electrical installation* / *Selecting the power cables*).

Note:

If there is a symmetrically constructed grounding conductor in the motor cable in addition to the conductive shield, connect the grounding conductor to the grounding terminal at the drive and motor ends.

Do not use an asymmetrically constructed motor cable for motors > 30 kW (40 HP). Connecting its fourth conductor at the motor end increases bearing currents and causes extra wear.

Grounding of the motor cable shield at the motor end

For minimum radio frequency interference:

- ground the cable shield 360 degrees at the lead-through of the motor terminal box

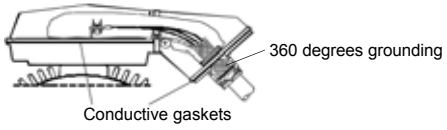

- or ground the cable by twisting the shield as follows: flattened width ≥ 1/5 · length.

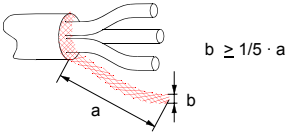

Conductor stripping lengths

Strip the conductor ends as follows to fit them inside the power cable connection terminals.

Frame size	Stripping length	
	mm	in.
R2, R3	10	0.39
R4, R5	16	0.63
R6	28	1.10

Allowed wire sizes, tightening torques

See *Technical data*: *Cable entries*.

Wall installed units (European version)

Power cable installation procedure

1. Remove the front cover (in frame size R6 the lower front cover) by releasing the retaining clip with a screw driver and lifting the cover from the bottom outwards. For IP 55 units, see *Mechanical installation / Mounting the drive on the wall*.
2. Slide the back plate of the connection box to the holes below the drive.
3. Fasten the back plate to the drive frame with two screws / three screws in frame size R6.
4. Cut adequate holes into the rubber grommets and slide the grommets onto the cables. Slide the cables through the holes of the bottom plate.
5. Strip off the plastic sheath of the cable under the 360 degrees grounding clamp. Fasten the clamp onto the stripped part of the cable.
6. Connect the twisted shield of the cable to the grounding terminal. **Note:** cable lugs are needed in frame sizes R2 and R3.
7. Connect the phase conductors of the mains cable to the U1, V1 and W1 terminals and the phase conductors of the motor cable to the U2, V2 and W2 terminals.
8. Fasten the bottom plate of the connection box with two screws to the already fastened back plate and slide the grommets into their place.
9. Secure the cables outside the unit mechanically. Connect the control cables as described in section *Connecting the control cables*. Fasten the covers (see *Fastening the control cables and covers*).

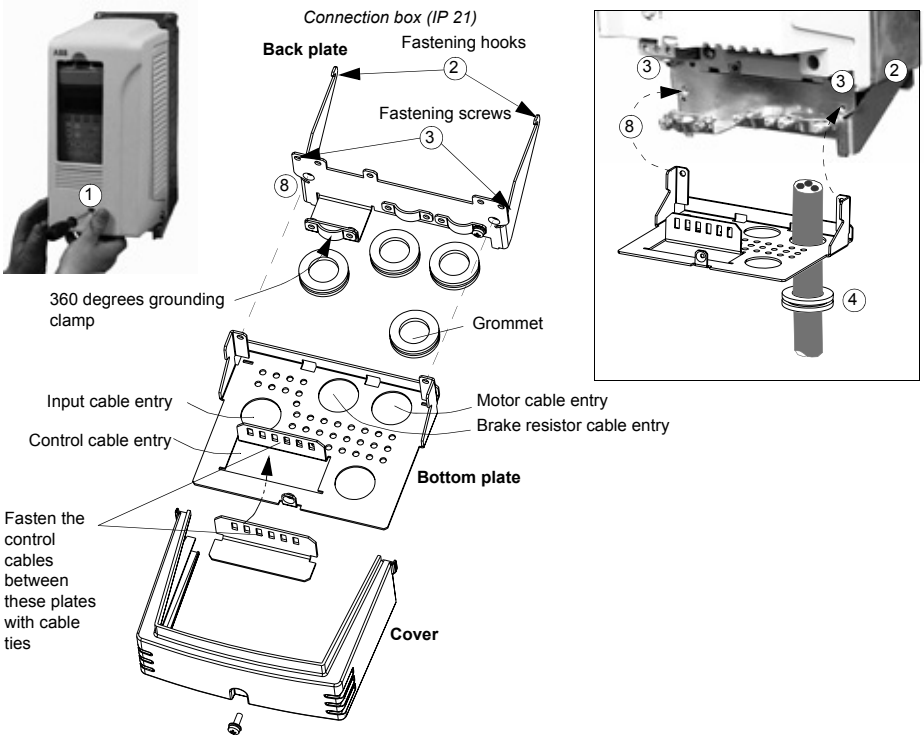

Frame sizes R2 to R4

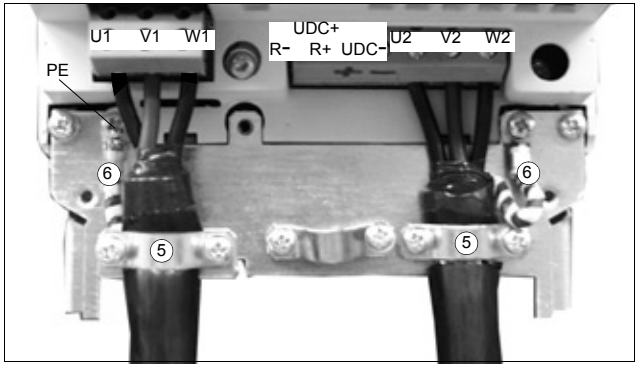

Input power cable Motor cable

Frame size R5

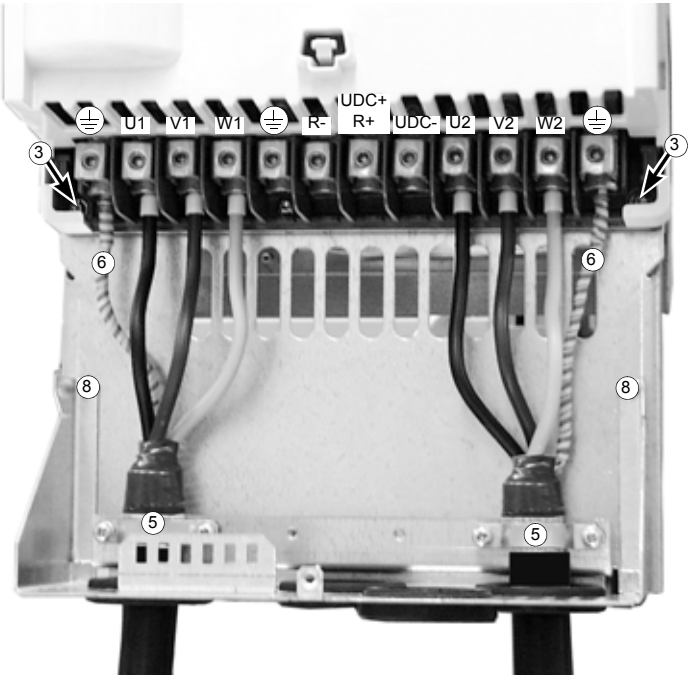

Frame size R6: Cable lug installation [16 to 70 mm^2 (6 to 2/0 AWG) cables]

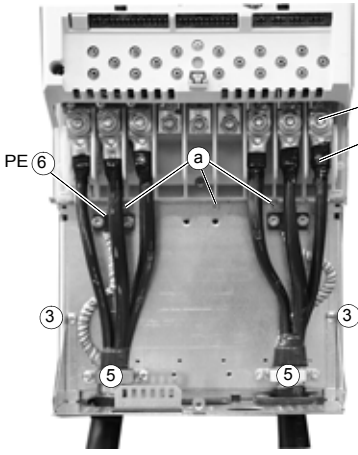

Remove the screw terminals. Fasten the cable lugs to the remaining bolts with M10 nuts.

Isolate the ends of the cable lugs with insulating tape or shrink tubing.

(a) Connection plate fastening screws

Frame size R6: Cable terminal installation [95 to 240 mm^2 (3/0 to 500 MCM)] cables

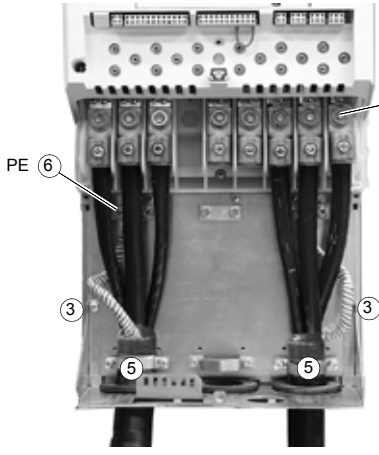

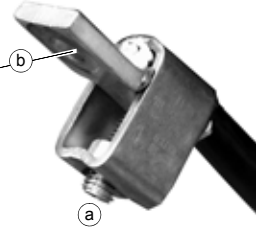

a. Connect the cable to the terminal.

b. Connect the terminal to the drive.

WARNING! If the wire size is less than 95 mm^2 (3/0 AWG), a cable lug must be used. A cable of wire size less than 95 mm^2 (3/0 AWG) connected to this terminal will loosen and may damage the drive.

Wall installed units (US version)

1. Remove the front cover (in frame size R6 the lower front cover) by releasing the retaining clip with a screw driver and lifting the cover from the bottom outwards.
2. Make the cable entry holes in the gland box by breaking off the suitable knock-out plates with a screw driver.
3. Fasten the cable glands to the opened holes of the gland box.
4. Fasten the gland box to the frame with two screws / three screws in frame size R6.

Frame sizes R2 to R4

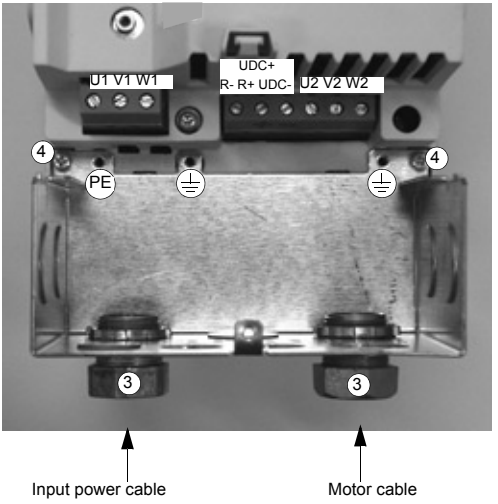

5. Lead the cables through the glands to the inside of the gland box.
6. Connect the PE conductors of the input and motor cables to the grounding terminal. **Note:** cable lugs are needed in frame sizes R2 and R3. Connect the separate PE conductor (if used) to the grounding terminal.
7. Connect the phase conductors of the input cable to the U1, V1 and W1 terminals and the phase conductors of the motor cable to the U2, V2 and W2 terminals.

   For frame size R6, see *Wall installed units (European version)* / figures for frame size R6. In case of a cable lug installation, use UL listed cable lugs and tools given below or corresponding to meet UL requirements.

Wire size	Compression lug		Crimping tool		
MCM/AWG	Manufacturer	Type	Manufacturer	Type	No. of crimps
6	Burndy	YAV6C-L2	Burndy	MY29-3	1
	Ilsco	CCL-6-38	Ilsco	ILC-10	2
4	Burndy	YA4C-L4BOX	Burndy	MY29-3	1
	Ilsco	CCL-4-38	Ilsco	MT-25	1
2	Burndy	YA2C-L4BOX	Burndy	MY29-3	2
	Ilsco	CRC-2	Ilsco	IDT-12	1
	Ilsco	CCL-2-38	Ilsco	MT-25	1
1	Burndy	YA1C-L4BOX	Burndy	MY29-3	2
	Ilsco	CRA-1-38	Ilsco	IDT-12	1
	Ilsco	CCL-1-38	Ilsco	MT-25	1
	Thomas & Betts	54148	Thomas & Betts	TBM-8	3
1/0	Burndy	YA25-L4BOX	Burndy	MY29-3	2
	Ilsco	CRB-0	Ilsco	IDT-12	1
	Ilsco	CCL-1/0-38	Ilsco	MT-25	1
	Thomas & Betts	54109	Thomas & Betts	TBM-8	3
2/0	Burndy	YAL26T38	Burndy	MY29-3	2
	Ilsco	CRA-2/0	Ilsco	IDT-12	1
	Ilsco	CCL-2/0-38	Ilsco	MT-25	1
	Thomas & Betts	54110	Thomas & Betts	TBM-8	3

8. Tighten the clamping nuts of the cable glands.

After connecting the control cables, fasten the front covers.

Warning sticker

There are warning stickers in different languages inside the packing box of the drive. Attach a warning sticker in the language of your choice onto the plastic skeleton above the power cable terminals.

Cabinet installation (IP 21, UL type 1)

The drive can be installed in a cabinet without the connection box and front cover.

It is recommended:

- to ground the cable shield 360 degrees at the cabinet entry
- to lead the cable unstripped as close to the terminals as possible.

Secure the cables mechanically.

Protect the RMIO board terminals X25 to X27 against contact when input voltage exceeds 50 V AC.

Frame size R5

Cover the power cable terminals as follows:

1. Cut holes for the installed cables into the clear plastic shroud.
2. Press the shroud onto the terminals.

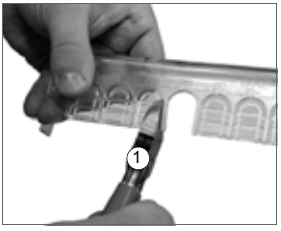

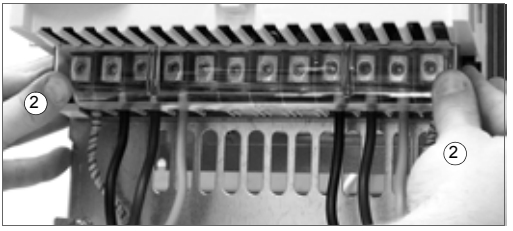

Removal of the shroud with a screw driver:

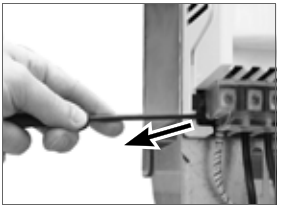

Frame size R6

Cover the power cable terminals as follows:

1. Cut holes for the installed cables into the clear plastic shroud in cable lug installations.
2. Press the shroud onto the terminals.

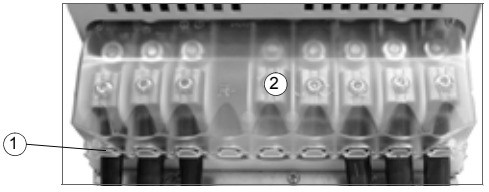

View of cable terminal installation

Removal of the shroud by lifting up with a screw driver from the corner:

Connecting the control cables

Lead the cable through the control cable entry (1).

Connect the control cables as described below. Connect the conductors to the appropriate detachable terminals of the RMIO board [refer to chapter *Motor control and I/O board (RMIO)*]. Tighten the screws to secure the connection.

Terminals

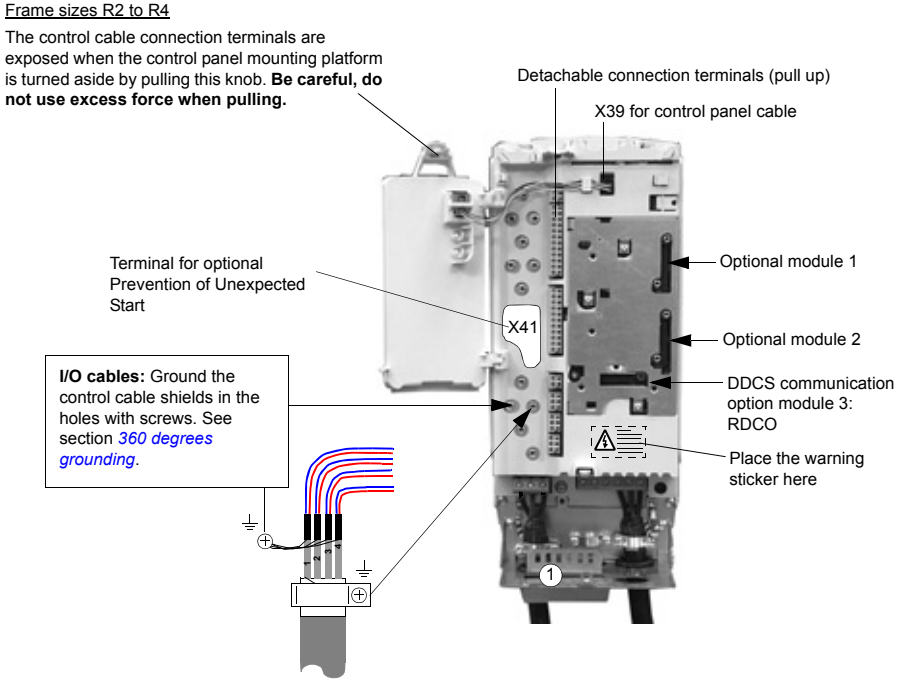

Frame sizes R5 and R6

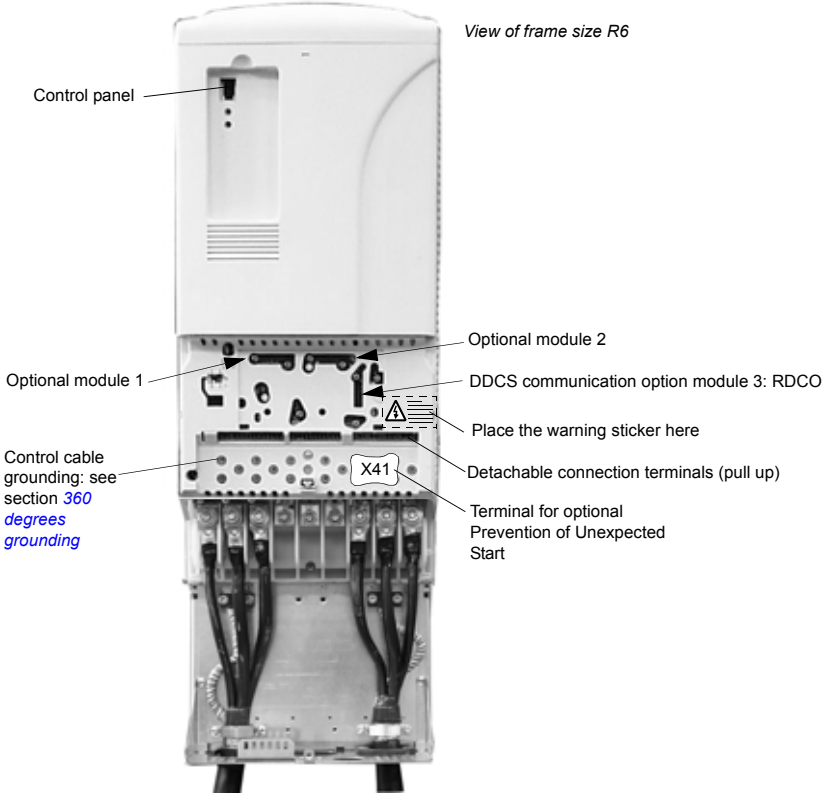

360 degrees grounding

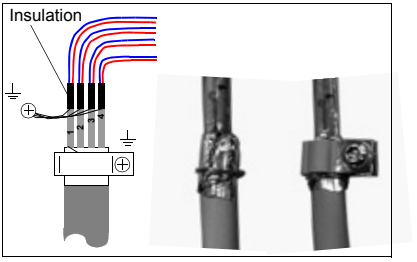

Double-shielded cable

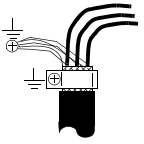

Single-shielded cable

When the outer surface of the shield is covered with non-conductive material

- Strip the cable carefully (do not cut the grounding wire and the shield)
- Turn the shield inside out to expose the conductive surface.
- Wrap the grounding wire around the conductive surface.
- Slide a conductive clamp onto the conductive part.
- Fasten the clamp to the grounding plate with a screw as close as possible to the terminals where the wires are about to be connected.

Connecting the shield wires

Single-shielded cables: Twist the grounding wires of the outer shield and connect them through the shortest possible route to the nearest grounding hole with a cable lug and a screw. Double-shielded cables: Connect each pair cable shield (twisted grounding wires) with other pair cable shields of the same cable to the nearest grounding hole with a cable lug and a screw.

Do not connect shields of different cables to the same cable lug and grounding screw.

Leave the other end of the shield unconnected or ground it indirectly via a few nanofarads high-frequency capacitor (e.g. 3.3 nF / 630 V). The shield can also be grounded directly at both ends if they are *in the same ground line* with no significant voltage drop between the end points.

Keep the signal wire pairs twisted as close to the terminals as possible. Twisting the wire with its return wire reduces disturbances caused by inductive coupling.

Cabling of I/O and fieldbus modules

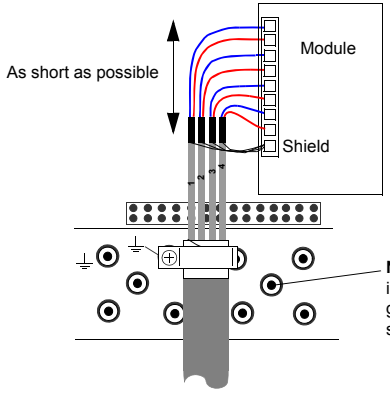

Note: The RDIO module does not include a terminal for cable shield grounding. Ground the pair cable shields here.

Pulse encoder module cabling

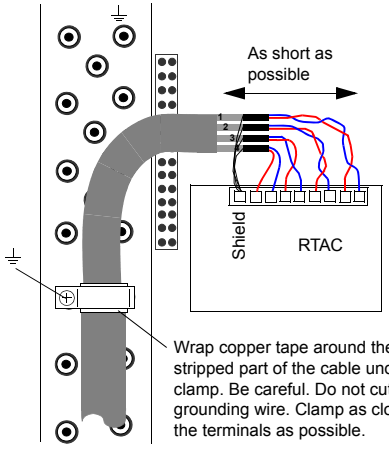

Wrap copper tape around the stripped part of the cable under the clamp. Be careful. Do not cut the grounding wire. Clamp as close to the terminals as possible.

Note1: If the encoder is of unisolated type, ground the encoder cable at the drive end only. If the encoder is galvanically isolated from the motor shaft and the stator frame, ground the encoder cable shield at the drive and the encoder end.

Note 2: Twist the pair cable wires.

Fastening the control cables and covers

When all control cables are connected, fasten them together with cable ties. Units with a connection box: fasten the cables to the entry plate with cable ties. Units with a gland box: tighten the clamping nuts of the cable glands.

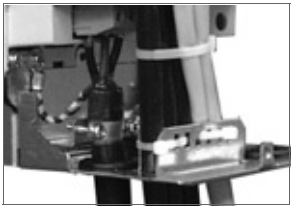

Fasten the connection box cover.

Replace the front cover.

Installation of optional modules and PC

The optional module (such as fieldbus adapter, I/O extension module and the pulse encoder interface) is inserted in the optional module slot of the RMIO board (see *Connecting the control cables*) and fixed with two screws. See the appropriate optional module manual for cable connections.

Fibre optic link

A DDCS fibre optic link is provided via the RDCO optional module for PC tools, master/follower link, NDIO, NTAC, NAIO and fieldbus adapter modules of type Nxxx. See *RDCO User's Manual* for the connections. Observe colouring codes when installing fibre optic cables. Blue connectors go to blue terminals, and grey connectors to grey terminals.

When installing multiple modules on the same channel connect them in a ring.

Installation of AGPS board (Prevention of Unexpected Start, +Q950)

What this chapter contains

This chapter describes

- electrical installation of the optional Prevention of Unexpected Start function (+Q950) of the drive.
- specifications of the board.

Prevention of Unexpected Start (+Q950)

The optional Prevention of Unexpected Start function includes an AGPS board which is connected to the drive and an external power supply. See also chapter *Prevention of Unexpected Start*, page *42*.

Installation of the AGPS board

WARNING! Dangerous voltages can be present on the AGPS board even when the 115...230 V supply is switched off. Follow the *Safety instructions* on the first pages of this manual and the instruction in this chapter when working on the AGPS board.

Make sure that the drive is disconnected from the mains (input power) and the 115...230 V source for the AGPS board is switched off during installation and maintenance. If the drive is already connected to the mains, wait for 5 min after disconnecting mains power.

See

- page *62* for location of terminal block X41 of the drive
- page *69* for the circuit diagram
- page *70* for the dimensions of the AGPS board
- page *71* for the technical data of the AGPS-11C board.

Note: Maximum cable length between AGPS terminal block X2 and the drive terminal block is restricted to 10 metres.

Connect the AGPS board as follows:

- Remove the enclosure cover by undoing the fixing screws (1).
- Ground the unit via the bottom plate of the enclosure or via terminal X1:1 of the AGPS board.
- Connect the cable delivered with the kit between terminal block X2 of the AGPS board (2) and drive terminal block X41.

WARNING! Use only the AGPS cable delivered the the kit. Using another cable or modifying the cable may cause a malfunction of the drive.

- Connect a cable between connector X1 of the AGPS board (3) and the 115...230 V source.
- Fasten the enclosure cover back with screws.

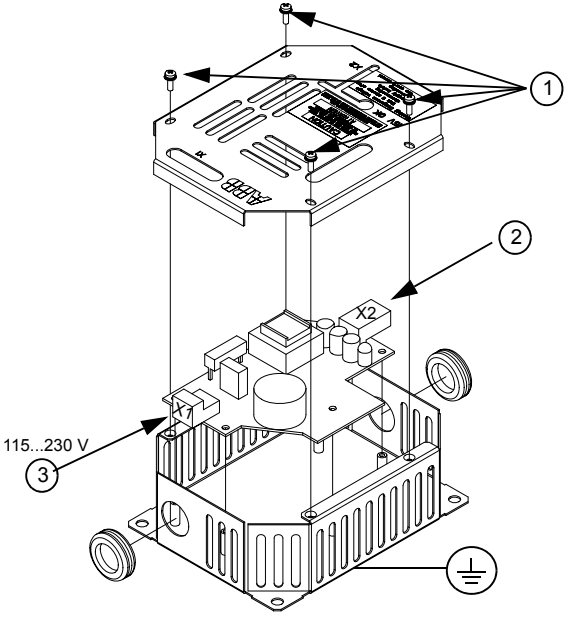

Circuit diagram

This circuit diagram shows how the AGPS-11 kit is installed.

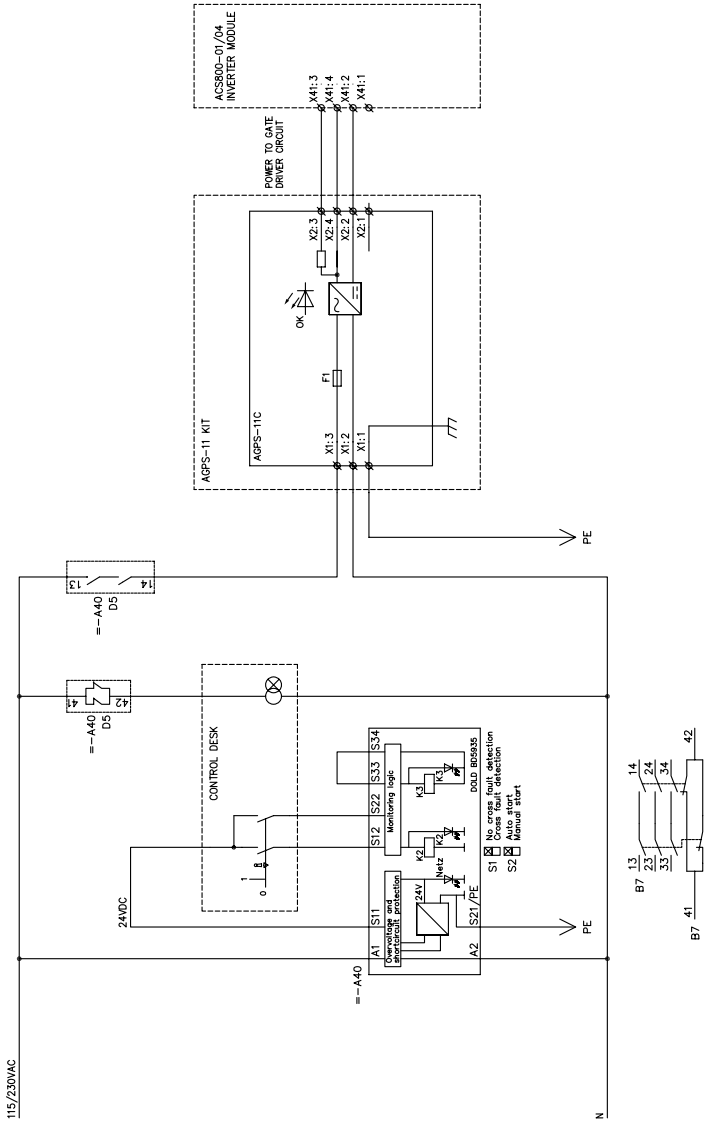

Dimensional drawing

The dimensional drawing of the AGPS board is shown below.

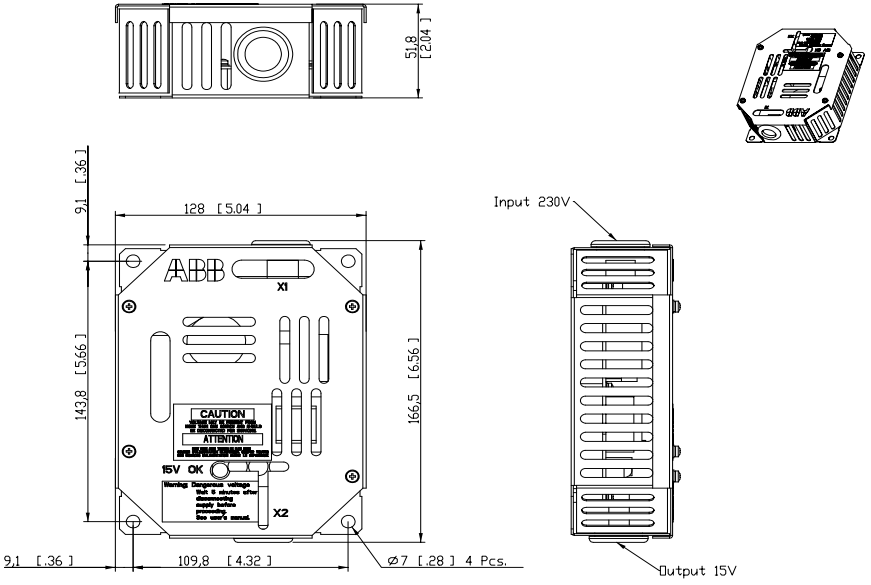

3AFE68293898

AGPS-11C board specifications

Nominal input voltage	115...230 V AC ±10%
Nominal input current	0.1 A (230 V) / 0.2 A (115 V)
Nominal frequency	50/60 Hz
Max. external fuse	16 A
X1 terminal sizes	3 x 2.5 mm^2
Output voltage	15 V DC ±0.5 V
Nominal output current	0.4 A
X2 terminal block type	JST B4P-VH
Ambient temperature	0...50°C
Relative humidity	Max. 90%, no condensation allowed
Dimensions (with enclosure)	167 x 128 x 52 mm (height x width x depth)
Weight (with enclosure)	0.75 kg
Approvals	C-UL, US listed

Motor control and I/O board (RMIO)

What this chapter contains

This chapter shows

- external control connections to the RMIO board for the ACS800 Standard Control Program (Factory Macro)
- specifications of the inputs and outputs of the board.

Note on terminal labelling

Optional modules (Rxxx) may have identical terminal designations with the RMIO board.

Note on external power supply

External +24 V power supply for the RMIO board is recommended if

- the application requires a fast start after connecting the input power supply
- fieldbus communication is required when the input power supply is disconnected.

The RMIO board can be supplied from an external power source via terminal X23 or X34 or via both X23 and X34. The internal power supply to terminal X34 can be left connected when using terminal X23.

WARNING! If the RMIO board is supplied from an external power source via terminal X34, the loose end of the cable removed from the RMIO board terminal must be secured mechanically to a location where it cannot come into contact with electrical parts. If the screw terminal plug of the cable is removed, the wire ends must be individually insulated.

Parameter settings

In Standard Control Program, set parameter 16.9 CTRL BOARD SUPPLY to EXTERNAL 24V if the RMIO board is powered from an external supply.

External control connections (non-US)

External control cable connections to the RMIO board for the ACS800 Standard Control Program (Factory Macro) are shown below. For external control connections of other control macros and programs, see the appropriate *Firmware Manual*.

RMIO

Terminal block size:

cables 0.3 to 3.3 mm^2 (22 to 12 AWG)

Tightening torque:

0.2 to 0.4 Nm

(0.2 to 0.3 lbf ft)

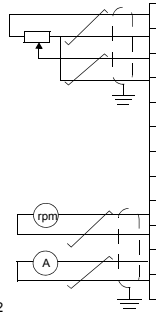

X2*	RMIO		
X20	X20		
1	1	VREF-	Reference voltage -10 V DC, 1 kohm ≤ R_L ≤ 10 kohm
2	2	AGND	
X21	X21		
1	1	VREF+	Reference voltage 10 V DC, 1 kohm ≤ R_L ≤ 10 kohm
2	2	AGND	
3	3	AI1+	Speed reference 0(2) ... 10 V, R_{in} = 200 kohm
4	4	AI1-	
5	5	AI2+	By default, not in use. 0(4) ... 20 mA, R_{in} = 100 ohm
6	6	AI2-	
7	7	AI3+	By default, not in use. 0(4) ... 20 mA, R_{in} = 100 ohm
8	8	AI3-	
9	9	AO1+	Motor speed 0(4)...20 mA ≙ 0...motor nom. speed, R_L ≤ 700 ohm
10	10	AO1-	
11	11	AO2+	Output current 0(4)...20 mA ≙ 0...motor nom. current, R_L ≤ 700 ohm
12	12	AO2-	
X22	X22		
1	1	DI1	Stop/Start
2	2	DI2	Forward/Reverse [1]
3	3	DI3	Not in use
4	4	DI4	Acceleration & deceleration select [2]
5	5	DI5	Constant speed select [3]
6	6	DI6	Constant speed select [3]
7	7	+24VD	+24 V DC max. 100 mA
8	8	+24VD	
9	9	DGND1	Digital ground
10	10	DGND2	Digital ground
11	11	DIIL	Start interlock (0 = stop) [4]
X23	X23		
1	1	+24V	Auxiliary voltage output and input, non-isolated, 24 V DC 250 mA [5]
2	2	GND	
X25	X25		
1	1	RO1	Relay output 1: ready
2	2	RO1	
3	3	RO1	
X26	X26		
1	1	RO2	Relay output 2: running
2	2	RO2	
3	3	RO2	
X27	X27		
1	1	RO3	Relay output 3: fault (-1)
2	2	RO3	
3	3	RO3	

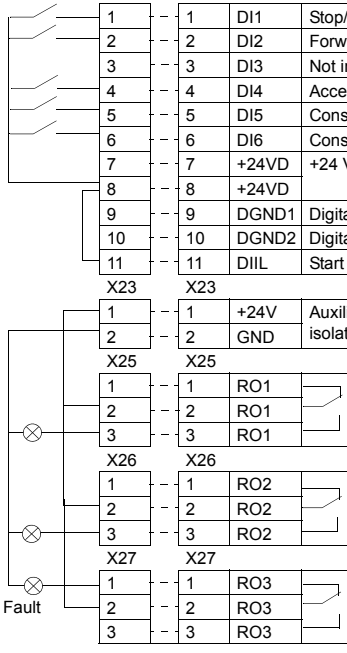

* optional terminal block in ACS800-02 and ACS800-07

[1] Only effective if par. 10.03 is set to REQUEST by the user.

[2] 0 = open, 1 = closed

DI4	Ramp times according to
0	parameters 22.02 and 22.03
1	parameters 22.04 and 22.05

[3] See par. group 12 CONSTANT SPEEDS.

DI5	DI6	Operation
0	0	Set speed through AI1
1	0	Constant speed 1
0	1	Constant speed 2
1	1	Constant speed 3

[4] See parameter 21.09 START INTRL FUNC.

[5] Total maximum current shared between this output and optional modules installed on the board.

External control connections (US)

External control cable connections to the RMIO board for the ACS800 Standard Control Program (Factory Macro US version) are shown below. For external control connections of other control macros and programs, see the appropriate *Firmware Manual*.

RMIO

Terminal block size:

cables 0.3 to 3.3 mm^2 (22 to 12 AWG)

Tightening torque:

0.2 to 0.4 Nm (0.2 to 0.3 lbf ft)

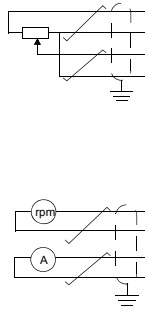

X2*	RMIO		
X20	X20		
1	1	VREF-	Reference voltage -10 V DC, 1 kohm ≤ R_L ≤ 10 kohm
2	2	AGND	
X21	X21		
1	1	VREF+	Reference voltage 10 V DC, 1 kohm ≤ R_L ≤ 10 kohm
2	2	AGND	
3	3	AI1+	Speed reference 0(2) ... 10 V, R_{in} = 200 kohm
4	4	AI1-	
5	5	AI2+	By default, not in use. 0(4) ... 20 mA, R_{in} = 100 ohm
6	6	AI2-	
7	7	AI3+	By default, not in use. 0(4) ... 20 mA, R_{in} = 100 ohm
8	8	AI3-	
9	9	AO1+	Motor speed 0(4)...20 mA ≙ 0...motor nom. speed, R_L ≤ 700 ohm
10	10	AO1-	
11	11	AO2+	Output current 0(4)...20 mA ≙ 0...motor nom. current, R_L ≤ 700 ohm
12	12	AO2-	
X22	X22		
1	1	DI1	Start (⊥⌐)
2	2	DI2	Stop (¬⊥)
3	3	DI3	Forward/Reverse [1]
4	4	DI4	Acceleration & deceleration select [2]
5	5	DI5	Constant speed select [3]
6	6	DI6	Constant speed select [3]
7	7	+24VD	+24 V DC max. 100 mA
8	8	+24VD	
9	9	DGND1	Digital ground
10	10	DGND2	Digital ground
11	11	DIIL	Start interlock (0 = stop) [4]
X23	X23		
1	1	+24V	Auxiliary voltage output and input, non-isolated, 24 V DC 250 mA [5]
2	2	GND	
X25	X25		
1	1	RO1	Relay output 1: ready
2	2	RO1	
3	3	RO1	
X26	X26		
1	1	RO2	Relay output 2: running
2	2	RO2	
3	3	RO2	
X27	X27		
1	1	RO3	Relay output 3: fault (-1)
2	2	RO3	
3	3	RO3	

Fault

* optional terminal block in ACS800-U2 and ACS800-U7

[1] Only effective if par. 10.03 is set to REQUEST by the user.

[2] 0 = open, 1 = closed

DI4	Ramp times according to
0	parameters 22.02 and 22.03
1	parameters 22.04 and 22.05

[3] See par. group 12 CONSTANT SPEEDS.

DI5	DI6	Operation
0	0	Set speed through AI1
1	0	Constant speed 1
0	1	Constant speed 2
1	1	Constant speed 3

[4] See parameter 21.09 START INTRL FUNC.

[5] Total maximum current shared between this output and optional modules installed on the board.

RMIO board specifications

Analogue inputs

	With Standard Control Program two programmable differential current inputs (0 mA / 4 mA ... 20 mA, R_{in} = 100 ohm) and one programmable differential voltage input (-10 V / 0 V / 2 V ... +10 V, R_{in} = 200 kohm). The analogue inputs are galvanically isolated as a group.
Insulation test voltage	500 V AC, 1 min
Max. common mode voltage between the channels	±15 V DC
Common mode rejection ratio	≥ 60 dB at 50 Hz
Resolution	0.025% (12 bit) for the -10 V ... +10 V input. 0.5% (11 bit) for the 0 ... +10 V and 0 ... 20 mA inputs.
Inaccuracy	±0.5% (Full Scale Range) at 25 °C (77 °F). Temperature coefficient: ±100 ppm/°C (±56 ppm/°F), max.

Constant voltage output

Voltage	+10 V DC, 0, -10 V DC ± 0.5% (Full Scale Range) at 25 °C (77 °F). Temperature coefficient: ±100 ppm/°C (±56 ppm/°F) max.
Maximum load	10 mA
Applicable potentiometer	1 kohm to 10 kohm

Auxiliary power output

Voltage	24 V DC ± 10%, short circuit proof
Maximum current	250 mA (shared between this output and optional modules installed on the RMIO)

Analogue outputs

	Two programmable current outputs: 0 (4) to 20 mA, R_L ≤ 700 ohm
Resolution	0.1% (10 bit)
Inaccuracy	±1% (Full Scale Range) at 25 °C (77 °F). Temperature coefficient: ±200 ppm/°C (±111 ppm/°F) max.

Digital inputs

	With Standard Control Program six programmable digital inputs (common ground: 24 V DC, -15% to +20%) and a start interlock input. Group isolated, can be divided in two isolated groups (see *Isolation and grounding diagram* below). Thermistor input: 5 mA, < 1.5 kohm ≙ “1” (normal temperature), > 4 kohm ≙ “0” (high temperature), open circuit ≙ “0” (high temperature). Internal supply for digital inputs (+24 V DC): short-circuit proof. An external 24 V DC supply can be used instead of the internal supply.
Insulation test voltage	500 V AC, 1 min
Logical thresholds	< 8 V DC ≙ “0”, > 12 V DC ≙ “1”
Input current	DI1 to DI 5: 10 mA, DI6: 5 mA
Filtering time constant	1 ms

Relay outputs

	Three programmable relay outputs
Switching capacity	8 A at 24 V DC or 250 V AC, 0.4 A at 120 V DC
Minimum continuous current	5 mA rms at 24 V DC
Maximum continuous current	2 A rms
Insulation test voltage	4 kV AC, 1 minute

DDCS fibre optic link

	With optional communication adapter module RDCO. Protocol: DDCS (ABB Distributed Drives Communication System)

24 V DC power input

Voltage	24 V DC ± 10%
Typical current consumption (without optional modules)	250 mA
Maximum current consumption	1200 mA (with optional modules inserted)

The terminals on the RMIO board as well as on the optional modules attachable to the board fulfil the Protective Extra Low Voltage (PELV) requirements stated in EN 50178 provided that the external circuits connected to the terminals also fulfil the requirements and the installation site is below 2000 m (6562 ft). Above 2000 m (6562 ft), see page *49.*

Isolation and grounding diagram

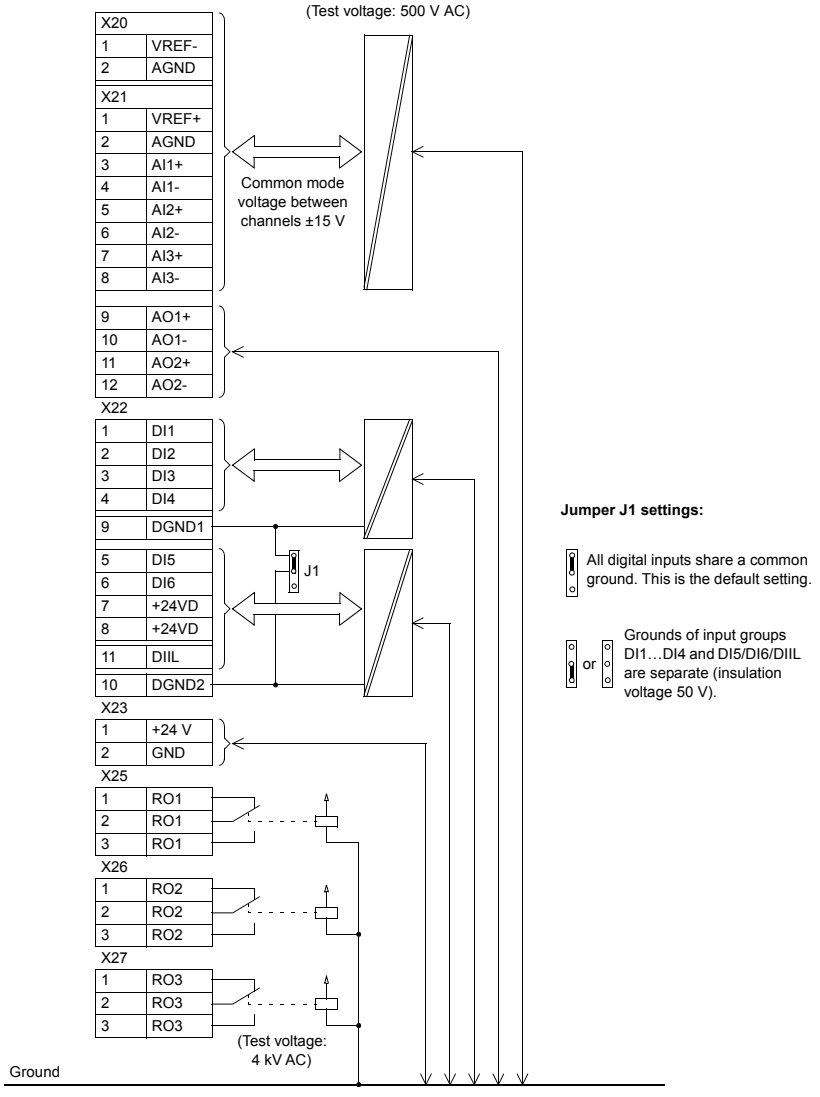

Installation checklist

Checklist

Check the mechanical and electrical installation of the drive before start-up. Go through the checklist below together with another person. Read the *Safety instructions* on the first pages of this manual before you work on the unit.

	Check
MECHANICAL INSTALLATION	
☐	The ambient operating conditions are allowed. (See *Mechanical installation, Technical data: IEC data* or *NEMA data, Ambient conditions*.)
☐	The unit is fixed properly on a vertical non-flammable wall. (See *Mechanical installation.*)
☐	The cooling air will flow freely.
☐	The motor and the driven equipment are ready for start. (See *Planning the electrical installation: Motor selection and compatibility, Technical data: Motor connection*.)
ELECTRICAL INSTALLATION (See *Planning the electrical installation, Electrical installation.*)	
☐	The +E202 and +E200 EMC filter capacitors are disconnected if the drive is connected to an IT (ungrounded) system.
☐	The capacitors are reformed if stored over one year (refer to *ACS 600/800 Capacitor Reforming Guide* [64059629 (English)].
☐	The drive is grounded properly.
☐	The mains (input power) voltage matches the drive nominal input voltage.
☐	The mains (input power) connections at U1, V1 and W1 and their tightening torques are OK.
☐	Appropriate mains (input power) fuses and disconnector are installed.
☐	The motor connections at U2, V2 and W2 and their tightening torques are OK.
☐	The motor cable is routed away from other cables.
☐	There are no power factor compensation capacitors in the motor cable.
☐	The external control connections inside the drive are OK.
☐	There are no tools, foreign objects or dust from drilling inside the drive.
☐	Mains (input power) voltage cannot be applied to the output of the drive (with bypass connection).
☐	Drive, motor connection box and other covers are in place.

Maintenance

What this chapter contains

This chapter contains preventive maintenance instructions.

Safety

WARNING! Read the *Safety instructions* on the first pages of this manual before performing any maintenance on the equipment. Ignoring the safety instructions can cause injury or death.

Maintenance intervals

If installed in an appropriate environment, the drive requires very little maintenance. This table lists the routine maintenance intervals recommended by ABB.

Maintenance	Interval	Instruction
Capacitor reforming	Every year when stored	See *Reforming*.
Heatsink temperature check and cleaning	Depends on the dustiness of the environment (every 6 to 12 months)	See *Heatsink*.
Cooling fan change	Every six years	See *Fan*.
Change of additional cooling fan in IP 55 units and in IP 21 units when included	Every three years	See *Additional fan.*
Frame size R4 and up: capacitor change	Every ten years	See *Capacitors*.

Heatsink

The heatsink fins pick up dust from the cooling air. The drive runs into overtemperature warnings and faults if the heatsink is not clean. In a “normal” environment (not dusty, not clean) the heatsink should be checked annually, in a dusty environment more often.

Clean the heatsink as follows (when necessary):

1. Remove the cooling fan (see section *Fan*).
2. Blow clean compressed air (not humid) from bottom to top and simultaneously use a vacuum cleaner at the air outlet to trap the dust. **Note:** If there is a risk of the dust entering adjoining equipment, perform the cleaning in another room.
3. Refit the cooling fan.

Fan

The cooling fan lifespan of the drive is about 50 000 operating hours. The actual lifespan depends on the drive usage and ambient temperature. See the appropriate ACS800 firmware manual for an actual signal which indicates the hours of usage of the fan. For resetting the running time signal after a fan replacement, please contact ABB.

Fan failure can be predicted by the increasing noise from fan bearings and the gradual rise in the heatsink temperature in spite of heatsink cleaning. If the drive is operated in a critical part of a process, fan replacement is recommended once these symptoms start appearing. Replacement fans are available from ABB. Do not use other than ABB specified spare parts.

Fan replacement (R2, R3)

To remove the fan, release the retaining clips. Disconnect the cable. Install the new fan in reverse order.

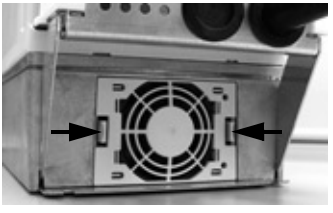

Bottom view

Fan replacement (R4)

1. Loosen the screws that fasten the fan mounting plate to the frame.
2. Push the fan mounting plate to the left and pull it out.
3. Disconnect the fan power cable.
4. Undo the screws that fasten the fan to the fan mounting plate.
5. Install the new fan in reverse order.

Bottom view

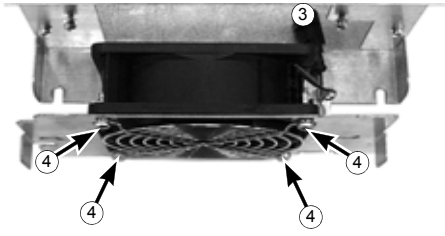

View from above fan plate pulled out

Fan replacement (R5)

1. Undo the fastening screws of the swing-out frame.
2. Open the swing-out frame.
3. Disconnect the cable.
4. Undo the fastening screws of the fan.
5. Install the new fan in reverse order.

Bottom view

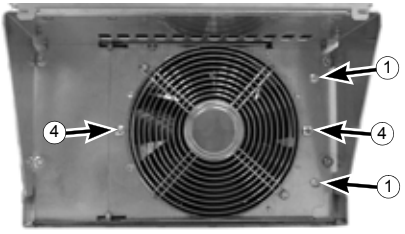

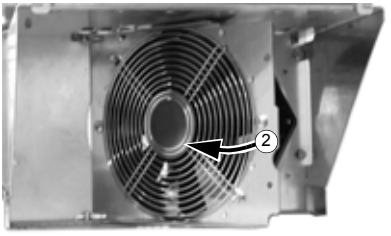

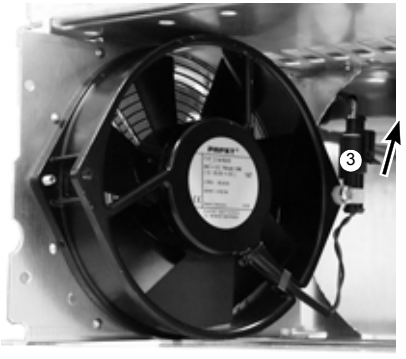

Fan replacement (R6)

To remove the fan, undo the fixing screws. Disconnect the cable. Install the new fan in reverse order.

Note: In -0205-3 and 0255-5 units, access the fan through the opening in the support frame when changing the fan.

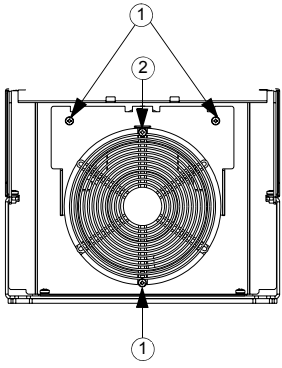

Bottom view

Additional fan

There is an additional cooling fan in all IP 55 units and most IP 21 units. However, there is no additional fan in the following IP 21 units: -0003-3, -0004-3, -0004-5, -0005-5 and -0006-5. The following IP 55 units have two additional fans: -0205-3 and -0255-5.

Replacement (R2, R3)

Remove the front cover. To remove the fan, release the retaining clip (1). Disconnect the cable (2, detachable terminal). Install the new fan in reverse order.

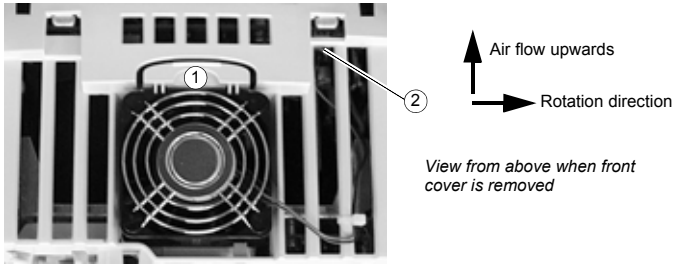

View from above when front cover is removed

Replacement (R4, R5)

Remove the front cover. The fan is located on the lower right-hand side of the unit (R4) or on the right-hand side of the control panel (R5). Lift the fan out and disconnect the cable. Install the fan in reverse order.

Replacement (R6)

Remove the top cover by lifting it by the rear edge. To remove the fan, release the retaining clips by pulling the back edge (1) of the fan upwards. Disconnect the cable (2, detachable terminal). Install the new fan in reverse order.

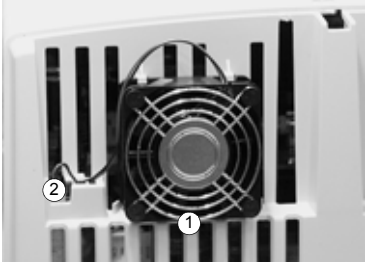

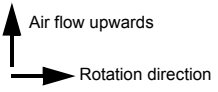

View from above when top cover is removed

Capacitors

The drive intermediate circuit employs several electrolytic capacitors. Their lifespan is from 45 000 to 90 000 hours depending on drive loading and ambient temperature. Capacitor life can be prolonged by lowering the ambient temperature.

It is not possible to predict a capacitor failure. Capacitor failure is usually followed by a mains fuse failure or a fault trip. Contact ABB if capacitor failure is suspected. Replacements for frame size R4 and up are available from ABB. Do not use other than ABB specified spare parts.

Reforming

Reform (re-age) spare part capacitors once a year according to *ACS 600/800 Capacitor Reforming Guide* (code: 64059629).

LEDs

This table describes LEDs of the drive.

Where	LED	When the LED is lit
RMIO board *	Red	Drive in fault state
	Green	The power supply on the board is OK.
Control panel mounting platform (with type code selection +0J400 only)	Red	Drive in fault state
	Green	The main +24 V power supply for the control panel and the RMIO board is OK.

* The LEDs are not visible in frame sizes R2 to R6.

Technical data

What this chapter contains

This chapter contains the technical specifications of the drive, e.g. the ratings, sizes and technical requirements, provisions for fulfilling the requirements for CE and other markings and warranty policy.

IEC data

Ratings

The IEC ratings for the ACS800-01 with 50 Hz and 60 Hz supplies are given below. The symbols are described below the table.

ACS800-01 size	Nominal ratings		No-overload use	Light-overload use		Heavy-duty use		Frame size	Air flow	Heat dissipation
	$I_{cont.max}$ A	I_{max} A	$P_{cont.max}$ kW	I_{2N} A	P_N kW	I_{2hd} A	P_{hd} kW		m^3/h	W
Three-phase supply voltage 208 V, 220 V, **230 V** or 240 V										
-0001-2	5.1	6.5	1.1	4.7	0.75	3.4	0.55	R2	35	100
-0002-2	6.5	8.2	1.5	6.0	1.1	4.3	0.75	R2	35	100
-0003-2	8.5	10.8	1.5	7.7	1.5	5.7	1.1	R2	35	100
-0004-2	10.9	13.8	2.2	10.2	2.2	7.5	1.5	R2	35	120
-0005-2	13.9	17.6	3	12.7	3	9.3	2.2	R2	35	140
-0006-2	19	24	4	18	4	14	3	R3	69	160
-0009-2	25	32	5.5	24	5,5	19	4	R3	69	200
-0011-2	34	46	7.5	31	7.5	23	5.5	R3	69	250
-0016-2	44	62	11	42	11	32	7.5	R4	103	340
-0020-2	55	72	15	50	11	37	7.5	R4	103	440
-0025-2	72	86	18.5	69	18.5	49	11	R5	250	530
-0030-2	86	112	22	80	22	60	15	R5	250	610
-0040-2	103	138	30	94	22	69	18.5	R5	250	810
-0050-2	141	164	37	132	37	97	30	R6	405	1190
-0060-2	166	202	45	155	45	115	30	R6	405	1190
-0070-2	202	282	55	184	55	141	37	R6	405	1440

ACS800-01 size	Nominal ratings		No-overload use	Light-overload use		Heavy-duty use		Frame size	Air flow	Heat dissipation
	$I_{cont.max}$ A	I_{max} A	$P_{cont.max}$ kW	I_{2N} A	P_N kW	I_{2hd} A	P_{hd} kW		m^3/h	W
Three-phase supply voltage 380 V, **400 V** or 415 V										
-0003-3	5.1	6.5	1.5	4.7	1.5	3.4	1.1	R2	35	100
-0004-3	6.5	8.2	2.2	5.9	2.2	4.3	1.5	R2	35	120
-0005-3	8.5	10.8	3	7.7	3	5.7	2.2	R2	35	140
-0006-3	10.9	13.8	4	10.2	4	7.5	3	R2	35	160
-0009-3	13.9	17.6	5.5	12.7	5.5	9.3	4	R2	35	200
-0011-3	19	24	7.5	18	7.5	14	5.5	R3	69	250
-0016-3	25	32	11	24	11	19	7.5	R3	69	340
-0020-3	34	46	15	31	15	23	11	R3	69	440
-0025-3	44	62	22	41	18.5	32	15	R4	103	530
-0030-3	55	72	30	50	22	37	18.5	R4	103	610
-0040-3	72	86	37	69	30	49	22	R5	250	810
-0050-3	86	112	45	80	37	60	30	R5	250	990
-0060-3	103	138	55	94	45	69	37	R5	250	1190
-0075-3	145	170	75	141	75	100	45	R5	405	1440
-0070-3	141	164	75	132	55	97	45	R6	405	1440
-0100-3	166	202	90	155	75	115	55	R6	405	1940
-0120-3	202	282	110	184	90	141	75	R6	405	2310
-0135-3	225	326	110	220	110	163	90	R6	405	2810
-0165-3	260	326	132	254	132	215	110	R6	405	3260
-0205-3	290	351	160	285	160	234	132	R6	405	4200
Three-phase supply voltage 380 V, 400 V, 415 V, 440 V, 460 V, 480 V or **500** V										
-0004-5	4.9	6.5	2.2	4.5	2.2	3.4	1.5	R2	35	120
-0005-5	6.2	8.2	3	5.6	3	4.2	2.2	R2	35	140
-0006-5	8.1	10.8	4	7.7	4	5.6	3	R2	35	160
-0009-5	10.5	13.8	5.5	10	5.5	7.5	4	R2	35	200
-0011-5	13.2	17.6	7.5	12	7.5	9.2	5.5	R2	35	250
-0016-5	19	24	11	18	11	13	7.5	R3	69	340
-0020-5	25	32	15	23	15	18	11	R3	69	440
-0025-5	34	46	18.5	31	18.5	23	15	R3	69	530
-0030-5	42	62	22	39	22	32	18.5	R4	103	610
-0040-5	48	72	30	44	30	36	22	R4	103	810
-0050-5	65	86	37	61	37	50	30	R5	250	990
-0060-5	79	112	45	75	45	60	37	R5	250	1190
-0070-5	96	138	55	88	55	69	45	R5	250	1440
-0105-5	145	170	90	141	90	100	55	R5	405	2150
-0100-5	124	164	75	115	75	88	55	R6	405	1940
-0120-5	157	202	90	145	90	113	75	R6	405	2310
-0140-5	180	282	110	163	110	141	90	R6	405	2810
-0165-5	225	326	132	220	132	163	110	R6	405	3260
-0205-5	260	326	160	254	160	215	132	R6	405	3800
-0255-5	290	351	200	285	200	234	160	R6	405	4500

ACS800-01 size	Nominal ratings		No-overload use	Light-overload use		Heavy-duty use		Frame size	Air flow	Heat dissipation
	$I_{cont.max}$ A	I_{max} A	$P_{cont.max}$ kW	I_{2N} A	P_N kW	I_{2hd} A	P_{hd} kW		m^3/h	W
Three-phase supply voltage 525 V, 550 V, 575 V, 600 V, 660 V or **690** V										
-0011-7	13	14	11	11.5	7.5	8.5	5.5	R4	103	300
-0016-7	17	19	15	15	11	11	7.5	R4	103	340
-0020-7	22	28	18.5	20	15	15	11	R4	103	440
-0025-7	25	38	22	23	18.5	19	15	R4	103	530
-0030-7	33	44	30	30	22	22	18.5	R4	103	610
-0040-7	36	54	30	34	30	27	22	R4	103	690
-0050-7	51	68	45	46	37	34	30	R5	250	840
-0060-7	57	84	55	52	45	42	37	R5	250	1010
-0070-7	79	104	75	73	55	54	45	R6	405	1220
-0100-7	93	124	90	86	75	62	55	R6	405	1650
-0120-7	113	172	110	108	90	86	75	R6	405	1960
-0145-7	134	190	132	125	110	95	90	R6	405	2660
-0175-7	166	245	160	155	132	131	110	R6	405	3470
-0205-7	190	245	160	180	160	147	132	R6	405	4180

PDM code: 00096931-J

Symbols

Nominal ratings

$I_{cont.max}$ continuous rms output current. No overload capability at 40 °C.

I_{max} maximum output current. Available for 10 s at start, otherwise as long as allowed by drive temperature.

Typical ratings:

No-overload use

$P_{cont.max}$ typical motor power. The power ratings apply to most IEC 34 motors at the nominal voltage, 230 V, 400 V, 500 V or 690 V.

Light-overload use (10% overload capability)

I_{2N} continuous rms current. 10% overload is allowed for one minute every 5 minutes.

P_N typical motor power. The power ratings apply to most IEC 34 motors at the nominal voltage, 230 V, 400 V, 500 V or 690 V.

Heavy-duty use (50 % overload capability)

I_{2hd} continuous rms current. 50% overload is allowed for one minute every 5 minutes.

P_{hd} typical motor power. The power ratings apply to most IEC 34 motors at the nominal voltage, 230 V, 400 V, 500 V or 690 V.

Sizing

The current ratings are the same regardless of the supply voltage within one voltage range. To achieve the rated motor power given in the table, the rated current of the drive must be higher than or equal to the rated motor current.

Note 1: The maximum allowed motor shaft power is limited to $1.5 \cdot P_{hd}$, $1.1 \cdot P_N$ or $P_{cont.max}$ (whichever value is greatest). If the limit is exceeded, motor torque and current are automatically restricted. The function protects the input bridge of the drive against overload. If the condition exists for 5 minutes, the limit is set to $P_{cont.max}$.

Note 2: The ratings apply at an ambient temperature of 40 °C (104 °F). At lower temperatures the ratings are higher (except I_{max}).

Note 3: Use the DriveSize PC tool for a more accurate dimensioning if the ambient temperature is below 40 °C (104 °F) or the drive is loaded cyclically.

Derating

The load capacity (current and power) decreases if the installation site altitude exceeds 1000 metres (3300 ft), or if the ambient temperature exceeds 40 °C (104 °F).

Temperature derating

In the temperature range +40 °C (+104 °F) to +50 °C (+122 °F) the rated output current is decreased 1% for every additional 1 °C (1.8 °F). The output current is calculated by multiplying the current given in the rating table by the derating factor.

Example If the ambient temperature is 50 °C (+122 °F), the derating factor is 100% - 1 $\frac{\%}{°C}$ · 10 °C = 90% or 0.90. The output current is then 0.90 · I_{2N} or 0.90 · I_{2hd}.

Altitude derating

In altitudes from 1000 to 4000 m (3300 to 13123 ft) above sea level, the derating is 1% for every 100 m (328 ft). For a more accurate derating, use the *Drive*Size PC tool. See *Installation sites above 2000 metres (6562 feet)* on page *49*.

Fuses

gG and aR fuses for protection against short-circuit in the input power cable or drive are listed below. Either fuse type may be used if it operates rapidly enough.

Frame sizes R2 to R4

Check from the fuse time-current curve that the operating time of the fuse is below 0.5 seconds. The operating time depends on the supply network impedance and the cross-sectional area and length of the supply cable. The short-circuit current can be calculated as shown below in section *Frame sizes R5 and R6*.

Note 1: See also *Planning the electrical installation*: *Thermal overload and short-circuit protection*. For UL recognized fuses, see *NEMA data* on page *102*.

Note 2: In multicable installations, install only one fuse per phase (not one fuse per conductor).

Note 3: Larger fuses than the recommended ones must not be used.

Note 4: Fuses from other manufacturers can be used if they meet the ratings and the melting curve of the fuse does not exceed the melting curve of the fuse mentioned in the table.

ACS800-01 size	**Input current**	**Fuse**					
		A	A^2s	V	Manufacturer	Type	IEC size
Three-phase supply voltage 208 V, 220 V, **230 V** or 240 V							
-0001-2	4.4	10	483	500	ABB Control	OFAF000H10	000
-0002-2	5.2	10	483	500	ABB Control	OFAF000H10	000
-0003-2	6.7	10	483	500	ABB Control	OFAF000H10	000
-0004-2	9.3	16	993	500	ABB Control	OFAF000H16	000
-0005-2	12	16	993	500	ABB Control	OFAF000H16	000
-0006-2	16	20	1620	500	ABB Control	OFAF000H20	000
-0009-2	23	25	3100	500	ABB Control	OFAF000H25	000
-0011-2	31	40	9140	500	ABB Control	OFAF000H40	000
-0016-2	40	50	15400	500	ABB Control	OFAF000H50	000
-0020-2	51	63	21300	500	ABB Control	OFAF000H63	000

ACS800-01 size	Input current	Fuse					
		A	A^2s	V	Manufacturer	Type	IEC size
Three-phase supply voltage 380 V, **400 V** or 415 V							
-0003-3	4.7	10	483	500	ABB Control	OFAF000H10	000
-0004-3	6.0	10	483	500	ABB Control	OFAF000H10	000
-0005-3	7.9	10	483	500	ABB Control	OFAF000H10	000
-0006-3	10	16	993	500	ABB Control	OFAF000H16	000
-0009-3	13	16	993	500	ABB Control	OFAF000H16	000
-0011-3	17	20	1620	500	ABB Control	OFAF000H20	000
-0016-3	23	25	3100	500	ABB Control	OFAF000H25	000
-0020-3	32	40	9140	500	ABB Control	OFAF000H40	000
-0025-3	42	50	15400	500	ABB Control	OFAF000H50	000
-0030-3	53	63	21300	500	ABB Control	OFAF000H63	000
Three-phase supply voltage 380 V, 400 V, 415 V, 440 V, 460 V, 480 V or **500** V							
-0004-5	4.7	10	483	500	ABB Control	OFAF000H10	000
-0005-5	5.9	10	483	500	ABB Control	OFAF000H10	000
-0006-5	7.7	10	483	500	ABB Control	OFAF000H10	000
-0009-5	10.0	16	993	500	ABB Control	OFAF000H16	000
-0011-5	12.5	16	993	500	ABB Control	OFAF000H16	000
-0016-5	17	20	1620	500	ABB Control	OFAF000H20	000
-0020-5	23	25	3100	500	ABB Control	OFAF000H25	000
-0025-5	31	40	9140	500	ABB Control	OFAF000H40	000
-0030-5	41	50	15400	500	ABB Control	OFAF000H50	000
-0040-5	47	63	21300	500	ABB Control	OFAF000H63	000
Three-phase supply voltage 525 V, 550 V, 575 V, 600 V, 660 V or **690** V							
-0011-7	12	16	1100	690	ABB Control	OFAA000GG16	000
-0016-7	15	20	2430	690	ABB Control	OFAA000GG20	000
-0020-7	21	25	4000	690	ABB Control	OFAA000GG25	000
-0025-7	24	32	7000	690	ABB Control	OFAA000GG32	000
-0030-7	33	35	11400	690	ABB Control	OFAA000GG35	000
-0040-7	35	50	22800	690	ABB Control	OFAA000GG50	000

PDM code: 00096931-J

Frame sizes R5 and R6

Choose between gG and aR fuses according to the table under *Quick guide for selecting between gG and aR fuses* on page *99*, or verify the operating time by **checking that the short-circuit current of the installation is at least the value given in the fuse table**. The short-circuit current can be calculated as follows:

$$I_{k2\text{-}ph} = \frac{U}{2 \cdot \sqrt{R_c^2 + (Z_k + X_c)^2}}$$

where

$I_{k2\text{-}ph}$ = short-circuit current in symmetrical two-phase short-circuit

U = network line-to-line voltage (U)

R_c = cable resistance (ohm)

$Z_k = z_k \cdot U_N^2/S_N$ = transformer impedance (ohm)

z_k = transformer impedance (%)

U_N = transformer rated voltage (V)

S_N = nominal apparent power of the transformer (kVA)

X_c = cable reactance (ohm).

Calculation example

Drive:

- ACS800-01-0075-3
- supply voltage

Transformer:

- rated power S_N = 600 kVA
- rated voltage (drive supply voltage) U_N = 430 V
- transformer impedance z_k = 7.2%.

Supply cable:

- length = 170 m
- resistance/length = 0.398 ohm/km
- reactance/length = 0.082 ohm/km.

$$Z_k = z_k \cdot \frac{U_N^2}{S_N} = 0.072 \cdot \frac{(430\ \text{V})^2}{600\ \text{kVA}} = 22.19\ \text{mohm}$$

$$R_c = 170\ \text{m} \cdot 0.398\ \frac{\text{ohm}}{\text{km}} = 67.66\ \text{mohm}$$

$$X_c = 170\ \text{m} \cdot 0.082\ \frac{\text{ohm}}{\text{km}} = 13.94\ \text{mohm}$$

$$I_{k2\text{-}ph} = \frac{410\ \text{V}}{2 \cdot \sqrt{(67.66\ \text{mohm})^2 + (22.19\ \text{mohm} + 13.94\ \text{mohm})^2}} = 2.7\ \text{kA}$$

The calculated short-circuit current 2.7 kA is higher than the minimum short-circuit current of the drive gG fuse type OFAF00H160 (2400 A). -> The 500 V gG fuse (ABB Control OFAF00H160) can be used.

Fuse tables for frame sizes R5 and R6

Standard gG fuses								
ACS800-01 size	**Input current**	**Min. short-circuit current 1)**	**Fuse**					
		A	A	A^2s *	V	Manufacturer	Type	IEC size
Three-phase supply voltage 208 V, 220 V, **230 V** or 240 V								
-0025-2	67	1050	80	34500	500	ABB Control	OFAF000H80	000
-0030-2	81	1480	100	63600	500	ABB Control	OFAF000H100	000
-0040-2	101	1940	125	103000	500	ABB Control	OFAF00H125	00
-0050-2	138	2400	160	200000	500	ABB Control	OFAF00H160	00
-0060-2	163	2850	200	350000	500	ABB Control	OFAF1H200	1
-0070-2	202	3300	224	420000	500	ABB Control	OFAF1H224	1
Three-phase supply voltage 380 V, **400 V** or 415 V								
-0040-3	69	1050	80	34500	500	ABB Control	OFAF000H80	000
-0050-3	83	1480	100	63600	500	ABB Control	OFAF000H100	000
-0060-3	100	1940	125	103000	500	ABB Control	OFAF00H125	00
-0075-3	142	2400	160	200000	500	ABB Control	OFAF00H160	00
-0070-3	138	2400	160	200000	500	ABB Control	OFAF00H160	00
-0100-3	163	2850	200	350000	500	ABB Control	OFAF1H200	1
-0120-3	198	3300	224	420000	500	ABB Control	OFAF1H224	1
-0135-3	221	3820	250	550000	500	ABB Control	OFAF1H250	1
-0165-3	254	4510	315	1100000	500	ABB Control	OFAF2H315	2
-0205-3	286	4510	315	1100000	500	ABB Control	OFAF2H315	2
Three-phase supply voltage 380 V, 400 V, 415 V, 440 V, 460 V, 480 V or **500** V								
-0050-5	64	1050	80	34500	500	ABB Control	OFAF000H80	000
-0060-5	78	1480	100	63600	500	ABB Control	OFAF000H100	000
-0070-5	95	1940	125	103000	500	ABB Control	OFAF00H125	00
-0105-5	142	2400	160	200000	500	ABB Control	OFAF00H160	00
-0100-5	121	2400	160	200000	500	ABB Control	OFAF00H160	00
-0120-5	155	2850	200	350000	500	ABB Control	OFAF1H200	1
-0140-5	180	2850	200	350000	500	ABB Control	OFAF1H200	1
-0165-5	222	3820	250	550000	500	ABB Control	OFAF1H250	1
-0205-5	256	4510	315	1100000	500	ABB Control	OFAF2H315	2
-0255-5	286	4510	315	1100000	500	ABB Control	OFAF2H315	2
Three-phase supply voltage 525 V, 550 V, 575 V, 600 V, 660 V or **690** V								
-0050-7	52	740	63	28600	690	ABB Control	OFAA0GG63	0
-0060-7	58	740	63	28600	690	ABB Control	OFAA0GG63	0
-0070-7	79	1050	80	52200	690	ABB Control	OFAA0GG80	0
-0100-7	91	1480	100	93000	690	ABB Control	OFAA1GG100	1
-0120-7	112	1940	125	126000	690	ABB Control	OFAA1GG125	1
-0145-7	131	2400	160	220000	690	ABB Control	OFAA1GG160	1
-0175-7	162	2850	200	350000	690	ABB Control	OFAA1GG200	1
-0205-7	186	3820	250	700000	690	ABB Control	OFAA2GG250	2

Standard gG fuses								
ACS800-01 size	**Input current**	**Min. short-circuit current 1)**	**Fuse**					
		A	A	A^2s *	V	Manufacturer	Type	IEC size
	* maximum total I^2t value for 550 V or 690 V 1) minimum short-circuit current of the installation **Note 1:** See also *Planning the electrical installation*: *Thermal overload and short-circuit protection*. For UL recognized fuses, see *NEMA data* on page *102*. **Note 2:** In multicable installations, install only one fuse per phase (not one fuse per conductor). **Note 3:** Larger fuses than the recommended ones must not be used. **Note 4:** Fuses from other manufacturers can be used if they meet the ratings and the melting curve of the fuse does not exceed the melting curve of the fuse mentioned in the table.								

PDM code: 00096931-J, 00556489

Ultrarapid (aR) fuses								
ACS800-01 size	**Input current**	**Min. short-circuit current 1)**	**Fuse**					
		A	A	A^2s	V	Manufacturer	Type	IEC size
Three-phase supply voltage 208 V, 220 V, **230 V** or 240 V								
-0025-2	67	400	100	4650	690	Bussmann	170M1567	DIN000
-0030-2	81	520	125	8500	690	Bussmann	170M1568	DIN000
-0040-2	101	695	160	8500	690	Bussmann	170M1569	DIN000
-0050-2	138	1630	315	80500	690	Bussmann	170M1572	DIN000
-0060-2	163	1280	315	46500	690	Bussmann	170M3817	DIN1*
-0070-2	202	1810	400	105000	690	Bussmann	170M3819	DIN1*
Three-phase supply voltage 380 V, **400 V** or 415 V								
-0040-3	69	400	100	4650	690	Bussmann	170M1567	DIN000
-0050-3	83	520	125	8500	690	Bussmann	170M1568	DIN000
-0060-3	100	695	160	8500	690	Bussmann	170M1569	DIN000
-0075-3	142	1630	315	80500	690	Bussmann	170M1572	DIN000
-0070-3	138	1630	315	80500	690	Bussmann	170M1572	DIN000
-0100-3	163	1280	315	46500	690	Bussmann	170M3817	DIN1*
-0120-3	198	1810	400	105000	690	Bussmann	170M3819	DIN1*
-0135-3	221	2210	500	145000	690	Bussmann	170M5810	DIN2*
-0165-3	254	2620	550	190000	690	Bussmann	170M5811	DIN2*
-0205-3	286	2620	550	190000	690	Bussmann	170M5811	DIN2*
Three-phase supply voltage 380 V, 400 V, 415 V, 440 V, 460 V, 480 V or **500** V								
-0050-5	64	400	100	4650	690	Bussmann	170M1567	DIN000
-0060-5	78	520	125	8500	690	Bussmann	170M1568	DIN000
-0070-5	95	520	125	8500	690	Bussmann	170M1568	DIN000
-0105-5	142	1630	315	80500	690	Bussmann	170M1572	DIN000
-0100-5	121	1630	315	80500	690	Bussmann	170M1572	DIN000
-0120-5	155	1280	315	46500	690	Bussmann	170M3817	DIN1*
-0140-5	180	1810	400	105000	690	Bussmann	170M3819	DIN1*
-0165-5	222	2210	500	145000	690	Bussmann	170M5810	DIN2*
-0205-5	256	2620	550	190000	690	Bussmann	170M5811	DIN2*
-0255-5	286	2620	550	190000	690	Bussmann	170M5811	DIN2*
Three-phase supply voltage 525 V, 550 V, 575 V, 600 V, 660 V or **690** V								
-0050-7	52	400	100	4650	690	Bussmann	170M1567	000

Ultrarapid (aR) fuses								
ACS800-01 size	**Input current**	**Min. short-circuit current [1)]**	**Fuse**					
		A	A	A^2s	V	Manufacturer	Type	IEC size
-0060-7	58	400	100	4650	690	Bussmann	170M1567	000
-0070-7	79	520	125	8500	690	Bussmann	170M1568	000
-0100-7	91	695	160	16000	690	Bussmann	170M1569	000
-0120-7	112	750	200	15000	690	Bussmann	170M3815	1*
-0145-7	131	1520	350	68500	690	Bussmann	170M3818	DIN1*
-0175-7	162	1520	350	68500	690	Bussmann	170M3818	DIN1*
-0205-7	186	1610	400	74000	690	Bussmann	170M5808	DIN2*

[1)] minimum short-circuit current of the installation

Note 1: See also *Planning the electrical installation*: *Thermal overload and short-circuit protection*. For UL recognized fuses, see *NEMA data* on page *102*.

Note 2: In multicable installations, install only one fuse per phase (not one fuse per conductor).

Note 3: Larger fuses than the recommended ones must not be used.

Note 4: Fuses from other manufacturers can be used if they meet the ratings and the melting curve of the fuse does not exceed the melting curve of the fuse mentioned in the table.

PDM code: 00096931-J, 00556489

Quick guide for selecting between gG and aR fuses

The table below is a short cut in selecting between gG and aR fuses. The combinations (cable size, cable length, transformer size and fuse type) in the table fulfil the minimum requirements for the proper operation of the fuse.

ACS800-01 size	Cable type		Supply transformer minimum apparent power S_N (kVA)					
	Copper	Aluminium	Maximum cable length with gG fuses			Maximum cable length with aR fuses		
			10 m	50 m	100 m	10 m	100 m	200 m
Three-phase supply voltage 208 V, 220 V, **230 V** or 240 V								
-0025-2	3×25 Cu	3×35 Al	31	38	-	27	27	-
-0030-2	3×35 Cu	3×50 Al	44	55	-	33	33	-
-0040-2	3×50 Cu	3×70 Al	58	71	-	41	41	-
-0050-2	3×70 Cu	3×95 Al	72	87	-	55	70	-
-0060-2	3×95 Cu	3×120 Al	85	110	-	65	70	-
-0070-2	3×120 Cu	3×185 Al	99	120	-	81	81	-
Three-phase supply voltage 380 V, **400 V** or 415 V								
-0040-3	3×25 Cu	3×35 Al	54	57	71	48	48	48
-0050-3	3×35 Cu	3×50 Al	76	82	110	58	58	58
-0060-3	3×50 Cu	3×70 Al	100	110	140	70	70	70
-0075-3	3×70 Cu	3×95 Al	130	140	160	99	99	140
-0070-3	3×70 Cu	3×95 Al	130	140	160	96	96	140
-0100-3	3×95 Cu	3×120 Al	150	160	190	120	120	140
-0120-3	3×120 Cu	3×185 Al	170	190	210	140	140	140
-0135-3	3×150 Cu	3×240 Al	200	220	250	160	160	160
-0165-3	3×185 Cu	3×240 Al	240	260	310	180	180	200
-0205-3	3×240 Cu	2×(3×95) Al	232	257	310	134	153	196
Three-phase supply voltage 380 V, 400 V, 415 V, 440 V, 460 V, 480 V or **500** V								
-0050-5	3×25 Cu	3×35 Al	67	70	79	56	56	56
-0060-5	3×25 Cu	3×50 Al	95	110	130	68	68	68
-0070-5	3×35 Cu	3×70 Al	130	140	160	83	83	83
-0105-5	3×70 Cu	3×95 Al	160	170	190	130	130	150
-0100-5	3×70 Cu	3×95 Al	160	170	190	110	120	150
-0120-5	3×95 Cu	3×120 Al	190	200	220	140	140	150
-0140-5	3×95 Cu	3×150 Al	190	200	220	160	160	160
-0165-5	3×150 Cu	3×240 Al	250	260	290	200	200	200
-0205-5	3×185 Cu	3×240 Al	290	320	360	230	230	230
-0255-5	3×240 Cu	2×(3×95) Al	289	312	355	167	185	218
Three-phase supply voltage 525 V, 550 V, 575 V, 600 V, 660 V or **690** V								
-0050-7	3×16 Cu	3×25 Al	65	67	70	63	63	63
-0060-7	3×16 Cu	3×25 Al	70	70	70	70	70	70
-0070-7	3×25 Cu	3×50 Al	95	95	99	95	95	95
-0100-7	3×35 Cu	3×50 Al	130	140	150	110	110	110
-0120-7	3×50 Cu	3×70 Al	180	180	190	140	140	140
-0145-7	3×70 Cu	3×95 Al	220	220	240	160	160	160
-0175-7	3×95 Cu	3×120 Al	260	260	280	200	200	200
-0205-7	3×95 Cu	3×150 Al	340	360	390	230	230	230

Note 1: The supply transformer minimum power in kVA is calculated with a z_k value of 6% and frequency 50 Hz.

Note 2: The table is not intended for transformer selection - that must be done separately.

The following parameters may effect on correct the operation of the protection:

- cable length, i.e. the longer the cable the weaker the fuse protection, as the long cable limits the fault current
- cable size, i.e. the smaller the cable the weaker the fuse protection, as the small cable size limits the fault current
- transformer size, i.e the smaller the transformer the weaker the fuse protection, as the small transformer limits the fault current
- transformer impedance, i.e. the higher the z_k the weaker the fuse protection as high impedance limits the fault current.

The protection can be improved by installling a larger supply transformer and/or bigger cables, and in most cases by selecting aR fuses instead of gG fuses. Selection of smaller fuses improves the protection, but may also affect the fuse life time and lead to unnecessary operation of the fuses.

In case of any uncertainty regarding the drive protection, please contact your local ABB.

Cable types

The table below gives copper and aluminium cable types for different load currents. Cable sizing is based on max. 9 cables laid on a cable ladder side by side, ambient temperature 30 °C, PVC insulation, surface temperature 70 °C (EN 60204-1 and IEC 60364-5-52/2001). For other conditions, size the cables according to local safety regulations, appropriate input voltage and the load current of the drive.

Copper cables with concentric copper shield		**Aluminium cables with concentric copper shield**	
Max. load current A	**Cable type** mm^2	**Max. load current** A	**Cable type** mm^2
13	3×1.5	61	3×25
18	3×2.5	69	3×35
24	3×4	83	3×50
30	3×6	107	3×70
42	3×10	130	3×95
56	3×16	151	3×120
71	3×25	174	3×150
88	3×35	199	3×185
107	3×50	235	3×240
137	3×70	274	3 × (3×50)
167	3×95	260	2 × (3×95)
193	3×120		
223	3×150		
255	3×185		

3BFA 01051905 C

Cable entries

Brake resistor, mains and motor cable terminal sizes (per phase), accepted cable diameters and tightening torques are given below.

Frame size	U1, V1, W1, U2, V2, W2, R+, R-				Earthing PE	
	Wire size	Max. cable Ø IP 21	Cable Ø IP 55	Tightening torque	Wire size	Tightening torque
	mm^2	mm	mm	Nm	mm^2	Nm
R2	up to 16*	21	14...20	1.2...1.5	up to 10	1.5
R3	up to 16*	21	14...20	1.2...1.5	up to 10	1.5
R4	up to 25	29	23...35	2…4	up to 16	3.0
R5	6...70	35	23...35	15	6...70	15
R6	95...240 **	63	30...45	20...40	95	8

* 16 mm^2 rigid solid cable, 10 mm^2 flexible stranded cable

** with cable lugs 16...70 mm^2, tightening torque 20...40 Nm. Cable lugs are not included in the delivery. See page 57.

Dimensions, weights and noise

H1 height with cable connection box, H2 height without cable connection box.

Frame size	IP 21					IP 55				Noise
	H1	H2	Width	Depth	Weight	Height	Width	Depth	Weight	
	mm	mm	mm	mm	kg	mm	mm	mm	kg	dB
R2	405	370	165	226	9	528	263	241	16	62
R3	471	420	173	265	14	528	263	273	18	62
R4	607	490	240	274	26	774	377	278	33	62
R5	739	602	265	286	34	775	377	308	51	65
R6	880*	700	300	399	67*	923	420	420	77	65

* In -0205-3 and -0255-5 units, H1 is 977 mm and weight is 70 kg.

NEMA data

Ratings

The NEMA ratings for the ACS800-U1 with 60 Hz supplies are given below. The symbols are described below the table. For sizing, derating and 50 Hz supplies, see *IEC data* on page *89*.

ACS800-U1 size	I_{max}	Normal use		Heavy-duty use		Frame size	Air flow	Heat dissipation
		I_{2N}	P_N	I_{2hd}	P_{hd}			
	A	A	HP	A	HP		ft^3/min	BTU/Hr
Three-phase supply voltage 208 V, 220 V, **230 V** or 240 V								
-0002-2	8.2	6.6	1.5	4.6	1	R2	21	350
-0003-2	10.8	8.1	2	6.6	1.5	R2	21	350
-0004-2	13.8	11	3	7.5	2	R2	21	410
-0006-2	24	21	5	13	3	R3	41	550
-0009-2	32	27	7.5	17	5	R3	41	680
-0011-2	46	34	10	25	7.5	R3	41	850
-0016-2	62	42	15	31	10	R4	61	1150
-0020-2	72	54	20 *	42	15 **	R4	61	1490
-0025-2	86	69	25	54	20 **	R5	147	1790
-0030-2	112	80	30	68	25 **	R5	147	2090
-0040-2	138	104	40 *	80	30 **	R5	147	2770
-0050-2	164	132	50	104	40	R6	238	3370
-0060-2	202	157	60	130	50 **	R6	238	4050
-0070-2	282	192	75	154	60 **	R6	238	4910
Three-phase supply voltage 380 V, 400 V, 415 V, 440 V, **460** V or 480 V								
-0004-5	6.5	4.9	3	3.4	2	R2	21	410
-0005-5	8.2	6.2	3	4.2	2	R2	21	480
-0006-5	10.8	8.1	5	5.6	3	R2	21	550
-0009-5	13.8	11	7.5	8.1	5	R2	21	690
-0011-5	17.6	14	10	11	7.5	R2	21	860
-0016-5	24	21	15	15	10	R3	41	1150
-0020-5	32	27	20	21	15	R3	41	1490
-0025-5	46	34	25	27	20	R3	41	1790
-0030-5	62	42	30	34	25	R4	61	2090
-0040-5	72	52	40	37	30 ***	R4	61	2770
-0050-5	86	65	50	52	40	R5	147	3370
-0060-5	112	79	60	65	50	R5	147	4050
-0070-5	138	96	75	77	60	R5	147	4910
-0105-5	170	141	100	100	75	R5	238	7340
-0100-5	164	124	100	96	75	R6	238	6610
-0120-5	202	157	125	124	100	R6	238	7890
-0140-5	282	180	150	156	125	R6	238	9600
-0205-5	326	245	200	215	150	R6	238	12980

ACS800-U1 size	I_{max}	Normal use		Heavy-duty use		Frame size	Air flow	Heat dissipation
		I_{2N}	P_N	I_{2hd}	P_{hd}			
	A	A	HP	A	HP		ft^3/min	BTU/Hr
Three-phase supply voltage 525 V, **575 V**, 600 V								
-0011-7	14	11.5	10	8.5	7.5	R4	61	1050
-0016-7	19	15	10	11	10	R4	61	1200
-0020-7	28	20	15/20 ****	15	15**	R4	61	1550
-0025-7	38	23	20	20	20**	R4	61	1850
-0030-7	44	30	25/30 ****	25	25**	R4	61	2100
-0040-7	54	34	30	30	30**	R4	61	2400
-0050-7	68	46	40	40	40**	R5	147	2900
-0060-7	84	52	50	42	40	R5	147	3450
-0070-7	104	73	60	54	50	R6	238	4200
-0100-7	124	86	75	62	60	R6	238	5650
-0120-7	172	108	100	86	75	R6	238	6700
-0145-7	190	125	125	99	100	R6	238	9100
-0175-7	245	155	150	131	125	R6	238	11850
-0205-7	245	192	200	147	150	R6	238	14300

PDM code: 00096931-J

* Overload may be limited to 5% at high speeds (> 90% speed) by the internal power limit of the drive. The limitation also depends on motor characteristics and network voltage.

** Overload may be limited to 40% at high speeds (> 90% speed) by the internal power limit of the drive. The limitation also depends on motor characteristics and network voltage.

*** special 4-pole high-efficiency NEMA motor

**** higher rating is available with special 4-pole high-efficiency NEMA motor

Symbols

Nominal ratings

I_{max} maximum output current. Available for 10 s at start, otherwise as long as allowed by drive temperature.

Normal use (10% overload capability)

I_{2N} continuous rms current. 10% overload is typically allowed for one minute every 5 minutes.

P_N typical motor power. The power ratings apply to most 4-pole NEMA rated motors (230 V, 460 V or 575 V).

Heavy-duty use (50% overload capability)

I_{2hd} continuous rms current. 50% overload is typically allowed for one minute every 5 minutes.

P_{hd} typical motor power. The power ratings apply to most 4-pole NEMA rated motors (230 V, 460 V or 575 V).

Note 1: The ratings apply at an ambient temperature of 40 °C (104 °F). In lower temperatures the ratings are higher (except I_{max}).

Sizing

See page 91.

Derating

See page 92.

Fuses

UL class T fuses fuses for branch circuit protection are listed below. Fast acting class T or faster fuses are recommended in the USA.

Check from the fuse time-current curve that the operating time of the fuse is below 0.5 seconds for units of frame sizes R2 to R4 and 0.1 seconds for units of frame sizes R5 and R6. The operating time depends on the supply network impedance and the cross-sectional area and length of the supply cable. The short-circuit current can be calculated as shown in section *Frame sizes R5 and R6* on page *94*.

Note 1: See also *Planning the electrical installation*: *Thermal overload and short-circuit protection*.

Note 2: In multicable installations, install only one fuse per phase (not one fuse per conductor).

Note 3: Larger fuses must not be used.

Note 4: Fuses from other manufacturers can be used if they meet the ratings and the melting curve of the fuse does not exceed the melting curve of the fuse mentioned in the table.

ACS800-U1 type	Frame size	Input current	Fuse				
		A	A	V	Manufacturer	Type	UL class
Three-phase supply voltage 208 V, 220 V, **230 V** or 240 V							
-0002-2	R2	5.2	10	600	Bussmann	JJS-10	T
-0003-2	R2	6.5	10	600	Bussmann	JJS-10	T
-0004-2	R2	9.2	15	600	Bussmann	JJS-15	T
-0006-2	R3	18	25	600	Bussmann	JJS-25	T
-0009-2	R3	24	30	600	Bussmann	JJS-30	T
-0011-2	R3	31	40	600	Bussmann	JJS-40	T
-0016-2	R4	38	50	600	Bussmann	JJS-50	T
-0020-2	R4	49	70	600	Bussmann	JJS-70	T
-0025-2	R5	64	90	600	Bussmann	JJS-90	T
-0030-2	R5	75	100	600	Bussmann	JJS-100	T
-0040-2	R5	102	125	600	Bussmann	JJS-125	T
-0050-2	R6	126	175	600	Bussmann	JJS-175	T
-0060-2	R6	153	200	600	Bussmann	JJS-200	T
-0070-2	R6	190	250	600	Bussmann	JJS-250	T
Three-phase supply voltage 380 V, 400 V, 415 V, 440 V, **460 V** or 480 V							
-0004-5	R2	4.1	10	600	Bussmann	JJS-10	T
-0005-5	R2	5.4	10	600	Bussmann	JJS-10	T
-0006-5	R2	6.9	10	600	Bussmann	JJS-10	T
-0009-5	R2	9.8	15	600	Bussmann	JJS-15	T
-0011-5	R2	13	20	600	Bussmann	JJS-20	T
-0016-5	R3	18	25	600	Bussmann	JJS-25	T
-0020-5	R3	24	35	600	Bussmann	JJS-35	T
-0025-5	R3	31	40	600	Bussmann	JJS-40	T
-0030-5	R4	40	50	600	Bussmann	JJS-50	T
-0040-5	R4	52	70	600	Bussmann	JJS-70	T
-0050-5	R5	63	80	600	Bussmann	JJS-80	T
-0060-5	R5	77	100	600	Bussmann	JJS-100	T
-0070-5	R5	94	125	600	Bussmann	JJS-125	T
-0105-5	R5	138	150	600	Bussmann	JJS-150	T
-0100-5	R6	121	150	600	Bussmann	JJS-150	T
-0120-5	R6	155	200	600	Bussmann	JJS-200	T
-0140-5	R6	179	225	600	Bussmann	JJS-225	T
-0205-5	R6	243	350	600	Bussmann	JJS-350	T

ACS800-U1 type	Frame size	Input current	Fuse				
		A	A	V	Manufacturer	Type	UL class
Three-phase supply voltage 525 V, **575 V**, 600 V							
-0011-7	R4	10	20	600	Bussmann	JJS-20	T
-0016-7	R4	13	20	600	Bussmann	JJS-20	T
-0020-7	R4	19	30	600	Bussmann	JJS-30	T
-0025-7	R4	21	30	600	Bussmann	JJS-30	T
-0030-7	R4	29	45	600	Bussmann	JJS-45	T
-0040-7	R4	32	45	600	Bussmann	JJS-45	T
-0050-7	R5	45	70	600	Bussmann	JJS-70	T
-0060-7	R5	51	80	600	Bussmann	JJS-80	T
-0070-7	R6	70	100	600	Bussmann	JJS-100	T
-0100-7	R6	82	125	600	Bussmann	JJS-125	T
-0120-7	R6	103	150	600	Bussmann	JJS-150	T
-0145-7	R6	121	200	600	Bussmann	JJS-200	T
-0175-7	R6	150	200	600	Bussmann	JJS-200	T
-0205-7	R6	188	250	600	Bussmann	JJS-250	T

PDM code: 00096931-J, 00556489

Cable types

Cable sizing is based on NEC Table 310-16 for copper wires, 75 °C (167 °F) wire insulation at 40 °C (104 °F) ambient temperature. Not more than three current-carrying conductors in raceway or cable or earth (directly buried). For other conditions, dimension the cables according to local safety regulations, appropriate input voltage and the load current of the drive.

Copper cables with concentric copper shield	
Max. load current A	**Cable type** AWG/MCM
18	14
22	12
31	10
44	8
57	6
75	4
88	3
101	2
114	1
132	1/0
154	2/0
176	3/0
202	4/0
224	250 MCM or 2 × 1
251	300 MCM or 2 × 1/0

PDM code: 00096931-C

Cable Entries

Brake resistor, input and motor cable (per phase) terminal sizes, accepted cable diameters and tightening torques are given below.

Frame size	U1, V1, W1, U2, V2, W2, R+, R-			Earthing PE	
	Wire size	Knock-out hole Ø (UL type 1)	Tightening torque	Wire size	Tightening torque
	AWG	in.	lbf ft	AWG	lbf ft
R2	up to 6*	1.10	0.9…1.1	up to 8	1.1
R3	up to 6*	1.14	0.9...1.1	up to 8	1.1
R4	up to 4	1.38	1.5…3.0	up to 5	2.2
R5	10…2/0	1.97	11.1	10...2/0	11.1
R6	3/0…350 AWG** †	2.40 †	14.8...29.5	4/0	5.9

* 6 AWG rigid solid cable, 8 AWG flexible stranded cable

** with cable lugs 6...2/0 AWG, tightening torque 14.8...29.5 lbf ft. Cable lugs are not included in the delivery. See page 57.

† In -0205-3 and -0255-5 units, wire size is 3/0…500 MCM and knockout hole diameter is 3.50 in.

Dimensions, weights and noise

H1 height with gland box, H2 height without gland box.

Frame size	UL type 1					UL type 12				Noise
	H1	H2	Width	Depth	Weight	Height	Width	Depth	Weight	
	in.	in.	in.	in.	lb	in.	in.	in.	lb	dB
R2	15.96	14.57	6.50	8.89	20	20.78	10.35	9.49	34	62
R3	18.54	16.54	6.81	10.45	31	20.78	10.35	10.74	41	62
R4	23.87	19.29	9.45	10.79	57	30.49	14.84	10.94	73	62
R5	29.09	23.70	10.43	11.26	75	30.49	14.84	12.14	112	65
R6	34.65*	27.56	11.81	15.75	148*	36.34	16.52	16.54	170	65

* In -0205-3 and -0255-5 units, H1 is 38.46 in. and weight is 150 lb.

Input power connection

Voltage (U_1)	208/220/230/240 V AC 3-phase ± 10% for 230 V AC units 380/400/415 V AC 3-phase ± 10% for 400 V AC units 380/400/415/440/460/480/500 V AC 3-phase ± 10% for 500 V AC units 525/550/575/600/660/690 V AC 3-phase ± 10% for 690 V AC units
Short-circuit withstand strength (IEC 60439-1)	Maximum allowable prospective short-circuit current is 65 kA when protected by fuses given in the *IEC data* fuse tables.
Short-circuit current protection (UL 508 C CSA C22.2 No. 14-05)	US and Canada: The drive is suitable for use on a circuit capable of delivering not more than 100 kA rms symmetrical amperes at the drive nominal voltage when protected by fuses given in the *NEMA data* fuse table.
Frequency	48 to 63 Hz, maximum rate of change 17%/s
Imbalance	Max. ± 3% of nominal phase to phase input voltage
Fundamental power factor (cos phi$_1$)	0.98 (at nominal load)

Motor connection

Voltage (U_2)

0 to U_1, 3-phase symmetrical, U_{max} at the field weakening point

Frequency

DTC mode: 0 to 3.2 · f_{FWP}. Maximum frequency 300 Hz.

$$f_{FWP} = \frac{U_{Nmains}}{U_{Nmotor}} \cdot f_{Nmotor}$$

f_{FWP}: frequency at field weakening point; U_{Nmains}: mains (input power) voltage; U_{Nmotor}: rated motor voltage; f_{Nmotor}: rated motor frequency

Frequency resolution

0.01 Hz

Current

See section *IEC data.*

Power limit

1.5 · P_{hd}, 1.1 · P_N or $P_{cont.max}$ (whichever value is greatest)

Field weakening point

8 to 300 Hz

Switching frequency

3 kHz (average). In 690 V units 2 kHz (average).

Maximum recommended motor cable length

Sizing method	**Max. motor cable length**	
	DTC control	Scalar control
according to I_{2N} and I_{2hd}	R2 to R3: 100 m (328 ft) R4 to R6: 300 m (984 ft)	R2: 150 m (492 ft) R3 to R6: 300 m (984 ft)
according to $I_{cont.max}$ at ambient temperatures below 30 °C (86 °F)		
according to $I_{cont.max}$ at ambient temperatures above 30 °C (86 °F)	R2: 50 m (164 ft) **Note:** This applies to units with EMC filter also. R3 and R4: 100 m (328 ft) R5 and R6: 150 m (492 ft)	

Note: With cables longer than 100 m (328 ft), the EMC Directive requirements may not be fulfilled. See section *CE marking*.

Efficiency

Approximately 98% at nominal power level

Cooling

Method	Internal fan, flow direction from bottom to top.
Free space around the unit	See chapter *Mechanical installation*.

Degrees of protection

IP 21 (UL type 1) and IP 55 (UL type 12). Without connection box and front cover, the unit must be protected against contact according to IP 2x [see chapter *Electrical installation*: *Cabinet installation (IP 21, UL type 1)*].

Ambient conditions

Environmental limits for the drive are given below. The drive is to be used in a heated, indoor, controlled environment.

	Operation installed for stationary use	**Storage** in the protective package	**Transportation** in the protective package
Installation site altitude	0 to 4000 m (13123 ft) above sea level [above 1000 m (3281 ft), see section *Derating*]	-	-
Air temperature	-15 to +50 °C (5 to 122 °F). No frost allowed. See section *Derating*.	-40 to +70 °C (-40 to +158 °F)	-40 to +70 °C (-40 to +158 °F)
Relative humidity	5 to 95%	Max. 95%	Max. 95%
	No condensation allowed. Maximum allowed relative humidity is 60% in the presence of corrosive gases.		
Contamination levels (IEC 60721-3-3, IEC 60721-3-2, IEC 60721-3-1)	No conductive dust allowed.		
	Boards without coating: Chemical gases: Class 3C1 Solid particles: Class 3S2 **Boards with coating:** Chemical gases: Class 3C2 Solid particles: Class 3S2	**Boards without coating:** Chemical gases: Class 1C2 Solid particles: Class 1S3 **Boards with coating:** Chemical gases: Class 1C2 Solid particles: Class 1S3	**Boards without coating:** Chemical gases: Class 2C2 Solid particles: Class 2S2 **Boards with coating:** Chemical gases: Class 2C2 Solid particles: Class 2S2
Atmospheric pressure	70 to 106 kPa 0.7 to 1.05 atmospheres	70 to 106 kPa 0.7 to 1.05 atmospheres	60 to 106 kPa 0.6 to 1.05 atmospheres
Vibration (IEC 60068-2)	Max. 1 mm (0.04 in.) (5 to 13.2 Hz), max. 7 m/s^2 (23 ft/s^2) (13.2 to 100 Hz) sinusoidal	Max. 1 mm (0.04 in.) (5 to 13.2 Hz), max. 7 m/s^2 (23 ft/s^2) (13.2 to 100 Hz) sinusoidal	Max. 3.5 mm (0.14 in.) (2 to 9 Hz), max. 15 m/s^2 (49 ft/s^2) (9 to 200 Hz) sinusoidal
Shock (IEC 60068-2-29)	Not allowed	Max. 100 m/s^2 (330 ft./s^2), 11 ms	Max. 100 m/s^2 (330 ft./s^2), 11 ms
Free fall	Not allowed	250 mm (10 in.) for weight under 100 kg (220 lb) 100 mm (4 in.) for weight over 100 kg (220 lb)	250 mm (10 in.) for weight under 100 kg (220 lb) 100 mm (4 in.) for weight over 100 kg (220 lb)

Materials

Drive enclosure	• PC/ABS 2.5 mm, colour NCS 1502-Y (RAL 90021 / PMS 420 C) • hot-dip zinc coated steel sheet 1.5 to 2 mm, thickness of coating 100 micrometres • cast aluminium AlSi (R2 and R3) • extruded aluminium AlSi (R4 to R6)
Package	Corrugated cardboard (IP 21 units of frame sizes R2 to R5 and option modules), plywood (frame size R6 and IP 55 units of frame sizes R4 and R5), expanded polystyrene. Plastic covering of the package: PE-LD, bands PP or steel.
Disposal	The drive contains raw materials that should be recycled to preserve energy and natural resources. The package materials are environmentally compatible and recyclable. All metal parts can be recycled. The plastic parts can either be recycled or burned under controlled circumstances, according to local regulations. Most recyclable parts are marked with recycling marks. If recycling is not feasible, all parts excluding electrolytic capacitors and printed circuit boards can be landfilled. The DC capacitors (C1-1 to C1-x) contain electrolyte and the printed circuit boards contain lead, both of which are classified as hazardous waste within the EU. They must be removed and handled according to local regulations. For further information on environmental aspects and more detailed recycling instructions, please contact your local ABB distributor.

Applicable standards

	The drive complies with the following standards. The compliance with the European Low Voltage Directive is verified according to standards EN 61800-5-1 and EN 60204-1.
• EN 60204-1 (2006)	Safety of machinery. Electrical equipment of machines. Part 1: General requirements. *Provisions for compliance:* The final assembler of the machine is responsible for installing - an emergency-stop device - a supply disconnecting device.
• EN 60529: 1991 (IEC 60529)	Degrees of protection provided by enclosures (IP code)
• IEC 60664-1 (2007)	Insulation coordination for equipment within low-voltage systems. Part 1: Principles, requirements and tests.
• EN 61800-3 (2004)	Adjustable speed electrical power drive systems. Part 3: EMC requirements and specific test methods
• EN 61800-5-1 (2003)	Adjustable speed electrical power drive systems. Part 5-1: Safety requirements – electrical, thermal and energy
• UL 508C (2002)	UL Standard for Safety, Power Conversion Equipment, second edition
• NEMA 250 (2003)	Enclosures for Electrical Equipment (1000 Volts Maximum)
• CSA C22.2 No. 14-05 (2005)	Industrial control equipment

CE marking

A CE mark is attached to the drive to verify that the unit follows the provisions of the European Low Voltage and EMC Directives (Directive 73/23/EEC, as amended by 93/68/EEC and Directive 89/336/EEC, as amended by 2004/108EC).

Definitions

EMC stands for **E**lectro**m**agnetic **C**ompatibility. It is the ability of electrical/electronic equipment to operate without problems within an electromagnetic environment. Likewise, the equipment must not disturb or interfere with any other product or system within its locality.

First environment includes establishments connected to a low-voltage network which supplies buildings used for domestic purposes.

Second environment includes establishments connected to a network not supplying domestic premises.

Drive of category C2: drive of rated voltage less than 1000 V and intended to be installed and commissioned only by a professional when used in the first environment. **Note:** A professional is a person or organisation having necessary skills in installing and/or commissioning power drive systems, including their EMC aspects.

Drive of category C3: drive of rated voltage less than 1000 V and intended for use in the second environment and not intended for use in the first environment.

Drive of category C4: drive of rated voltage equal to or above 1000 V, or rated current equal to or above 400 A, or intended for use in complex systems in the second environment.

Compliance with the EMC Directive

The EMC Directive defines the requirements for immunity and emissions of electrical equipment used within the European Union. The EMC product standard [EN 61800-3 (2004)] covers requirements stated for drives.

Compliance with the EN 61800-3 (2004)

First environment (drive of category C2)

The drive complies with the standard with the following provisions:

1. The drive is equipped with EMC filter +E202.
2. The motor and control cables are selected as specified in the *Hardware Manual*.
3. The drive is installed according to the instructions given in the *Hardware Manual*.
4. Maximum cable length is 100 metres.

WARNING! The drive may cause radio interference if used in a residential or domestic environment. The user is required to take measures to prevent interference, in addition to the requirements for CE compliance listed above, if necessary.

Note: It is not allowed to install a drive equipped with EMC filter +E202 on IT (unearthed) systems. The supply network becomes connected to earth potential through the EMC filter capacitors which may cause danger or damage the unit.

Second environment (drive of category C3)

The drive complies with the standard with the following provisions:

1. Frame sizes R2...R5: The drive is equipped with EMC filter +E200. The filter is suitable for TN (earthed) systems only.
   Frame size R6: The drive is equipped with EMC filter +E210. The filter is suitable for TN (earthed) and IT (unearthed) systems.
2. The motor and control cables are selected as specified in the *Hardware Manual*.
3. The drive is installed according to the instructions given in the *Hardware Manual*.
4. Maximum cable length is 100 metres.

WARNING! A drive of category C3 is not intended to be used on a low-voltage public network which supplies domestic premises. Radio frequency interference is expected if the drive is used on such a network.

Second environment (drive of category C4)

If the provisions under *Second environment (drive of category C3)* cannot be met, e.g. the drive cannot be equipped with EMC filter +E200 when installed to an IT (unearthed) network, the requirements of the standard can be met as follows:

1. It is ensured that no excessive emission is propagated to neighbouring low-voltage networks. In some cases, the inherent suppression in transformers and cables is sufficient. If in doubt, a supply transformer with static screening between the primary and secondary windings can be used.

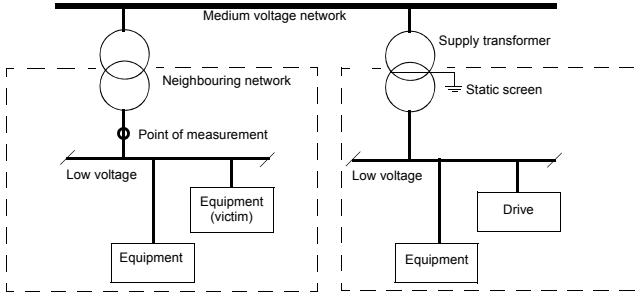

2. An EMC plan for preventing disturbances is drawn up for the installation. A template is available from the local ABB representative.
3. The motor and control cables are selected as specified in the *Hardware Manual*.
4. The drive is installed according to the instructions given in the *Hardware Manual*.

WARNING! A drive of category C4 is not intended to be used on a low-voltage public network which supplies domestic premises. Radio frequency interference is expected if the drive is used on such a network.

Machinery Directive

The drive complies with the European Union Machinery Directive (98/37/EC) requirements for an equipment intended to be incorporated into machinery.

“C-tick” marking

“C-tick” marking is required in Australia and New Zealand. A “C-tick” mark is attached to each drive in order to verify compliance with the relevant standard (IEC 61800-3 (2004) – Adjustable speed electrical power drive systems. Part 3: EMC requirements and specific test methods), mandated by the Trans-Tasman Electromagnetic Compatibility Scheme.

Definitions

EMC stands for **E**lectro**m**agnetic **C**ompatibility. It is the ability of electrical/electronic equipment to operate without problems within an electromagnetic environment. Likewise, the equipment must not disturb or interfere with any other product or system within its locality.

The Trans-Tasman Electromagnetic Compatibility Scheme (EMCS) was introduced by the Australian Communication Authority (ACA) and the Radio Spectrum Management Group (RSM) of the New Zealand Ministry of Economic Development (NZMED) in November 2001. The aim of the scheme is to protect the radiofrequency spectrum by introducing technical limits for emission from electrical/electronic products.

First environment includes establishments connected to a low-voltage network which supplies buildings used for domestic purposes.

Second environment includes establishments connected to a network not supplying domestic premises.

Drive of category C2: drive of rated voltage less than 1000 V and intended to be installed and commissioned only by a professional when used in the first environment. **Note:** A professional is a person or organisation having necessary skills in installing and/or commissioning power drive systems, including their EMC aspects.

Drive of category C3: drive of rated voltage less than 1000 V and intended for use in the second environment and not intended for use in the first environment.

Drive of category C4: drive of rated voltage equal to or above 1000 V, or rated current equal to or above 400 A, or intended for use in complex systems in the second environment.

Compliance with IEC 61800-3

First environment (drive of category C2)

The drive complies with the limits of IEC 61800-3 with the following provisions:

1. The drive is equipped with EMC filter +E202.
2. The drive is installed according to the instructions given in the *Hardware Manual*.
3. The motor and control cables used are selected as specified in the *Hardware Manual*.
4. Maximum cable length is 100 metres.

WARNING! The drive may cause radio interference if used in a residential or domestic environment. The user is required to take measures to prevent interference, in addition to the requirements for CE compliance listed above, if necessary.

Note: The drive must not be equipped with EMC filter +E202 when installed to IT (unearthed) systems. The mains becomes connected to earth potential through the EMC filter capacitors. In IT systems this may cause danger or damage the unit.

Second environment (drive of category C3)

The drive complies with the standard with the following provisions:

1. Frame sizes R2...R5: The drive is equipped with EMC filter +E200. The filter is suitable for TN (earthed) systems only.
   Frame size R6: The drive is equipped with EMC filter +E210. The filter is suitable for TN (earthed) and IT (unearthed) systems.
2. The motor and control cables are selected as specified in the *Hardware Manual*.
3. The drive is installed according to the instructions given in the *Hardware Manual*.
4. Maximum cable length is 100 metres.

WARNING! A drive of category C3 is not intended to be used on a low-voltage public network which supplies domestic premises. Radio frequency interference is expected if the drive is used on such a network.

Second environment (drive of category C4)

If the provisions under *Second environment (drive of category C3)* cannot be met, e.g. the drive cannot be equipped with EMC filter +E200 when installed to an IT (unearthed) network, the requirements of the standard can be met as follows for restricted distribution:

1. It is ensured that no excessive emission is propagated to neighbouring low-voltage networks. In some cases, the inherent suppression in transformers and cables is sufficient. If in doubt, a supply transformer with static screening between the primary and secondary windings can be used.

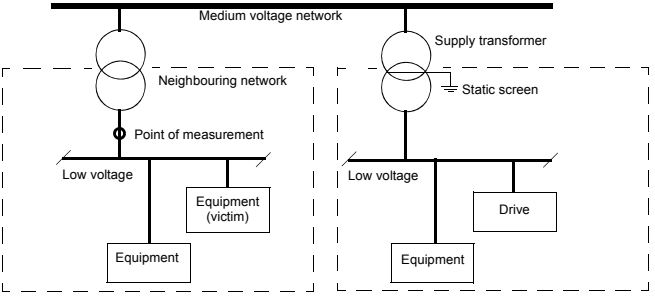

2. An EMC plan for preventing disturbances is drawn up for the installation. A template is available from the local ABB representative.
3. The motor and control cables are selected as specified in the *Hardware Manual*.
4. The drive is installed according to the instructions given in the *Hardware Manual*.

WARNING! A drive of category C4 is not intended to be used on a low-voltage public network which supplies domestic premises. Radio frequency interference is expected if the drive is used on such a network.

Marine type approvals

See *ACS800-01/U1/04/U4 Marine Supplement* [3AFE68291275 (English)].

UL/CSA markings

The ACS800-01 and ACS800-U1 units of UL type 1 are C-UL US listed and CSA marked.

UL

The drive is suitable for use on a circuit capable of delivering not more than 100 kA rms symmetrical amperes at the drive nominal voltage (600 V maximum for 690 V units) when protected by fuses given in the *NEMA data* fuse table. The ampere rating is based on tests done according to UL 508C.

The drive provides overload protection in accordance with the National Electrical Code (US). See *ACS800 Firmware Manual* for setting. Default setting is off, must be activated at start-up.

The drives are to be used in a heated indoor controlled environment. See section *Ambient conditions* for specific limits.

Brake chopper - ABB has brake choppers that, when applied with appropriately sized brake resistors, will allow the drive to dissipate regenerative energy (normally associated with quickly decelerating a motor). Proper application of the brake chopper is defined in chapter *Resistor braking.*

US patents

This product is protected by one or more of the following US patents:

4,920,306	5,301,085	5,463,302	5,521,483	5,532,568	5,589,754
5,612,604	5,654,624	5,799,805	5,940,286	5,942,874	5,952,613
6,094,364	6,147,887	6,175,256	6,184,740	6,195,274	6,229,356
6,252,436	6,265,724	6,305,464	6,313,599	6,316,896	6,335,607
6,370,049	6,396,236	6,448,735	6,498,452	6,552,510	6,597,148
6,600,290	6,741,059	6,774,758	6,844,794	6,856,502	6,859,374
6,922,883	6,940,253	6,934,169	6,956,352	6,958,923	6,967,453
6,972,976	6,977,449	6,984,958	6,985,371	6,992,908	6,999,329
7,023,160	7,034,510	7,036,223	7,045,987	7,057,908	7,059,390
7,067,997	7,082,374	7,084,604	7,098,623	7,102,325	7,109,780
7,164,562	7,176,779	7,190,599	7,215,099	7,221,152	7,227,325
7,245,197	7,250,739	7,262,577	7,271,505	7,274,573	7,279,802
7,280,938	7,330,095	7,349,814	7,352,220	7,365,622	7,372,696
7,388,765	D503,931	D510,319	D510,320	D511,137	D511,150
D512,026	D512,696	D521,466	D541,743S	D541,744S	D541,745S
D548,182S	D548,183S				

Equipment warranty and liability

The manufacturer warrants the equipment supplied against defects in design, materials and workmanship for a period of twelve (12) months after installation or twenty-four (24) months from date of manufacturing, whichever first occurs. The local ABB office or distributor may grant a warranty period different to the above and refer to local terms of liability as defined in the supply contract.

The manufacturer is not responsible for

- any costs resulting from a failure if the installation, commissioning, repair, alternation, or ambient conditions of the drive do not fulfil the requirements specified in the documentation delivered with the unit and other relevant documentation.
- units subjected to misuse, negligence or accident
- units comprised of materials provided or designs stipulated by the purchaser.

In no event shall the manufacturer, its suppliers or subcontractors be liable for special, indirect, incidental or consequential damages, losses or penalties.

This is the sole and exclusive warranty given by the manufacturer with respect to the equipment and is in lieu of and excludes all other warranties, express or implied, arising by operation of law or otherwise, including, but not limited to, any implied warranties of merchantability or fitness for a particular purpose.

If you have any questions concerning your ABB drive, please contact the local distributor or ABB office. The technical data, information and specifications are valid at the time of printing. The manufacturer reserves the right to modifications without prior notice.

Dimensional drawings

Dimensional drawings of the ACS800-01 are shown below. The dimensions are given in milllimetres and [inches].

Frame size R2 (IP 21, UL type 1)

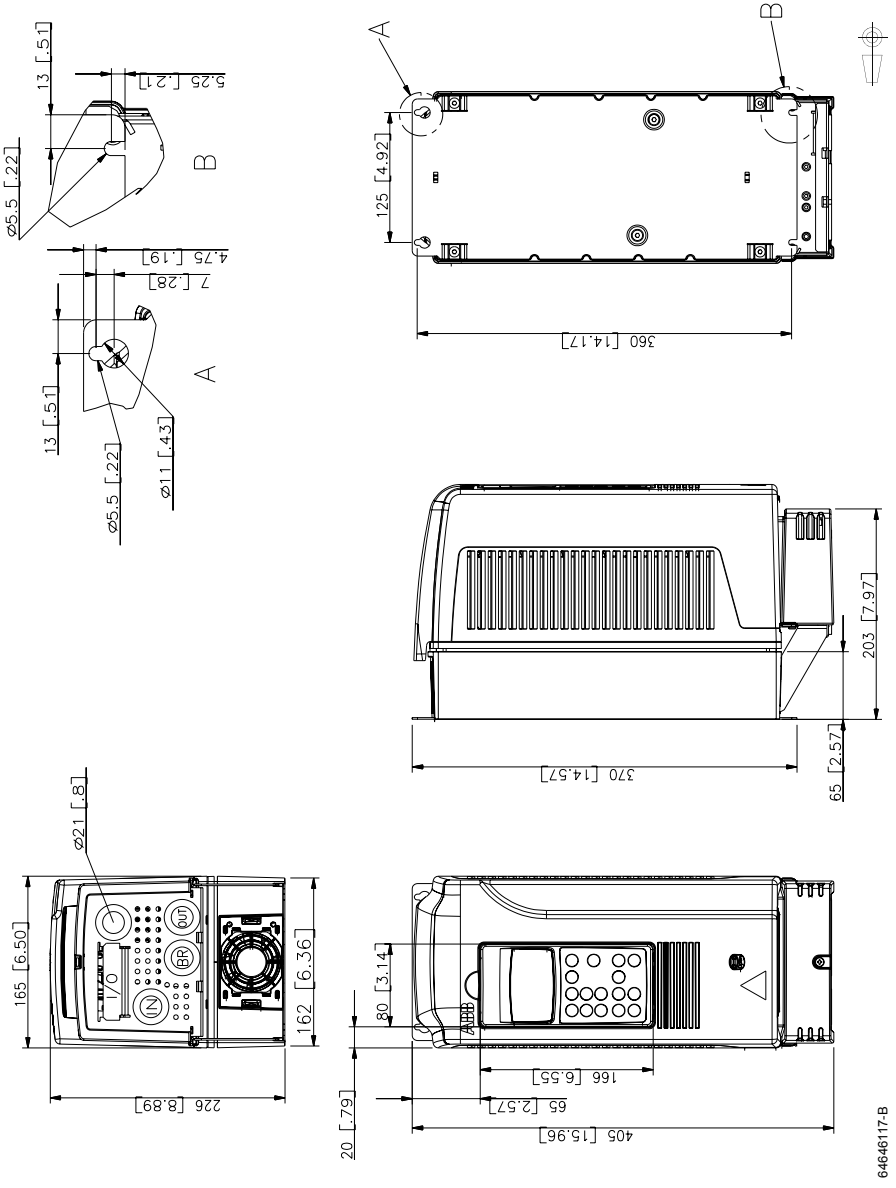

Frame size R2 (IP 55, UL type 12)

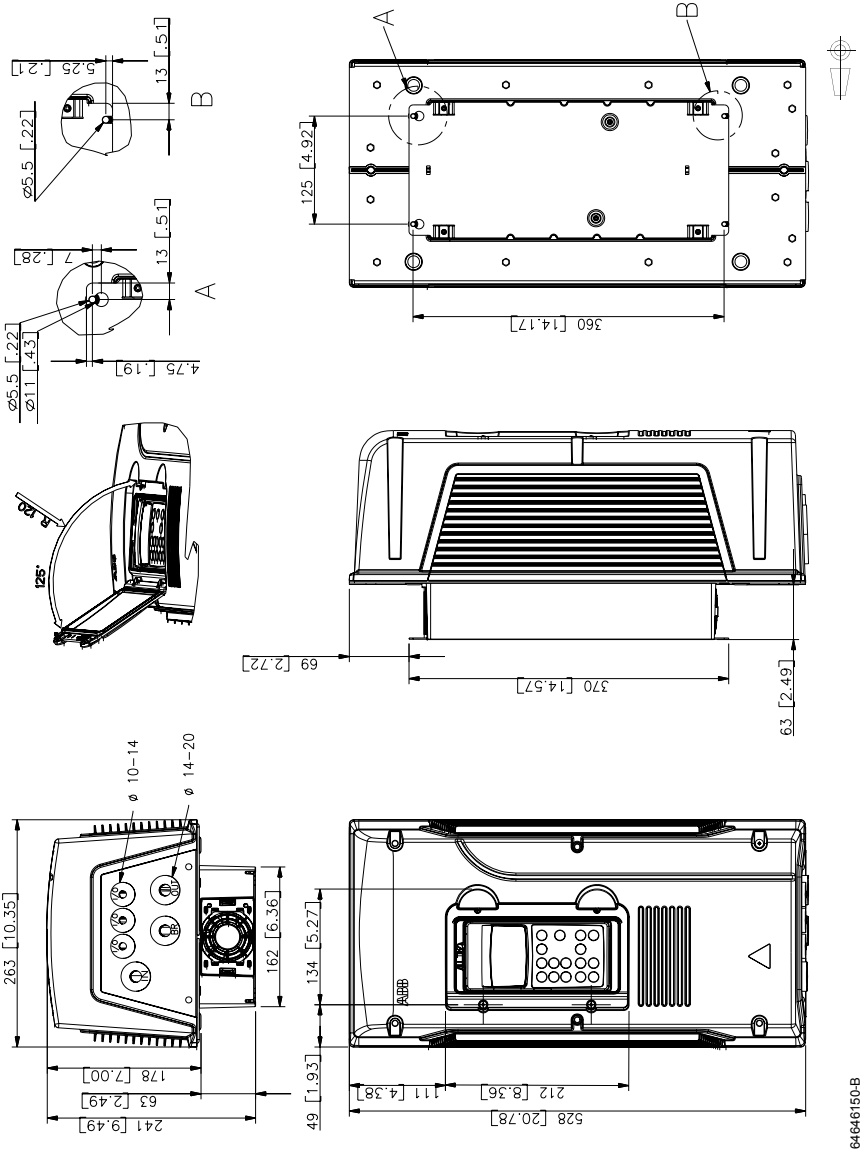

Frame size R3 (IP 21, UL type 1)

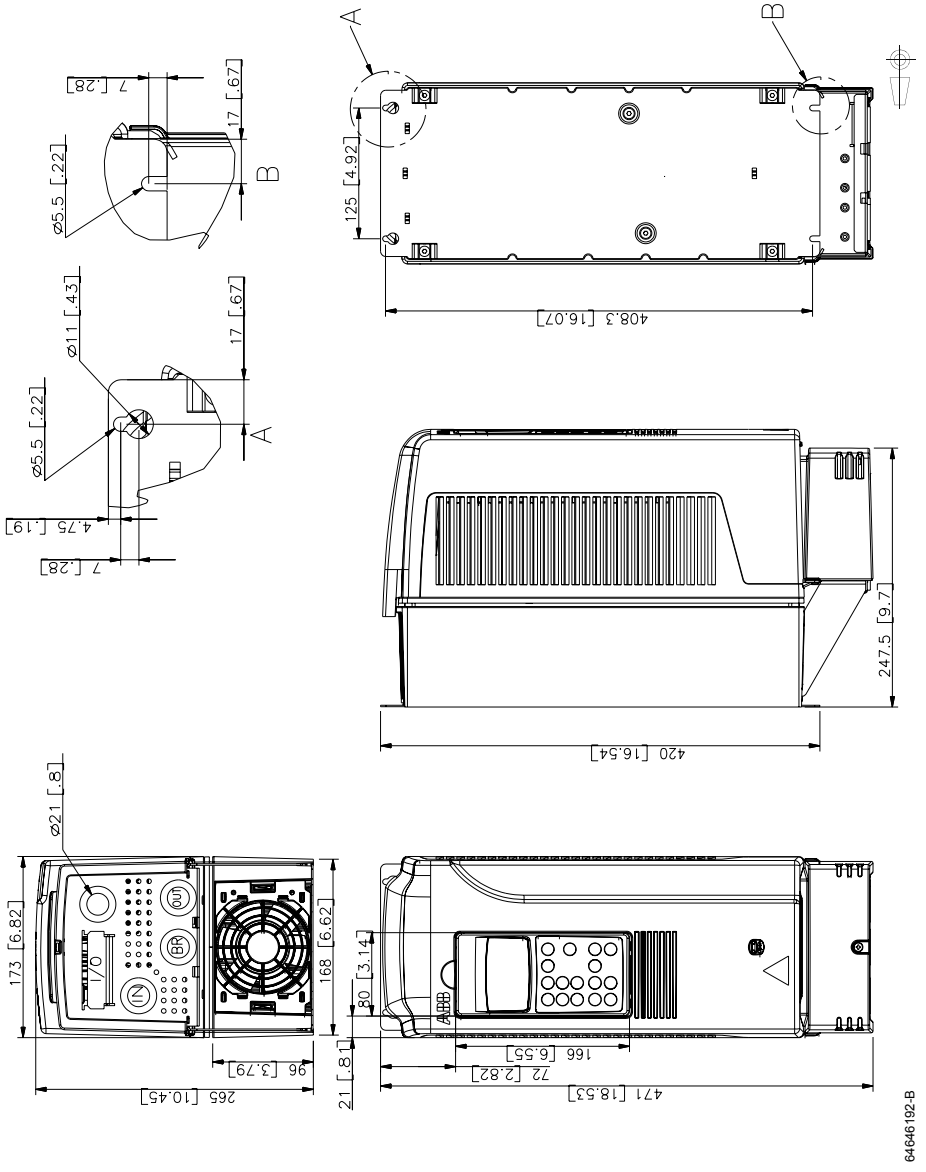

Frame size R3 (IP 55, UL type 12)

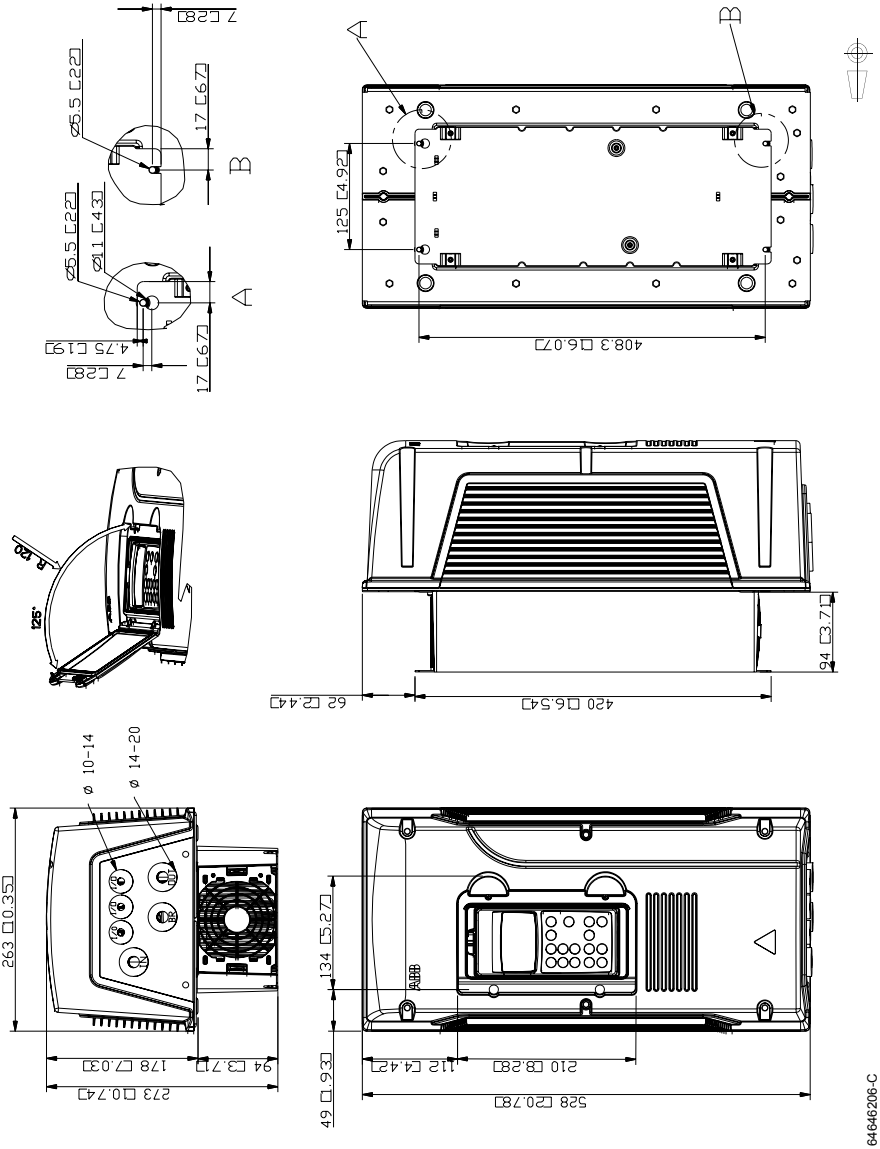

Frame size R4 (IP 21, UL type 1)

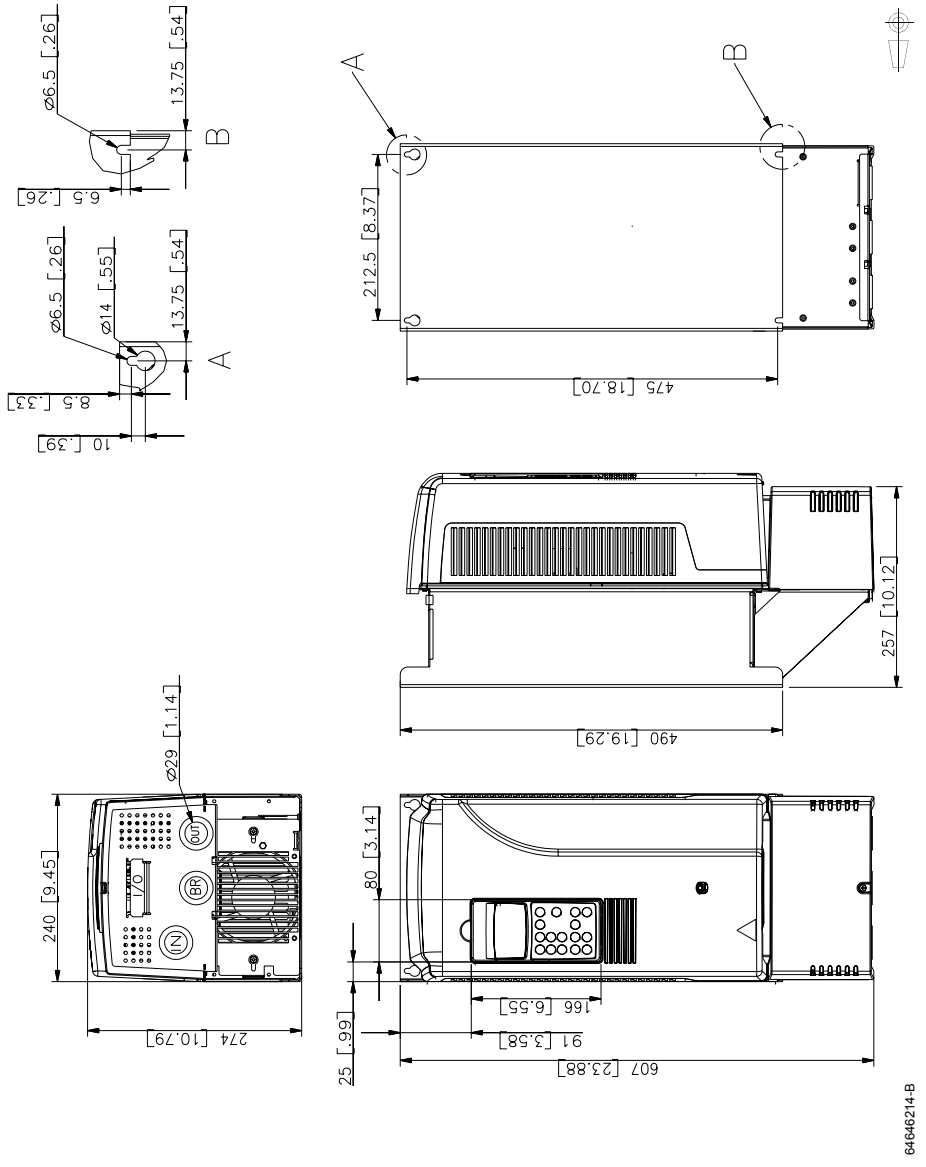

Frame size R4 (IP 55, UL type 12)

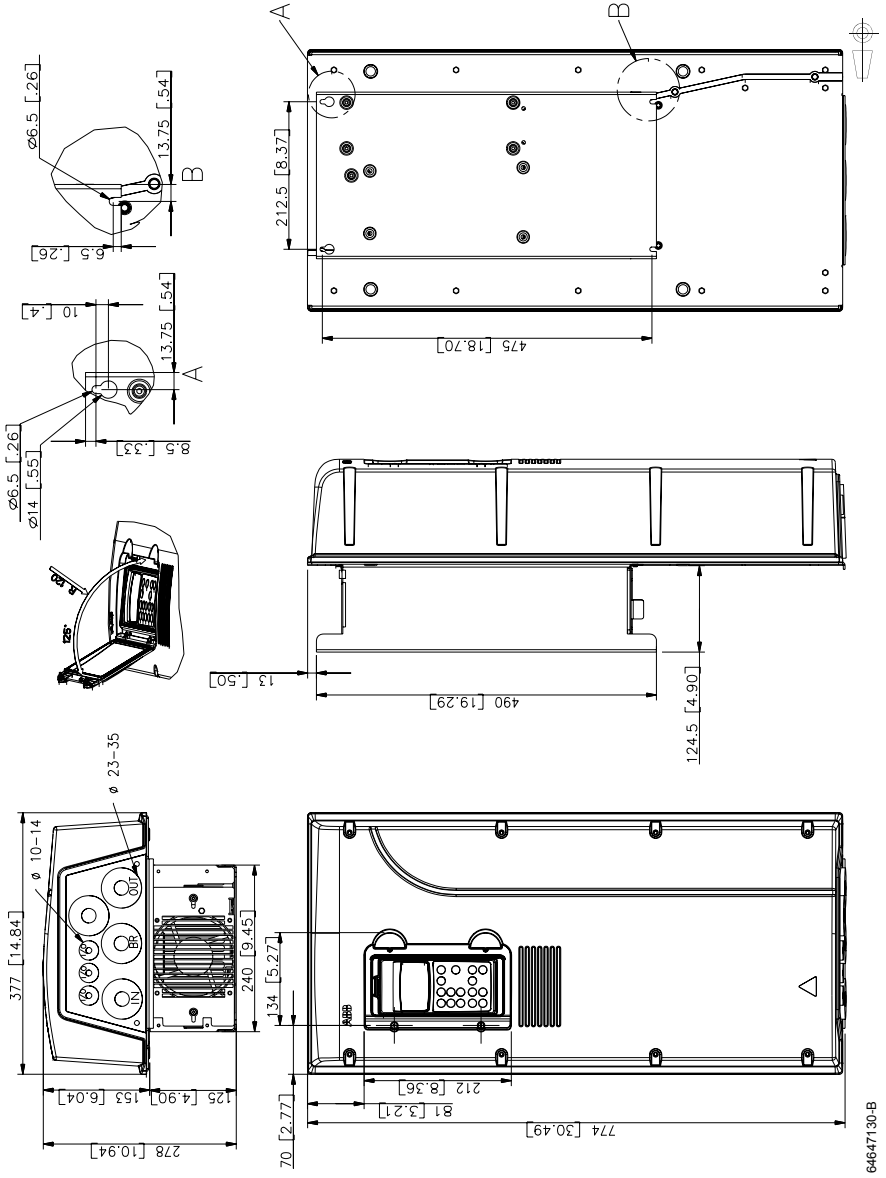

Frame size R5 (IP 21, UL type 1)

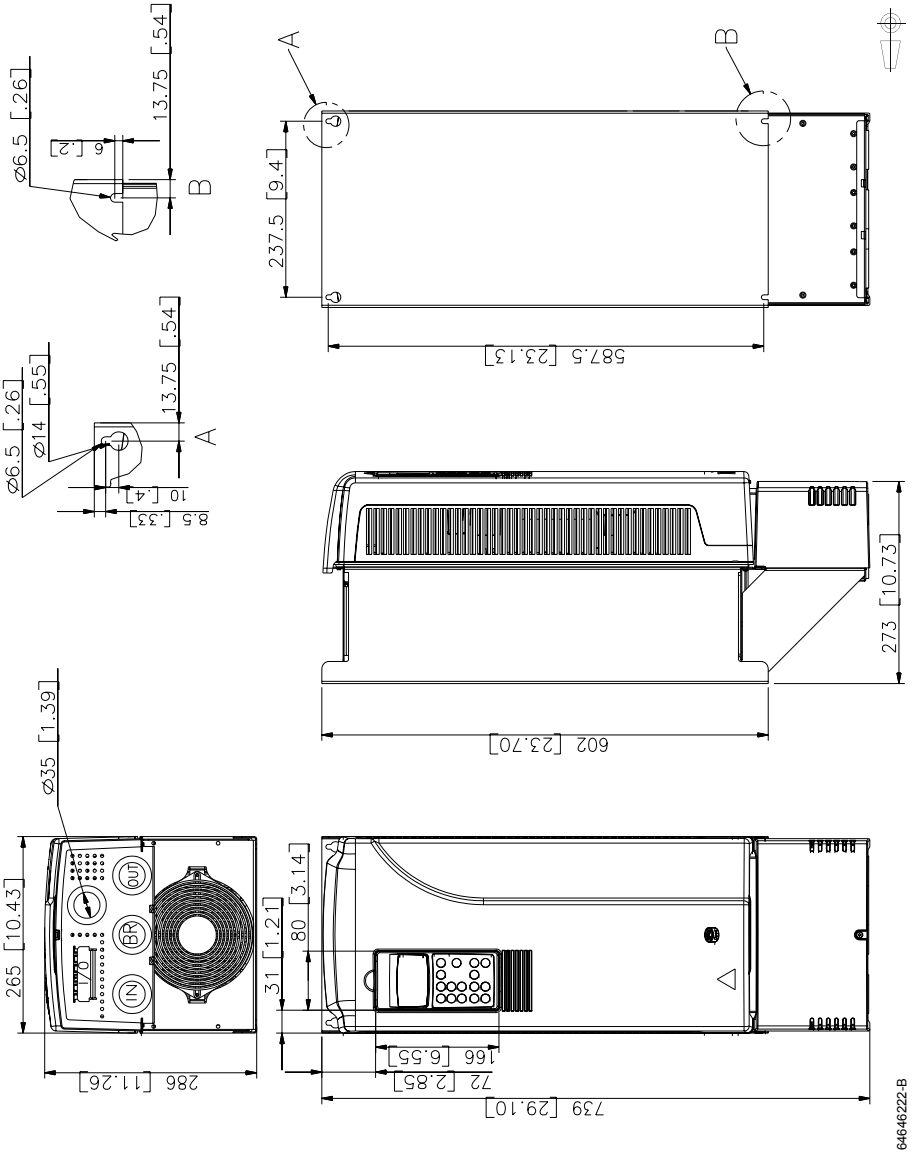

Frame size R5 (IP 55, UL type 12)

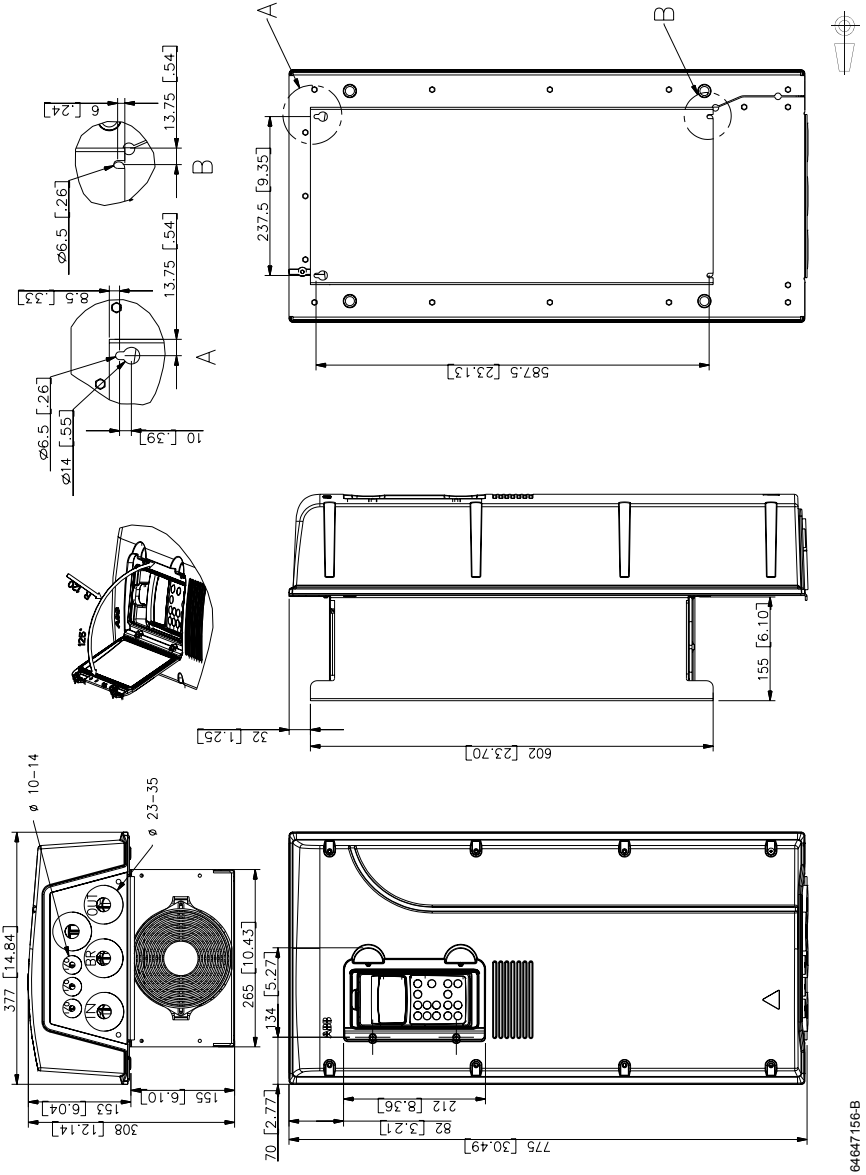

Frame size R6 (IP 21, UL type 1)

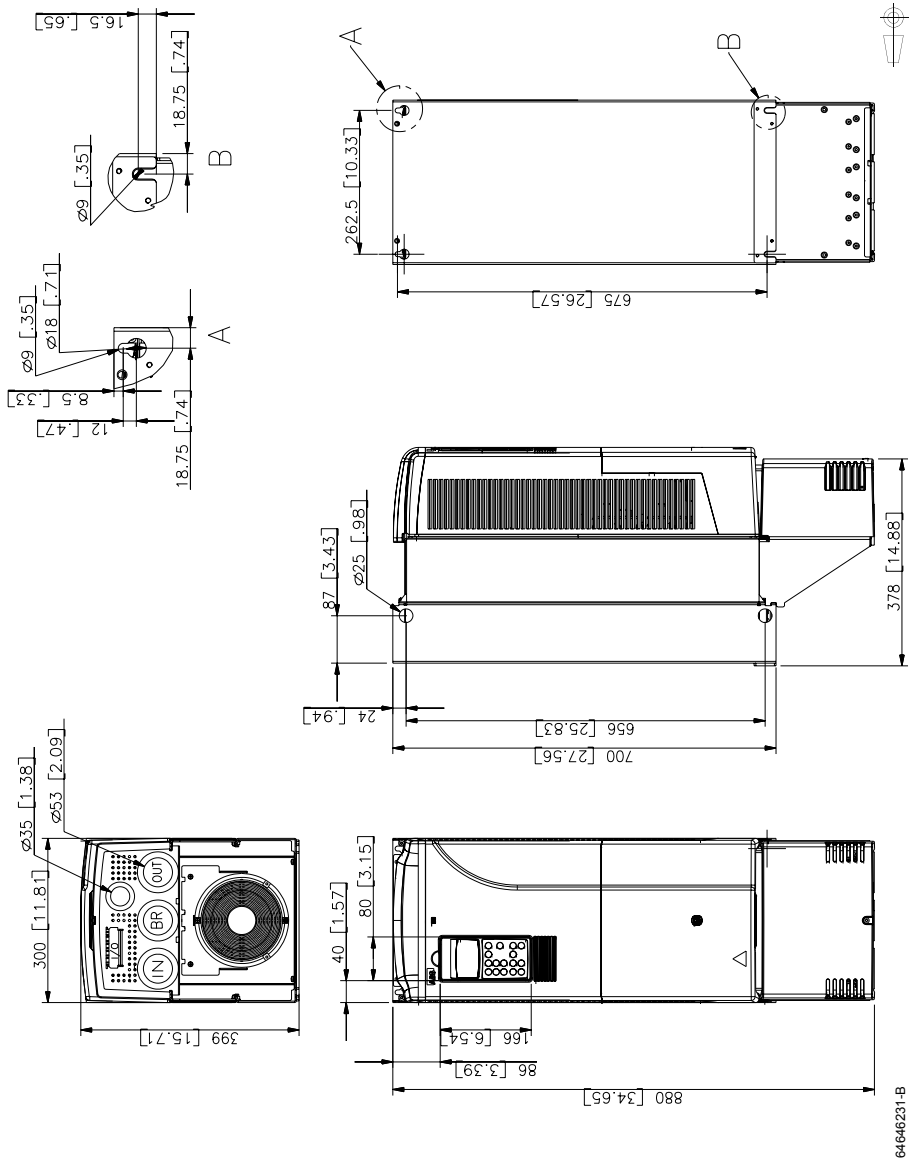

Frame size R6 (IP 21, UL type 1), -205-3 and -255-5 units

Note: Only measurements that differ from those of the standard *Frame size R6 (IP 21, UL type 1)* are given below.

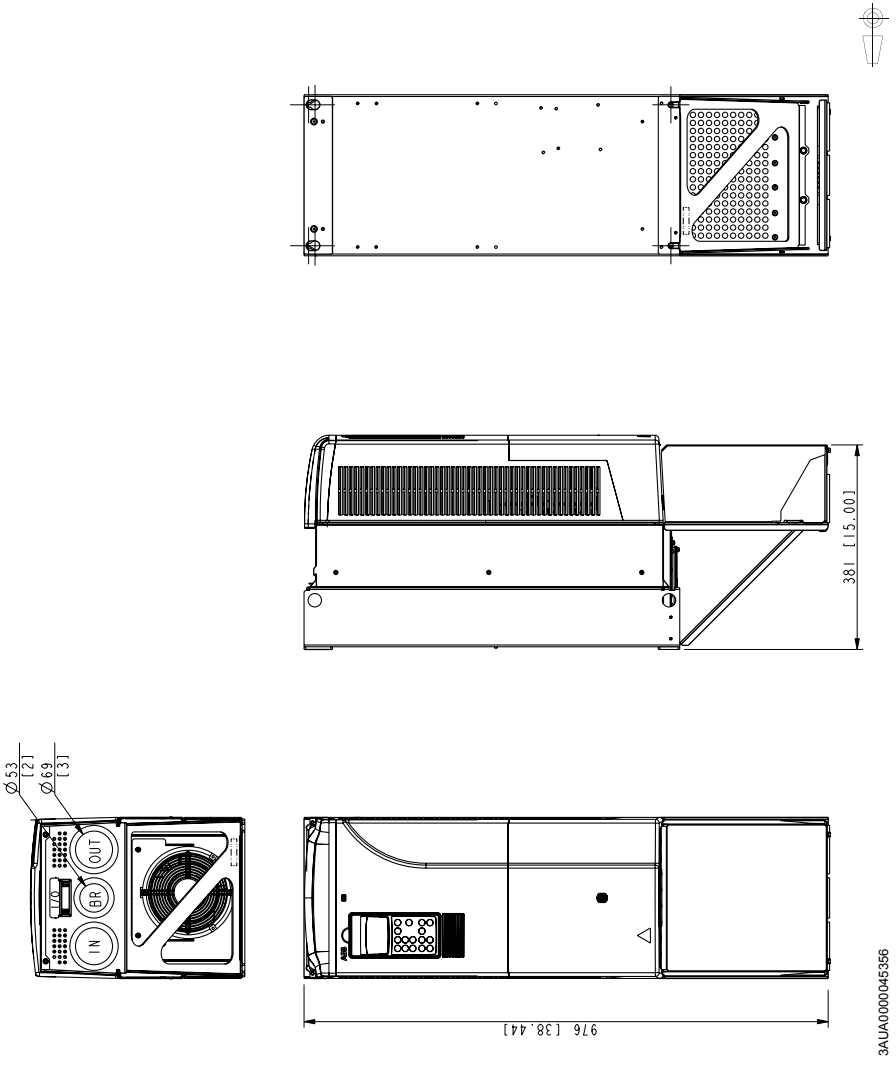

Frame size R6 (IP 55, UL type 12)

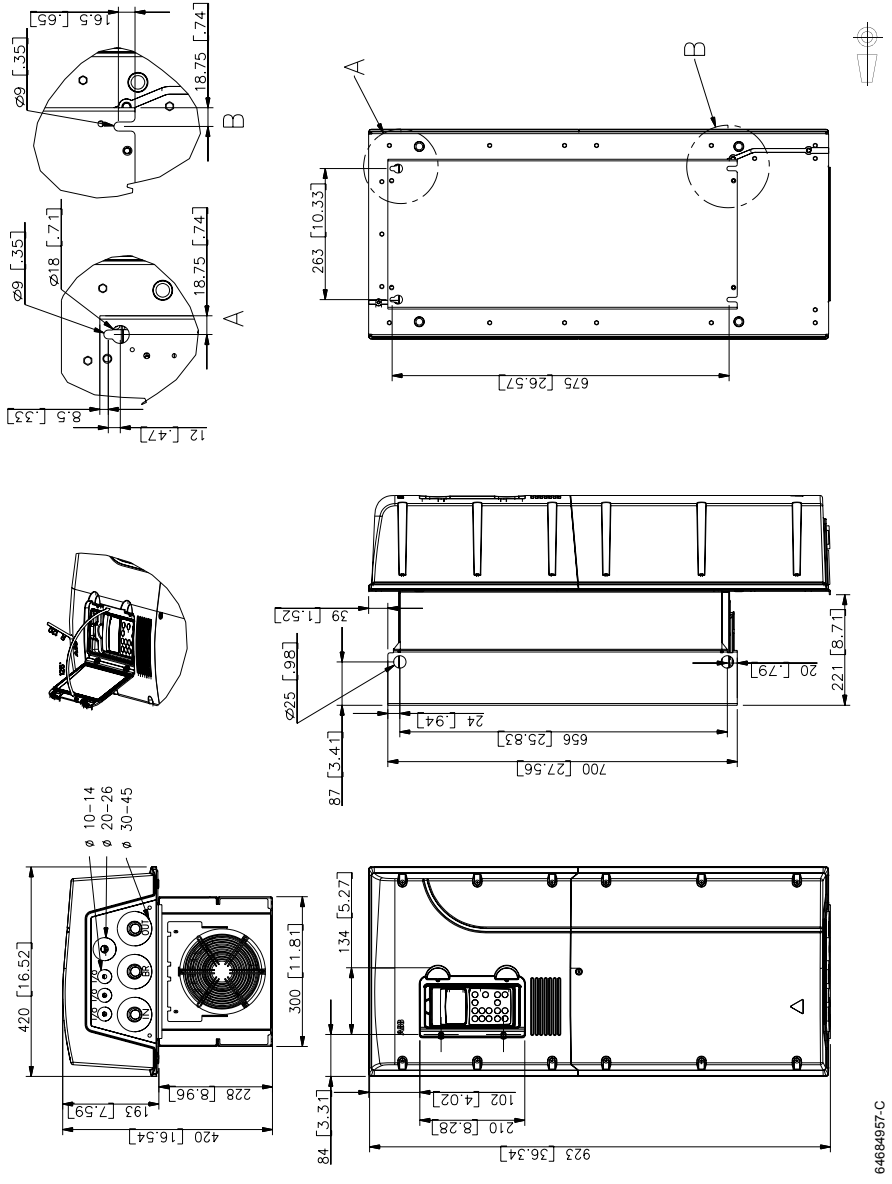

Frame size R6 (IP 55, UL type 12) -0205-3 and -0255-5 units

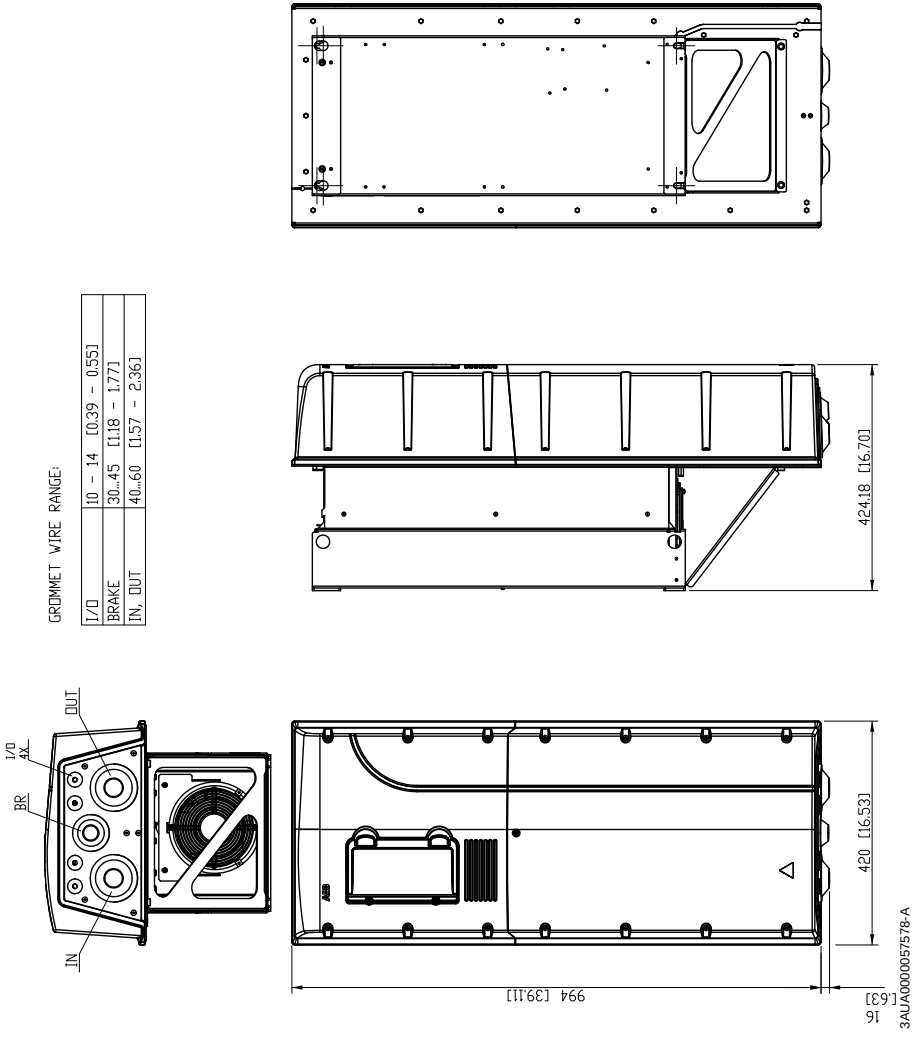

Dimensional drawings (USA)

Dimensional drawings of the ACS800-U1 are shown below. The dimensions are given in milllimetres and [inches].

Frame size R2 (UL type 1, IP 21)

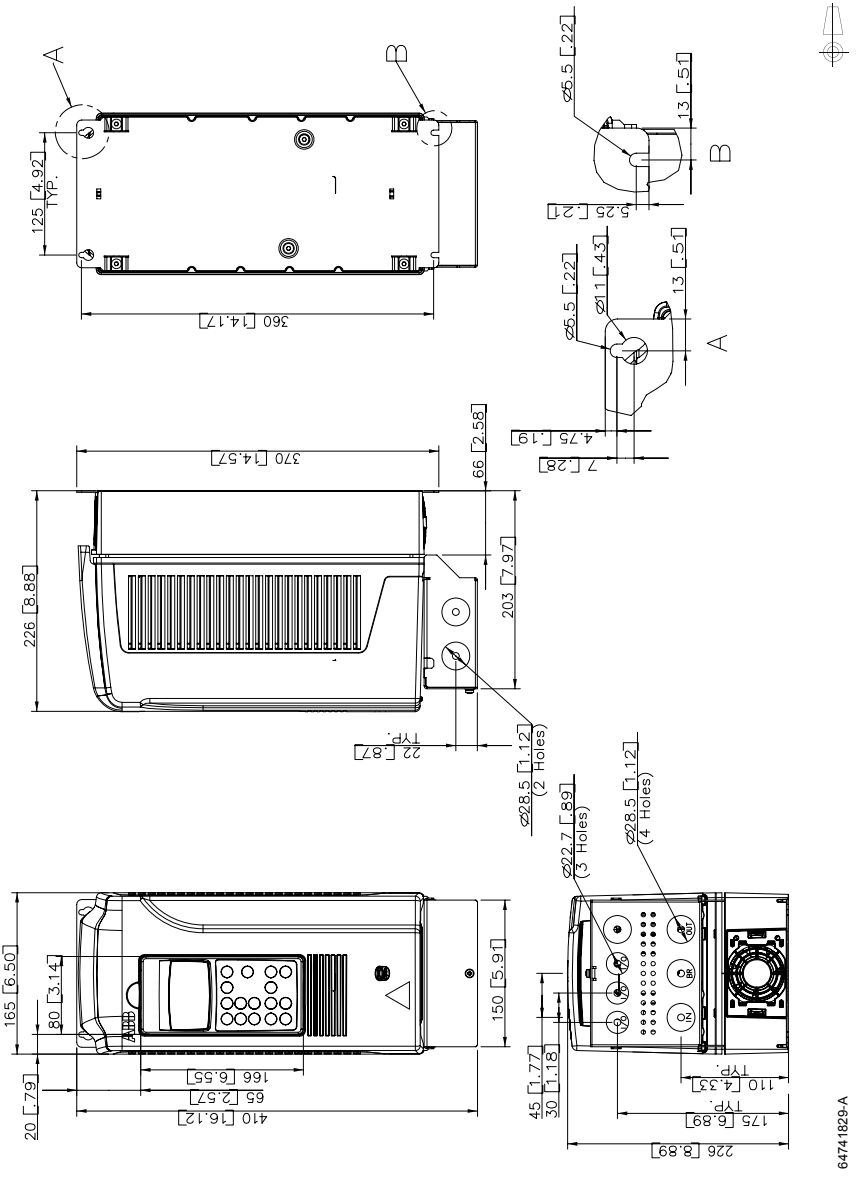

Frame size R2 (UL type 12, IP 55)

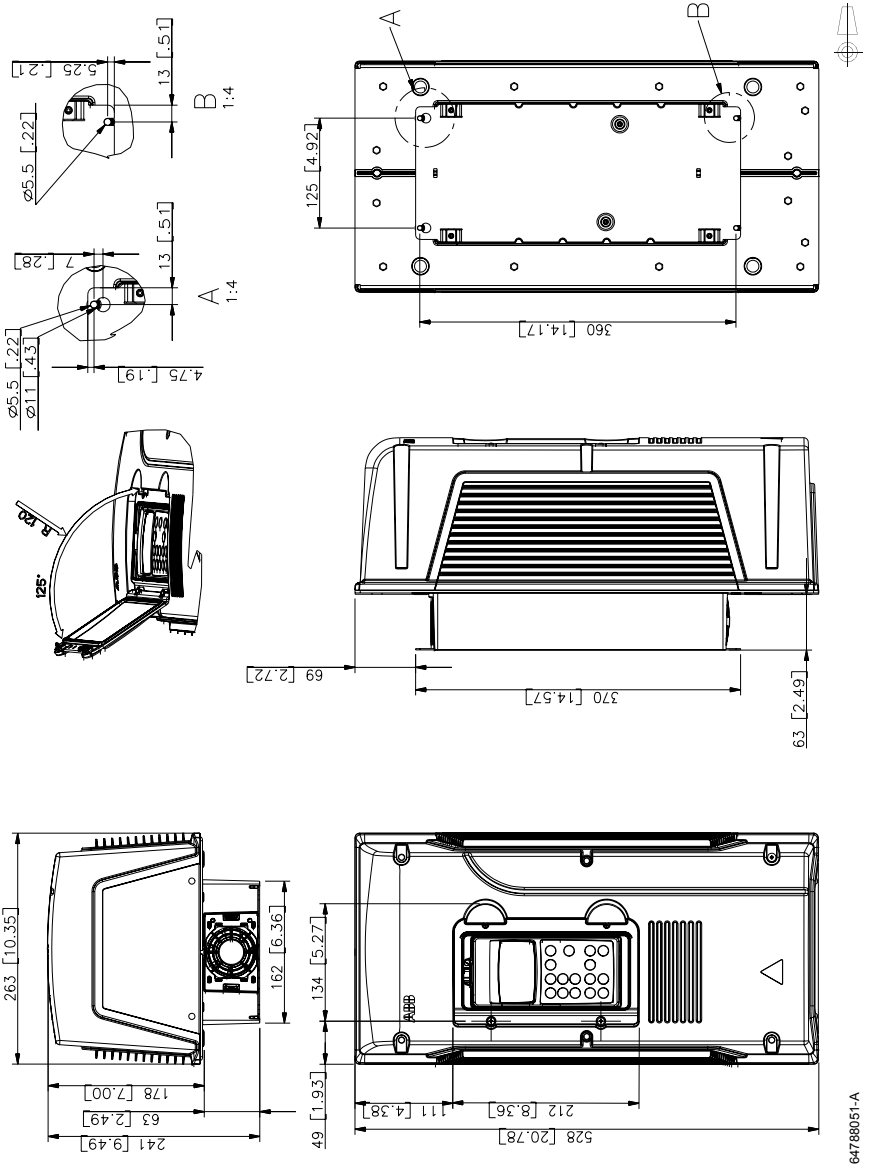

Frame size R3 (UL type 1, IP 21)

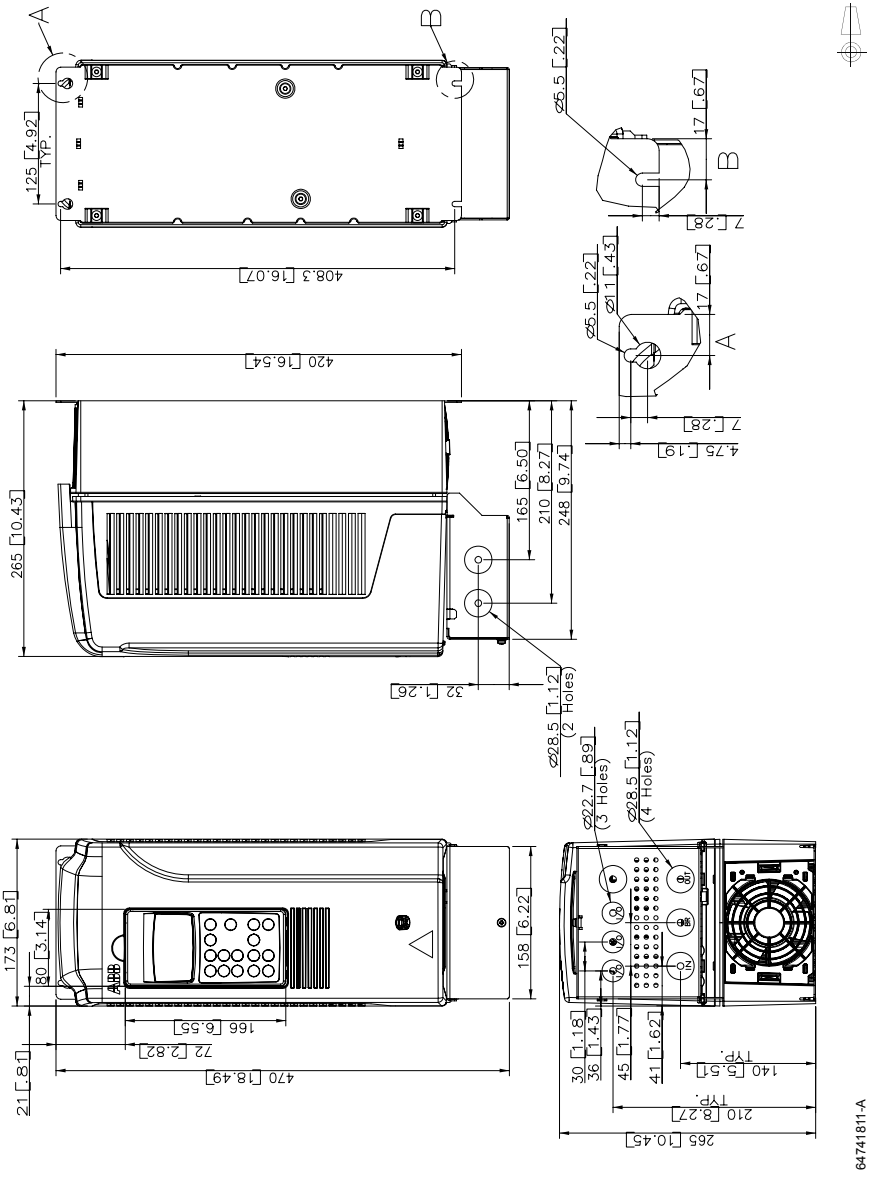

Frame size R3 (UL type 12, IP 55)

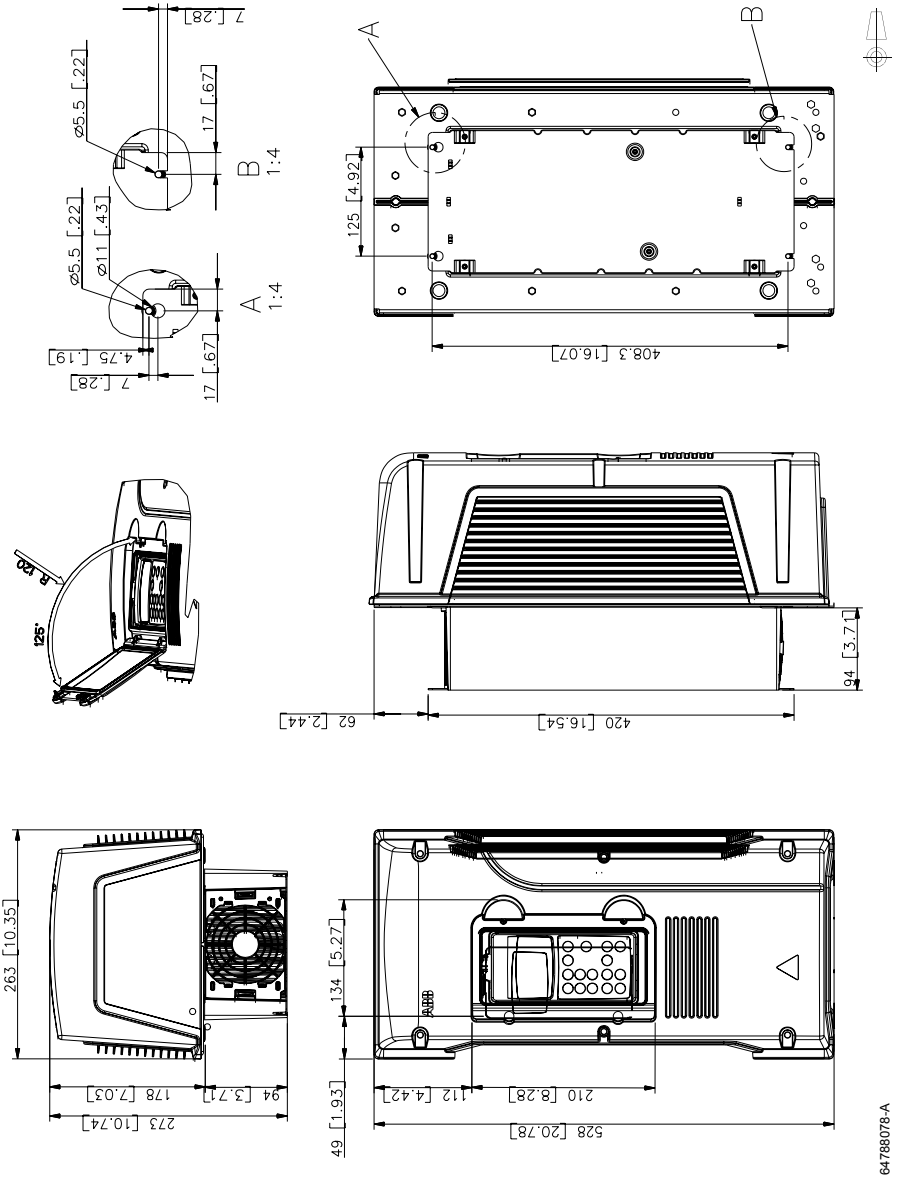

Frame size R4 (UL type 1, IP 21)

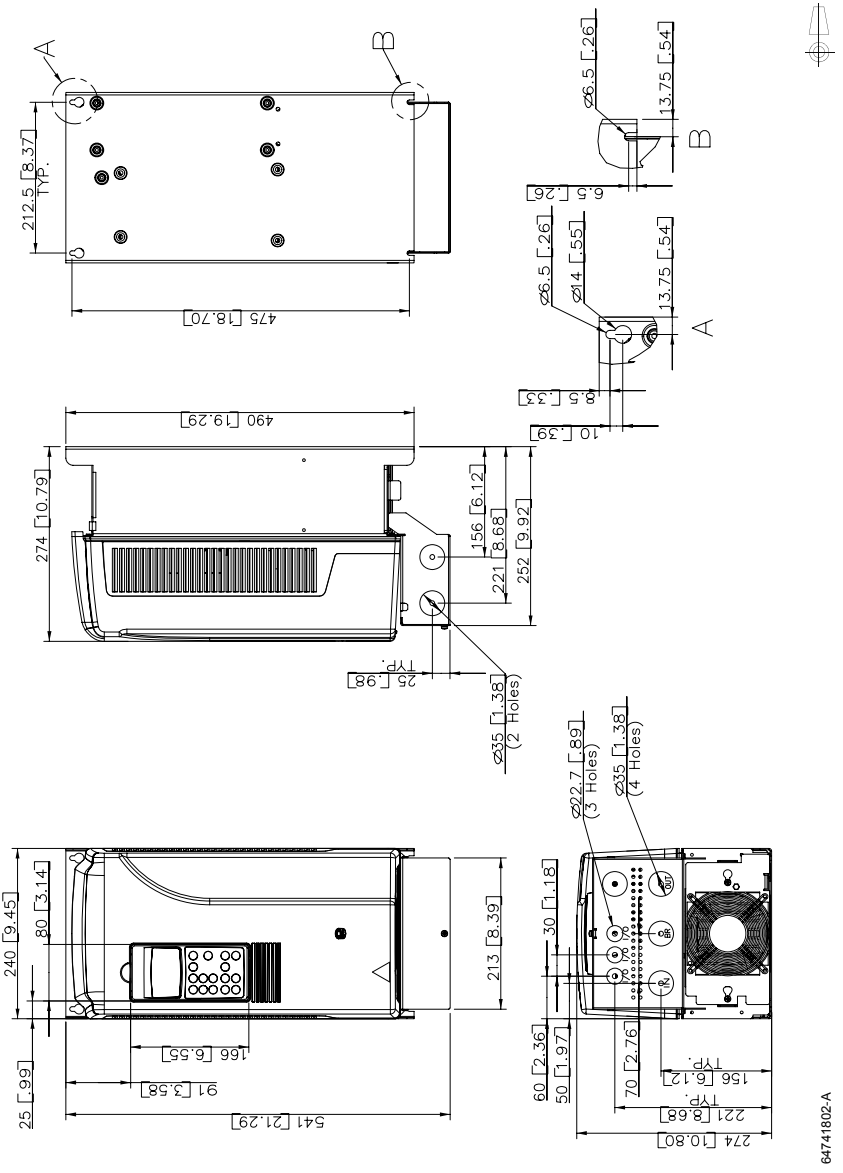

Frame size R4 (UL type 12, IP 55)

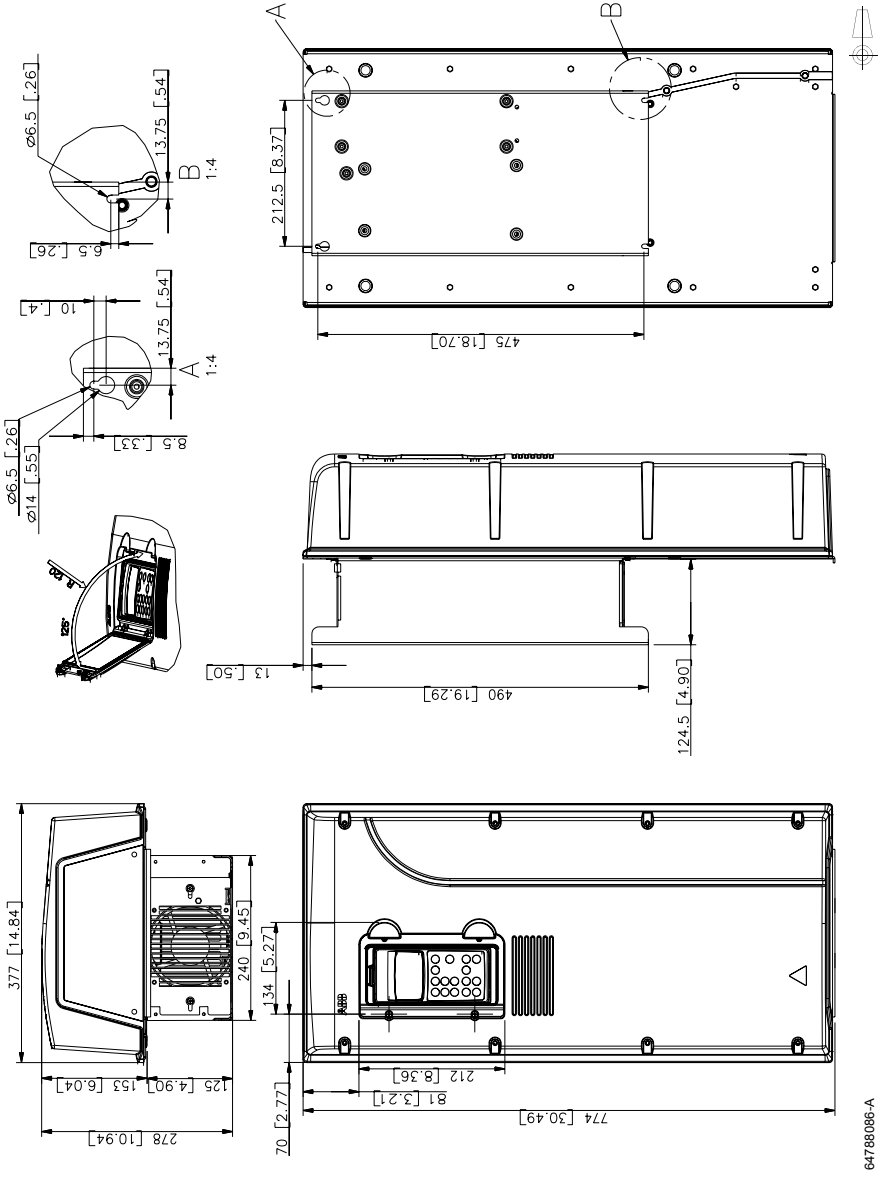

Frame size R5 (UL type 1, IP 21)

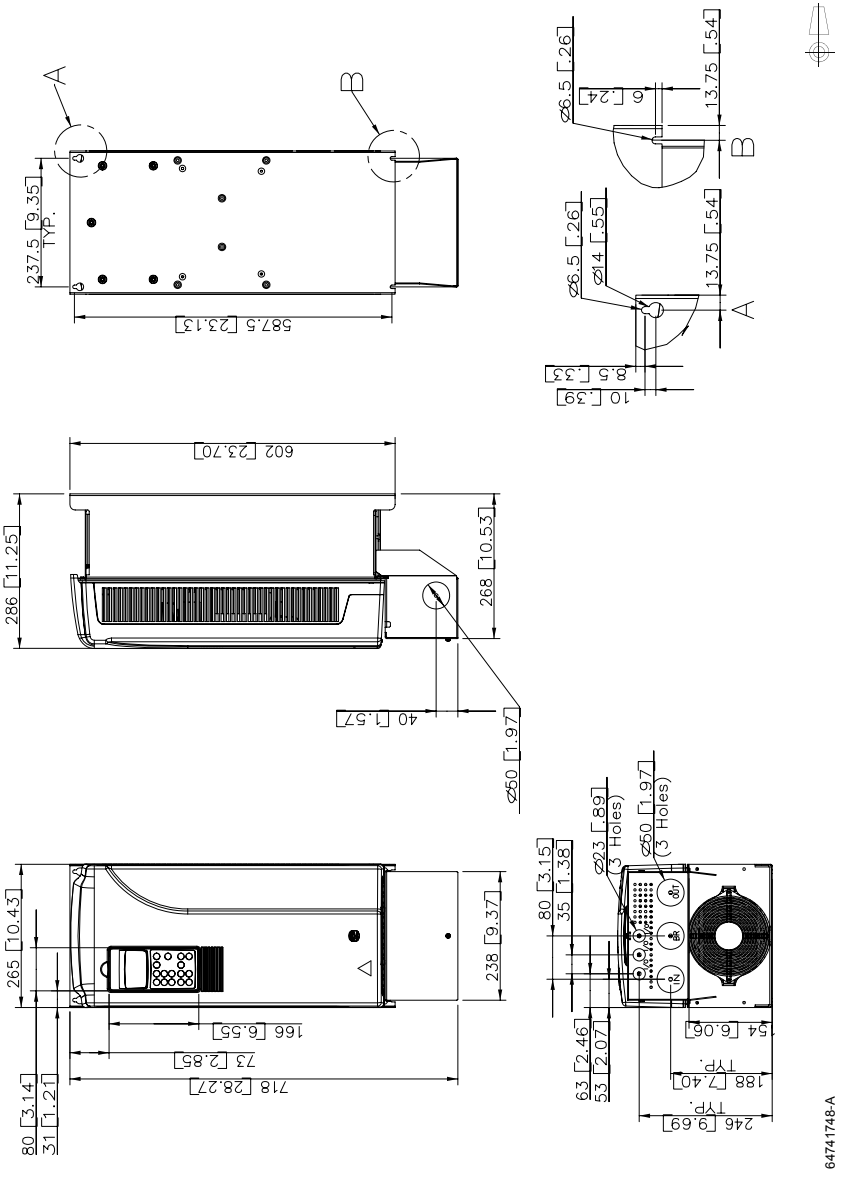

Frame size R5 (UL type 12, IP 55)

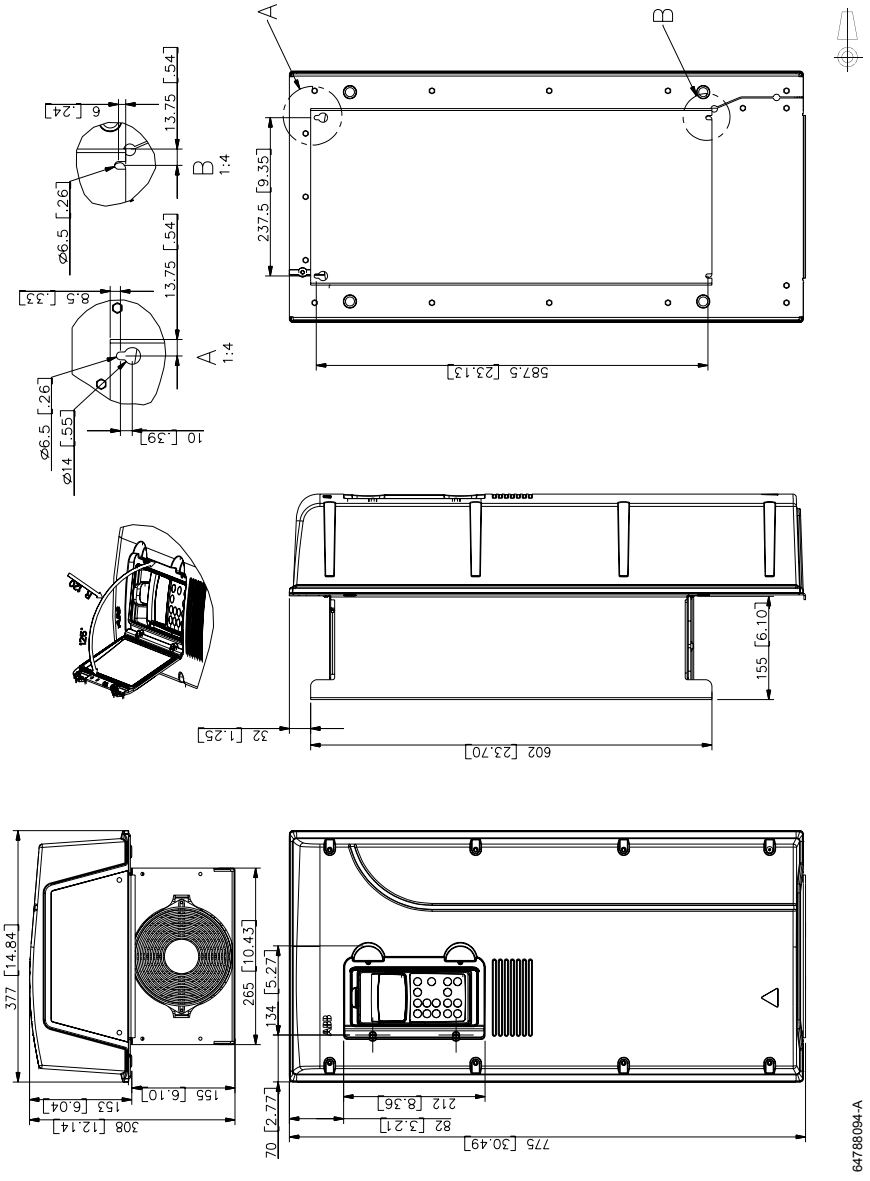

Frame size R6 (UL type 1, IP 21)

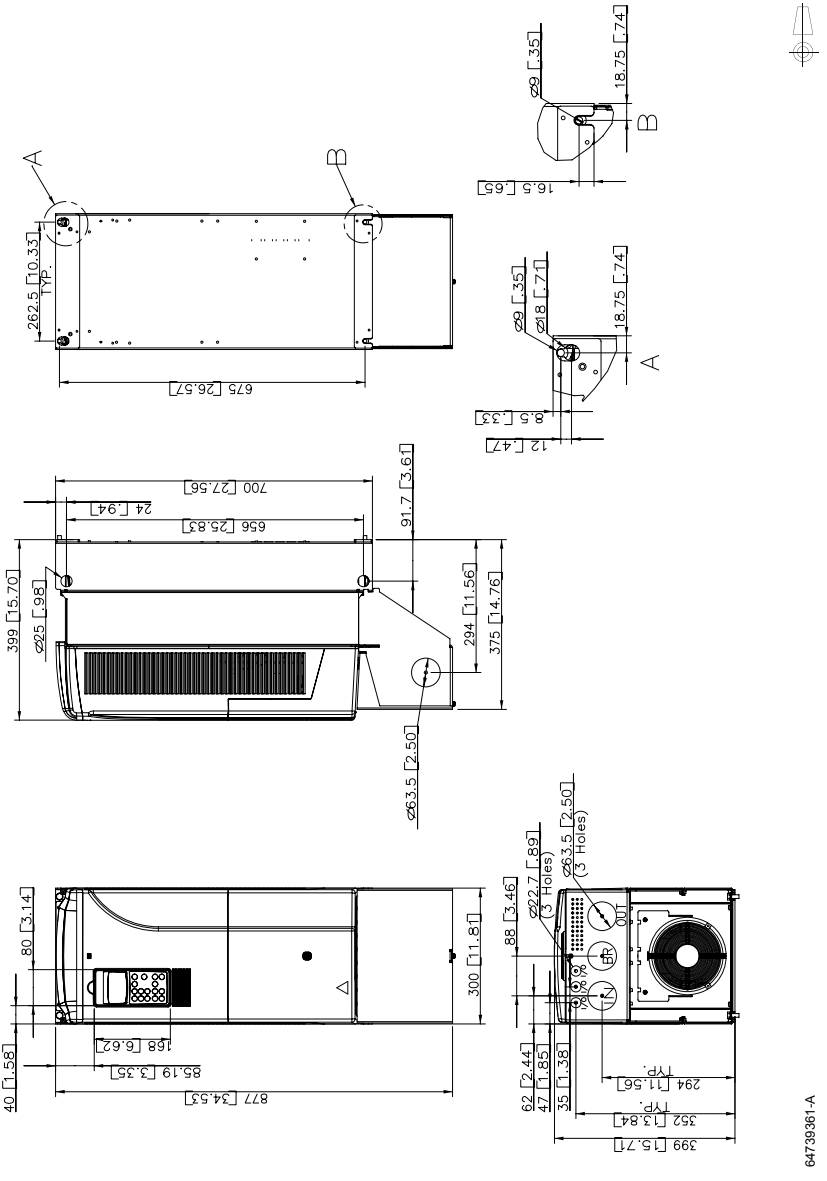

Frame size R6 (UL type 1, IP 21) -0205-3 and -0255-5 units

Note: Only measurements that differ from those of the standard *Frame size R6 (UL type 1, IP 21)* are given below.

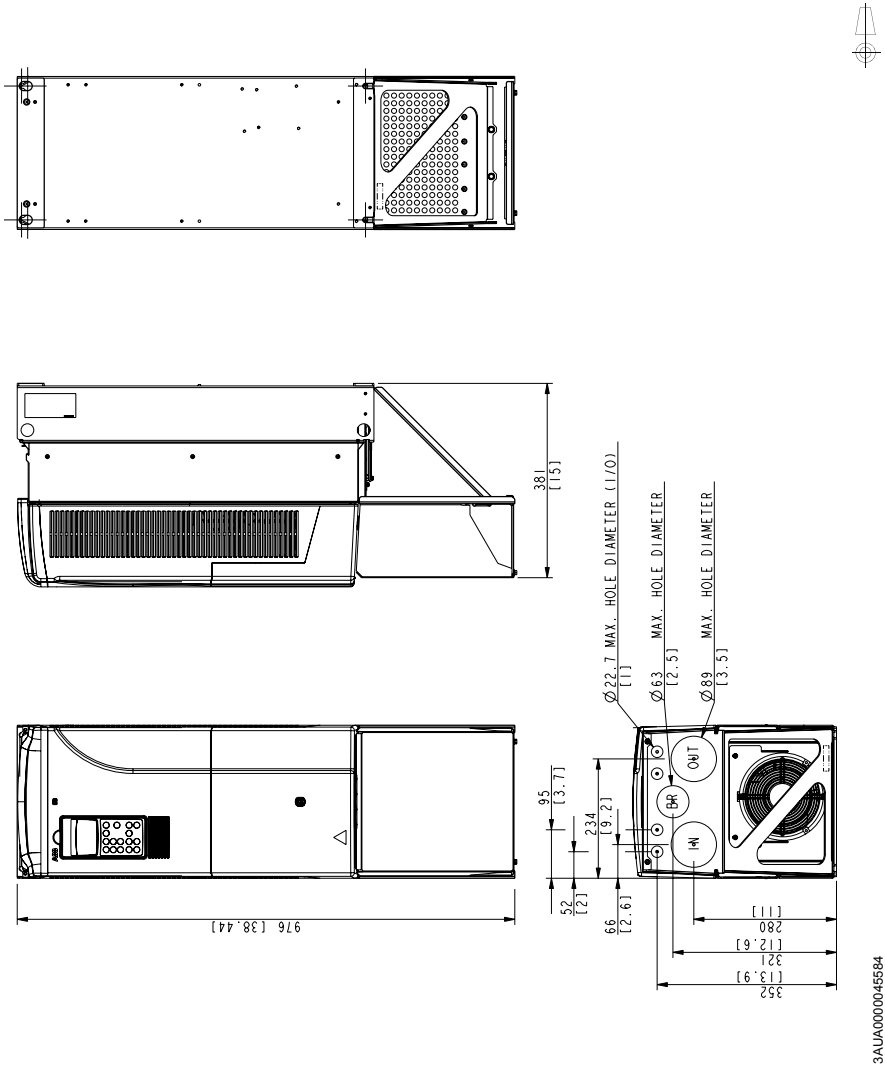

Frame size R6 (UL type 12, IP 55)

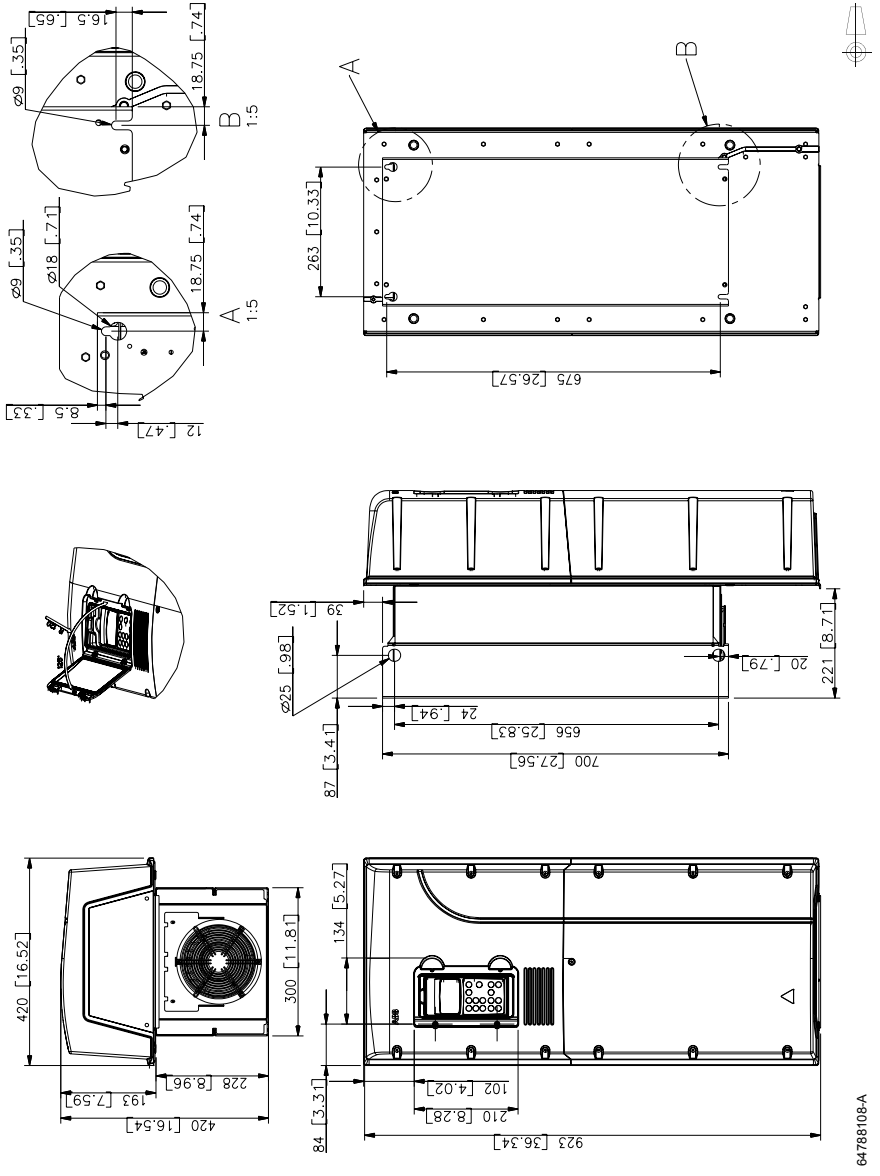

Frame size R6 (UL type 12, IP 55) -0205-3 and -0255-5 units

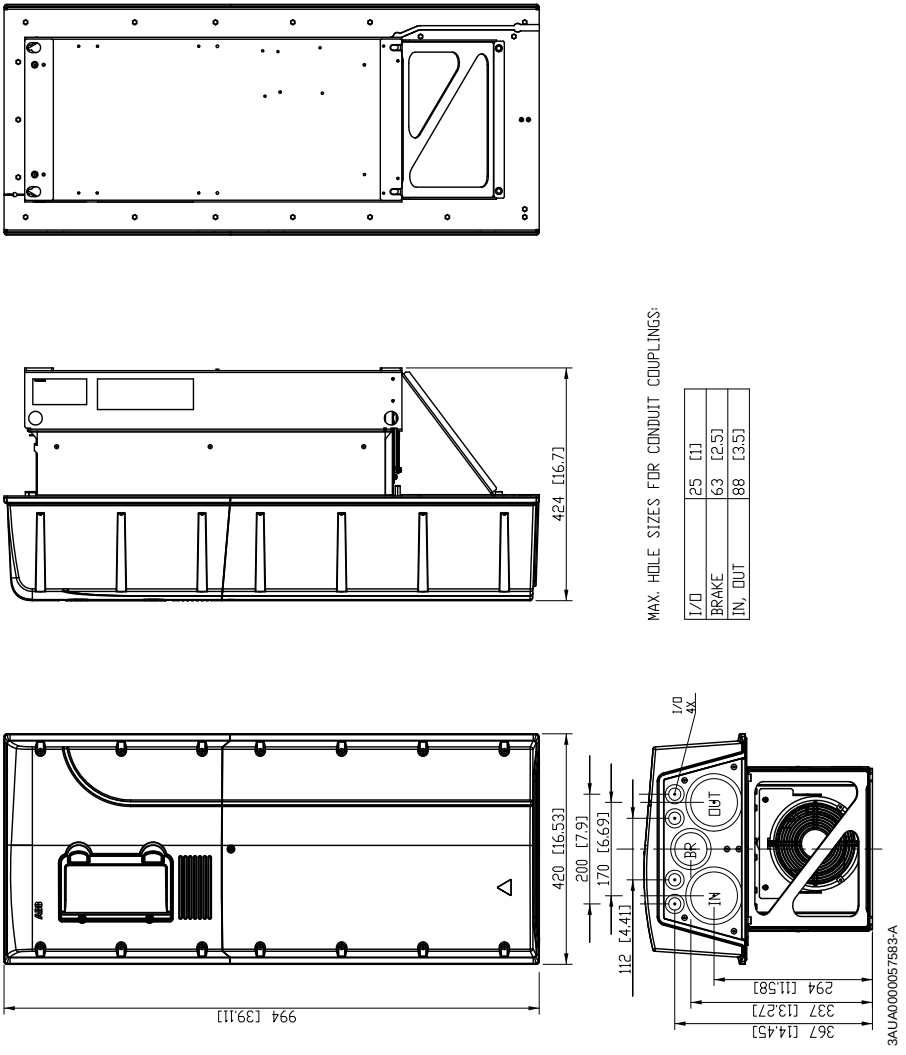

MAX. HOLE SIZES FOR CONDUIT COUPLINGS:

I/O	25 [1]
BRAKE	63 [2.5]
IN, OUT	88 [3.5]

Resistor braking

What this chapter contains

This chapter describes how to select, protect and wire brake choppers and resistors. The chapter also contains the technical data.

Availability of brake choppers and resistors for the ACS800

Frame R2 and R3 drives and 690 V units of frame size R4 have a built-in brake chopper as standard equipment. For other units, brake choppers are optionally available as built-in units, indicated in the type code by +D150.

Resistors are available as add-on kits.

Selecting the correct drive/chopper/resistor combination

1. Calculate the maximum power (P_{max}) generated by the motor during braking.
2. Select a suitable drive / brake chopper / brake resistor combination for the application according to the following tables (take account of other factors in the drive selection also). The following condition must be met:

   $$P_{br} \geq P_{max}$$

   where

   P_{br} denotes P_{br5}, P_{br10}, P_{br30}, P_{br60}, or P_{brcont} depending on the duty cycle.

3. Check the resistor selection. The energy generated by the motor during a 400-second period must not exceed the resistor heat dissipation capacity E_R.

   If the E_R value is not sufficient, it is possible to use a four-resistor assembly in which two standard resistors are connected in parallel, two in series. The E_R value of the four-resistor assembly is four times the value specified for the standard resistor.

Note: A resistor other than the standard resistor can be used provided that:

- its resistance is not lower than the resistance of the standard resistor.

WARNING! Never use a brake resistor with a resistance below the value specified for the particular drive / brake chopper / resistor combination. The drive and the chopper are not able to handle the overcurrent caused by the low resistance.

- the resistance does not restrict the braking capacity needed, i.e.,

$$P_{max} < \frac{U_{DC}^2}{R}$$

where

P_{max}	maximum power generated by the motor during braking
U_{DC}	voltage over the resistor during braking, e.g., 1.35 · 1.2 · 415 V DC (when supply voltage is 380 to 415 V AC), 1.35 · 1.2 · 500 V DC. (when supply voltage is 440 to 500 V AC) or 1.35 · 1.2 · 690 V DC (when supply voltage is 525 to 690 V AC).
R	resistor resistance (ohm)

- the heat dissipation capacity (E_R) is sufficient for the application (see step 3 above).

Optional brake chopper and resistor(s) for the ACS800-01/U1

The nominal ratings for dimensioning the brake resistors for the ACS800-01 and ACS800-U1 are given below at an ambient temperature of 40 °C (104 °F).

ACS800-01 type **ACS800-U1 type**	**Braking power of the chopper and the drive**	**Brake resistor(s)**			
	P_{brcont} (kW)	**Type**	**R (ohm)**	**E_R (kJ)**	**P_{Rcont} (kW)**
230 V units					
-0001-2	0.55	SACE08RE44	44	210	1
-0002-2	0.8	SACE08RE44	44	210	1
-0003-2	1.1	SACE08RE44	44	210	1
-0004-2	1.5	SACE08RE44	44	210	1
-0005-2	2.2	SACE15RE22	22	420	2
-0006-2	3.0	SACE15RE22	22	420	2
-0009-2	4.0	SACE15RE22	22	420	2
-0011-2	5.5	SACE15RE13	13	435	2
-0016-2	11	SAFUR90F575	8	1800	4.5
-0020-2	17	SAFUR90F575	8	1800	4.5
-0025-2	23	SAFUR80F500	6	2400	6
-0030-2	28	SAFUR125F500	4	3600	9
-0040-2	33	SAFUR125F500	4	3600	9
-0050-2	45	2xSAFUR125F500	2	7200	18
-0060-2	56	2xSAFUR125F500	2	7200	18
-0070-2	68	2xSAFUR125F500	2	7200	18

ACS800-01 type ACS800-U1 type	Braking power of the chopper and the drive	Brake resistor(s)			
	P_{brcont} (kW)	Type	R (ohm)	E_R (kJ)	P_{Rcont} (kW)
400 V units					
-0003-3	1.1	SACE08RE44	44	210	1
-0004-3	1.5	SACE08RE44	44	210	1
-0005-3	2.2	SACE08RE44	44	210	1
-0006-3	3.0	SACE08RE44	44	210	1
-0009-3	4.0	SACE08RE44	44	210	1
-0011-3	5.5	SACE15RE22	22	420	2
-0016-3	7.5	SACE15RE22	22	420	2
-0020-3	11	SACE15RE22	22	420	2
-0025-3	23	SACE15RE13	13	435	2
-0030-3	28	SACE15RE13	13	435	2
-0040-3	33	SAFUR90F575	8	1800	4.5
-0050-3	45	SAFUR90F575	8	1800	4.5
-0060-3	56	SAFUR90F575	8	1800	4.5
-0075-3	70	SAFUR80F500	6	2400	6
-0070-3	68	SAFUR80F500	6	2400	6
-0100-3	83	SAFUR125F500	4	3600	9
-0120-3	113	SAFUR125F500	4	3600	9
-0135-3	132	SAFUR200F500	2.7	5400	13.5
-0165-3	132	SAFUR200F500	2.7	5400	13.5
-0205-3	160	SAFUR200F500	2.7	5400	13.5
500 V units					
-0004-5	1.5	SACE08RE44	44	210	1
-0005-5	2.2	SACE08RE44	44	210	1
-0006-5	3.0	SACE08RE44	44	210	1
-0009-5	4.0	SACE08RE44	44	210	1
-0011-5	5.5	SACE08RE44	44	210	1
-0016-5	7.5	SACE15RE22	22	420	2
-0020-5	11	SACE15RE22	22	420	2
-0025-5	15	SACE15RE22	22	420	2
-0030-5	28	SACE15RE13	13	435	2
-0040-5	33	SACE15RE13	13	435	2
-0050-5	45	SAFUR90F575	8	1800	4.5
-0060-5	56	SAFUR90F575	8	1800	4.5
-0070-5	68	SAFUR90F575	8	1800	4.5
-0105-5	83	SAFUR80F500	6	2400	6
-0100-5	83	SAFUR125F500	4	3600	9
-0120-5	113	SAFUR125F500	4	3600	9
-0140-5	135	SAFUR125F500	4	3600	9
-0165-5	160	SAFUR125F500	4	3600	9
-0205-5	160	SAFUR125F500	4	3600	9
-0255-5	200	SAFUR200F500	2.7	5400	13.5

ACS800-01 type ACS800-U1 type	Braking power of the chopper and the drive	Brake resistor(s)			
	P_{brcont} (kW)	Type	R (ohm)	E_R (kJ)	P_{Rcont} (kW)
690 V units					
-0011-7	8	SACE08RE44	44	210	1
-0016-7	11	SACE08RE44	44	210	1
-0020-7	16	SACE08RE44	44	210	1
-0025-7	22	SACE08RE44	44	210	1
-0030-7	28	SACE15RE22	22	420	2
-0040-7	22/33 [1)]	SACE15RE22	22	420	2
-0050-7	45	SACE15RE13	13	435	2
-0060-7	56	SACE15RE13	13	435	2
-0070-7	68	SAFUR90F575	8	1800	4.5
-0100-7	83	SAFUR90F575	8	1800	4.5
-0120-7	113	SAFUR80F500	6	2400	6
-0145-7	160	SAFUR80F500	6	2400	6
-0175-7	160	SAFUR80F500	6	2400	6
-0205-7	160	SAFUR80F500	6	2400	6

PDM code 00096931-J

P_{brcont} The drive and the chopper will withstand this continuous braking power. The braking is considered continuous if the braking time exceeds 30 s.
Note: Check that the braking energy transmitted to the specified resistor(s) in 400 seconds does not exceed E_R.

R Resistance value for the listed resistor assembly. **Note:** This is also the minimum allowed resistance for the brake resistor.

E_R Short energy pulse that the resistor assembly withstands every 400 seconds. This energy will heat the resistor element from 40 °C (104 °F) to the maximum allowable temperature.

P_{Rcont} Continuous power (heat) dissipation of the resistor when placed correctly. Energy E_R dissipates in 400 seconds.

1) 22 kW with standard 22 ohm resistor and 33 kW with 32…37 ohm resistor

All braking resistors must be installed outside the converter module. The SACE brake resistors are built in an IP 21 metal housing. The SAFUR brake resistors are built in an IP 00 metal frame. **Note:** The SACE and SAFUR resistors are not UL listed

Resistor installation and wiring

All resistors must be installed outside the drive module in a place where they will cool.

WARNING! The materials near the brake resistor must be non-flammable. The surface temperature of the resistor is high. Air flowing from the resistor is of hundreds of degrees Celsius. Protect the resistor against contact.

Use the cable type used for drive input cabling (refer to chapter *Technical data)* to ensure the input fuses will also protect the resistor cable. Alternatively, two-conductor shielded cable with the same cross-sectional area can be used. The maximum length of the resistor cable(s) is 10 m (33 ft). For the connections, see the power connection diagram of the drive.

Protection of frame sizes R2 to R5 (ACS800-01/U1)

It is highly recommended to equip the drive with a main contactor for safety reasons. Wire the contactor so that it opens in case the resistor overheats. This is essential for safety since the drive will not otherwise be able to interrupt the main supply if the chopper remains conductive in a fault situation.

Below is a simple example wiring diagram.

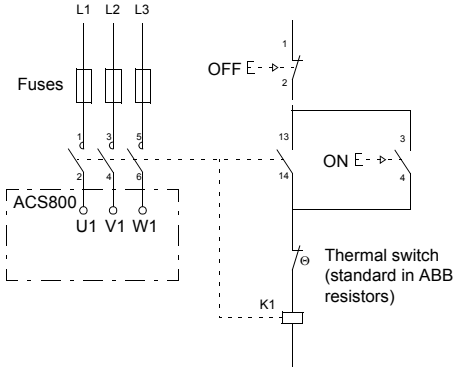

Protection of frame size R6

A main contactor is not required for protecting against resistor overheating when the resistor is dimensioned according to the instructions and the internal brake chopper is in use. The drive will disable power flow through the input bridge if the chopper remains conductive in a fault situation. **Note:** If an external brake chopper (outside the drive module) is used, a main contactor is always required.

A thermal switch (standard in ABB resistors) is required for safety reasons. The cable must be shielded and not longer than the resistor cable.

With Standard Control Program, wire the thermal switch as shown below. By default, the drive will stop by coasting when the switch opens.

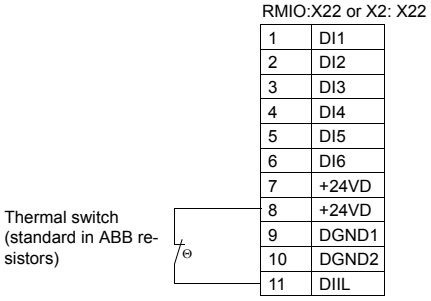

For other control programs, the thermal switch may be wired to a different digital input. Programming of the input to trip the drive by “EXTERNAL FAULT” may be needed. See the appropriate firmware manual.

Brake circuit commissioning

For Standard Control Program:

- Enable the brake chopper function (parameter 27.01).
- Switch off the overvoltage control of the drive (parameter 20.05).
- Check the resistance value setting (parameter 27.03).
- Frame size R6: Check the setting of parameter 21.09. If stop by coasting is required, select OFF2 STOP.

For the use of the brake resistor overload protection (parameters 27.02...27.05), consult an ABB representative.

WARNING! If the drive is equipped with a brake chopper but the chopper is not enabled by parameter setting, the brake resistor must be disconnected because the protection against resistor overheating is then not in use.

For settings of other control programs, see the appropriate firmware manual.

External +24 V power supply for the RMIO board via terminal X34

What this chapter contains

This chapter describes how to connect an external +24 V power supply for the RMIO board via terminal X34. For the current consumption of the RMIO board, see chapter *Motor Control and I/O Board (RMIO)*.

Note: External power is easier to supply to the RMIO board via terminal X23, see chapter *Motor Control and I/O Board (RMIO)*.

Parameter settings

In Standard Control Program, set parameter 16.09 CTRL BOARD SUPPLY to EXTERNAL 24V if the RMIO board is powered from an external supply.

Connecting +24 V external power supply

1. Break off the tab covering the +24 VDC power input connector with pliers.
2. Lift the connector upwards.
3. Disconnect the wires from the connector (keep the connector for later use).
4. Isolate the ends of the wires individually with insulating tape.
5. Cover the isolated ends of the wires with insulating tape.
6. Push the wires inside the skeleton.
7. Connect the wires of the +24 V external power supply to the disconnected connector:
   if a two-way connector, + wire to terminal 1 and - wire to terminal 2
   if a three-way connector, + wire to terminal 2 and - wire to terminal 3.
8. Plug the connector in.

Frame sizes R2 to R4

Frame sizes R5 and R6

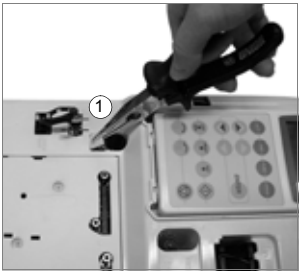

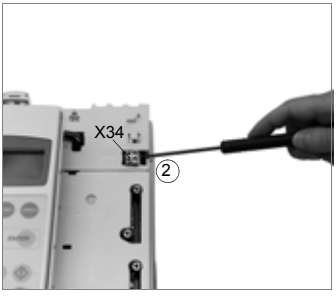

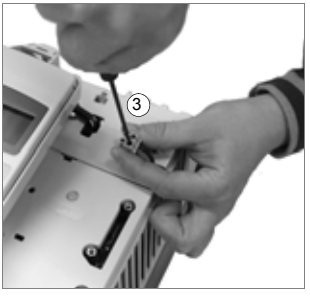

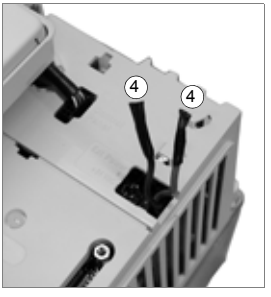

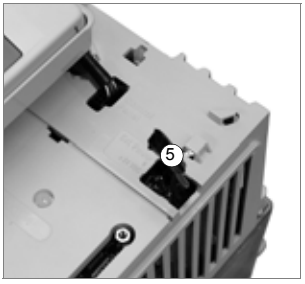

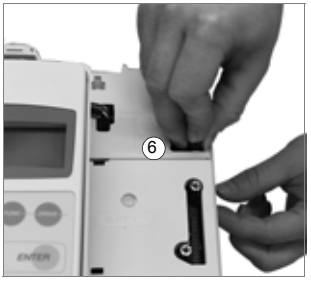

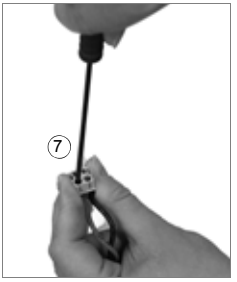

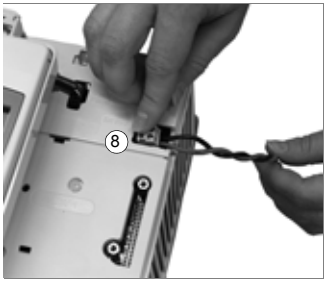

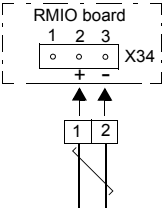

Connection of a two-way connector

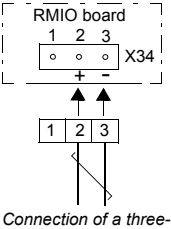

Connection of a three-way connector

3AFE64382101 Rev J EN
EFFECTIVE: 1.10.2008

ABB Oy
AC Drives
P.O. Box 184
FI-00381 HELSINKI
FINLAND
Telephone +358 10 22 11
Fax +358 10 22 22681
Internet www.abb.com

ABB Inc.
Automation Technologies
Drives & Motors
16250 West Glendale Drive
New Berlin, WI 53151
USA
Telephone 262 785-3200
800-HELP-365
Fax 262 780-5135

ABB Beijing Drive Systems Co. Ltd.
No. 1, Block D, A-10 Jiuxianqiao Beilu
Chaoyang District
Beijing, P.R. China, 100015
Telephone +86 10 5821 7788
Fax +86 10 5821 7618
Internet www.abb.com