ABB MEASUREMENT & ANALYTICS

Industrial temperature measurement

Basics and practice

Industrial temperature measurement

Basics and practise

ABB Automation Products GmbH

Introduction

Automation is a growing, worldwide fundamental technology. The driving force for its growth are the variety of distinct economical and environmental requirements of the basic food and energy supply for an efficient, low emission utilization of natural resources and energy and the increased productivity in all manufacturing and distribution processes.

As a result of the enormous growth of the markets in certain regions of the world and the increasing integration between them, new requirements and unexpected opportunities have arisen.

The interaction between the actual measurement technology and the processes is continually becoming tighter. The transfer of information and quality evaluations have traditionally been a key requirement and a fundamental strength of the ABB-Engineers for worldwide optimization through automation.

Temperature, for many processes in the most varied applications, is the primary measurement value. The wide spectrum of applications in which the measurement locations are usually directly in the fluid medium, often pose difficult requirements on the process technician.

With this Handbook for industrial temperature measurements we are attempting to provide the technician with solutions to his wide variety of responsibilities. At the same time, it provides for those new to the field, insight into the basics of the most important measurement principles and their application limits in a clear and descriptive manner.

The basic themes include material science and measurement technology, applications, signal processing and fieldbus communication. A practice oriented selection of appropriate temperature sensor designs for the process field is presented as well as the required communication capability of the meter locations.

The factory at Alzenau, Germany, a part of ABB, is the Global Center of Competence for Temperature, with numerous local experts on hand in the most important industrial sectors, is responsible for activities worldwide in this sector.

125 years of temperature measurement technology equates to experience and competence. At the same time, it forms an important basis for continued innovation. In close cooperation with our customers and users, our application engineers create concepts to meet the measurement requirements. Our Sector-Teams support the customer, planner and user in the preparation of professional solutions.

The most modern developments, supported by a network of globally organized ABB-Research Centers, assure innovative products and solutions. Efficient factories and committed employees manufacture the products using the latest methods and production techniques. Competent and friendly technical advice from Sales and Service round out the ABB offering.

We wish you much pleasure when reading this Handbook and that you may find success when applying the principles to practical applications. Thanks also the all the authors who have contributed to the creation of this book. We also look forward to your suggestions and comments, which are appreciated and can be incorporated in new technological solutions.

“Power and Productivity for a better world“

Formula Symbols

p	Pressure (Pa, bar)
V	Volume (l, m^3)
n	Material quantity (mol)
R	Gas Constant
t	Temperature (°C, °F, K, °N, °R)
t_{90}	Temperature per ITS-90 in °C
T_{90}	Temperature per ITS-90 in K
Q	Heat energy (J, Nm, Ws)
Ll	Spectral radiation density (W m^{-2} l^{-1})
en	Elementary thermal voltage (mV)
R_t	Resistance at the temperature t (Ω)
R_0	Resistance at the temperature 0 °C (32 °F) (Ω)
α	Slope coefficient of a Pt100 between 0 °C (32 °F) and 100 °C (212 °F) (K^{-1} or $°F^{-1}$)
δ	Coefficient from the Callendar equation (K^{-2})
β	Coefficient per van Dusen for $t < 0$ °C (32 °F) (K^{-4})

Abbreviations

AISI	American Iron and Steel Institute
ANSI	American National Standards Institute
DKD	Deutscher Kalibrier Dienst (German Calibration Service)
JIS	Japanese Industrial Standards
NF	Normalisation Francaise (French Standards)
NAMUR	Normungs-Ausschuss der Mess- und Regelungstechnik (Standards Commission for Measurement and Control Technology)
NACE	National Association of Corrosion Engineers
ASME	American Society of Mechanical Engineers
MIL	Military Standard

1 125 Years of Competency in Temperature Measurement Technology at ABB

Significant activities at ABB in industrial temperature measurements date back to **1881**.

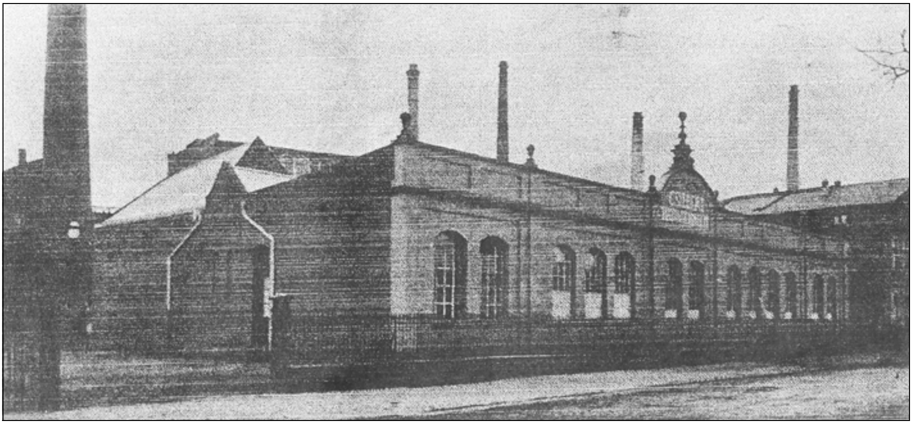

Fig. 1-1: G. Siebert factory

Wilhelm Siebert started in his family's cigar rolling factory G. Siebert in Hanau, Germany, by melting platinum and mechanically working the material into wires. He learned the art of "Assaying" at the plant of Dr. Richter & Co. in Pforzheim, Germany. In 1905 Degussa became a participant in the G. Siebert company. Later on the treatment of Platinum and Platinum/Rhodium wires for thermocouples was further developed here.

Between **1860** and **1900** the development of electrical temperature measurements began. This laid the cornerstone for present day process automation and far distance transfer of measurement signals. During **1883...1891** another branch of the long existing temperature measurement technology resulted from the invention by Prof. Ferdinand Braun (1850...1918/Nobel Prize in Physics 1909) of the Braun Pyrometer.

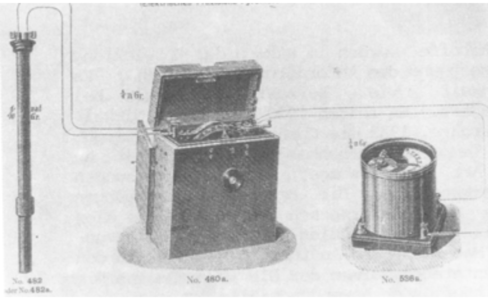

Fig. 1-2: Electrical precision-pyrometer according to Braun

A protected Platinum wire was used as sensor which was connected across a Wheatstone Bridge to galvanometer. The measurement value could be read directly from a calibrated scale in °C, without calculations, due to the changing resistance of the bridge. This instrument was used to measure temperatures to 1500 °C (2732 °F) in ovens and boilers.

In **1893** the Telethermometer was invented, e.g. “to remote control the heater from an office”. It was used to measure the temperature in rooms, greenhouses, oasts, drying chambers or ovens in the Ceramic industry.

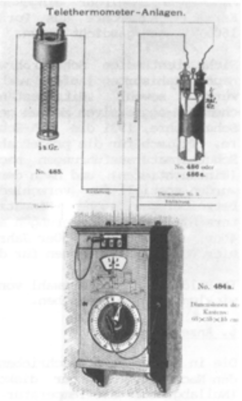

Fig. 1-3: Telethermometer

Further developments in temperature sensors during the time span **1894…1974:**

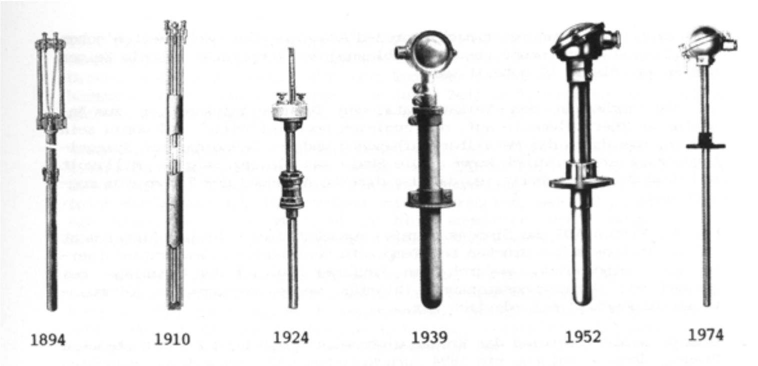

Fig. 1-4: Temperature sensor history up to 1974

Over a span of approximately 50 years, beginning in 1939, transmitters were developed to improve the transmission of the measured temperatures.

Development steps for temperature transmitters during the time span **1939…1985:**

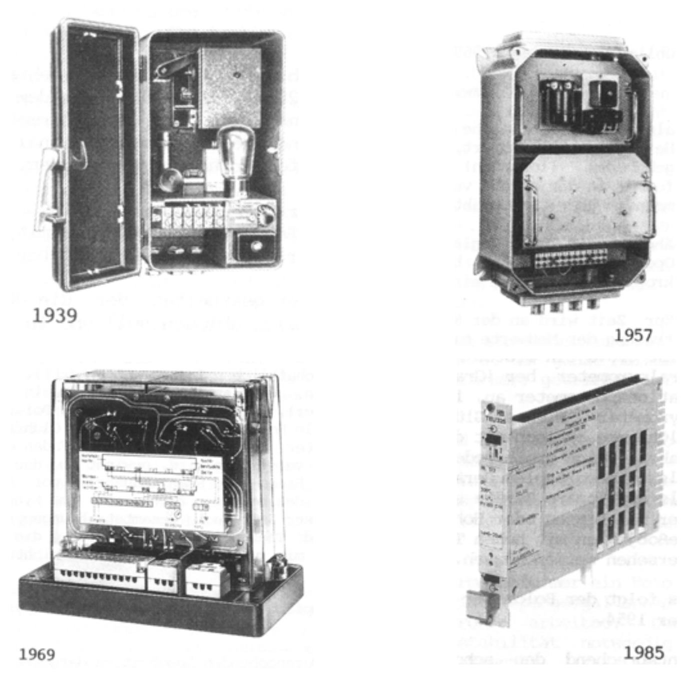

Fig. 1-5: Temperature transmitter history up to 1985

From **1950...1954** the Degussa company developed a high temperature capable thermocouple “PtRh18“ with long term stability, which later, in 1967...1974, was certified by the American Standards Association Committee C96 (ISA) as “PtRh18“ Thermocouple Type B.

About **1960** the Degussa company in Hanau, Germany, began series manufacturing of new temperature measurement wire resistors.

1962 Obrowski and Prinz from Degussa defined the reference function and basic value tables for the “PtRh18“ thermocouples.

In **1960** Degussa began manufacturing thermocouple wires and mineral insulated cables. By **1970**, Degussa had technically improved this process which led to a volume increase.

Fig. 1-6: Cross section of a mineral insulated cable

1977 Degussa further expanded their temperature measurement technology activities by acquiring Bush Beach Engineering Ltd. in England, who brought with them vast application experience in the oil and gas industry sector.

1978 one of the first worldwide electronic transmitters for mounting directly in the temperature sensor head was developed. It can be installed in explosion hazardous areas. After intensive tests in the Degussa factory, the transmitter was introduced into the market at leading customers in the process industries. After some initial concerns, the product received enormous acceptance. The new transmitter began replacing existing technologies.

Fig. 1-7: First transmitter for mounting in the sensor head (TR01)

1988 saw the introduction of an industrialized version of fiber optic temperature measurement instruments, which, e.g., can make temperature measurements in microwave systems.

1989 Degussa founded a new subsidiary and brand, SENSYCON in Hanau, Germany.

1991 Hartmann & Braun acquired SENSYCON.

1994 SENSYCON temperature measurement technology manufacturing was moved from Hanau to Alzenau, Germany, about 15 km (10 mi) away.

1995 the first HART-sensor head transmitter was developed.

1996 Elsag Bailey acquired Hartmann & Braun including the temperature measurement systems from SENSYCON.

1998 the first fieldbus capable temperature transmitter was developed.

1999 ABB acquired Elsag Bailey, whereby SENSYCON temperature measurement technology achieved a worldwide leading role in the instrumentation sector.

2006 new powerful and state of the art temperature transmitters designated TTH300 for sensor head mounting and TTF300 for field mounting were introduced to the market.

Fig. 1-8: Transmitters TTH300 and TTF300

The temperature sensor series – SensyTemp TSP100 and SensyTemp TSP300 for the process industries represent the present state of the technology.

Fig. 1-9: Temperature sensor series SensyTemp TSP

“With a Tradition for Innovation“ ABB in the last 125 years has actively lead the way in temperature measurement technology. The goal is to challenge the measurement technology and improving the efficiency to satisfy the global requirements of the customers.

2 Introduction to Temperature Measurement Technology

2.1 Historic Development

2.1.1 Heat and Temperature

Only in recent times has the heat phenomenon been studied systematically. Previously, man was satisfied with a few qualitative, practice oriented experiences relative to heat. With the invention of the steam engine, the interest of the scientists in the heat phenomenon increased. Joseph Black was the first to realize the difference between heat and temperature. In 1760 he declared that applying the same heat to different materials results in different temperatures.

Initially heat was considered to be a material substance, which could be added or removed from a material or, could be transferred from one material to another. This substance was named **Caloric**. When wood is burned, according to this theory, the Caloric content in the wood is transferred to the flame, from there further on to the boiler set over the flame and then to its contents. When the water in the boiler becomes saturated with caloric, it is converted to steam.

Only toward the end of the 18th century did observations lead *Benjamin Thompson* (Count Rumford) and *Humphry Davy* to an alternate theory, which described heat as a cyclic phenomenon.

The theory that heat is a form of energy is attributed, among others, to the work of the physicist *Sadi Carnot*, who is considered the father of scientific thermodynamics. He investigated early in the 19th century, the motion of heat from the viewpoint of how the energy stored in the steam is converted to mechanical work. The investigation of the reverse process, namely, how work is converted to heat, led to the basic thought that energy is conserved, i.e., it can neither be created nor destroyed. This approach led to the law of conservation of energy (First Law of Thermodynamics).

The prerequisite for a clear understanding of heat requires an exploration of the atomic structure of materials. In the middle of the 18th century, *Maxwell* and *Bolzmann* developed the mathematical basics and formulated the kinetic gas theory. In this theory, heat is equated to molecular movement. The thermal motions of a molecule are totally random and independent of each other. Their velocity distribution however can be defined by strict mathematical laws.

The question regarding the concept of temperature, however, was still not conclusively answered.

Maxwell defined the temperature of a body as a thermal property, which makes it possible to transfer heat (energy) to or from another body. From a measurement viewpoint, temperature is then the physical property which provides information about the energy content of a system and thereby describes the heat energy content (degree of heat, heat status). For *Maxwell* temperature was the measure of the average kinetic energy of the molecules which constitute the substance, and the measurement of the temperature provides a mean to determine the energy (heat) content of the substance.

The term temperature supposedly originated from the Latin word “tempera“, which means "moderate or soften".

If one wants to determine the temperature of a system, it follows that the velocity of the molecules should be selected as the value to be measured. Based on this approach, a system will have no heat content when the molecules have lost all their kinetic energy, i.e., are at rest. This condition could be defined as “absolute heatlessness“. Since the observation and measurement of the motion of the molecules is impractical and unrealistic, it is unusable in practice. Therefore to make practical temperature measurements, other methods must be employed. Utilized are the effects that the heat (energy) has on other properties of the system, e.g. geometric expansion when heat is applied.

Human senses evaluate the temperature of a body only subjectively. Even so, the terms “hot“, “warm“, “cold“ or “ice cold“ mean something to everyone based on their own experience and are relatively useful for comparison purposes. This also applies to visual terms such as “red hot“ or “white hot“. The exact assignment of a temperature value (quantification) however eludes the subjective possibilities of man.

For an objective and reproducible measurement of the temperature of a body, a suitable measurement instrument is required.

2.1.2 The Historic Development of the Thermometers

Instruments to measure the temperature generally are called thermometers. What the relationship to temperature was that the old Egyptians had, has not been handed down. No instrument was ever discovered in any of the Egyptian drawings from which one can infer that it was utilized for temperature measurement. But it is quite clear that the old Egyptians understood how to make ice (evaporative cooling).

The oldest known instrument for “measuring“ temperature was based on the expansion of air and is attributed to the Greek *Heron of Alexandria* (about 120 BC). It was not a Thermo “Meter“ in the true sense since it did not have a scale. Thermometers based on the same principle (the so called Thermoscopes) appeared again at the beginning of the 17th century in Europe.

Individuals who have been identified as being associated with the continued systematic development of thermometers, are *Satorio Santorre*, *Giovanfrancesco Sagredo*, *Galileo Galilei*, *Benedetto Castelli* and *Vicencio Viviani*. That all these names have an Italian heritage can be traced to the fact that the glass blowing art was most developed in Italy at that time.

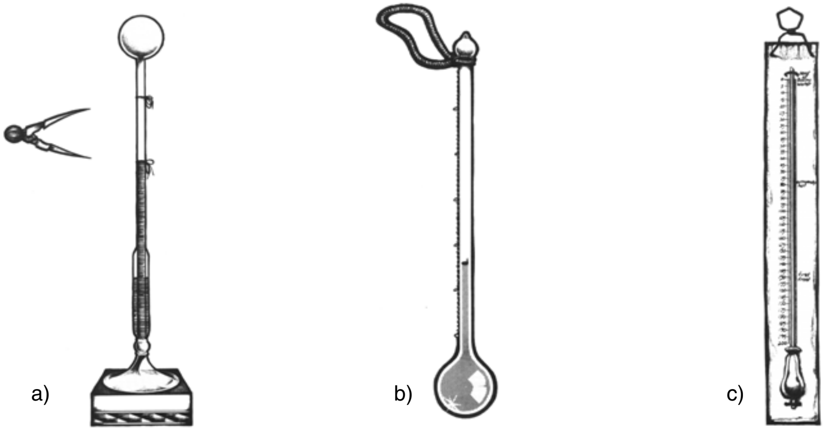

Fig. 2-1: a) Early air thermometer (thermoscope) with compass to measure the changes; b) Early florentine thermometer; c) Typical thermometer around 1750

The step from Thermoscope to liquid filled thermometer is attributed to Grand Duke *Ferdinand II* of Toscany, a student of Galilei. In 1654 he manufactured liquid alcohol filled thermometers (so called Florentine Thermometer) made with a bulb and capillary (including a scale with 50 units). The scales were aligned by comparing the instruments among each other.

Antonio Alemanni around 1660 built a thermometer with a length of 108 cm (42.5“) which was divided into 520 units. The capillary for this thermometer was like a coil. This instrument is still available today.

In 1701 *Sir Isaac Newton* described a liquid oil filled thermometer and a calibration method at the temperature of freezing water, (0 °N), and the temperature of blood (12 °N).

At the beginning of the 18th century, the Dutchman *Musschenbroek* was apparently the first to conceive the thought of using the expansion of metals for measuring temperatures.

Around 1703 the Frenchman *Amontons* designed a gas thermometer with a constant volume and postulated, that heat was a type of movement. He was the first to mention the concept of a zero temperature point in nature, which would be reached if all movement was completely at rest.

In 1714 *Fahrenheit*, a glass blower from Danzig in Poland, appreciably improved the existing liquid filled thermometers and implemented the initial step to a measurement instrument. He initially filled the thermometer with alcohol and later with Mercury, which had the advantage of not wetting the glass capillary and which also could be used up to the boiling point of water. These “Fahrenheit Thermometers“ had a scale which was reproducible because Fahrenheit introduced three fixed values:

- 0 for the temperature of an ammonium chloride mixture,
- 4 for the temperature of melting ice and
- 12 for the temperature of the human body.

It was desirable at that time to define the spacing between the fixed values as 12 in accordance with the duodecimal numbering system. Since the individual values were unsuitably large, they were halved a number of times until each of the original degrees corresponded to 8 degrees. The result was that the freezing point of water now occurred at a value of 32 and body temperature at a value of 96. Later Fahrenheit used the boiling point of water as the upper fixed value and established its value as 212 °F by extrapolating the scale from 0 °F to 32 °F. He maintained these values, whose difference is 180 °F, for all later measurements. Closer observation resulted in a body temperature of 98 °F in a healthy individual. This scale can still be found in a number of countries today.

Around 1715 the Frenchman *Réaumur* defined a temperature scale which bears his name. In this scale the ice point is 0 °R and the temperature increase which an alcohol-water mixture (20 % water) experiences as its volume increases by 0.1 % is defined as 1 °R. Transferring this scale to a Mercury thermometer resulted in a value of 80 °R for the boiling point of water.

In 1740 the Swede *A. Celsius* defined a scale with 100 graduations in which the freezing point of water is 0 and its boiling point is 100. Three years later the Celsius scale was established by his student *Carl von Linné*, which exists to the present day, with the conditions **0 °C for the freezing point** and **100 °C for the boiling point**.

In the middle of the 18th century, the temperature measurement (Thermometry) was commonly introduced to the science as measurement technology. The maximum measurable temperatures at that time were about 300 °C (572 °F). The desire to measure temperatures of molten metals (metallurgy) led to the development of additional measurement methods.

The important milestones of the later developments:

1800 Construction of a simple bimetal thermometer by *A. L. Brèguet.*

1818 Discovery of the relationship between the electrical resistance of an ohmic conductor and temperature by *H. Cr. Oersted.*

1820 Description of the effect of thermoelectricity by *Seebeck*.

1821 Construction of the first thermocouple by *H. Davy*.

1840 Development of a thermocouple made of Nickel-Silver and iron for measuring body temperature by *Chr. Poggendorf*.

1852 Establishment of a thermodynamic temperature scale, which is independent of all material properties and is based on the 2nd Law of Thermodynamics by *William Thompson (later Lord Kelvin*).

1871 Construction of a Platinum resistance thermometer by *Werner von Siemens*

1885 Further development of the Platinum resistance thermometer into a precision thermometer, including higher temperature use by *H.L. Callendar*

1887-1889 Construction of thermocouples for technical temperature measurements by *H. le Chatelier* and *C. Barus*

1892 Development of the first usable spectral pyrometer by *H. le Chatelier.*

The problems which scientists in the 18th century had in using their instruments and the transfer of their measurement results were clarified by statements made by *René-Antoine Ferchault de Réaumur* in the year 1730:

“The thermometers are without a doubt one of the nicest inventions of modern physics, and they have also contributed most to its progress. One likes very much to observe thermometers in order to determine the temperature of the air; namely, one uses the instrument when it is too hot or too cold for comfort.

If on the one hand one realizes how amusing and useful this instrument is, one knows on the other hand its imperfections. The action of all thermometers is different. Finally, one understands only the thermometer which one has observed for many years. All others remain incomprehensible.“

2.1.3 The Thermodynamic Temperature Scale

The decisive starting point for a general temperature scale is the indispensable requirement for a reproducible scale, independent of the special characteristics of the materials used. In addition, the entire temperature range must be applicable without restrictions, actually, from the lowest to the highest temperatures. This is the only way to ensure the transferability of measurement results.

The path to this goal is provided by the basics of thermodynamics and was first followed by Lord Kelvin in the year 1852. Thermodynamics describes the relationship between condition changes of materials and temperature, allowing the temperature to be determined when any of these condition changes can be measured.

The definition of the thermodynamic temperature scale is derived from the 2nd Law of Thermodynamics using the Carnot Cycle. The starting point is the fact that the temperature change in a perfect gas under constant volume and pressure conditions is a function only of the heat quantity Q added or removed and is proportional to it.

A gas volume which has no heat energy content has reached its lowest thermodynamic energy level. From this viewpoint Kelvin postulated the existence of a lowest possible temperature, the **absolute zero**, and assigned the value 0 to that condition. By defining the scale in this manner, negative temperatures cannot exist, and therefore, the temperature scale proposed by Kelvin has an absolute character, an **absolute temperature scale.** Thermodynamic temperature conditions are defined by the absolute temperature value with units of "Kelvin" (K). The Kelvin units are one of the primary units which exist today in the International System of Units (SI).

For the practical determination of the temperature, the quantities of heat added or removed during the process cycle must be determined experimentally. The required procedure is technically very difficult to solve.

Using the equation of state for a perfect gas as a basis

$$p \cdot V = n \cdot R \cdot T$$

which defines the relationship between the thermodynamic values pressure (p), volume (V), temperature (T) of a quantity (n) of a gas and the ideal gas constant (R), it can easily be shown that the thermodynamic temperature (T) can be calculated from the measurement of one of the other variables (pressure or volume), provided that the other values remain constant. The scientific significance of the thermodynamic temperature scale achieved even greater importance, when *L. Bolzmann* and *M. Planck* found a method to include light-radiation of very highly heated substances in the basic equations of thermodynamics.

2.1.4 The International Temperature Scale of 1990 (ITS 90)

In metrological practice, thermodynamic temperatures are measured with a gas thermometer, or at higher temperatures, using radiation pyrometers.

The first valid, generalized definition for a temperature scale, was for normal Hydrogen in the year 1889. It was based on using a gas thermometer as the measuring instrument.

The effort for this measurement method can hardly be justified for practical measurements. Therefore at the beginning of the last century the first experiments were conducted to define an easily representable, and thereby practical temperature scale, which would be in essential agreement with the thermodynamic temperature scale.

The first version of this scale was the “International Temperature Scale of 1927“ (ITS-27). Based on the scales ITS 48 and IPTS-68, the EPT-76 was published in 1975.

Further basic theoretical and experimental investigations of a thermodynamic temperature scale in the subsequent years led to a new and improved formulation which has been valid since 1990, the “**International Temperature Scale of 1990“ (ITS-90)**.

Temperatures measured per ITS-90 are designated **T_{90} for temperature values in K** and **t_{90} for temperature values in °C.**

ITS-90 defines a temperature scale in the range from 0.65 K to far above 3000 K. It is divided into ranges, some of which overlap, for which defined temperature points the “Normal Instruments“ (to picture the ranges between the fixed points), and equations are prescribed for extrapolation.

In the temperature range to 1357 K (1084 °C/1983 °F), for thermometric measurements 16 fixed points are used for the defining and mathematical relationships are given with which temperature values between two of these fixed points can be determined. The fixed points are the phase equilibrium values for extremely pure substances, at which the phase change (liquid to gas or liquid to solid) occurs at constant temperature values. Numerical values are assigned to these temperatures that best agree with the thermodynamic measurements. The most important fixed point in ITS-90 is the **triple point of water**, at which solid, liquid, and gaseous water coexist in equilibrium and which occurs at T_{90} = 273.16 K or t_{90} = +0.01 °C.

Equilibrium Conditions	T_{90} / K	t_{90} / °C
Vapor pressure of Helium	3...5	-270.15...-268.15
Triple point of equilibrium Hydrogen	13.8033	-259.3467
Vapor pressure of equilibrium Hydrogen (329 hPa) (1022 hPa)	~ 17 ~ 20.3	~ -256.15 ~ -252.85
Triple point of Neon	24.5561	-248.5939
Triple point of Oxygen	54.3584	-218.7916
Triple point of Argon	83.8058	-189.3442
Triple point of Mercury	234.3156	-38.8344
Triple point of Water	273.16	0.01
Melting point of Gallium	302.9146	29.7646
Solidification point of Indium	429.7485	156.5985
Solidification point of Tin	505.078	231.928
Solidification point of Zinc	692.677	419.527
Solidification point of Aluminum	933.473	660.323
Solidification point of Silver	1234.93	961.78
Solidification point of Gold	1337.33	1064.18
Solidification point of Copper	1357.77	1084.62

Tbl. 2-1: Defined fixed points for ITS-90

In the temperature range above 1357 K, ITS-90 is defined using the **Planck Radiation Formula** (black body radiation).

Dependent on the type of normal instrument (interpolation instrument), ITS-90 is divided into three temperature ranges:

In the range from 0.65 K to 24.55 K the steam and gas pressure thermometers of various designs are used as the normal instruments.

In the range from 13.8 K to 1234.93 K the Platinum resistance thermometer is used as the normal instrument. Platinum normal resistance thermometers (so called ITS-90-Thermometers) must satisfy very high technical requirements and are exceptional precise instruments. For practical applications in calibration laboratories there also exist so called secondary thermometers, which are less precise but possess better mechanical stability.

In the range above 1234.93 K (solidification point of silver) radiation pyrometers are the normal instrument.

2.2 Basics of Temperature Measurement

2.2.1 The Physical Concept of Temperature

Temperature can be viewed as a measure of the statistically determined average velocity of the molecules in a body and thereby it is kinetic energy. In order to warm a body from temperature T1 to T2, energy must be added. How much depends to some degree on the number of molecules (the amount of material) and their size. In order to describe the thermodynamic energy level of the body by its temperature, the velocity distribution of its molecules must be determined based on statistical principles. Thus the laws of Thermodynamics only apply when a sufficiently large number of molecules are present.

In modern Thermodynamics the temperature of a body is described as a type of heat potential, with the property to add or remove heat (heat sources and heat sinks). So the temperature gradient (the direction of the greatest temperature difference) defines the direction of the greatest heat effect within a body. The direction of the heat effect is always from the higher to the lower temperature.

Although this statement may appear trivial, it is of fundamental importance when using contacting thermometers.

2.2.2 The Technical Significance of Temperature

Temperature is one of seven basic values in the current SI-System of Units and at the same time, probably the most important parameter in measurement technology.

Temperature measurements can be roughly divided in three application categories:
- Precision temperature measurements for scientific and basic research
- Technical temperature measurements for measurement and control technology
- Temperature monitoring using temperature indicators.

The goal of the technical temperature measurement is to strive for a practical solution for every application requirement, which should be an optimum for the required measurement accuracy at acceptable costs.

Of the many methods used for temperature measurements, and of those described in detail in this handbook, the electrical temperature sensors have a dominant position in the measurement and control technology. They convert the measured value into an electrical signal.

2.2.3 The Thermoelectric Effect

The **Seebeck-Effect** together with the Peltier and Thomson Effect belongs to a group of thermoelectrical effects. Its discovery has been attributed to *T. J. Seebeck*. In the year 1822 he published the observation that a current can be recognized in an electrical circuit comprising two dissimilar metal conductors, when each of the two connection points of the conductors is at a different temperature level. The cause of this thermal current is the generation of a thermal voltage (thermal force) whose magnitude is proportional to the temperature difference between the hot and cold ends and additionally is a function of the applied material combination.

As early as 1826 *A. Becquerel* recommended a Platinum-Palladium thermocouple for temperature measurement.

Theory of the Thermoelectric Effect

The temperature dependence of the electron potentials, which cause a charge shift in an electrical conductor when it is placed in a nonhomogeneous temperature field, is considered today as the origin of the thermoelectrical effects.

Simply stated: the free charge carriers (electrons) in a one side warmed conductor distribute themselves in a nonhomogeneous manner so that a potential difference (thermal voltage) is generated. At the cold end more electrons accumulate while at the hot end, the electron quantity is decreasing. Therefore it is plausible that even in a single electrical conductor in a temperature field a thermal voltage is generated.

This thermal voltage can only be measured if a second conductor is added (thermocouple), provided that the temperature dependence of this effect is different in the second conductor from that in the first conductor (see Fig. 2-2).

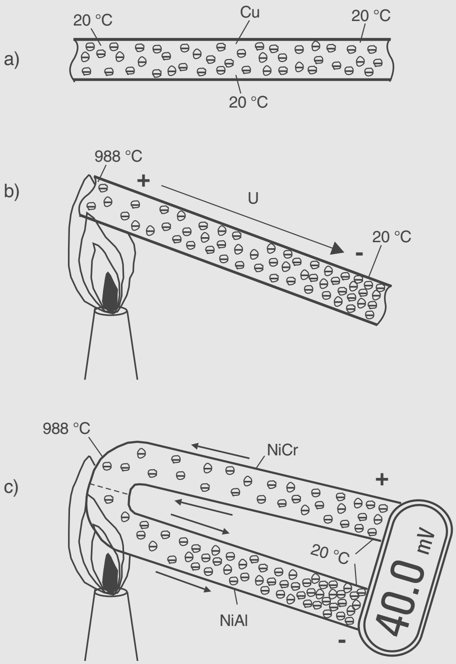

Uniform electron distribution for a homogeneous temperature distribution in a conductor

Electron depletion at the hot end

Dissimilar electron concentration in the circuit consisting of two different conductors

Fig. 2-2: Generation of a thermal voltage

If the thermal voltage effects in both conductors are the same (e.g. for identical conductor materials), then the effects cancel each other and no thermal voltage can be measured.

It is important that this thermal voltage effect is the result of a volume diffusion effect of the charge carriers and not a contact voltage phenomenon between the two materials. Therefore it is understandable that the thermal voltage is produced along the entire length of the thermocouple and not only at the “hot“ connection between the two legs.

Principles

The **Law of Linear Superposition** (Superposition Principle) applies to thermocouples, if one visualizes a thermocouple as a series circuit consisting of a (infinite) number of individual elements. The thermal voltage generated in the thermocouple is the same as the sum of the thermal voltages generated in the individual elements. An additional hot zone added between the hot and the cold end therefore has no effect on the resultant thermal voltage, since the additional added thermal voltages cancel each other.

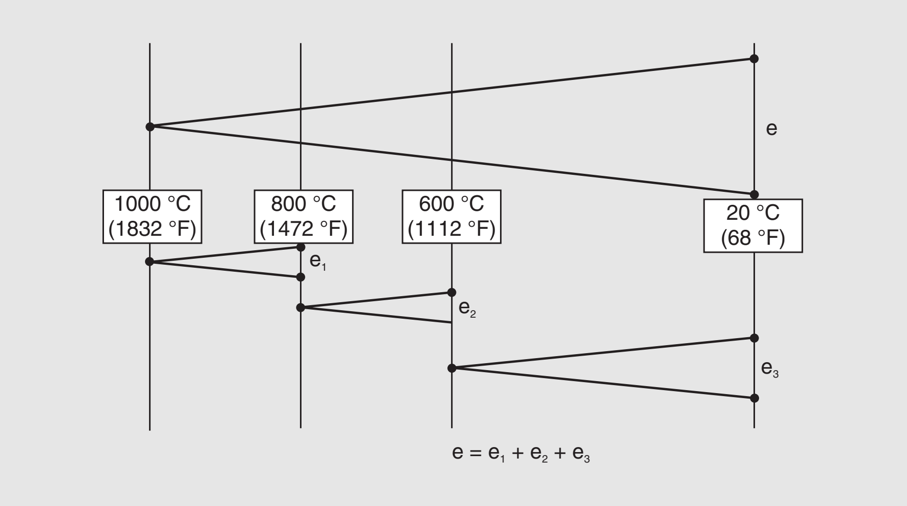

Fig. 2-3: Superposition of thermal voltages

The **Law of Homogeneous Temperature** states that the thermal voltage in a conductor in a homogeneous temperature field is equal to zero. Therefore the thermal voltages in a thermal circuit (series circuit) made up of any number of different material combinations is also equal to zero, if all the components are at the same temperature. For practical application this means that even nonhomogeneous thermocouple wires or plug connections of different materials have no effect as long as no temperature difference exists at that location. Therefore design care must be exercised, especially in the area of plug connections. E.g. a massive thermal insulation (isothermal block) may be used to achieve a homogeneous temperature.

The **Law of a Homogeneous Circuit** states, that the temperature of homogeneous conductors between two measurement locations does not have any effect on the resultant thermal voltage. Of greater importance is the reverse conclusion: if the resultant thermal voltage changes through regions of nonhomogeneous temperatures (with constant hot and cold ends) then the conductor material in not homogeneous. Nonhomogeneous conditions can occur during production, or already during use (mechanical or thermal overstressing) of thermocouples. Of course, the nonhomogeneous conditions will have no effect if they are in a homogeneous temperature field.

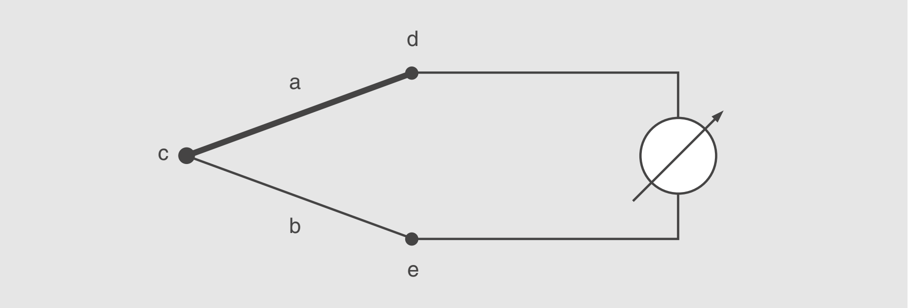

Fig. 2-4: Thermal circuit: c = Metering point; a, b = Thermal legs; d, e = Reference junction

Derived Fundamental Conclusions for the Use of Thermocouples:

- In a homogeneous temperature field no thermal voltage is generated.
- In a homogeneous conductor the magnitude of the thermal voltage is only a function of the temperature difference between the ends of the conductor.
- The junction of a thermocouple does not generate any thermal voltages.

2.2.4 The Temperature Dependent Ohmic Resistance

The electrical conductivity of all metals increases greatly with decreasing temperatures. The electrical conductivity of a metal is based on the movement of its conduction electrons, the so called electron gas. It consists of the outer electrons of the metal atoms. The atoms of the metal form a dense ion lattice structure. The lattice atoms oscillate. As the temperature increases the oscillation amplitude increases. This impedes the motion of the conduction electrons, resulting in a temperature dependent increase of the electrical resistance.

This effect is described as a positive temperature coefficient (Tc) of the electrical resistance. It is utilized as the measurement effect. Additionally, flaws in the crystalline structure of the metal interfere with the electron flow. These flaws include foreign or missing lattice electrons, lattice faults at the particle boundaries and atoms in the lattice interstices. Since these interference effects are temperature independent, they result in an additional constant resistance value.

Therefore the relationship between temperature and electrical resistance is no longer linear, but can be approximated by a polynomial. Metals, which are suitable for use as resistance thermometers, should have a high Tc, so that the temperature dependent resistance changes are pronounced. There are additional requirements for the materials including high chemical resistance, easy workability, availability in a very pure state and excellent reproducibility of the electrical properties. Also the resistance materials may not change their physical and chemical properties in the temperature range in which they are to be used. Freedom from hysteresis effects and a high degree of pressure insensitivity are further requirements.

Platinum, in spite of its high price, has become dominant as the resistance material for industrial applications . Alternative materials such as Nickel, Molybdenum and Copper are also used, but play a subordinate role at this time.

Platinum Resistance Thermometer Curves

For Platinum the resistance to temperature relationships are especially easy to describe. A polynomial of this form suffices:

$$R_t = R_0\,(1 + At + Bt^2) \qquad \text{for } t \geq 0\ °\text{C} \qquad (1)$$
$$R_t = R_0\,(1 + At + Bt^2 + C(t-100)t^3) \qquad \text{for } t < 0\ °\text{C} \qquad (2)$$

The value R_0 is the resistance of the thermometer at 0 °C. The coefficients A, B and C, as well as all the other important properties which the Platinum resistance thermometers must satisfy are contained in Standard EN 60751.

Callendar in 1886 had already formulated the relationship as a quadratic equation for temperature ranges > 0 °C. He first defined by using a strictly linear approach similar to that for gas thermometers, a so called Platinum temperature t_p using the expression:

$$t_p = 100 \times \frac{R_t - R_0}{R_{100} - R_0} = \frac{1}{\alpha} \times \frac{R}{R_0} - \frac{1}{\alpha} \qquad (3)$$

If one substitutes for α the average temperature coefficient between 0 °C and 100 °C, the equation gives a linear relationship between the resistance R_t and the temperature t_p, in which t_p not only agrees at 0 °C but also at 100 °C with the actual temperature t. For all other temperatures the calculated value of t_p differs from the true temperature t.

By introducing a second constant δ, the differences between the true temperature t and the Platinum temperature t_p are taken into account:

$$R_t = R_0 \times \left(1 + \alpha t + \alpha\delta \times \left(\frac{t}{100}\right) \times \left(1 - \frac{t}{100}\right)\right) \qquad (4)$$

This gives the “historical“ form as:

$$t - t_p = \delta \times \left[\left(\frac{t}{100}\right)^2 - \left(\frac{t}{100}\right)\right] \qquad (5)$$

This equation is known as the **Callendar-Equation**. The basic Callendar-Equation however, leads quickly to appreciably large errors for temperatures < 0 °C. The equation was improved by *van Dusen* in 1925 by the introduction of an additional correction factor with a constant value β (β is equal to zero for temperatures $\geq$ 0 °C). This modified equation is known as the **Callendar-van Dusen-Equation**.

From a mathematical standpoint, there are no differences between the curves in the DIN EN standards and Callendar-van Dusen-Equation. In both cases the curves are defined by three or four (at $t < 0$ °C) coefficients. It is relatively simple to convert the constants A, B, C into a, d and b.

For years the formulation of Callendar-van Dusen enjoyed great popularity because of the simplicity by which the constants can be determined directly by calibrating at different temperatures (0 °C, 100 °C etc.). Furthermore, the parameters α and δ can essentially be considered to be material properties. In this case, the α-value provides information about the purity of the used Platinum and the δ-value about the actual mechanical construction of the thermometer (voltage freeness).

Since the introduction of ITS-90, the boiling point of water (100 °C) is no longer a defined point in the temperature scale, and since that temperature is essential for determining the α-value in the Callendar-van Dusen equation, this formulation has lost its significance in recent times.

Typically, the curves today are defined by equations (1) and (2), with the coefficients published in the Standard EN 60751:

$$A = 3.9083 \times 10^{-3} \ \mathrm{K}^{-1}$$

$$B = -5.775 \times 10^{-7} \ \mathrm{K}^{-2}$$

$$C = -4.183 \times 10^{-12} \ \mathrm{K}^{-4}$$

2.3 The Principles of Temperature Measurement

The development of temperature measurement has and is occurring in parallel with the technological developments. Thereby only a portion of the new measurement methods have replaced the older ones. They have actually expanded their scope allowing temperature measurement to be made in areas where in the past none or only very restricted ones were possible.

In the following table a number of measurement methods will be presented in condensed form together with their application ranges and significance. The table below is based on the temperature measurement methods described in VDI/VDE 3511 Sheet1)

Measurement Methods	**Range**		**Error Limits**
	from to °C (°F)		
Mechanical Thermometers			
Liquid filled glass thermometer			
Non-wetting liquid	-38 (-36)	630 (1166)	according to DIN 16178 Sheet 1
Wetting liquid	-200 (-328)	210 (410)	
Indicator Thermometers			
Bimetal thermometer	-50 (122)	400 (752)	1...3 % of the indicator range
Rod expansion thermometer	0 (32)	1000 (1832)	1...2 % of the indicator range
Liquid filled spring thermometer	-30 (-22)	500 (932)	1...2 % of the indicator range
Vapor pressure spring thermometer	-200 (-328)	700 (1292)	1...2 % of the scale length
Thermocouples			
Cu-CuNi, Type U, T	-200 (-328)	600 (1112)	0.75 % of the reference value of the temperature, at least according to EN 60584
Fe-CuNi, Type L, J	-200 (-328)	900 (1652)	
NiCr-Ni, Type K, NiCrSi-NiSi, Type N	0 (32)	1300 (2372)	
PtRh-Pt, Type R, S 10 % Rh (S); 13 % Rh (R)	0 (32)	1600 (2912)	0.5 % of the reference value of the temperature, at least according to EN 60584
Pt Rh30-PtRh6, Type B	0 (32)	1800 (3272)	
Resistance Thermometers with Metal Resistors			
Pt-resistance thermometer	-200 (-328)	1000 (1832)	0.3...4.6 °C (32.54...40.28 °F) depending on the temperature (EN 60751)
Ni-resistance thermometer	-60 (-76)	250 (482)	0.4...2.1 °C (32.72...35.78 °F) depending on the temperature (according to DIN 43760)

Tbl. 2-2: Measurement methods

Measurement Methods	**Range**		**Error LImits**
	from to °C (°F)		
Semiconductor Resistance Thermometers			
Hot wire resistance thermometer, thermistor	-40 (-40) -60 (-76) -100 (-148)	180 (356) 200 (392) 400 (752)	0.1...1 °C (0.2...2 °F); 0.5...2.5 °C (1...5 °F) depending on the temperature
Cold wire resistance thermometer		200 (392)	2...10 °C (4...18 °F)
Silicon measurement resistor	-70 (-94)	175 (347)	0.2...1 °C (0.4...2 °F)
Semiconductor diodes/integrated temperature sensor		160 (320)	0.1...3 °C (.02...6 °F) depending on the temperature
Radiation Thermometers			
Spectral pyrometer	20 (68)	5000 (9000)	0.5...1.5 % of the temperature, but at least 0.5...2 °C (1...4 °F) in the range from -100...400 °C (-148...752 °F)
Infrared radiation pyrometer	-100 (-148)	2000 (3600)	0.5...1.5 % of the temperature, but at least 0.5...2 °C (1...4 °F) in the range from -100...400 °C (-148...752 °F)
Total radiation pyrometer	-100 (-148)	2000 (3600)	0.5...1.5 % of the temperature, but at least 0.5...2 °C (1...4 °F) in the range from -100...400 °C (-148...752 °F)
Ratio pyrometer	150 (302)	3000 (5400)	0.5...1.5 % of the temperature, but at least 0.5...2 °C (1...4 °F) in the range from -100...400 °C (-148...752 °F)
Thermography instrument	-50 (-58)	1500 (2900)	0.5...1.5 % of the temperature, but at least 0.5...2 °C (1...4 °F) in the range from -100...400 °C (-148...752 °F)
Quartz thermometer	-80 (-112)	250 (482)	Resolution 0.1 °C (0.2 °F)
Thermal noise thermometer	-269 (-452)	970 (1778)	0.1 %
Ultrasonic thermometer		3300 (6000)	approx. 1 %
Gas thermometer	-268 (-450)	1130 (2066)	depending on design
Optical Methods			
Fiber optic luminescence thermometer		400 (752)	0.5 °C (32.9 °F)
Fiber optic measurement system based on Raman-Radiation		600 (1112)	1 °C (33.8 °F)

Tbl. 2-3: Continuation – measurement methods

A differentiation is made between contacting temperature measurement methods and non-contacting measurement methods. The contacting measurement methods, which are dominant in industrial temperature measurement technology, can be further subdivided into mechanical and electrical contacting thermometers.

2.3.1 Mechanical Contacting Thermometers

The expansion of gases, liquids and solids as the temperature increases is experienced daily. To use this effect for temperature measurement in practice, the specific properties of the material have to be taken into account.

Considering a solid body, the length change (dL) of a bar exposed to a temperature change (dt) as a first approximation is proportional to the bar length (L):

$$dL = a \times L \times dt$$

The proportionality factor **a** (linear thermal longitudinal expansion coefficient) is a property of the specific material. The integration of this equation, beginning with the length of the bar at a given temperature, gives the length of the bar at temperature t. Since the proportionality factor a can only be considered as linear over small temperature ranges, higher order terms must be included in the calculation for larger temperature differences.

The technical application of this sensor principle leads to bar and bimetal thermometers. They are installed in industrial applications where local indicators are all that is required.

The dependence of a liquid volume on temperature can be utilized in an analogous manner. In this case, a cubic expansion coefficient ß applies. This coefficient is also a property of the type fluid being employed.

Liquid filled thermometers are encountered as glass thermometers (clinical thermometers, filament thermometers) or as direct indicators for machine glass thermometers. They are used for local temperature monitoring of liquids, gases and steam in pipelines and tanks.

A variant is the liquid filled spring-loaded thermometer. In this design a capillary tube completely filled with liquid is placed in a metal housing. Changes in the temperature produce an increase or decrease in the pressure which is transmitted over a membrane to an elastic, deformable spring. Newer designs measure the pressure differences and use a pressure transmitter to display the temperature values.

If the liquid is replaced by a gas, then essentially the same design principles can be applied as for the liquid filled spring-loaded thermometers. For gas pressure thermometers the ideal gas equation is used to evaluate the temperature relationships of the gas. It can be considered either at a constant pressure or a constant volume. Gas pressure thermometers can also be used for local measurements and as temperature indicators, e.g., in machines. For both the liquid filled as well as the gas pressure thermometers it is essential that the measurement body is completely surrounded by the medium whose temperature is being measured.

2.3.2 Electric Contacting Thermometers

Thermocouples

If two dissimilar metals are connected together, a voltage is generated. This voltage is a function of the combined metals and the changes in the temperature (Thermal Voltage).

Resistance Thermometers

Metals as electrical conductors offer a resistance to the current flowing through them as a result of the oscillations of the lattice atoms. The magnitude of the resistance is dependent on the temperature.

Semiconductor Sensors

Semiconductors also exhibit a characteristic change of their electrical resistance when the temperature changes. A differentiation is made between cold wire (PTC-resistors), and hot wire (NTC-resistors or thermistors).

Semiconductor PTC’s are polycrystalline ceramics based on barium titanate. This material combination generates, in addition to the semiconductor effect, ferroelectricity. This leads to a very large increase of the electrical resistance in a narrow temperature range. The ideal application range is between -50 °C (-58 °F) and 150 °C (302 °F). Additionally the PTC's have a leap-temperature at which the increase of the resistance changes dramatically. For this reason they are specially suitable for use as temperature limit switches for machines and systems.

The NTC's, made of a mixture of polycrystalline ceramic oxides, with NiO, CaO, Li_2O additives, work differently. They are manufactured using a high temperature sinter process. They are normally used in a temperature range from -110 °C (-166 °F) to 300 °C (572 °F). For the NTC's the relationship between the resistance and the temperature is almost exponential. Because of the non-linear curve and the drift when subjected to temperature change stresses, the use of NTC's in industrial measurement technology is limited. Due to their low cost they are primarily used in the appliance and automotive industries and in other mass produced consumer product industries.

Silicon Measurement Resistors

Silicon also possesses a pronounced positive temperature coefficient and can therefore be used for temperature measurements between -70 °C (-94 °F) and 160 °C (320 °F), over which range the curves deviate only slightly from linear. Silicon measurement resistors have a high temperature coefficient and long term stability. To date they have not found wide acceptance.

2.3.3 Additional Contacting Measurement Principles

Oscillating Quartz Temperature Sensors

Oscillating quartz, cut at a specific angle, has a high temperature coefficient for its resonant frequency (approx. 100 ppm/K). This quartz can be used for temperature measurement. Its frequency vs. temperature curve is not linear, but is very reproducible. It can be described by a 5th order polynomial. The application range for these sensors is typically between -80 °C (-112 °F) and 300 °C (572 °F). The expected large industrial use of the oscillating quartz thermometers which have been introduced in 1986, has never been realized.

Thermal Noise Thermometers

For determining thermodynamic temperatures the high accuracy thermal noise thermometer is suitable. In the temperature range 300 °C (572 °F) to 1200 °C (2192 °F) it achieves a measurement uncertainty of 0.1 %. The measurement principle is based on the temperature dependence of the average velocity of the electrons in an unloaded resistor.

There are however problems in practical applications, because the thermal noise in amplifier assemblies, connection cables and other components require costly elimination effort. The use of thermal noise thermometers, due to their high cost, is limited to applications where the properties of the other more common thermometers are not stable and cannot readily be removed for recalibration. Thermal noise thermometers for example are not affected by nuclear radiation in a reactor. They are often used in combination with other electrical thermometers.

Fiber Optic Temperature Measurement Systems

This is a special measurement system, in which the locally temperatures in a glass fiber cable can be measured. It consists of a measurement instrument (laser source, optical module, receiver and evaluation unit) and a quartz glass fiber cable. Thermal molecular oscillations of the quartz glass material cause a Raman-Radiation within the fiber optic cable. The Anti-Stokes portion of the Raman-radiated light is a function of the temperature. The local fiber temperature is determined from its intensity. In this way the temperature distribution in cables, wires, pipes etc., can be measured by using fiber optics. It is used to detect local temperature differences (temperature increases), which indicate errors or damages to cables, wires and pipes.

Fiber Optic Thermometers

The fiber optic thermometer consists of a glass fiber at the end of which a crystal is mounted, e.g., a Cr-YAG-Crystal. It is excited by a pulsed luminescent radiation. The length of the excitation during the excitation conditions and therefore the decay time of the luminescent radiation decreases with increasing temperature. The application range is between -50 °C (-58 °F) and 400 °C (752 °F). Fiber optic thermometers are advantageous in areas where high electromagnetic fields may be expected as well as in potentially explosive atmospheres. Also included is the use in industrial microwave applications, (e.g., driers).

2.3.4 Non-contacting Temperature Measurement

Infrared Measurement Technology, Pyrometry

The recognition of radiation heating of a hot body belongs to the basic experiences of mankind. The measurement of temperature radiation (infrared radiation) to determine the temperature of a body is one of the newer temperature measurement methods in the industrial sector.

In a pyrometer the thermal radiation emanating from a body is focussed by a lens on a radiation receiver. As receiver, thermocouples, photomultipliers, photoresistors, photodiodes etc. can be used. The “heat radiation“ generates an electrical signal which can be utilized to determine the temperature.

A differentiation is made between the various pyrometer types, such as total radiation pyrometer, spectral pyrometer, radiation density pyrometer, distribution pyrometer and disappearing filament pyrometer.

Pyrometers can replace contacting thermometers only in a few applications. More often they are used to supplement contacting methods in areas where no or unsatisfactory results occur. Basically, pyrometry, in contrast to contacting methods, can only measure the heat on the surface.

The application focus is the temperature measurement on surfaces, on fast moving parts, on objects with minimal heat capacity or heat conductivity, on objects with fast changing temperatures and on objects which are not easily accessible. Also products which cannot be touched due to sterilization or processing constraints (e.g. in the food industry) are suitable for temperature measurements with pyrometers.

Thermal Imaging Cameras

In principle the thermal imaging camera has the same physical effects as a pyrometer. However, the pyrometers determine the average temperature of the entire surface being measured while the thermal imaging camera produces a thermal picture of the object. Area sensors are used for this. The number of available detector elements defines the quality of the picture.

Thermal imaging cameras are primarily used today to monitor and control machinery, electrical and mechanical systems and objects in which localized heating could damage or destroy the item as well as where heat losses are to be determined.

Acoustic Measurement Methods

The dispersion velocity of sound in various materials is a function of the temperature (the absolute temperature is proportional to the square of the sound velocity). This property can be used as temperature measurement method Two methods are utilized: the resonant method (e.g. quartz resonators) and non-resonant methods, which utilize for example a sound transit time measurement.

Measurement sensors for non-resonant solid body sensors consist of a Rhenium wire which operates based on a Pulse-Echo principle. Acoustic measurement methods are especially suitable for high temperatures. They are used to determine the temperature profiles in furnaces such as those used in waste incineration systems. A disadvantage of the acoustic method is its relatively high cost.

3 Industrial Temperature Measurement Using Electrical Contacting Thermometers

3.1 Sensors

3.1.1 Thermocouples

The simplest thermocouple designs are those made using insulated thermal wires. The usual insulation materials are glass fibers, mineral fibers, PVC, Silicone rubber, PFA or Ceramic. They must be compatible with the installation requirements, which include chemical resistance, temperature resistance, moisture protection, etc.

A special design of insulated thermocouple wires are mineral insulated thermocouple cables.

Thermocouples according to EN 60584/IEC 584

The thermocouples described in these standards are generally divided into two groups. The precious metal thermocouples Types S, R and B, and the base metal thermocouples Types E, J, K, N and T.

These standardized types are incorporated in many international standards and, relative to their basic thermal voltage values, are compatible. For example, it is possible to use a Type K according to EN 60584 as a Type K according to ANSI-MC 96.1, or even, as a Type K according to JIS C 1602. Only in the deviation limits of the accuracy classes may differences be found. Detailed information for each type is available in the corresponding standard.

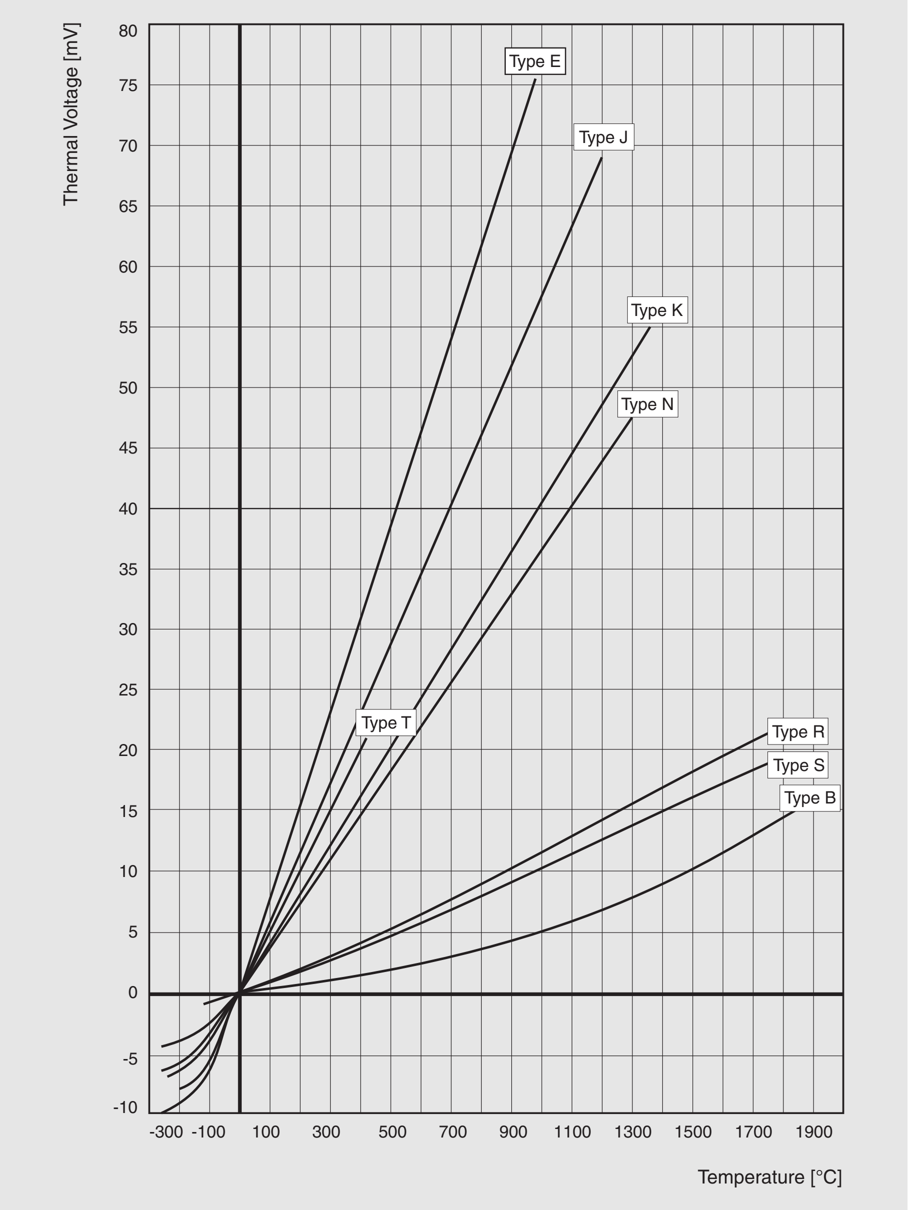

Fig. 3-1: Basic value curves for thermocouples according to EN 60584

Type S (Pt10%Rh-Pt):

Defined Temperature Range -50...1768 °C (-58...3214 °F).

The Type S thermocouple was developed and tested over 100 years ago by H. LeChatelier. These early investigations already indicated that the primary advantages of the Type S were the reproducibility of its measurements, its stability and its applicability to middle high temperatures. This was the primary reason why it has been selected as the standard thermocouple since 1927 (ITS 27) until the introduction on 1st January 1990 of ITS 90.

The nominal composition of Type S consists of Platinum-10%Rhodium compared against Platinum. The positive conductor (SP) contains 10.00 ± 0.05 % Rhodium. For the alloy, Rhodium with a purity of ≥ 99.98 %, and Platinum with a purity of ≥ 99.99 % should be used. The negative conductor (SN) is made of Platinum with ≥ 99.99 % purity. The Type S thermocouple can be used in a temperature range from -50 °C (-58 °F) almost to the melting point of Platinum at 1769 °C (3216 °F). It should be noted that the output voltages for continuous operation are only stable to about 1300 °C (2372 °F).

The life span of the thermocouple is limited at the higher temperatures due to the physical problem of grain growth in the wires. This reduces the mechanical strength, also impurities can diffuse into the wires and thereby change the thermal voltage. The thermocouple is most stable when it is operated in a clean, oxidizing environment (e.g., air), although short term use in inert, gaseous atmospheres or in a vacuum is possible. Without suitable protection, it should not be used in reducing environments, in metallic or nonmetallic vapors containing, for example, Lead, Zinc, Arsenic, Phosphorous, or Sulphur, or in lightly reducing oxides.

Decisive for the stability at higher temperatures is furthermore the quality of the protection tube and insulation material. Ceramic, in particular Aluminum oxide (Al_2O_3) with a purity of ≥ 99 %, is best suited for this purpose. Metallic protection tubes should never be used at the higher temperatures > 1200 °C (2192 °F).

Type R (Pt13%Rh-Pt)

Defined Temperature Range -50...1768 °C (-58...3214 °F).

At the beginning of the twentieth century it was noticed that the Type S thermocouples used in the USA and in Europe showed large differences in their thermal voltages among each other. In some temperature ranges differences up to 5 °C (9 °F) were noted. The reason was that in Europe the Rhodium used for the alloy was contaminated with 0.34 % iron. Since many instruments were already calibrated with these “contaminated Type S“ thermocouples, the Type R was developed as a compromise, which has comparable thermal voltages.

The nominal composition of Type R consists of Platinum-13%Rhodium compared against Platinum. The positive conductor (RP) contains 13.00 ± 0.05 % Rhodium. For the alloy Rhodium with a purity of ≥ 99.98 %, and Platinum with a purity of ≥ 99.99 % should be used. The negative conductor (RN) is made of Platinum with ≥ 99.99 % purity.

For the most part of their defined temperature range, Type R thermocouples have a temperature gradient about 12 % higher (Seebeck-Coefficient) than the Type S thermocouples. The remaining material properties are identical to the Type S.

Type B (Pt30%Rh-Pt6%Rh)

Defined Temperature Range 0...1820 °C (32...3308 °F).

The Type B thermocouple was introduced into the market in the fifties by Degussa/Hanau, Germany, and was called PtRh18, a name which is still used in some areas today. It was designed to satisfy the requirements for temperature measurements in the range 1200...1800 °C (2192...3272 °F).

The nominal composition for Type B consists of Platinum-30%Rhodium compared against Platinum-6%Rhodium. The positive conductor (BP) contains 29.60 ± 0.2 % and the negative conductor (BN) 6.12 ± 0.2 % Rhodium. For the alloy Rhodium with a purity of ≥ 99.98 %, and Platinum with a purity of ≥ 99.99 % should be used. They also contain a very small amount of Palladium, Iridium, Iron and Silicon impurities.

Investigations have shown, that thermocouples, in which both conductors are made of Pt-Rh alloys, are suitable and reliable for measuring high temperatures. They have decided advantages over Types R and S, with regard to improved stability, increased mechanical strength and higher temperature capabilities. The maximum application temperature range for Type B is essentially limited by the melting point of the Pt6%Rh conductor (BN) at approx. 1820 °C (3308 °F).

A Type B thermocouple can, if handled properly, be operated for a number of hours at temperatures to 1790 °C (3254 °F), and for a few hundred hours at temperatures to 1700 °C (3092 °F), without an appreciable change in the output thermal voltage values. The thermocouple operates most reliably when operated in clean, oxidizing environment (air), a neutral atmosphere or in a vacuum. Suitable protection is mandatory if it is to be used in reducing environment as well as in environments with destructive vapors or other contaminants which might react with the Platinum materials.

The selections of suitable protection tube and insulation materials are the same as for Type S.

Type J (Fe-CuNi)

Defined Temperature Range -210 ...1200 °C (-346...2192 °F).

Because of its relatively steep temperature gradient (Seebeck-Coefficient) and low material costs, Type J, in addition to Type K, is one of the most commonly used industrial thermocouples today.

Nominally, Type J consists of Iron compared against a Copper-Nickel alloy. The positive conductor (JP) is made of commercially available Iron with a purity of approx. 99.5 % with approx. 0.25 % Manganese and approx. 0.12 % Copper, as well as smaller quantities of Carbon, Chromium, Nickel, Phosphorous, Silicon and Sulphur.

The negative conductor (JN) is made of a Copper-Nickel alloy, which is called Constantan. It should be noted that alloys designated as Constantan which are available commercially, may have a Copper content between 45 % and 60 % . For negative conductor (JN) usually an alloy with approx. 55 % Copper, approx. 45 % Nickel and approx. 0.1 % each of Cobalt, Iron and Manganese is used.

It should be stressed, JN conductors cannot generally be exchanged with conductors of Types TN or EN, even though all consist of Constantan. Manufacturers of Type J thermocouples usually combine one particular Iron melt with an appropriate Copper-Nickel batch in order to achieve the basic thermal voltage values of Type J.

Since the composition of both conductors (JP and JN) can vary from manufacturer to manufacturer, it is not advisable to use individual conductors from more than one manufacturer, otherwise the required tolerance classes in some instances may be exceeded.

Although the basic values for Type J are defined in the standard for a temperature range from -210...1200 °C (*-346...*2192 °F), the thermocouples should only be used in a range of 0...750 °C (32...1382 °F) when operating continuously. For temperatures over 750 °C (1382 °F) the oxidation rate for both conductors increases rapidly.

Further reasons for the restricted temperature range are to find in the special properties of the positive conductor (JP). Since Iron rusts in damp environments and becomes brittle, it is not advisable to operate Type J thermocouples at temperatures below 0 °C (32 °F) without suitable protection. In addition, Iron experiences a magnetic change at 769 °C (1462 °F) (Curie point) and at approx. 910 °C (1670 °F) an Alpha-Gamma crystal structure change occurs.

Both effects, particularly the latter, have a significant influence on the thermoelectric properties of the Iron and therefore on the Type J thermocouple. Should a Type J be operated above 910 °C (1670 °F), the output thermal voltages will change appreciably, especially when cooled quickly to lower temperatures.

In the temperature range 0...760 °C (32...1400 °F) the Type J can be used in vacuum, oxidizing, reducing or inert atmospheres. In Sulphur containing environments, suitable protection should be employed at temperatures above 500 °C (932 °F).

Type K (NiCr-NiAl)

Defined Temperature Range -270...1372 °C (-454...2501 °F).

Since this thermocouple type for middle temperatures is more resistant against oxidation than Types J and E, it is used in many applications today for temperatures over 500 °C (932 °F). Nominally, the thermocouple contains a Nickel-Chromium alloy compared against a Nickel-Aluminum alloy. The positive conductor (KP) is identical to the material of Type E positive conductor and consists of 89 to 90 % Nickel, 9 to 9.5 % Chromium, approx. 0.5 % Silicon, approx. 0.5 % Iron and smaller amounts of Carbon, Manganese and Cobalt. The negative conductor (KN) contains 95 to 96 % Nickel, 1 to 2.3 % Aluminum, 1 to 1.5 % Silicon, 1.6 to 3.2 % Magnesium, approx. 0.5 % Cobalt, as well as minimal traces of Iron, Copper and Lead.

The basic values for Type K thermocouples are defined for the range from -270... 1372 °C (-454...2501 °F). It should be noted that at temperatures over 750 °C (1382 °F) the oxidation rate in air for both conductors increases sharply. Also, it should not be installed without suitable protection at higher temperatures in Sulphur containing, reducing or alternately oxidizing and reducing atmospheres.

There are also effects to be considered here which drastically change the output thermal voltages.

If a Type K is exposed for longer periods of time to higher temperatures in a vacuum, then the Chromium volatilizes out of the alloy of the KP conductor (“vacuum sensitivity“). If on the other hand, a smaller, but not negligible amount of oxygen or steam is present at the thermocouple, the KP conductor may be subjected to the so called “green rot“. In these situations, the oxidation attacks only the easier to oxidize Chromium without oxidizing the Nickel. At temperatures between 800 °C and 1050 °C (1472... 1922 °F) this is most severe. “Green rot“ and “vacuum sensitivity“ produce irreversible effects on the composition of the conductor and thereby on the thermal voltage. Erroneous measurements of more than 100 °C (212 °F) are possible!

In addition, a magnetic change in the Nickel leg KN occurs at 353 °C (667 °F) (Curie point). The Nickel-Chromium alloy of the KP-conductor in the range from 400...600 °C (752...1112 °F) changes from an ordered to an unordered atomic distribution state, the so called “K-Condition“. If a Type K is operated at temperatures over 600 °C (1112 °F) and subsequently cooled too quickly, these changes may not be reversible and can change the output thermal voltages by up to 5 °C (9 °F).

Both effects are reversible, since they can be restored to their original condition by heating to over 600 °C (1112 °F) and then slowly cooling (for additional information see chapter 3.5 "Aging Mechanisms in Temperature Sensors").

Type N (NiCrSi-NiSi)

Defined Temperature Range -270...1300 °C (-454...2372 °F).

Type N is the newest thermocouple defined in this standard. It was developed at the end of the sixties and offers distinct advantages due to its higher thermoelectric stability at temperatures over 870 °C (1598 °F) and less tendency to oxidize compared against thermocouples Types J, K and E.

Nominally, the thermocouple consists of a Nickel-Chromium-Silicon alloy compared against a Nickel-Silicon alloy. The positive conductor (NP) contains approx. 84 % Nickel, 13.7 to 14.7 % Chromium, 1.2 to 1.6 % Silicon, <0.15 % Iron, <0.05 % Carbon, <0.01 % Magnesium, as well as minimal traces of Cobalt. The negative conductor (NN) contains approx. 95 % Nickel, 4.2 to 4.6 % Silicon, 0.05 to 0.2 % Magnesium, <0.15 % Iron, <0.05 % Carbon, as well as small amounts of Manganese and Cobalt. These conductors are also known by their trade names Nicrosil (NP) and Nisil (NN).

Of all the base metal thermocouples, Type N is best suited for applications with oxidizing, damp or inert atmospheres. As a result of its relatively high Silicon content, the oxidation occurs on the surface of the conductor. Tightly adhering and protective oxides are formed which minimize further corrosion.

In reducing atmospheres or air in the range of 870...1180 °C (1598...2156 °F) the thermocouple exhibits a decidedly higher thermoelectric stability than a Type K thermocouple under the same conditions. Also the “K-State“ which occurs in the Type K is almost completely suppressed due to the Silicon content. At higher temperatures in Sulphur containing, reducing or alternately oxidizing and reducing atmospheres suitable protection is still necessary.

The “Green rot“ and “vacuum sensitivity“ phenomena described for the Type K thermocouple do also occur in the Type N, where however, both the Chromium and the Silicon volatilize in vacuum.

Attention: Type K and N **cannot** be exchanged for each other!

Type T (Cu-CuNi)

Defined Temperature Range -270...400 °C (-454...752 °F).

This is one of the oldest thermocouples for low temperature measurements, and is still commonly used in the triple point range for Neon at -248.5939 °C (-415.4690 °F) up to 370 °C (698 °F).

Type T nominally contains Copper compared against a Copper-Nickel alloy. The positive conductor (TP) consists of approx. 99.95 % pure Copper with an Oxygen content of 0.02 to 0.07 % dependent on the Sulphur content of the Copper. The remaining impurities amount to approx. 0.01 % in total. The negative conductor (TN) consists of a Copper-Nickel alloy, also called Constantan with approx. 55 % Copper and 45 % Nickel, as well as approx. 0.1 % each of Cobalt, Iron and Manganese. The TN conductor is identical to and can be interchanged with an EN conductor. It is, however, generally not identical to Type JN conductors.

The Type T thermocouple exhibits good thermoelectric homogeneity. Due to the good heat conductivity of the conductors, problems can occure when used for precision measurements, resulting from heat abstraction, particularly if the conductor diameter is very large. The Type T can be used in vacuum, oxidizing, reducing or inert atmospheres.

It should be noted that above 370 °C (698 °F) the oxidation rate of the TP-conductor increases dramatically. It is not recommended to use the thermocouple in hydrogen containing environments above 370 °C (698 °F) without suitable protection, because the TP-conductor could become brittle.

Type E (NiCr-CuNi)

Defined Temperature Range -270...1000 °C (-454...1832 °F).

The thermocouple has a relatively small heat conductivity, very high resistance in humid atmospheres, good homogeneity, and a relative steep temperature gradient (Seebeck-Coefficient) at extremely low temperatures. For these reasons it has become the most common thermocouple for low temperature measurements. Above 0 °C (32 °F) it has the steepest temperature gradient of all the thermocouples defined in the standard.

Type E nominally consists of a Nickel-Chromium alloy compared against a Copper-Nickel alloy. The materials of the positive conductor (EP) are identical to those already described for the KP-conductor in the Type K, and the negative conductor (EN) is the same as the TN-conductor in the Type T . The Type E thermocouple can be used in a temperature range from -270...1000 °C (-454...1832 °F). For temperatures over 750 °C (1382 °F) the oxidation rate in air for both conductors is high. Since the EP-conductor is identical to the KP-conductor, the same effects of “vacuum sensitivity“, “K-State“ and “Green rot“ already described are also applicable to this thermocouple.

The Type E is essentially insensitive to oxidizing or inert atmospheres. In Sulphur containing, reducing or alternately oxidizing and reducing atmospheres suitable protection is still necessary.

Type	Class 1	Class 2	Class 3
Type R, Type S			
Temperature range	0...1100 °C (32...2012 °F)	0...600 °C (32...1112 °F)	–
Deviation limits	± 1 °C (1.8 °F)	± 1.5 °C (2.7 °F)	–
Temperature range	1100...1600 °C (2012...2912 °F)	600...1600 °C (1112...2912 °F)	–
Deviation limits	±[1+0.003 x (t -1100)] °C ±[1+0.0017 x (t -2000)] °F	± 0.0025 x [t] °C ± 0.0014 x [t] °F	–
Type B			
Temperature range	–	–	600...800 °C (1112...1472 °F)
Deviation limits	–	–	± 4 °C (7.2 °F)
Temperature range	– –	600...1700 °C (1112...3092 °F)	800...1700 °C (1472...3092 °F)
Deviation limits		± 0.0025 x [t] °C ± 0.0014 x [t] °F	± 0.005 x [t] °C ± 0.0028 x [t] °F
Type J			
Temperature range	-40...375 °C (-40...707 °F)	-40...333 °C (-40...631 °F)	–
Deviation limits	± 1.5 °C (2.7 °F)	± 2.5 °C (4.5 °F)	–
Temperature range	375...750 °C (707...1382 °F)	333...700 °C (631...1292 °F)	–
Deviation limits	± 0.004 x [t] °C ± 0.002 x [t] °F	± 0.0075 x [t] °C ± 0.0042 x [t] °F	–
Type K, Type N			
Temperature range	-40...375 °C (-40...707 °F)	-40...333 °C (-40...631 °F)	-167...40 °C(-269...104 °F)
Deviation limits	± 1.5 °C (2.7 °F)	± 2.5 °C (4.5 °F)	± 2.5 °C (4.5 °F)
Temperature range	375..1000 °C (707...1832 °F)	333...1200 °C (631...2192 °F)	-200...-167 °C (-328...-269 °F)
Deviation limits	± 0.004 x [t] °C ± 0.002 x [t] °F	± 0.0075 x [t] °C ± 0.0042 x [t] °F	± 0.015 x [t] °C ± 0.0008 x [t] °F
Type T			
Temperature range	-40...125 °C (-40...257 °F)	-40...133 °C (-40...271 °F)	-67...40 °C(-89...104 °F)
Deviation limits	± 0.5 °C (0.9 °F)	± 1 °C (1.8 °F)	± 1 °C (1.8 °F)
Temperature range	125...350 °C (257...662 °F)	133...350 °C (271...661 °F)	-200...-67 °C (-328...-89 °F)
Deviation limits	± 0.005 x [t] °C ± 0.0028 x [t] °F	± 0.0075 x [t] °C ± 0.0042 x [t] °F	± 0.015 x [t] °C ± 0.0008 x [t] °F
Type E			
Temperature range	-40...375 °C (-40...707 °F)	-40...333 °C (-40...631 °F)	-167...40 °C (-269...104 °F)
Deviation limits	± 1.5 °C (2.7 °F)	± 2.5 °C (4.5 °F)	± 2.5 °C (4.5 °F)
Temperature range	375...800 °C (707...1472 °F)	333...900 °C (631...1652 °F)	-200...-167 °C (-328...-269 °F)
Deviation limits	± 0.004 x [t] °C ± 0.002 x [t] °F	± 0.0075 x [t] °C ± 0.0042 x [t] °F	± 0.015 x [t] °C ± 0.0008 x [t] °F

Tbl. 3-1: Classes and deviation limits for thermocouples acc. to EN 60584 (former IEC 584)

Thermocouples according to DIN 43710

The thermocouples Type U (Cu-CuNi) and Type L (Fe-CuNi) defined in this standard are no longer included in any current national or international standards. This has not precluded the continued use of these thermocouples in many applications. They were not included in EN 60584 or IEC 584, but replaced by the Types J and T.

DIN 43710 recommends that these thermocouples should not be used for any new applications and if existing installations are updated or reworked, the thermocouples should be replaced by Types J and T.

Attention: They cannot simply be exchanged for one another!

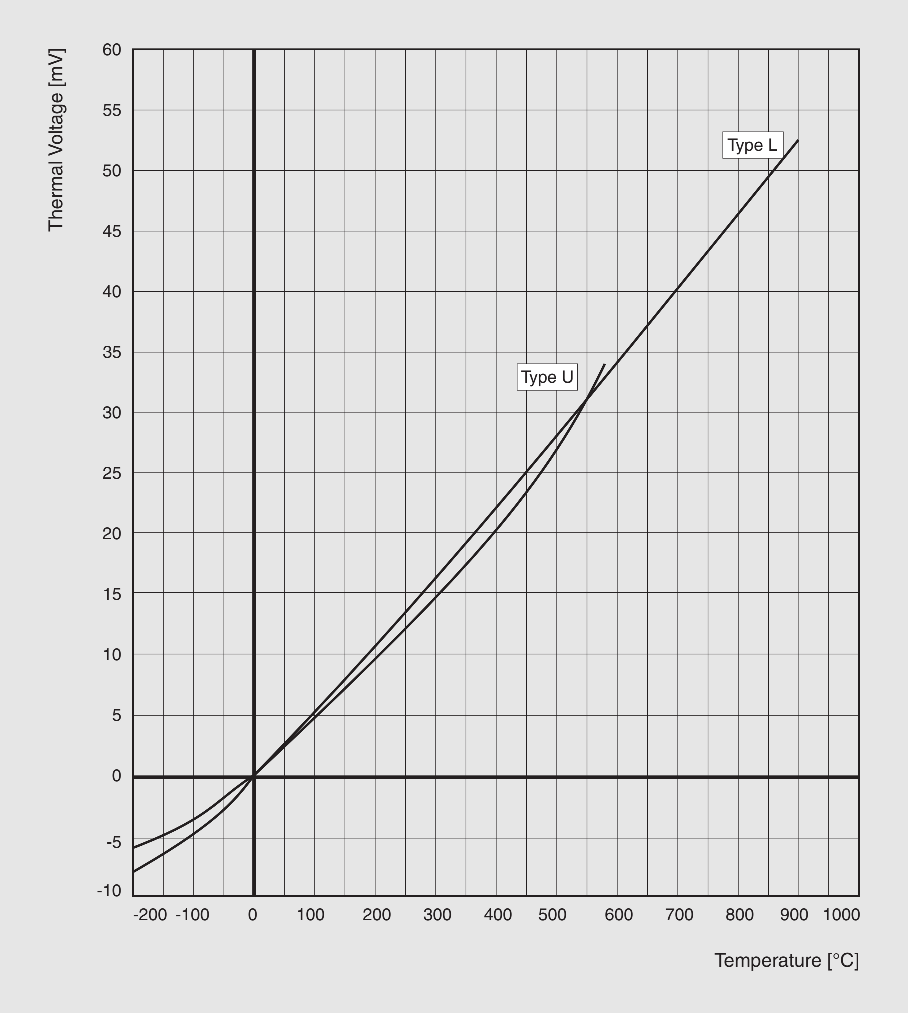

Fig. 3-2: Basic curves for thermocouples according to DIN 43710

Type U Cu-CuNi)

Defined Temperature Range -200...600 °C (-328...1112 °F).

Type U nominally consists of Copper compared against a Copper-Nickel alloy. The positive conductor (UP) is made of the same Copper composition as the positive conductor described for Type T earlier in this section. The negative conductor (UN) is made of a Copper-Nickel alloy (Constantan) with approx. 55 % Copper, approx. 44 % Nickel and approx. 1 % Manganese.

As a result of these very small differences in their compositions, the basic values for the thermal voltages for the Type U are different from those for Type T. The remaining material properties are however essentially the same as those for Type T.

Type L (Fe-CuNi)

Defined Temperature Range -200...900 °C (-328...1652 °F).

Type L nominally consists of Iron compared against a Copper-Nickel alloy. The positive conductor (LP) is made of the same Iron composition as the positive conductor of Type J. The negative conductor (LN) is made of the same Copper-Nickel alloy (Constantan) as the negative conductor of Type U. Therefore the basic values for the thermal voltages for Type L are different from those for Type J. The remaining material properties are however essentially the same as those for Type J.

Type	DIN
Type U	
Temperature range	50...400 °C (122...752 °F)
Deviation limits	± 3 °C (5.4 °F)
Temperature range	400...600 °C (752...1112 °F)
Deviation limits	± 0.0075 x [t] °C ± 0.0028 x [t] °F
Type L	
Temperature range	50...400 °C (122...752 °F)
Deviation limits	± 3 °C (5.4 °F)
Temperature range	400...900 °C (752...1652 °F)
Deviation limits	± 0.0075 x [t] °C ± 0.0028 x [t] °F

Tbl. 3-2: Classes for the deviation limits for thermocouples according to DIN 43710

Non-Standard Thermocouples

In addition to the standardized thermocouples, there is a whole set of non-standard thermocouples for special applications, whose basic values are not included in any current standard. The basic values for these thermocouples must be established by the manufacturer using individual calibrations.

The most well known include:

Iridium-Iridium rhodium (Ir-Ir40%Rh)

For laboratory measurements in neutral or weak oxidizing atmospheres at temperatures to 2000 °C (3632 °F). The thermocouple consists of very brittle cold rolled steel wires which may not be bent. They are insulated using capillary tubes made of pure Aluminum oxide (Al_2O_3). The thermal voltage is approx. 10 mV at 2000 °C (3632 °F).

Tungsten-Tungsten Rhenium (W-W26%Rh),
Tungsten Rhenium-Tungsten Rhenium (W5%Rh-W26%Rh) and
Tungsten Rhenium-Tungsten Rhenium (W3%Rh-W25%Rh)
These thermocouples, identified in the USA by the letters “G“, “C“ and “D“, are designed for use in high vacuums and for inert gases to 2320 °C (4200 °F).
The thermal voltage is at 2320 °C (4208 °F) for W-W26%Rh approx. 38.6 mV, for W5%Rh-W26%Rh approx. 37.1 mV and for W3%Rh-W25%Rh approx. 39.5 mV.

Pallaplath® (Pt5%Rh-Au46%Pd2%Pt)
This thermocouple can be used to 1200 °C (2192 °F) in air, but is not suitable for environments containing Silicon or Carbon. It combines the stability of a precious metal with the high thermal voltages of a base metal thermocouple. The thermal voltage is approx. 55.4 mV at 1200 °C (2192 °F).

Gold Iron-Chromium (AuFe-Cr)
This thermocouple is used primarily for low temperature measurements in a range from -270...-200 °C (-454...-328 °F). At -270 °C (-454 °F) the thermal voltage is approx. 4.7 mV.

3.1.2 Mineral Insulated Thermocouple Cables

Mineral insulated thermocouple cables have an outer sheath made of metal and for any one design, 2...6 internal wires made of a thermal material. The insulation consists of highly compressed metal oxide powder, preferably Magnesium oxide MgO, or Aluminum oxide Al_2O_3.

They are used where particularly high mechanical, electrical and chemical stability is required. Because they are readily bendable, these cables are preferred where problematic space requirements exist and a flexible installation is desired, e.g. in machine building, laboratories and experimental test facilities.

The minimum bending radius is approx. 3 x outside diameter of the cable. As a result of the development of economical manufacturing processes, sheathed cables are finding more and more applicability as an essential part for the production of standard thermocouples, especially in the industrial measurement and control sector as well as for automotive sensors.

Due to the metallic outer sheath, these thermocouples are essentially unaffected by field induced electromagnetic interference (EMI), provided that they are grounded correctly.

Insulation and Insulation Resistance

The achievable insulation resistance is a function of the purity of ceramic insulation material. Aside from the standard material MgO with a purity of > 97 %, also MgO with a purity of 99.4 % and Al_2O_3 can be used. Since these oxides are highly hygroscopic, care must be exercised when handling the cable. After removing the sealing or cutting the cable, it has to be dried properly. Afterward the open ends have to be immediately sealed against moisture entry. Storing for any length of time with open ends must be avoided.

Since the insulation material of the mineral insulated thermocouple cables and mineral insulated thermocouples has a low rest conductivity, the insulation resistance decreases as the length of the cable or thermocouple increases. Therefore a length related resistance with the units Ω x m or MΩ x m is specified.

For lengths less than 1 m the insulation resistance is specified independent of the length. Based on EN 61515 the insulation resistance must be tested with a voltage of 75 ±25 V DC for outside diameters ≤ 1.5 mm and with 500 ±50 V DC for outside diameters >1.5 mm.

	Insertion depth at test temperature min. m (ft.)	**Test temperature** °C (°F)	**Insulation resistance min.** MΩ x m
Ambient temperature	1 (3)	20 ±15 (68 ±27)	1000
Increased temperature Types J, K, N, E	0.5 (1.5)	500 ±15 (932 ±27)	5
Increased temperature Type T	0.5 (1.5)	300 ±15 (572 ±27)	500

Tbl. 3-3: Minimum insulation resistance of mineral insulated thermocouple cables according to EN 61515

	Length of Thermo-couple m (ft.)	**Insertion depth at test temperature** m (inch)	**Test temperature** °C (°F)	**Insulation resistance min.** MΩ x m	**Insulation resistance min.** MΩ
Ambient temperature	≥ 1 (3)	Total length	20 ±15 (68 ±27)	1000	–
Ambient temperature	< 1 (3)	Total length	20 ±15 (68 ±27)	–	1000
Increased temperature Types J, K, N, E	All lengths	50 % of the total length max. 0.3 (1)	500 ±15 (932 ±27)	–	5
Increased temperature Type T	All lengths	50 % of the total length max. 0.3 (1)	500 ±15 (932 ±27)	–	500

Tbl. 3-4: Minimum insulation resistance of mineral insulated thermocouples with insulated measurement spot locations according to EN 61515

It should be noted when using mineral insulated thermocouples that the insulation resistance of the insulating ceramic decreases appreciably with increasing temperatures. When longer lengths of the sheath material are exposed to high temperatures, measurement errors could result due to shunt currents or cross talk between adjacent measurement installations along the length of the cable.

Sheath Materials

Basically, mineral insulated thermocouple cables could be made of materials sufficiently ductile, preferred however, are those made entirely of austenitic stainless steel.

Nickel alloys are also useful for special applications. Though not all sheath material/thermocouple combinations are possible, e. g., for high heat resistant sheath materials the required intermediate annealing temperatures required for processing may, in part, be appreciably above the allowable temperature limits for the thermocouple materials. The most common sheath materials are:

1.4541 (corresponds to AISI 321)

Max. operating temperature: 800 °C (1472 °F).
Application areas: Nuclear plants and reactor construction, chemical system engineering, heat treating furnaces, heat exchangers, paper and textile industries, petrochemical and petroleum industries, lubricant and soap industries.
Material properties: Good intercrystalline corrosion resistance, also after welding. Good resistance against crude oil products, steam and combustion gases. Good oxidation resistance. Good welding properties for all standard welding processes, no subsequent heat treatment required after welding, good ductility.

1.4571 (corresponds to AISI 316 TI)

Max. operating temperature: 800 °C (1472 °F)
Application areas: Nuclear plants and reactor construction, chemical system engineering, furnace manufacture, chemical and pharmaceutical industries.
Material properties: Increased corrosion resistance to specific acids due to the addition of Molybdenum. Resistant against pitting, salt water and aggressive industrial influences. Good welding properties for all standard welding processes, no subsequent heat treatment required after welding, good ductility.

1.4749 (corresponds to AISI 446)

Max. operating temperature: 1150 °C (2102 °F)

Application areas: Petrochemical industries, metallurgy, energy technologies and for recuperators, heat treatment ovens, systems for controlling fluidized bed coatings, waste incineration plants.

Material properties: Extremely good resistance against reducing atmospheres containing Sulphur. Very good resistance against oxidation and air. Good resistance against corrosion by combustion products, Copper, Lead- and Tin melting. Good welding properties for applications using arc or WIG welding. Preheating to 200...400 °C (392... 752 °F) is recommended. Subsequent heat treatment is not required.

1.4841 (corresponds to AISI 314)

Max. operating temperature: 1150 °C (2102 °F)

Application areas: Steam boilers and blast furnaces, cement and tile ovens, glass manufacture, petroleum and petrochemical industries, furnace manufacture, power plants.

Material properties: Exceptional corrosion resistance, even at high temperatures. Suitable for Carbon and Sulphur containing atmospheres. Air oxidation resistance to 1000 °C (1832 °F) (batch operation) or 1150 °C (2102 °F) (continuous operation). Very good for higher alternating temperature changes. Long term continuous operation is not recommended for temperature ranges from 425...850 °C (797...1562 °F). Good welding properties for applications using arc welding. Subsequent heat treatment is not required. Good ductility in the as received condition. After longer use some slight brittleness can be expected.

1.4845 (corresponds to AISI 310 S)

Max. operating temperature: 1100 °C (2012 °F)

Application areas: Steam boilers and blast furnaces, cement and tile ovens, glass manufacture, petroleum and petrochemical industries, furnace manufacture, power plants.

Material properties: Good resistance against oxidation and sulfidization. Due to the high Chromium content resistant to oxidizing aqueous solutions as well as good resistance against Chlorine induced stress crack corrosion. Good resistance in Cyanide melters and neutral fused salt at high temperatures. Not sensitive to “Green rot“. Readily weldable. It is recommended that heat be added during welding. When intercrystalline corrosion may occur, solution heat treat after welding.

1.4876 (corresponds to Incolloy 800®)

Max. operating temperature: 1100 °C (2012 °F) in air

Application areas: power plants, petroleum and petrochemical industries, furnace manufacture.

Material properties: Due to the admix of Titanium and Aluminum the material has especially good heat resistance. Suitable for applications, where highest loading is required. Resistant to scale. Exceptionally stable where carburization and nitration can be expected. Good welding properties for applications using arc or TIG welding. Subsequent heat treatment is not required.

2.4816 (corresponds to Inconel 600®)
Max. operating temperature: 1100 °C (2012 °F)
Application areas: Pressurized water reactors, nuclear power plants, furnace manufacture, plastic industry, heat tempering, paper and food industries, steam boilers, airplane engines.
Material properties: Good general corrosion resistance, resistant to stress crack corrosion. Exceptional oxidation resistance. Not recommended for CO_2 and Sulphur containing gases above 550 °C (1022 °F) and Sodium above 750 °C (1382 °F). Stable in air to 1100 °C (2012 °F). Good welding properties for all welding techniques. The material should be annealed before welding. Subsequent heat treatment is not required. Exceptional ductility even after long term use.

Platinum 10% Rhodium
Max. operating temperature: 1300 °C (2372 °F)
Application areas: Glass, electrochemical and catalytic technology, chemical industry, laboratory applications, melting, annealing and firing ovens.
Material properties: High temperature resistance to 1300 °C (2372 °F) under oxidizing conditions. In the absence of Oxygen, Sulphur, Silicon, high heat resistance to 1200 °C (2192 °F). Especially resistant to halogens, acetic acid, NaOCl solutions etc. Embrittlement due to absorption of Silicon from sheath ceramics. Sulphur eutectic formation possible above 1000 °C (1832 °F). Phosphorous sensitivity.

3.1.3 Thermocouple Wires and Compensating Cables

It is often necessary to locate the reference junction of the thermocouple at a great distance from the measurement site due to safety concerns or constructional reasons.

In other instances the measurement circuit installation is fixed and the actual thermocouple is designed as a measuring inset so that it can easily be exchanged. Also, for cost reasons, especially for precious metal thermocouples it is economical to use another, less costly material for the reference junction. In this case, an interconnection cable is used between the actual thermocouple and the reference junction, which over a restricted temperature range has the same thermoelectrical properties as the corresponding thermocouple. These “connector links“ are the thermocouple and compensating cables. The application range for these cables is limited in most national and international standards to a temperature range of -25 °C (-13 °F) to 200 °C (392 °F), or is dependent on the temperature resistance of the insulation material used. The insulation material itself is to be selected so that the requirements at the “local site“, including chemical and heat resistance, moisture protection etc. are satisfied.

Concepts

Thermal cables are made of thermal wires or braid conductors, which have the same nominal composition as the corresponding thermocouple. Compensating cables are made of substitute materials (other alloys than those for the thermocouple), but having the same thermoelectrical properties over a limited temperature range. Since the agreement of the thermal voltage of the particular thermocouple is based on the compensating pair and not on its individual wire, there may not be any temperature differences at the transition locations between the legs of the thermocouple. Otherwise parasitic thermal voltages will produce measurement errors.

The allowable deviation limits for the thermocouple or compensating cables limit the additional deviations which may be added in the measurement circuit of such a cable in microvolts.

Thermocouple Wires and Compensating Cables according to EN 60584-3/DIN 43722

Since 1994 EN 60584-3 has been accepted by all the industrial countries worldwide. DIN 43722 is the minimally modified German version of IEC 584-3: 1989.

Short Designation:
Thermocouple wires (original material) are identified by the letter X (X stands for e**X-**tension), which is added after the code letter for the thermocouple, for example: JX. Compensation cables (substitute material) are identified by the letter C (C stands for **C**ompensating), which is added after the code letter for the thermocouple, for example: KC.
Since for some thermocouples, additional substitute materials are used, they must be identified by an additional letter for differentiation, for example: KCA and KCB.

Color Identification:
The color for the negative conductor for all thermocouple types is white, the positive conductor corresponds to specifications in the following table.

Type of thermocouple	Color of positive conductor and sheath	Color of negative conductor
S	orange	white
R	orange	white
B	gray	white
J	black	white
K	green	white
N	pink	white
T	brown	white
E	violet	white

Tbl. 3-5: Color code for thermocouple wires and compensating cables according to DIN 43722

The outer sheath, if present, has the same color code as the positive conductor. An exception are the connection wires for Intrinsically Safe circuits, for which the color code is blue for all thermocouple types. If the thermocouple or compensating cables have a plug connector, then it must be identified with the same color code as the positive conductor or sheath. The entire connection plug is to colored, or alternatively, a color dot can be applied to its outer surface.

Deviation Limits:

The allowable deviations listed in the table below (in microvolts) for thermocouple wires and compensating cables for the allowable temperature ranges. The deviations in brackets are the equivalent deviations expressed in (°C/°F) when the meter location of the entire measurement circuit (thermocouple with connected thermocouple wires or compensating cable) is also at the same temperature.

Type of thermo-couple	Type of cable	Deviation limit Class 1	Deviation limit Class 2	Applicable temperature range	Temp. at the measurement location
J	JX	±85 µV (±1.5 °C/±2.7°F)	±140 µV (±2.5 °C /±4.5 °F)	-25...200 °C (-13...392 °F)	500 °C (932 °F)
T	TX	±30 µV (±1.5 °C/±2.7 °F)	±60 µV (±1.0 °C /±1.8 °F)	-25...100 °C (-13...212 °F)	300 °C (572 °F)
E	EX	±120 µV (±1.5 °C/±2.7 °F)	±200 µV (±2.5 °C /±4.5 °F)	-25...200 °C (-13...392 °F)	500 °C (932 °F)
K	KX	±60 µV (±1.5 °C/±2.7 °F)	±100 µV (±2.5 °C /±4.5 °F)	-25...200 °C (-13...392 °F)	900 °C (1652 °F)
N	NX	±60 µV (±1.5 °C/±2.7 °F)	±100 µV (±2.5 °C /±4.5 °F)	-25...200 °C (-13...392 °F)	900 °C (1652 °F)
K	KCA	–	±100 µV (±2.5 °C /±4.5 °F)	0...150 °C (32...302 °F)	900 °C (1652 °F)
K	KCB	–	±100 µV (±2.5 °C /±4.5 °F)	0...100 °C (32...212 °F)	900 °C (1652 °F)
N	NC	–	±100 µV (±2.5 °C /±4.5 °F)	0...150 °C (32...302 °F)	900 °C (1652 °F)
R	RCA	–	±30 µV (±2.5 °C /±4.5 °F)	0...150 °C (32...302 °F)	1000 °C (1832 °F)
R	RCB	–	±60 µV (±5.0 °C /±9 °F)	0...200 °C (32...392 °F)	1000 °C (1832 °F)
S	SCA	–	±30 µV (±2.5 °C /±4.5 °F)	0...100 °C (32...212 °F)	1000 °C (1832 °F)
S	SCB	–	±60 µV (±5.0 °C /±9 °F)	0...200 °C (32...392 °F)	1000 °C (1832 °F)
B	BC	–	±40 µV (±3.5 °C /±6.3 °F)	0...100 °C (32...212 °F)	1400 °C (2552 °F)

Tbl. 3-6: Deviation limits for thermocouple wires and compensating cables classes according to DIN 43722

3.1.4 Older National Standards

For many of the cables described in older standards, national or international basic values do not exist, yet these products are installed in many systems worldwide. For new installations and when updating existing systems, only the thermocouple and compensating cables according to IEC 584-3: 1989 or DIN 43722 described in the previous sections should be used. The best known still being used, but no longer being updated in the national standards are:

Compensating Cables according to DIN 43713 / DIN 43714

Short Designation:
In DIN 43713 / DIN 43714 a differentiation was not made between compensating and thermocouple wires. All cables are designated as compensating cables and identified by the abbreviation AGL followed by the text “DIN 43714“ and the nominal composition of the corresponding thermocouple, for example: AGL DIN 43714 Fe-CuNi.

Color Code:
The color code for the insulation of positive conductor for all thermocouple types is red, for the negative conductor the color codes are listed in the table below:

Type of thermocouple	Color of positive conductor	Color of negative conductor and sheath
S	red	white
R	red	white
L	red	dark blue
K	red	green
U	red	brown

Tbl. 3-7: Color codes for compensating cables according to DIN 43714

The outer sheath, if present, has the same color code as that listed in the above table. An exception are those cables for Intrinsically Safe circuits, for which the color code is always light blue for all thermocouple types which also includes a stripe or tracer thread with the color for the particular negative conductor.

Deviation Limits:
The allowable deviations (in °C / °F) are listed in the table below for the compensating cables with the allowable operating temperature ranges.

Type of thermocouple	Type of cable	Allowable deviation limit	Operating temperature range
Cu-CuNi (U)	Cu-CuNi	± 3.0 °C (± 5.4 °F)	0...200 °C (32...392 °F)
Fe-CuNi (L)	Fe-CuNi	± 3.0 °C (± 5.4 °F)	0...200 °C (32...392 °F)
NiCr-Ni (K)	NiCr-Ni	± 3.0 °C (± 5.4 °F)	0...200 °C (32...392 °F)
NiCr-Ni (K)	SoNiCr-SoNi1	± 3.0 °C (± 5.4 °F)	0...200 °C (32...392 °F)
NiCr-Ni (K)	SoNiCr-SoNi2	± 3.0 °C (± 5.4 °F)	0...100 °C (32...212 °F)
Pt10%Rh-Pt (S)	SoPtRh1-SoPt1	± 3.0 °C (± 5.4 °F)	0...200 °C (32...392 °F)
Pt10%Rh-Pt (S)	SoPtRh2-SoPt2	± 3.0 °C (± 5.4 °F)	0...100 °C (32...212 °F)
Pt13%Rh-Pt (R)	SoPtRh1-SoPt1	± 3.0 °C (± 5.4 °F)	0...200 °C (32...392 °F)
Pt13%Rh-Pt (R)	SoPtRh2-SoPt2	± 3.0 °C (± 5.4 °F)	0...100 °C (32...212 °F)

Tbl. 3-8: Deviation limits according to DIN 43710 for compensating cables acc. to DIN 43713

Thermocouples and Compensating Cables according to ANSI-MC96.1 (USA)

Short Designation:
In ANSI-MC96.1 a differentiation was not made between compensating and thermocouple cables. All cables were identified the same by the code letter X, added after the code letter for the thermocouple, for example: EX.

Color Code:
The color code for the insulation of the negative conductor for all thermocouple types is red, for the positive conductor the color codes are listed in the table below:

Type of thermocouple	Color of sheath	Color of positive conductor	Color of negative conductor
S	green	black	red
R	green	black	red
B	gray	gray	red
J	black	white	red
K	yellow	yellow	red
T	blue	blue	red
E	violet	violet	red

Tbl. 3-9: Color codes for thermocouple wires and compensating cables according to ANSI-MC96.1

The outer sheath, if present, has the same color code as those listed in the above table.

Deviation Limits:
The allowable deviations listed in the table below (in microvolts and °C / °F) for thermocouple and compensating cables for the allowable operating temperature ranges.

Type of thermocouple	Type of cable	Deviation limit Classes		Operating temperature range
		special	standard	
E	EX	–	±1.7 °C (±3.06 °F)	0...200 °C (32...392 °F)
J	JX	±1.1 °C (±1.98 °F)	±2.2 °C (±3.96 °F)	0...200 °C (32...392 °F)
K	KX	–	±2.2 °C (±3.96 °F)	0...200 °C (32...392 °F)
T	TX	±0.5 °C (±0.9 °F)	±1.0 °C (±1.98 °F)	0...100 °C (32...212 °F)
R	SX	–	± 57 µV	0...200 °C (32...392 °F)
R	SX	–	± 57 µV	0...200 °C (32...392 °F)
S	SX	–	± 57 µV	0...200 °C (32...392 °F)
S	SX	–	± 57 µV	0...200 °C (32...392 °F)
B	BX	–	+ 0 µV/-33 µV	0...100 °C (32...212 °F)

Tbl. 3-10: Deviation limits for thermocouple wires and compensating cable classes according to ANSI-MC96.1

Thermocouple Wires and Compensating Cables according to NF C 42-324 (France)

Short Designation:
In NF C 42-324 a differentiation is made between thermocouple wires and compensating cables (Câble de Extension et Câble de Compensation), but a compensating cable can also be a thermocouple, which may differ from the thermocouple because its composition has a lower thermoelectric quality (tolerance). That means that the compensating cables may or may not be identical to the thermocouple.
The thermocouple wires are identified by the code letter X added after the code letter for the thermocouple, for example: JX.
Compensating cables are identified by the code letter C added after the code letter for the thermocouple, for example: KC.

Color Code:
The color code for the insulation of the positive conductor for all thermocouple types is yellow, for the negative conductor the color codes are listed in the table below.
The outer sheath, if present, is identified by the color codes listed in the table below.

Type of thermocouple	Thermo-couple wire	Compensating cable	Color of positive conductor	Color of negative conductor and sheath
S	–	SC	yellow	green
R	–	SC	yellow	green
B	–	BC	yellow	gray
J	JX	JC	yellow	black
K	KX	KC	yellow	violet
K	–	VC	yellow	brown
K	–	WC	yellow	white
T	TX	TC	yellow	blue
E	EX	EC	yellow	orange

Tbl. 3-11: Color codes for thermocouple wires and compensating cables according to NF C 42-324

Deviation Limits:

The allowable deviations listed in the table below in °C (°F) for thermocouple and compensating cable for the allowable operating temperature ranges.

Temperature range	TX	JX	EX	KX
-25...250 °C (-13...482 °F)	±0.5 °C (±0.9 °F)	±1.5 °C (±2.7 °F)	±1.5 °C (±2.7 °F)	±1.5 °C (±2.7 °F)

Tbl. 3-12: Deviation limits for thermocouple wires according to NF C 42-324

Temperature range	TC	JC	EC	KC	VC	WC	SC	BC
-25...100 °C (-13...212 °F)	±1.0 °C (±1.8 °F)	±3.0 °C (±5.4 °F)	±3.0 °C (±5.4 °F)	±3.0 °C (±5.4 °F)	±3.0 °C (±5.4 °F)	±3.0 °C (±5.4 °F)	±7.0 °C (±12.6 °F)	±4.0 °C (±7.2 °F)
100...200 °C (212...392 °F)	–	±3.0 °C (±5.4 °F)	±3.0 °C (±5.4 °F)	±3.0 °C (±5.4 °F)	–	±3.0 °C (±5.4 °F)	±7.0 °C (±12.6 °F)	±4.0 °C (±7.2 °F)
200...250 °C (392...482 °F)	–	±3.0 °C (±5.4 °F)	±3.0 °C (±5.4 °F)	–	–	–	–	–

Tbl. 3-13: Deviation limits for compensating cables according to NF C 42-324

3.1.5 Measurement Resistors

When making temperature measurements using measurement resistors the electrical resistance of a sensor subjected to the temperature is the variable utilized.

The temperature dependence of the electrical resistance of metals, semiconductors and ceramics is used as the measurement value. The materials are divided into two groups based on the slope of the curve: NTC- and PTC-sensors.

PTC-sensors are materials whose resistance increases as the temperature increases (**p**ositive **t**emperature **c**oefficient) or “cold wire“. Included are the metallic conductors which are used in the manufacture of the measurement resistors described below.

NTC-sensors (**n**egative **t**emperature-**c**oefficient) or “hot wire“ are usually semiconductor or ceramic sensors, which are usually installed for specific requirements and temperatures.

Materials for Measurement Resistors

The are a number of requirements which must be met for the materials used as temperature sensors in order that good and reproducible measurements can be made.

- Large temperature coefficient,
- Minimal sensitivity to environmental effects (corrosion, chemical attack),
- Wide measurement range,
- Interchangeability,
- Long term stability,
- Easily processed.

For industrial temperature measurement technology, Platinum is the most used material for the resistors followed by Nickel.

It is for this reason that both of these materials will be described in detail in the following.

The Platinum measurement resistors with a nominal value of 100 Ω (Pt100) has become established in recent years as the industrial standard.

Nominal Values

The resistors are identified by the resistance at 0 °C (32 °F) (nominal value). Ni100 and Pt100 the most common types have a resistance of 100 Ω at 0 °C (32 °F), Pt500 or Pt1000 have 500 or 1000 Ω respectively at 0 °C (32 °F).

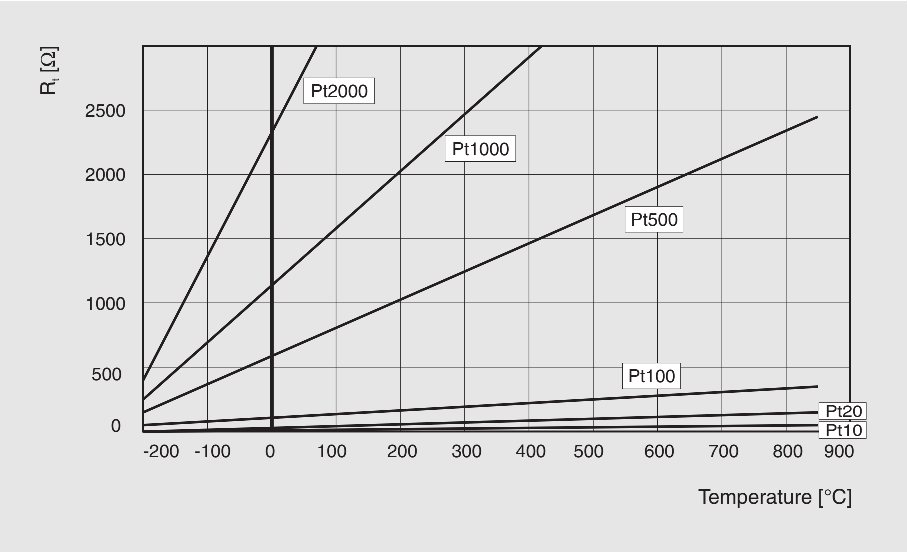

Fig. 3-3: Resistance R_t relationship to temperature for Platinum measurement resistors with different nominal values

Temperature Coefficient (Tc)

More precisely stated, the temperature coefficient of the electrical resistance. It defines the change in electrical resistance between two temperatures, usually between 0 °C and 100 °C (32 °F and 212 °F) with the units:

$$\frac{\Omega}{\Omega \cdot K} \text{ which is therefore dimensionless } \frac{1}{K}$$

For smaller temperature ranges a linear relationship can be assumed:

$$R_t = R_0\left[1+\alpha\left(t - t_0\right)\right]$$

with $\alpha = \dfrac{R_{100} - R_0}{R_0 \cdot 100^\circ C}$

Where:

t: Temperature in °C
t_0: Reference temperature (e.g. 0°)
R_t: Resistance at temperature t in Ω
R_0: Nominal resistance at 0 °C in Ω
α: Average temperature coefficient between 0 °C and 100 °C (32 °F and 212 °F) in K^{-1}

Platinum Material

Its advantages include very pure producability, high chemical resistance, easy manufacturability, good reproducibility of the electrical properties and a wide application range between -250 °C and 850 °C (-418 °F and 1562 °F).

The temperature coefficient of spectral pure Platinum is 0.003925 K^{-1} and is different than the value required for Pt-measurement resistors. The Platinum used for industrial Platinum temperature resistors is selectively produced.

Specified in EN 60751 for the Platinum sensors, among others, are the temperature relationship to the resistance, the nominal value, the allowable deviation limits and the temperature range.

Measurement Characteristics of Platinum

Simplified:

It the range from 0...100 °C (32...212 °F) Platinum has a temperature coefficient of 0.00385 K^{-1}, i. e. a Pt100 measurement resistor at 0 °C (32 °F) has a resistance of 100 Ω and at 100 °C (212 °F) 138.5 Ω.

Expanded:

By definition the basic values are divided into two different temperature ranges:

For -200...0 °C (-328...32 °F) a third order polynomial applies

$$R_t = R_0\left[1 + A \cdot t + B \cdot t^2 + C \cdot \left(t - 100^\circ C\right) \cdot t^3\right]$$

For the range from 0...850 °C (32...1562 °F) a second order polynomial applies

$$R_t = R_0\left[1 + A \cdot t + B \cdot t^2\right]$$

The coefficients according to EN 60751 are:

$A = 3.9083 \cdot 10^{-3}\,K^{-1}$
$B = -5.775 \cdot 10^{-7}\,K^{-2}$
$C = -4.183 \cdot 10^{-12}\,K^{-4}$

For temperatures above 0 °C (32 °F) the relationship between the temperature an the resistance can be described by the equation:

$$t = -\frac{A}{2 \cdot B} - \sqrt[2]{\left(\frac{A}{2 \cdot B}\right)^2 + \frac{R_t - R_0}{R_0 \cdot B}}$$

in which the resistance values for the basic value tables in EN 60751 are listed for temperature in steps of 1 K.

For the sensitivity, i.e. the resistance change according to K, for temperatures <0 °C (32 °F):

$$\frac{\Delta R}{\Delta t} = R_0\left(A + 2 \cdot B \cdot t - 300^\circ C \cdot t^2 + 4 \cdot C \cdot t^3\right)$$

For temperatures above 0 °C (32 °F) the following applies:

$$\frac{\Delta R}{\Delta t} = R_0\left(A + 2 \cdot B \cdot t\right)$$

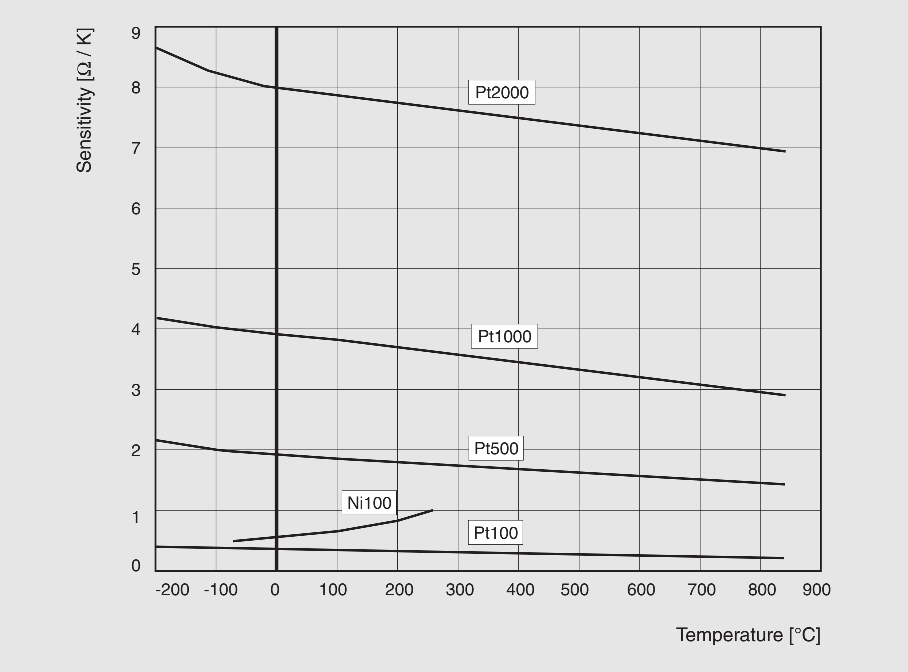

Fig. 3-4: Sensitivity dR/dT for Ni100 and Platinum measurement resistors with dIfferent nominal values

Tolerance Classes for Platinum

According to EN 60751 the Platinum resistance thermometers the deviation limits Δt are divided into two tolerance classes:

Class A: $$\Delta t = \pm\left(0.15\,^{\circ}\mathrm{C} + 0.002 \cdot |t|\right)$$

Class B: $$\Delta t = \pm\left(0.30\,^{\circ}\mathrm{C} + 0.005 \cdot |t|\right)$$

Tolerance designation	Temperature range	Tolerance in K	Deviation limit at 0 °C (32 °F)			
				resistance		
			Temperature	R_0 = 100 Ω	R_0 = 500 Ω	R_0 = 1000 Ω
Class A	-200...650 °C (-328...1202 °F)	±(0.15 K+0.002 · [t])	±0.15 K	±0.06 Ω	±0.29 Ω	±0.59 Ω
Class B	-200...850 °C (-328...1562 °F)	±(0.30 K+0.005 · [t])	±0.30 K	±0.12 Ω	±0.59 Ω	±1.17 Ω
			Deviation limit at 100 °C (212 °F)			
Class A			±0.35 K			
Class B			±0.80 K			

Tbl. 3-14: Deviation limit according to EN 60751 and expanded deviation limit

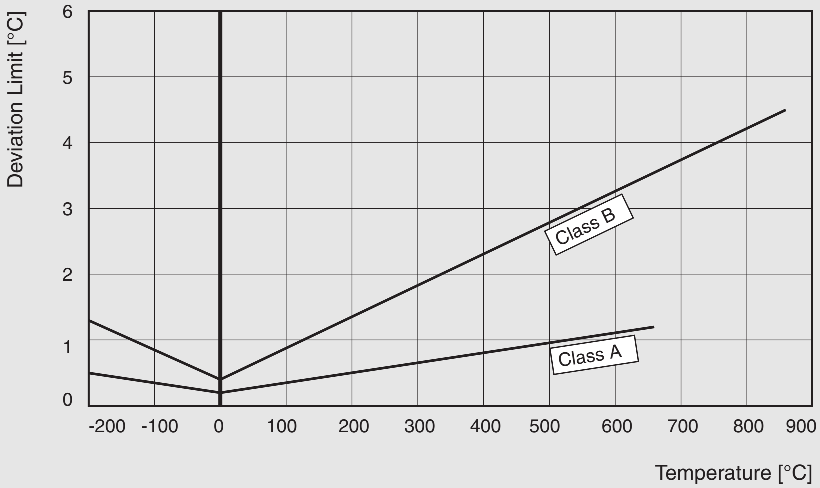

Fig. 3-5: Deviation limit for Platinum resistance thermometers in °C

Nickel Material

It is appreciably less expensive than Platinum. Its temperature coefficient is almost twice as high, but it has a decidedly poorer chemical resistance. The measurement range is limited to only -60...250 °C (-76...482 °F) and the allowable deviation limits are greater than for Platinum. The Nickel measurement resistors are standardized in DIN 43760.

Measurement Characteristics of Nickel

Simplified:

In the range from 0...100 °C (32...212 °F) Nickel has a temperature coefficient of 0.00618 K^{-1} i.e. the measurement resistor Ni100 at 0 °C (32 °F) has a resistance of 100 Ω and at 100 °C (212 °F) 161.85 Ω.

Expanded:

The relationship between the resistance and temperature for Nickel in a temperature range -60...250 °C (-76...482 °F) is:

$$R_t = R_0\left(1 + A \cdot t + B \cdot t + C \cdot t^4 + D \cdot t^6\right)$$

where

$A = 0.5485 \cdot 10^{-2}\ K^{-1}$

$B = 0.665 \cdot 10^{-5}\ K^{-2}$

$C = 2.805 \cdot 10^{-11}\ K^{-4}$

$D = -2 \cdot 10^{-17}\ K^{-6}$

According to DIN 43 760 the nominal value is 100.00 Ω (therefore: Ni100). Additionally, resistors with R_0 = 10 Ω, 1000 Ω or 5000 Ω are also manufactured.

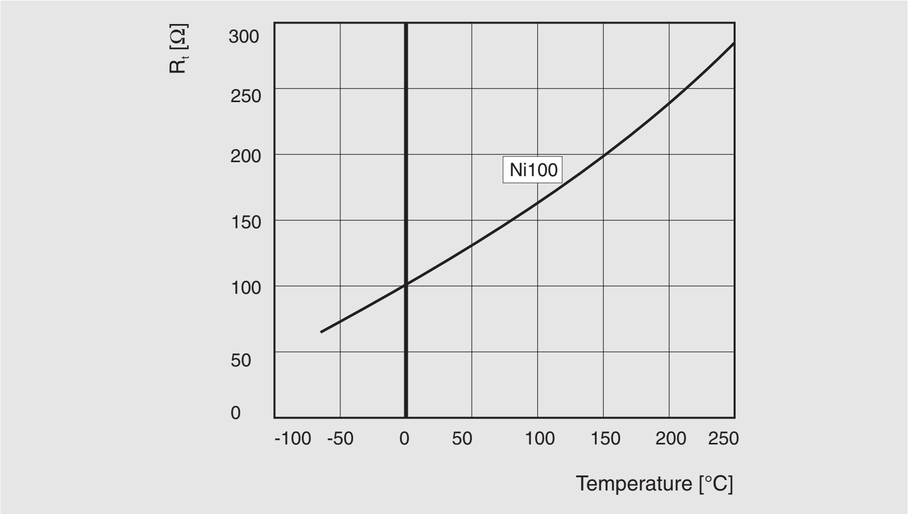

Fig. 3-6: Relationship of the resistance R_t to the temperature for Ni100

In the standard the maximum allowable deviation limits Δt for Nickel resistors are defined by:

$$\Delta t = \pm\left(0.4\,°C + 0.007 \cdot |t|\right) \qquad \text{for 0...250 °C (32...482 °F)}$$

$$\Delta t = \pm\left(0.4\,°C + 0.028 \cdot |t|\right) \qquad \text{for -60...0 °C (-76...32 °F)}$$

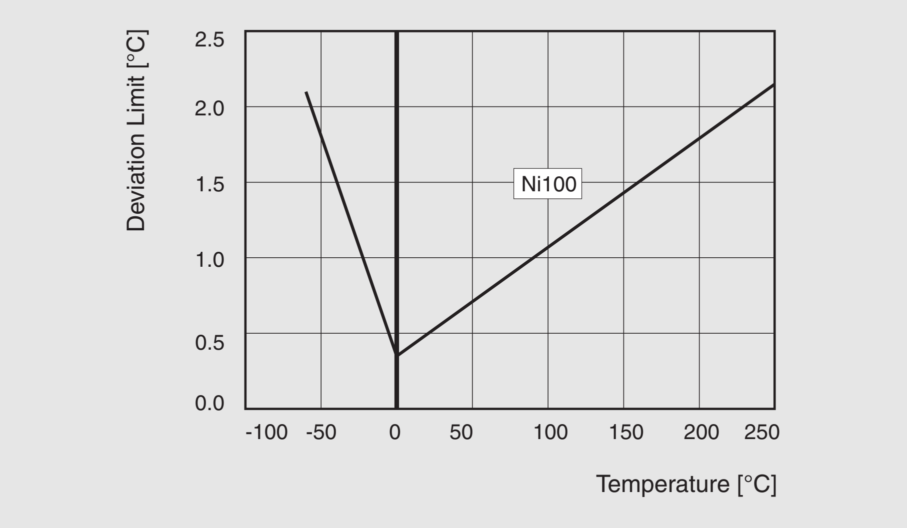

Fig. 3-7: Maximum deviation limit in °C for Ni100

Nickel resistors are often found in the heating, ventilating and air conditioning sectors.

Measurement Resistor Designs

Only Platinum measurement resistors will be discussed in the following. They are divided into two categories, thin film and wire-wounded resistors. Ceramic, glass or plastic are used as the basic carrier materials.

Thin Film Resistors

The measurement coil is made of Platinum wires with diameters between 10 µm and 50 µm.

Wire-wounded Resistors

A precisely adjusted Platinum coil with connections leads is located in a ceramic double capillary. Glass frit powder is packed into the holes of the capillaries. Both ends of the ceramic body are sealed with glass frit. After the glass frit is melted the Platinum coil and the connection leads are fixed in place.

In another design, the Platinum coil is not placed in the holes of a ceramic cylinder, but is placed in a slot in the ceramic body. The outside dimensions are between 0.9 mm and 4.9 mm (0.035” and 0.20”) with lengths between 7 mm and 32 mm (0.28” and 1.25”).
Typical applications: demanding measurement and control requirements in the process industries and laboratory applications.

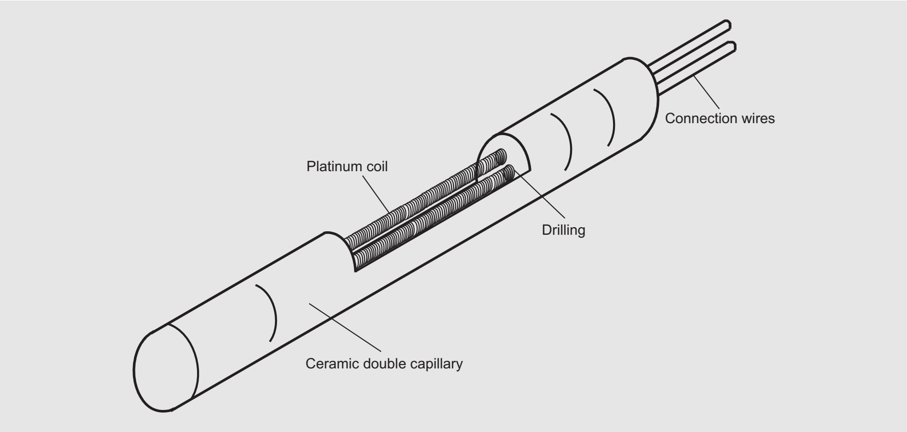

Fig. 3-8: Ceramic wire-wounded resistor

Glass Measurement Resistors

In this design the measurement coil is wound in a bifilar configuration on a glass rod and melted into the glass and the connection wires attached. After it is adjusted, a thin wall glass tube is placed over measurement coil and both elements fused together. The geometric dimensions of the diameter are between 0.9...5.0 mm (0.035”...0.20”) with lengths varying between 7...60 mm (0.275”...2.35”).
Typical applications: chemical system engineering.

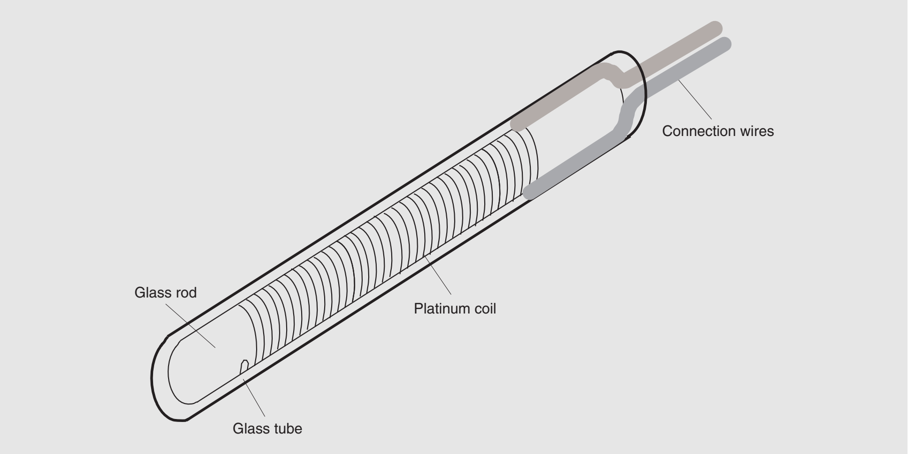

Fig. 3-9: Glass measurement resistor

Slot Resistance Thermometer

The Platinum measurement winding is placed stress free in a slot in a plastic band and connection leads attached stress free. The insulation body is surrounded, including the cable exit by shrinkable tubing. The geometric dimensions for the width can vary between 8 mm (0.31”) and 12 mm (0.5”), lengths between 63 mm and 250 mm (2.5” and 10”). The thickness is 2 mm (0.08”).
Typical applications: temperature measurements in the winding of electrical machines and on curved surfaces

Foil Temperature Sensors

The Platinum measurement winding is embedded between two Polyimide foils and the connection leads attached. The thickness is 0.17 mm (0.007”).
Typical applications: Measurements on pipes

Metal Film Resistors

In place of measurement wires thin platinum layers are used as the measurement element. The layers are applied to ceramic carriers. There are a number of methods for depositing thin layers, e.g. vacuum vapor deposition, sputtering or sintering a thick Platinum paste.

Platinum Thick Film Measurement Resistors

In this design a Platinum paste is applied to a ceramic substrate using a silk screen process and fused. Then the resistance is trimmed to the nominal value, a glass protection layer and connection leads attached and then stress relieved. The thickness of the Platinum layer is between 10 µm and 15 µm.

Platinum Thin Film Measurement Resistors

Flat types

A Platinum layer 1 µm to 2 µm thick is vapor deposited or sputtered onto a ceramic substrate. The desired geometric shape is formed by cutting with a laser or structured using photolithography. The Platinum traces are between 7 µm and 30 µm wide. A laser trimmer is used to adjust the resistance to the nominal value. For protection against mechanical damage (scratches) a 10 µm thick glass ceramic insulation is applied using a silk screen process and fused. After the connection leads are attached by welding the connection spots are covered by a fused glass coating applied in a stress free manner. The geometric dimensions of the flat types vary from 1.4 mm x 1.6 mm (0.05” x 0.06”) to 2 mm x 10 mm (0.08” x 0.40”), the substrate thickness from 0.25 mm to 0.65 mm (0.010” to 0.026”)

Typical applications: all application ranges, surface temperature measurements

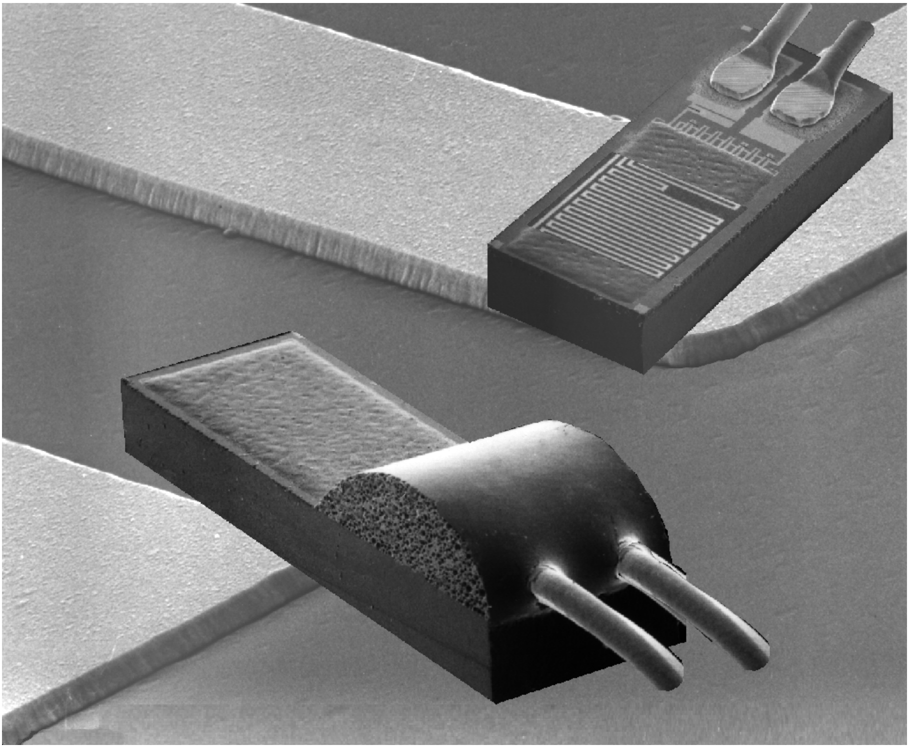

Fig. 3-10: Thin film measurement resistor

Thin Film Tubular Types

In addition to the flat type thin film measurement resistors a round form is available. In this design the flat measurement resistors are inserted axially in cylindrical ceramic tubes. The ends of the tube are sealed by melting glass frit across them which also seals and positions the ends of the measurement resistor together with the connection leads. The end result is a round shape. The ceramic also provides protection for the thin film measurement resistors. The outside dimensions of the diameter are 2 mm to 4.8 mm (0.080” to 0.20”) and the lengths are 5 mm to 14 mm (0.20” to 0.55”) .
Typical applications: process engineering

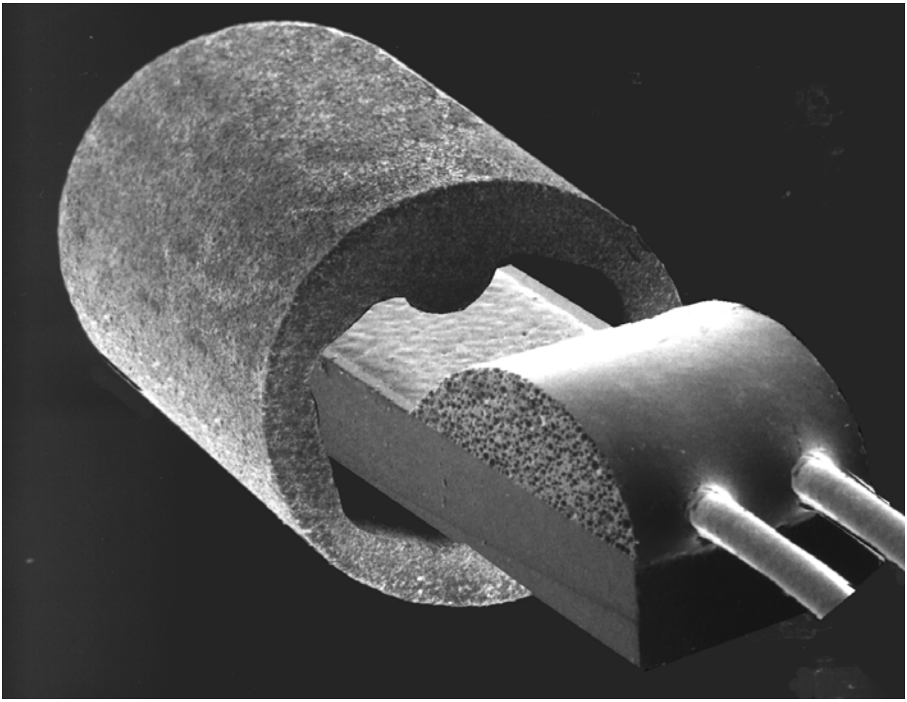

Fig. 3-11: Thin film tube type (Installation principle)

Thin Film Platinum Measurement Resistors with Solder Connection Pads
In this design the connection pads are coated with a solderable metallization. The design has adjacent connection pads with solder depots suitable for direct connection of insulated cables. Measurement resistors with connection pads at opposite ends are called “Surface Mounted Devices“, SMD, which can be directly soldered to circuit boards or hybrid circuits.
Typical application: On circuit boards.

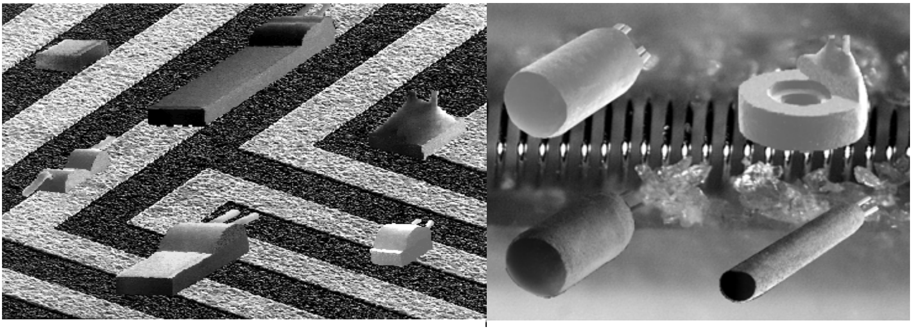

Fig. 3-12: Thin film and metal wire measurement resistor designs

Selection Criteria and Application Limits

The application limits of the sensors are restricted by numerous parameters. The most important, without question, is the temperature. Exactly defined temperature limits are difficult to specify. In addition to the temperature, they are also influenced by the medium to be measured, mechanical factors (different expansion coefficients) and the accuracy and reliability requirements.

It is not possible to specify a universally applicable conclusion as to which resistance thermometer design represents the best solution. The best construction solution is in a high way depending on the application conditions. Selection criteria are:

– Temperature range
  It is rare, that for a specific application the entire range specified in the standards is required. For high temperatures (greater than 600 °C (1112 °F)) sensors with special connection leads (NiCr) are used. For applications with temperature shocks wire-wounded types are preferred.

- Required accuracy and long term stability
  The accuracies are derived from the tolerance classes of from the actual individual measurement values; for long term stability, specific ambient conditions must be considered. Particularly, for industrial conditions above 400 °C (752 °F) caution should be exercised, carefully weigh versus thermocouples.

- Sensitivity and self heating
  Sensitivity is defined by the resistance changes according to K and for the Pt100 it is 0.385 Ω/K and for the Pt1000 it is 3.85 Ω/K. Since the measurement signal is derived directly from measured current, the resistance to the current (voltage drop at the measurement resistor is U = RxI) in the circuit causes self heating in the measurement resistor, which increases as the square of the current ($P = I^2 xR$). For accurate measurements the self heating must be kept small and therefore the current has to be limited.

It can be stated simply that for industrial applications, using the measurement currents of modern transmitters, the following needs not to be considered.

Expanded:

$$I_{allow} = \sqrt[2]{\frac{EK \cdot \Delta T_{allow}}{R_0}}$$

$$\frac{dU}{dT} = \sqrt[2]{R_0} \cdot \alpha \cdot \sqrt[2]{T_{allow} \cdot EK}$$

where
I_{allow} : Allowable measurement current
EK: Self heating coefficient in W/K
ΔT_{allow}: Allowable temperature increase
R_0: Nominal resistance
α: Temperature coefficient

Typical values for the voltage sensitivity for an allowable temperature increase of 0.1 K for Pt100 film type measurement resistors are approx. 0.1 mV/K and for a Pt1000, approx. 0.4 mV/K for measurements in flowing water.

In air, the values for a Pt100 are approx. 0.03 mV/K to 0.09 mV/K. The maximum allowable measurement current for flowing water for a Pt100 is approx. 6 to10 mA and for a Pt1000 approx. 3 mA. In air for a Pt100 it is approx. 2 mA and for a Pt1000 approx. 1 mA. Wire resistors have somewhat lower self heating coefficient than the film resistor types and therefore can be operated with higher allowable measurement currents (for Pt100 $I_{allow.}$ is approx. 4 mA to 14 mA in water and 2 mA to 3 mA in air). Their nominal value is however limited to 100 mW.

- Response time

  The response time of the bare resistors is usually of little concern because the design of the thermometer into which they are installed is the dominant factor in determining the response time. The following values, however, are of importance in laboratory applications.

  The small geometric dimensions of the film type measurement resistors and their associated minimal heat capacity results in short response times, at $T_{0.5}$ approx. 0.1 s in water and approx. 3 s to 6 s in air. For wire type resistors the response time $T_{0.5}$ is between 0.2 s and 0.5 s in water and between 4 s and 25 s in air.

- Geometric dimensions and connection wire resistances

  The assigned basic values and their allowable deviation limits apply to the measurement resistors including the connection wire resistances (generally 10 mm...30 mm (0.4”...1.2”) long) or for longer connection wires up to a defined sensor point. All additional connection wires and junction resistances must be considered or compensated using special circuits.

3.2 Industrial Temperature Sensor Design

3.2.1 Design

Temperature sensor (thermocouples or resistance thermometers) designs can be traced back to three basic versions:

- Sheathed temperature sensors
- Temperature sensors with exchangeable measuring insets
- Temperature sensors for high temperatures (straight thermocouples)

Sheathed Temperature Sensors
They consist of wires embedded in an insulating powder inside a metal tube. At one end the measuring element is capped and the other end contains a connection element, which can be a cable, plug or connection box.

During the manufacturing process for mineral insulated cables, the initially large diameter is reduced by stretching which compresses the insulating powder in such a manner that a flexible, vibration tight unit results.

Outside Ø of the cable (D) nominal ± deviation limits mm / inch	Minimum wall thickness (S) mm / inch	Minimum Ø of the internal conductor (C) mm / inch	Minimum insulation thickness (I) mm / inch	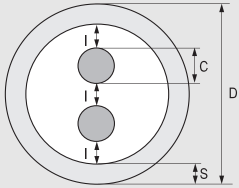
0.5 ± 0.025/0.020 ± 0.001	0.05/0.0020	0.08/0.0031	0.04/0.0016	
1.0 ± 0.025/0.040 ± 0.001	0.10/0.0040	0.15/0.0060	0.08/0.0032	
1.5 ± 0.025/0.060 ± 0.001	0.15/0.0060	0.23/0.0091	0.12/0.0047	
1.6 ± 0.025/0.063 ± 0.001	0.16/0.0063	0.24/0.0094	0.13/0.0051	
2.0 ± 0.025/0.080 ± 0.001	0.20/0.0080	0.30/0.0118	0.16/0.0063	
3.0 ± 0.030/0.118 ± 0.001	0.30/0.0118	0.45/0.0177	0.24/0.0095	D = Outside diameter
3.2 ± 0.030/0.125 ± 0.001	0.32/0.0125	0.48/0.0187	0.26/0.0102	C = Conductor diameter
4.0 ± 0.045/0.157 ± 0.002	0.40/0.0157	0.60/0.0236	0.32/0.0125	S = Wall thickness
4.5 ± 0.045/0.177 ± 0.002	0.45/0.0177	0.68/0.0268	0.36/0.0142	I = Insulation thickness
4.8 ± 0.045/0.187 ± 0.002	0.48/0.0187	0.72/0.0283	0.38/0.0150	
6.0 ± 0.060/0.236 ± 0.0025	0.60/0.0236	0.90/0.0354	0.48/0.0187	
6.4 ± 0.060/0.252 ± 0.0025	0.64/0.0252	0.96/0.0378	0.51/0.0200	
8.0 ± 0.080/0.315 ± 0.0032	0.80/0.0315	1.20/0.0472	0.64/0.0252	
10.0 ± 0.100/0.394 ± 0.0039	1.00/0.0395	1.50/0.0590	0.80/0.0315	

Tbl. 3-15: Construction and dimensions of mineral insulated cables with 2 inner conductors

The sheathed temperature sensors are used, e.g., where the measurement site is difficult to access.

Applications:
Bearing temperature measurements, hot gas ducts, open tanks, laboratories, test stands, etc.

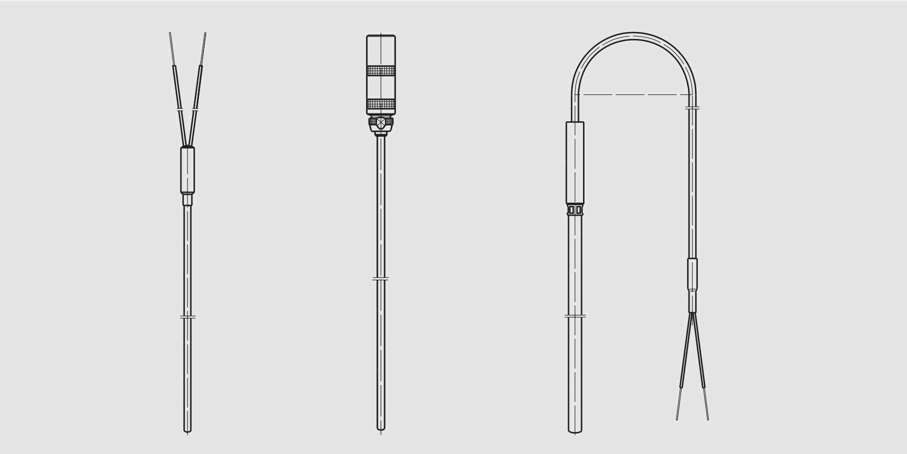

Fig. 3-13: Sheathed temperature sensor design for direct contact with the medium

Temperature Sensors with Exchangeable Measuring Inset

The measurement inset is constructed in a manner similar to the sheathed temperature sensors. The connections are usually made using screw terminals on a ceramic socket. To protect this unit from process conditions and to facilitate replacing the unit without shutting down the process, the unit is built into a protection fitting. It consists of a thermowell with process connections (e.g. flanged, threaded) and a connection head, with provisions for installing an appropriate cable connector. These components are defined in the standards:

DIN 43729 for connection heads,
DIN 43772 for thermowells.

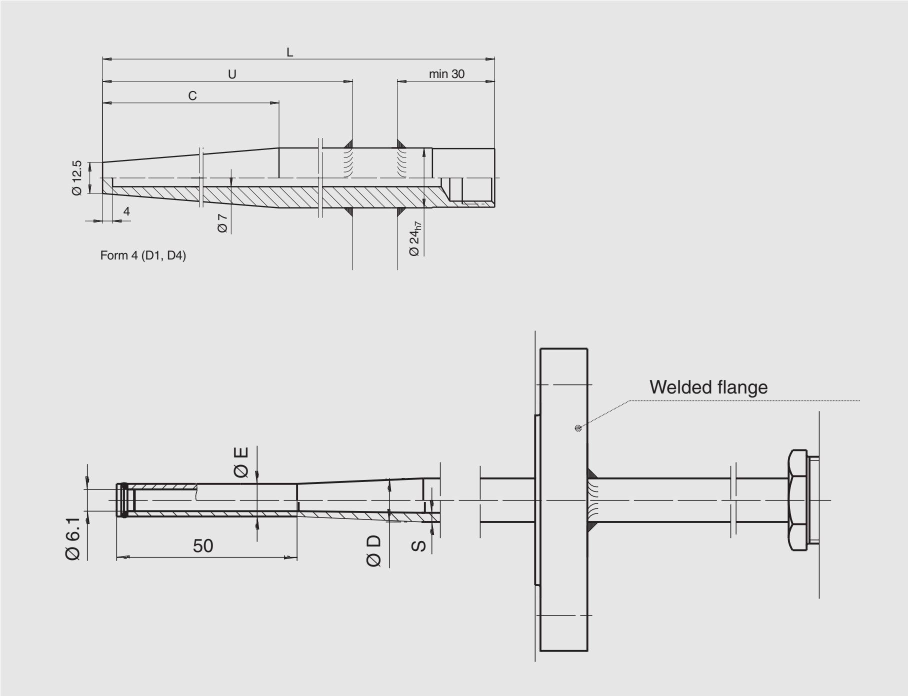

Fig. 3-14: Standardized thermowell examples: form 4 for hot steam pipelines
NAMUR thermowells for short response times

The entire sets of design types are defined in the standards:

DIN 43770, DIN 43771 for temperature sensors with exchangeable measuring insets and DIN 43733 for straight thermocouples.

Manufacturers and users have developed additional designs, based on the standardized ones, in order to accommodate varying operating and installation requirements.

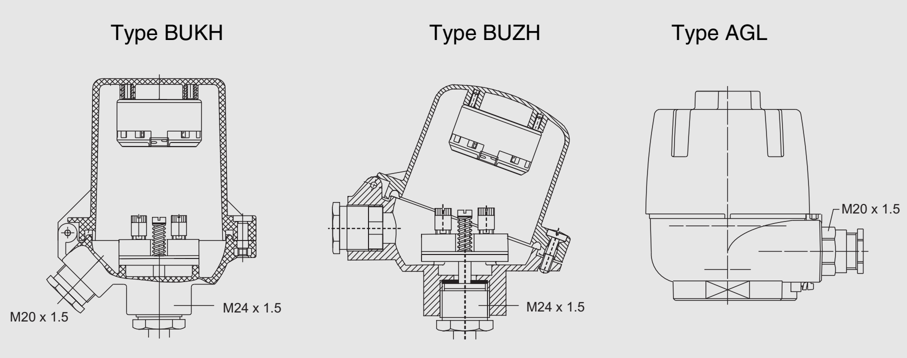

Fig. 3-15: Additionally developed connection head examples;
Type BUZH, BUKH for transmitter installed in the cover
Type AGL Flameproof Enclosure / Explosionproof

Often direct contact of the measuring sensor with the medium is not possible. In order to increase the life of the inset when oxidation and corrosion effects are present, or to facilitate a fast exchange without interrupting the process, thermowells are utilized.

For higher pressures, thermowells are made of drilled solid materials and processed on the outside. They have the advantage that their dimensions, shape and wall thickness can be optimally matched to the requirements (pressure, flow, etc.). Thermowells manufactured using these designs are usually more expensive than those made of tubing and pipes. For this reason the thermowells made from solid materials are only used for medium contacting temperature sensor area. Outside of the medium contact area, they can be extended using extension tubes if required.

For processes with lower loads, economical thermowells are used manufactured from tubing material with a welded plug at the outer end.

Medium	Minimum installation length	
Gas	15...20 times	thermowell diameter at the tip
Liquid	5...10 times	thermowell diameter at the tip
Solid	3...5 times	thermowell diameter at the tip

Tbl. 3-16: Recommended installation lengths (standard values for stationary media)

The installation length includes the length contained in the pipe couplings. In addition, listed in the following are minimum length recommendations for the most common thermowells:

	Thermowell diameter				
	9 mm 0.357¨	11/12 mm 0.433¨/0.472¨	14/15 mm 0.551¨/0.590¨	22 mm 0.866¨	25 mm 0.984¨
Medium	**Minimum installation length**				
Gas	180 mm 7.09¨	250 mm 9.84¨	300 mm 11.81¨	450 mm 17.72¨	500 mm 19.69¨
Liquid	80 mm 3.15¨	110 mm 4.33¨	160 mm 6.30¨	250 mm 9.84¨	300 mm 11.81¨

Tbl. 3-17: Recommended installation lengths for standard thermowell diameters

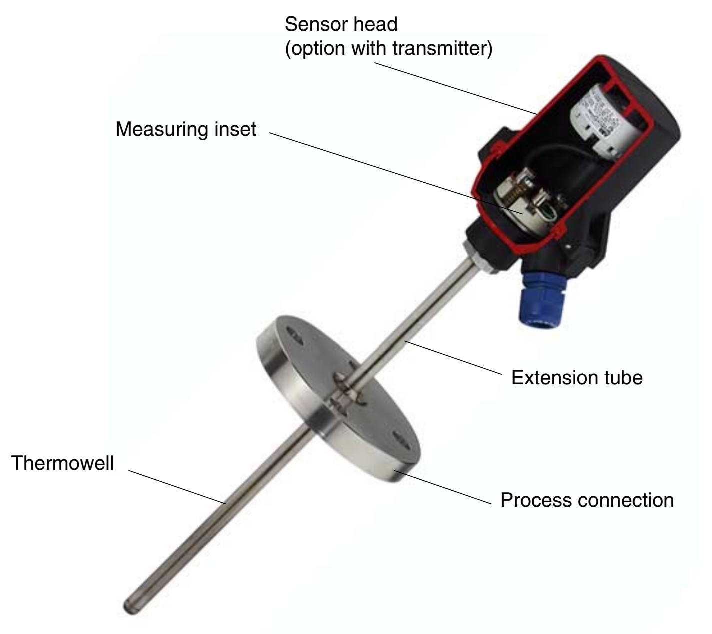

Fig. 3-16: Completely assembled temperature sensor with thermowell and extension tube

Temperature Sensors for High Temperatures (Straight Thermocouples)

These are also designed with exchangeable measuring insets. Since these applications are predominantly in combustion processes (temperatures to 1800 °C (3272 °F), these sensors incorporate some special design features.

Measuring inset:	Thermocouple wires with large cross sections in a ceramic insulating rod
Thermowell:	Made of heat resistant metals or ceramics.
Process connections:	Since these applications are predominantly pressure free, basic connections (oval flange, threaded bushings) with packing glands can be used.

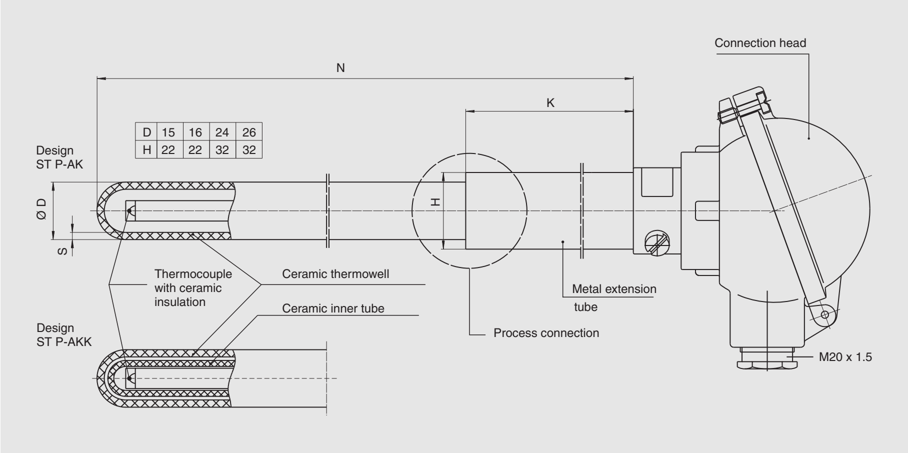

Fig. 3-17: Example: Temperature sensor design “Straight Thermocouple“

3.2.2 Installation Requirements

In industry there are a multitude of applications requiring temperature measurement. In many instances a standardized temperature sensor cannot be used. Special designs are required in order to optimize the measurement, e.g. measuring sensors with extremely short sensor lengths or thermowells with minimum mass.

Heat Transfer

Temperature sensors must always be in good contact with the medium, so that a fast temperature equilibrium condition can be achieved. Thermal measuring errors can be minimized using appropriate measures.

With increasing flow velocity the heat transfer increases and installation lengths can be reduced. This is particularly apparent by the D-Sleeves defined in standard DIN 43772 for use in hot steam pipelines. They are only installed to the tapered end and therefore have an appreciably shorter installation length than the previously listed rules of thumb (see Tbl. 3-17 Recommended installation lengths):

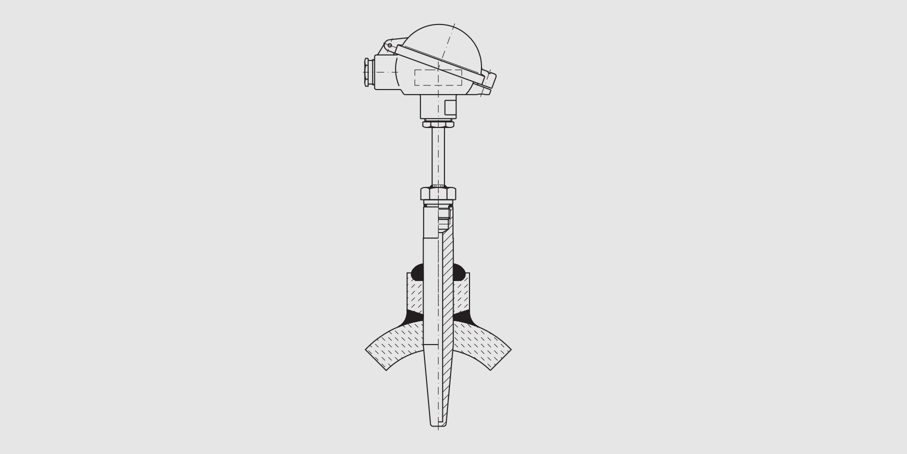

Fig. 3-18: Temperature sensor in a hot steam pipeline at high flowrate

Installation Positions

If the designed installation length required for the installation is not available, then design changes to the sensor or to the installation arrangement may be required to assure more advantageous conditions:

- A tapered thermowell can reduce the required installation length by approx. 30 %.
- In pipelines with smaller diameters (DN 10...DN 20 (3/8”...3/4”)) the thermowell can be made an integral part of the connection adapter.

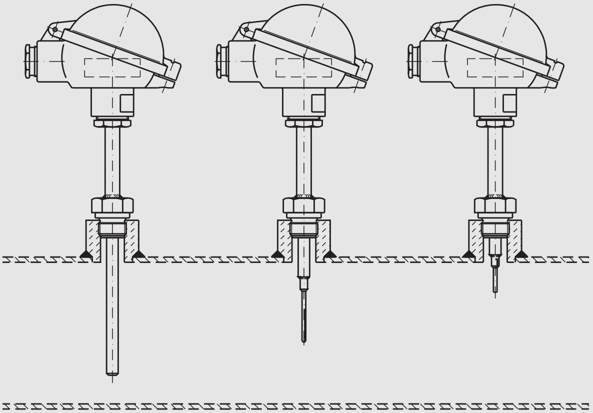

Fig. 3-19: Shorter installation lengths using reduced thermowell tips or exposed measuring inset

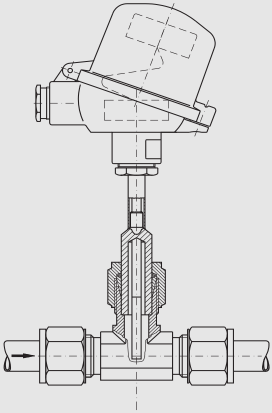

Fig. 3-20: Temperature sensor installation in small diameter pipelines

At the installation site, selection of the connection adaptor orientation for the sensor may also be used to achieve the required length:

- By lengthening the connection adaptor for the sensor (see Fig. 3-20),
- by increasing the diameter of the pipeline,
- by installing at an angle,
- by installing in an elbow (this installation method is preferred because it reduces the pipeline cross section the least and imposes the least stress on the thermowell) see Fig. 3-21.

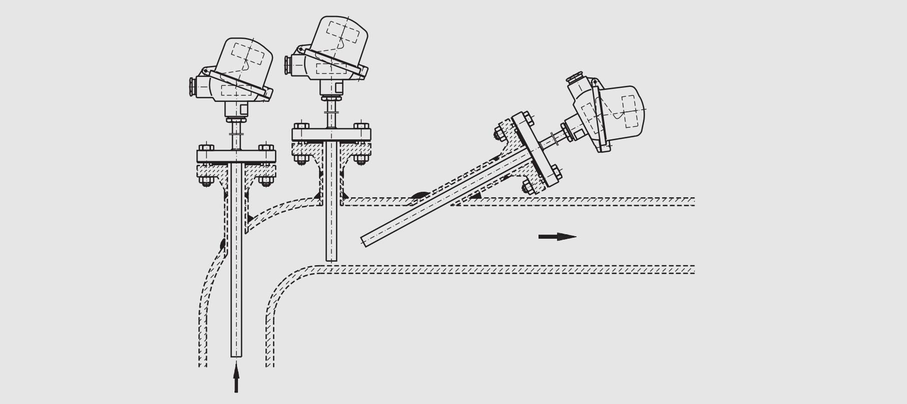

Fig. 3-21: Installation orientations in a pipeline

Installations without Thermowells

Using a directly installed temperature sensor without a thermowell can improve the response time and with the smaller diameter the installation length can be made very short (possibly: 1.5; 2; 3; 6 mm (0.060“; 0.080“; 0.125“; 0.250“)). Thermocouples, in comparison to resistance thermometers measure at point locations, allowing very short installation lengths (see Tbl. 3-18).

	Diameter		
	1.5 mm (0.060“)	3 mm (0.125“)	6 mm (0.250“)
Medium	**Minimum installation length**		
Gas	30 mm (1.18“)	60 mm (2.37“)	100 mm (4.00“)
Liquid	8 mm (0.312“)	30 mm (1.18“)	60 mm (2.37“)
Solid	5 mm (0.200“)	20 mm (0.750“)	30 mm (1.18“)

Tbl. 3-18: Recommended installation lengths for direct immersion (without thermowell) of the temperature sensors

For resistance thermometers the temperature sensitive length of the measurement resistors, type dependent, is approx. 7...30 mm (0.28“...1.18“) long and must be added to the values in the table.

3.2.3 Process Connections Types

Installations in pipelines are predominantly made using threaded, flanged or welded connections. The selected installation type determines the pressure rating, since the pressure existing in the process pipeline acts on the cross section of the connection fitting.

Threaded Connections

Cylindrical threads are sealed using gaskets installed in the seal area. Based on the temperature at the seal and the aggressiveness of the medium, gaskets made of Fluorocarbon, Copper or stainless steel can be used. Because of the different elasticities and because the process pressure could cause the gaskets to lift from the seal surface, pressures which can be sealed are relatively low (max. 100 bar (1,450.38 psi)).

Tapered threads seals are achieved by the sealing action of the thread design without requiring additional gaskets or the use of PTFE tape. Since the seal exists along the entire length of the threads, the process pressures which can be sealed are higher. Dependent on the manufacturing process for the threads in the threaded bushings or nipples and the strength of the material, pressures of 300...400 bar (4,351.13...5,801.51 psi) can be sealed.

Flanged Connections

For flanged connections the pressure rating of the flange determines the maximum pressure. Pressure ratings up to 160 bar (2,320.60 psi) are available. At the lower pressures, flat gaskets are used while at higher pressure, O-ring gaskets in conjunction with ring joints are used.

Note:

The smaller the projected area of the seal, the higher the seal pressure because when bolting the mating parts together, a higher compression force between the parts can be achieved.

Welded Connections

In ranges to 700 bar (10,152.64 psi) welded thermowell connections are often used. Care should be exercised, especially at high flow velocities, to assure that the connection nipples/thermowells are designed to be close fitting, to prevent damage or breakage of the thermowell due to vibrations at resonance.

Conical and Lens Type Connections

For high pressure applications (up to 4000 bar (58,015.07 psi)) in gas synthesis applications, requiring fast responding and replaceable sensors, conical shaped seal systems are used, in which the mating piece has an approx. 1° larger angle, so that the seal is effectively produced by a line shaped seal area. In this design, extremely high seal forces can be achieved.

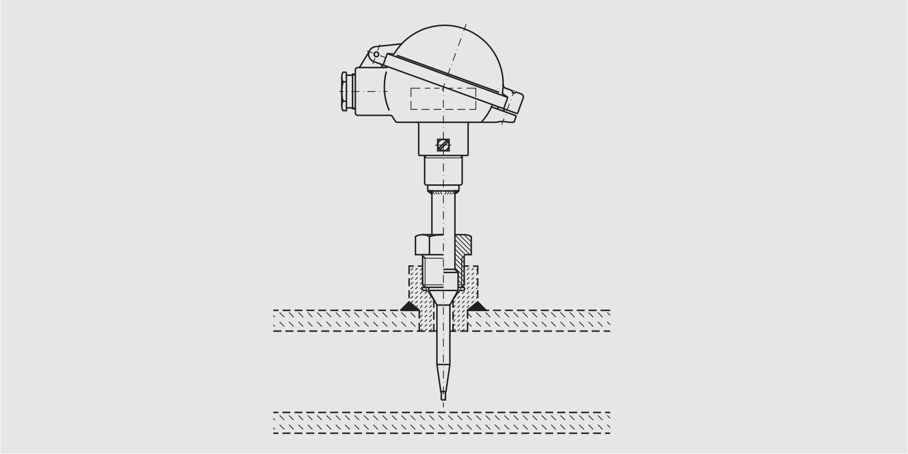

Fig. 3-22: High pressure temperature sensor with conical seal

Pressure Tests

Often the manufacturer must provide a test certification showing that the seal is effective under pressure (see chapter 6). Typically, a test pressure 1.5 times the pressure rating of the operating pressure is applied for 3 minute period.

3.2.4 Process Requirements

When selecting the optimal sensor for a particular application, the required properties must first be defined:

- Short response time
- Accuracy
- Small space requirements

The result is a design with small sensors.

On the other hand, the process requirements must be considered:

- Temperature
- Flow velocity
- Pressure
- Vibration
- Abrasion
- Aggressive media

These require a more substantial design with longer installation lengths, because:

- The temperature requires a reduction in the strength,
- the flow velocity causes a bending force and resonance vibrations,
- the pressure causes a radial force on the sheathed surface,
- the vibration causes a load on the material, especially at the attachment point,
- the abrasion causes material loss,
- an aggressive fluid causes a loss of the wall thickness due to corrosion attack.

In addition to the many special designs, there are also thermowells, which are completely defined in the standards (e.g. DIN 43772). The thermowell should provide protection for the measuring inset against chemical and mechanical damage. The selection of the thermowells is on the one hand dependant on the process parameters and on the other on the required measurement parameters.

The standard DIN 43772 includes the load diagrams for various thermowell designs.

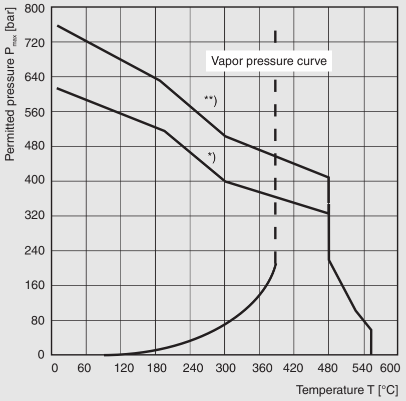

*) Form 4 (D2, D5)
Protection sleeve c = 125mm (5“):
Bending, flow impact lengths = 125 mm (5“)
Thermowell diameter = 24 mm (0.95“)
Thermowell inside diam. = 7 mm (0.28“)

**) Form 4 (DS)
Protection sleeve c = 65 mm (2.6“):
Bending, flow impact lengths = 65mm (2.6“)
Thermowell diameter = 18 mm (0.7“)
Thermowell inside diam. = 3.5 mm (0.14“)

Flow velocity
Water = 5 m/s (16 ft./s)
Steam = 60 m/s (200 ft./s)
Air = 60 m/s (200 ft./s)

Fig. 3-23: Typical load diagram, material 1.4571 (316 Ti)

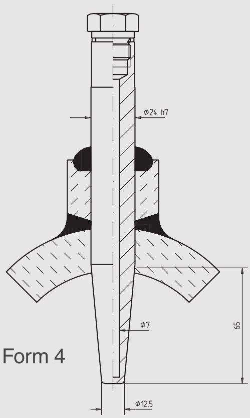

Fig. 3-24: Pressure/Material dependent selection of thermowells (form 4 with 65 mm (2-1/2”) tapered length/installation length)

3.2.5 Thermowell Designs

Thermowells must satisfy the following functions:

- Position the temperature sensitive sensor tip in the process
- Protect the temperature sensor
- Seal the process areas from the environment.

Failure of any of these components can lead to operation interruptions, release of flammable, explosive or poisonous materials, equipment damage or personnel injury. Therefore a meticulous risk and load analysis is essential.

Thermowells, dependent on the application area, are subjected to certain legal requirements. As pressurized parts e.g. materials, design, calculations, manufacture and testing must satisfy the Pressure Equipment Directive. Internationally the rules and regulations in the ASME-Codes have as wide acceptance. In explosion hazardous areas, the thermowells provide a separation between zones of different hazardous levels (see also chapter 7).

Thermowells are available in proven and standardized forms with a variety of different process connections.

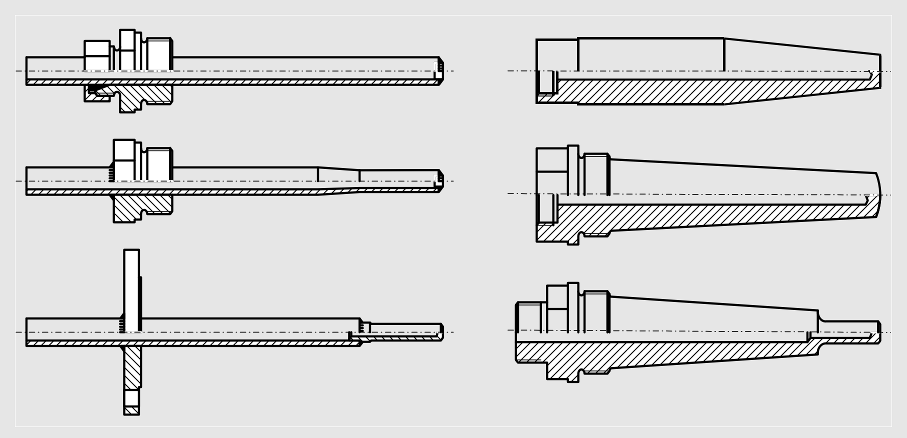

Fig. 3-25: Thermowell designs (schematically)

For standardized thermowells, load diagrams are published in the corresponding standard, which specify the maximum allowable pressure in air/steam or water at a specific temperature and a specific maximum flow velocity. Often, however, thermowells deviate in dimensions and/or operating conditions from the standard values.

Thermowell Materials

In addition to the design and dimensions of the thermowells, the selection of the material is of decisive importance. The material must be compatible with the process conditions and have sufficient stability (see chapter 3.2.4 and chapter 3.2.6).

For pressure containing parts, material test certifications are often required for their heat strength and/or notch impact strength. The load limits for the materials in the lower temperature ranges are determined, e.g., from the 1 %- yield point and at higher temperatures from the 100,000 hour creep strength. These values are published as a function of the operating temperature in the material standards or data sheets. The safety factor (e.g. 1.5 for ductile steel) and possible load reductions due to welded connections can be found as a function of the material group in the relevant directives.

Thermowells made of brittle materials (e.g. glass, ceramic) require special considerations, since a single impact could lead to sudden and complete destruction. As a rule, considerably higher safety factors and protection measures are required relative to impact stresses. In critical installations a second barrier (compression fittings, solid electric feedthrus, etc.) is necessary, which prevents the escape of hazardous material in case of a thermowell breakage.

Selection of the Thermowell Design

The medium acts mechanically on the thermowell through pressure, flow velocity and eddy formation. Therefore selection of a thermowell design includes:

- The stress due to the external static pressure,
- the bending stress due to the flow of the medium,
- the stress due to the outside induced flexural vibrations.

An example of a installation situation for thermowells is shown in Fig. 3-26.

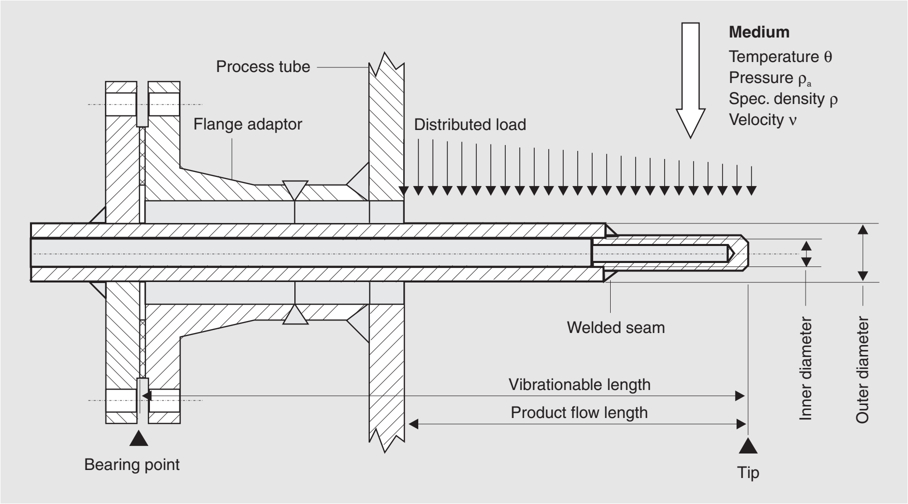

Fig. 3-26: Thermowell installation example

The pressure strength can be increased by increasing the wall thicknesses. At higher temperatures, the strength values for many materials decrease to the point where acceptable wall thicknesses can only be achieved by using higher heat resistant steel or nickel alloys.

The statistical calculations for the thermowell loads yield the stress conditions. The stresses due to external pressure are superimpose on the bending stresses due to the flowing medium. As a function of the outside diameter of the thermowell, the skin-friction coefficient, the velocity of the medium and its density a distributed load is produced on the thermowell. This causes a bending stress whose maximum occurs at the mounting location. The most effective method to reduce high bending stresses is to reduce the length of the thermowell. Additionally increases in the outside diameter at the mounting location or selection of a stronger material are also possible alternatives.

In horizontal installations at higher temperatures a bending stresses can be produced by the weight of the thermowell because of the creep processes and lead to appreciable deformations.

Vibration Analysis

The dynamic loads due to the vibration of the thermowells require a detailed discussion. The vibrations cause alternating stresses in the thermowell, which are superimposed on the stress conditions described above.

In addition to the resonant frequency of the thermowells in its installed condition, the excitation frequencies of external periodic forces are important. One of these excitation frequencies are caused by vortex shedding of the flowing medium downstream from the thermowell. At certain flow conditions, a “Karman Vortex Street“ forms which alternately sheds individual vortices from the sides of the thermowell. The frequency of the vortex shedding is a function of the process parameters and the thermowell dimensions.

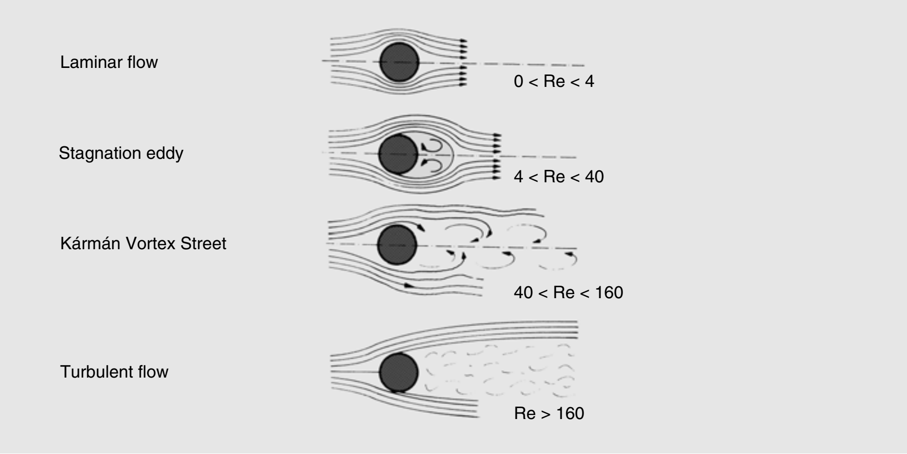

Fig. 3-27: Flow conditions around thermowells

The periodic excitation forces cause the thermowell to vibrate. The stress due to the vibration amplitude increases rapidly in the resonance range, i.e. when the excitation frequency is the same as the resonant frequency of the thermowells.

Since the damping in the worst case can be assumed to be small, the amplification factor of the vibrations at resonance approaches infinity. This quickly leads to fatigue and breakage of the thermowell at the mounting location or at any other sharp edge or sudden change in the wall thickness (Notch effects).

Periodic excitation forces, which can also be produced by pumps, compressors and other rotating or oscillating masses, are transmitted through the pipeline to the thermowell. Non-critical and aperiodic forces (e.g. individual pressure shocks), do not lead to excessive forces and long term vibrations of the thermowells.

As a consequence a very conservative design rule requires that the excitation frequency never exceed 80 % of the resonant frequency of the thermowells in applications with a high risk potential.

When vibration problems exist, shortening the unsupported length (which also changes the resonant frequency) is the most effective measure to prevent failures due to vibration. The reduction of the effective total length can also be achieved by adding close fitting sleeves or supports at suitable locations. Welded sleeves can be used to reduce the length of the part protruding from the sleeve/thermowell.

In those applications where it is not possible to follow the 80 % design rule (e.g. temperature sensors for Diesel motors, turbines, compressors etc.), comprehensive type tests are required. They include, for example, vibration tests at resonant frequency point at the operating temperature, where acceleration amplitudes at the thermowell tips may exceed 150 g (150 times the acceleration of earth gravity).

After 10 million load cycles have been successfully passed, long term reliability can be assumed. In spite of this, the resonant frequency point should be passed quickly when starting up or closing down the system, when possible.

Optimization Measures

Unfortunately many measures to improve the mechanical stability have a negative impact on the measuring characteristics.

High load carrying, i.e., relatively thick walled thermowells result in a decidedly longer response times due to their heat capacity. They can be reduced by making the fit between the measuring inset and the opening in thermowell tighter, reducing the thickness at the thermowell tips, as well as reducing the measuring inset diameter as far as this is technically possible.

Thermowell with vibration desirable short installation lengths show a relatively large heat loss. Possible improvement measures include reducing the temperature sensitive length of the measuring inset to the end of the temperature sensor and reducing the thickness at the thermowell tip.

Problem	**Corrective measures Thermowell geometry**	**Corrective measures Operating parameters**
Excitation frequency too close to resonance point	– Reduce unsupported length – Increase outside diameter	– Reduce flow velocity (Medium density has no effect)
Pressure force at tip too high	– Increase outside diameter of the tip – Select higher strength thermowell material	– Reduce operating pressure
Bending stress at the mounting location too high	– Increase outside diameter at the mounting location – Reduce length – Select higher strength thermowell material	– Reduce flow velocity – Reduce medium density – Reduce operating pressure

Tbl. 3-19: Summary of the primary optimization options for thermowells

Important for highly stressed thermowells is to avoid stress peaks at step diameter changes, threads, weld seams etc. The so called Notch effect can be reduced by carefully rounding all sharp edges at geometry transitions, selecting less sensitive thread types, move welded seams to less sensitive locations, etc.

It is possible to optimize the flow conditions by appropriate thermowell geometries, e.g., a tapered thermowell with its continuously changing outside diameter reduces the formation of a vortex street and thereby the excitation forces.

Various operating conditions can be considered together, as long as the selections for the undesirable conditions are defined (e.g. maximum flow velocity at maximum medium density and maximum pressure). It should be noted that the density of the medium may increase if the phase changes or if it is cooled which adds to stresses on the thermowell.

Selecting Practical Thermowell Specifications

Several special programs are available to assist in selecting thermowell designs. The basis for the selections is the careful specification of the operating conditions and design details (see Tbl. 3-20). The determination of the correct entry parameters, as well as the interpretation the selection results together with optimization measures requires, especially in borderline applications, a fundamental knowledge of the subject and experience. Design and manufacturing quality are in the end, decisive for operating safety of thermowells.

Category	Required information	Useful information
General	System Design	Special hazardous conditions Geometric installation requirements
Medium	Composition Temperature Pressure Flow velocity	Density at operating conditions Test pressure Normal volume, mass flowrate, Pipeline size
Material	Temperature limits Corrosion resistance Weldablility	Available material specifications Problems with corrosion, abrasion Connection materials
Geometry	Diameter Length Connection dimensions	Maximum possible diameter Response time Heat conduction error

Tbl. 3-20: Information for selecting thermowell designs

Connections of Thermowells

For the dimension of the process connections there are standardized calculation methods (e.g. for welded seam thicknesses, flange connections) or corresponding experience values (e.g. nipples with seal rings, self sealing tapered threads).

For process connections with gaskets the so called sealing pressure is decisive. It is a function, in addition to the type, of the material and dimensions of the gasket, as well as the operating temperature and proper installation. For threads an appropriate lubricant to reduce the thread friction and prevent galling is recommended.

Thereby the stresses on the threaded nipples are reduced and higher sealing pressures at lower tightening torques are achieved. For threads with gaskets, retightening after the first load cycles to equalize the seating processes and maintain the gasket forces is recommended.

3.2.6 Corrosion

Reasons for the Formation of a Corrosion Element

The electrochemical processes, in which the corrosion occurs, are determined by the material, the ambient effects and the composition of the electrolytes. For the formation of a corrosions element, i.e. the generation of a potential difference, certain factors must be present:

- Material zones with electrically conductive materials at different potentials,
- a connection between these zones for exchanging charge carriers (electrons),
- completing the circuit by the electrolyte.

Corrosion elements can exist in parts, that appear to be made of “one“ material due to composition differences in the alloy or contamination.

Corrosion Types

Surface Corrosion

Surface corrosion, which can be uniform or nonuniform over the entire surface, produces crater type depressions. This can be countered by properly sizing the thermowells. Or, the material loss due to corrosion can be reduced by increasing the surface quality. Uniform corrosion is easiest to combat through use of suitable materials.

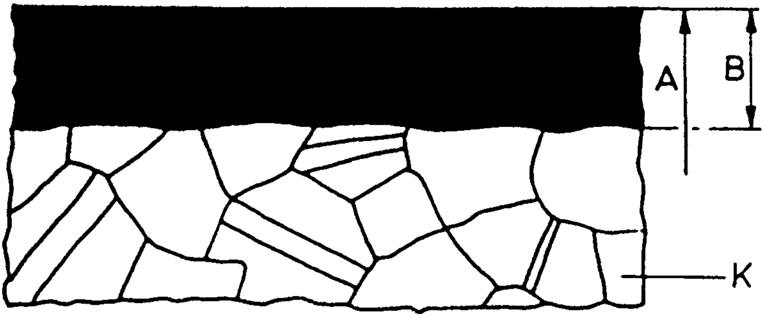

Fig. 3-28: Uniform material disintegration corrosion shown schematically
A Starting condition
B Material thickness disintegration of the part due to uniform corrosion
K Grain (crystal)

Contact Corrosion

Contact corrosion occurs when two dissimilar metals are in contact in the presence of an electrolyte. The less precious of the two metals is subjected to the most corrosion, the material loss is uniform. The problem is design related and can be counteracted, e.g. by selection of similar material type combinations.

High Temperature Corrosion

The suitability of materials for use at high temperature is primarily due to the build up of a protective oxide layer on the surface. The presence of this oxide layer reduces the direct contact between the metal and the atmosphere, finally preventing it. The oxidation resistance of a material at elevated temperatures depends on the type of oxide which forms. If the oxide is loose and porous, the oxidation process continues until the entire surface is oxidized.

The selection of suitable alloys must be made considering the actual operating conditions. The oxidation resistance of Fe-Ni-Cr alloys at isothermal conditions is primarily a function of their chromium content, while the Nickel and Iron components contribute only slightly.

Under cyclic temperature conditions the degree of resistance can change appreciably. In this case, alloys with a higher Nickel contact are decidedly better, because it reduces the thermal expansion and thereby the flaking off of the oxide.

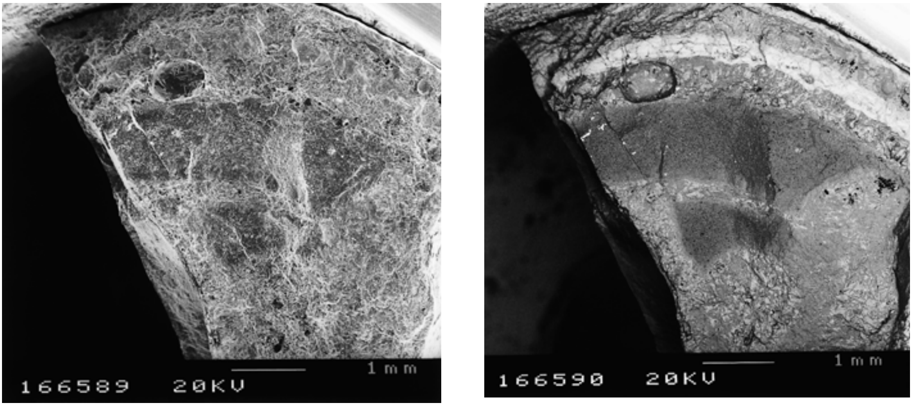

Fig. 3-29: High temperature corrosion of CrNi-Steel 1.4841 (AISI 314) for use in waste Incineration systems at temperatures approx. 1300 °C (2372 °F) after 5-days-service

Pitting Corrosion

The pitting corrosion is a localized, pinpoint shaped, penetrating type of corrosion, which in a relative short time can progress through the entire thickness of the metal. Since it actually eats into the metal and only exhibits point like damage on the surface, it is often difficult to recognize and therefore dangerous. It is greatly accelerated in chloride containing aqueous solutions. The addition of Molybdenum (Mo) and higher chromium contents provides better resistance, e.g. 1.4571 (AISI 316) which contains 2.5 % Mo. The material 1.4539 (Uranus B6) with 5 % Mo appreciably improves the resistance compared to 1.4571 (AISI 316).

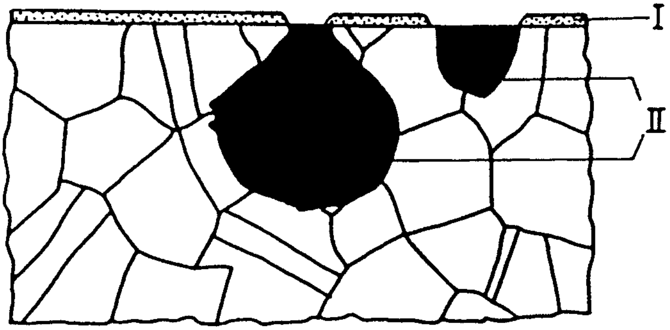

Fig. 3-30: Pitting corrosion schematically
I Passive layer, with small localized breakthroughs at which pinpoint and hole shaped corrosion occurs
II Active disintegration of the material

Fig. 3-31: Pitting corrosion in a Monel thermowell after usage in a chemical system

Crevice Corrosion

Crevice corrosion occurs due to potentials in the narrow openings caused by the presence of oxygen, such as may exist under a water surface or in narrow gaps, e.g. at the thermowell/flange connection. As a manufacturing countermeasure, the thermowell should be welded to the flange without gaps. The material disintegration occurs as a groove or surface phenomenon. Since crevice corrosion is not always visually evident, it is one of the most dangerous types of corrosion. Steels with higher pitting resistance are also less susceptible to crevice corrosion.

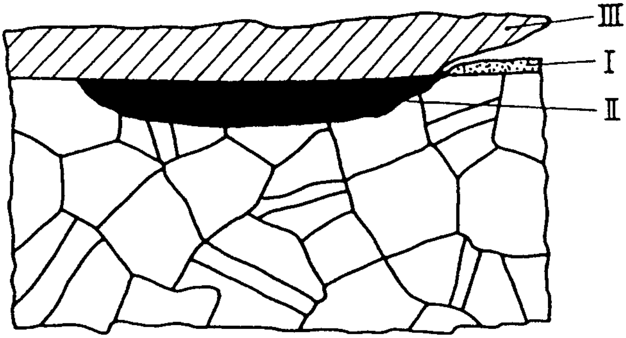

Fig. 3-32: Crevice corrosion schematically
I Passive layer, which will no longer be created in the narrowing gap
II Active disintegration of the material
III Surface contamination, deposits, etc.

Intercrystalline Corrosion

Intercrystalline corrosion is caused by selective corrosion. This occurs due the existence of differing potentials at the grain boundaries, or due to nonhomogeneous structures, in which the grain boundaries are dissolved. This type of corrosion occurs primarily in stainless steels when exposed to an acidic medium when, due to heating effects (450...850 °C (842...1562 °F)) in austenitic stainless steels and above 900 °C (1652 °F) for ferritic stainless steels the Chromium Carbides precipitate in a combined “critical“ form at the grain boundaries.

This causes a localized depletion of Chromium in addition to the precipitated Chromium Carbides. For reducing these effects, steels with reduced Carbon content, so called “Low carbon“ steels such as 1.4404 (316L) or so called stabilized (with Titanium or Niobium) steels such as 1.4571 and 1.4550 (AISI 316Ti and 347) are used. The Titanium or Niobium binds with the Carbon to stabilize the Ti- or Nb-carbides, so that even for critical heat effects, the Chromium Carbides cannot be precipitated.

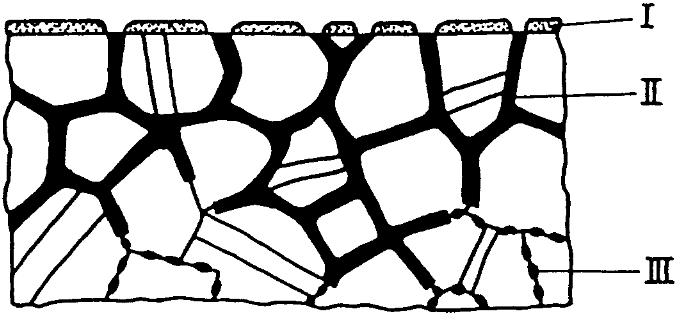

Fig. 3-33: Intercrystalline corrosion schematically
I Passive layer formed at grain boundaries where Chromium has not been depleted
II Selective attack near the grain boundaries in zones with depleted Chromium
III Grain boundaries with Chromium Carbide

Transcrystalline corrosion

Differing from intercrystalline corrosion the transcrystalline corrosion takes place within the grains in a material structure. It generally occurs along those sliding planes, on which an increased displacement density (the number of displacements which exist which is a measure of previous deformations) has occurred due to plastic deformations and therefore a higher energy level has resulted. It is a form of corrosion with serious consequences, since it usually becomes apparent only after a breakage has occurred (e.g. after continuous, large tension loads).

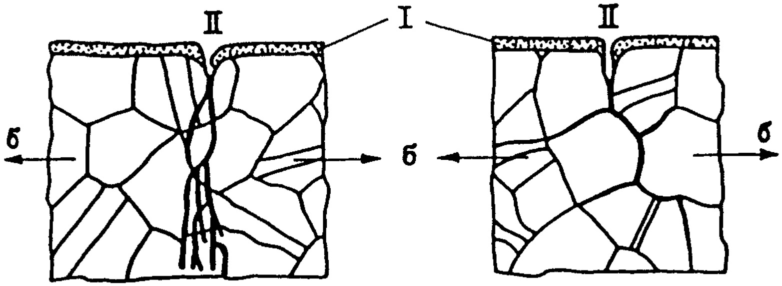

Fig. 3-34: Transcrystalline corrosion stress cracks schematically; branching cracks
I Passive layer
II Localized penetration through the passive layer

Stress Crack Corrosion

Conditions for the occurrence of stress crack corrosion are the presence of tensile and residual stresses (e.g. caused by welding or cold working), the presence of an electrolyte and the existence of a crack.

These stresses lead to a movement of the internal displacements in the material. On the surface of the part sliding stages occur. If the surface is covered with a tightly attached blocking oxide layer, it can rupture at the sliding stages and corrosion can attack the material. The interaction between the corrosion and the mechanical loads leads to accelerated crack formation and early failure of the part.

The tendency towards stress crack corrosion is particularly evident in austenitic steels. This aided by Halogen ion containing corrosion elements, especially ones containing Chlorides of Alkali or Earth Alkali metals, e.g. solutions which contain Sodium, Calcium or Magnesium chlorides. As the chloride ion concentration increases, so does the susceptibility. For this reason in sour gas applications, e.g. according to NACE, a hardness of 22 HRC should not be exceeded for steels. Cold worked thermowells should be stress relieved after they have been formed.

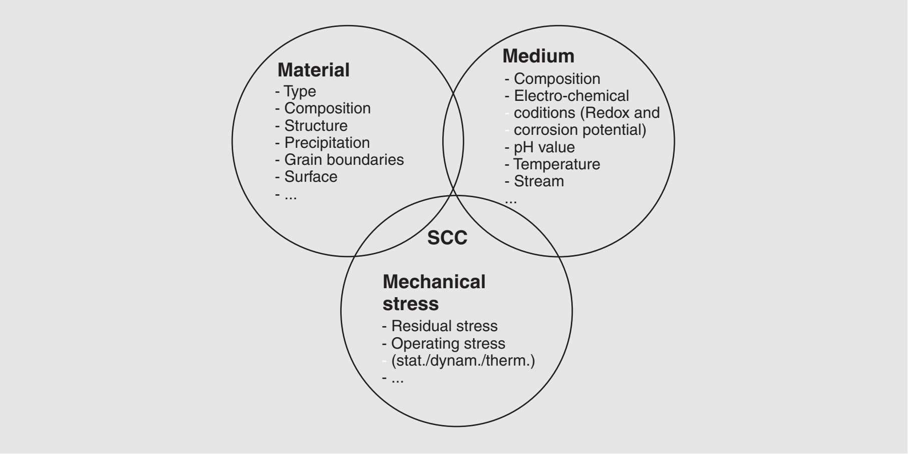

Fig. 3-35: Stress crack corrosion as the result of the interaction among of different factors

Vibration Crack Corrosion

Vibration crack corrosion is the result of the existence of dynamic tensile stresses in the presence of a corrosive medium. Displacement of the sliding stages of the material on the surface of the part, which occurred due to the vibration forces lead to deep cracks. Even weak electrolytes can cause an early failure of the part.

Vibration crack corrosion can be counteracted by selecting suitable materials as a function of the attacking medium and by appropriate thermowell design. For critical applications operating near the stress limits, it is essential that design calculations be made. They should consider especially the critical resonance vibrations (see chapter 3.2.5).

Fig. 3-36: Vibration crack corrosion example of a flange/thermowell connection. The crack started at the beginning of the threads on the process side.

Stress and vibration corrosion can occur in all metallic materials. The corrosion process for stress crack corrosion is a function of the material and occurs as electrolytic inter- or transcrystalline corrosion.

Hydrogen Embrittlement

Hydrogen embrittlement is caused by cathodic reactions in an electrolyte. The active hydrogen diffuses into the material and is stored in the tetrahedron and octahedron spaces in the crystal lattice. The crystal lattice is expanded and the hydrogen atoms restrict the elastic movement of the metal atoms (embrittlement). When stressed, cracks are formed eventually leading to failure of the material. As with all crack corrosion the process remains unnoticed initially and only becomes apparent after a failure has occurred. Special materials are used to prevent this type of corrosion.

The types of damage caused by hydrogen in an aqueous medium in steels are different from those that occur at high temperatures in gases. The damage in gaseous media is based primarily on the decarburization of the steel, while, dependent on the temperature of the material and the pressure in the medium containing the hydrogen, the decarburization may progress from the surface into the inner sections of the steel. The diffusion effects are forced into the background.

In a truer sense, only the damages caused by the inner decarburization are designated as hydrogen attacks. Since the decarburization can be suppressed if the carbon is combined, all carbide building steel alloys are superior to the carbon steels in regard to compressed hydrogen resistance. The resistance increases in general with increasing alloy content.

The specially developed steels for use against compressed hydrogen attack contain above all else, Chromium, Molybdenum and Vanadium elements in low alloy steels such as 1.7362 . They are standardized in SEW 590 (Steel Iron Material Sheet).

In addition to these materials, other steels can be used dependent on the stress conditions, particularly the material groups “heat resistant and high heat resistant steel“ as well “stainless and acid resistant steel“.

Selective Corrosion

Differing from the corrosion mechanisms discussed up to this point, selective corrosion only attacks one structure type, while the rest of the structure remains completely intact. For the austenitic CrNi steels it is primarily the Sigma-Phase and the δ-Ferrite which is converted to the Sigma-Phase which is selectively attacked. This type of corrosion occurs predominantly in the welded seams of austenitic CrNi steels. A selective attack occurs for certain mixtures of reducing and oxidizing acids, e.g. hydrofluoric/nitric acid mixtures and in strong oxidizing sulphuric acid.

General Comments

Even when the material selection is optimized, an aggressive attack could still occur in certain areas, e.g. at welded seams, because during welding, decomposition of the alloy can occur. Partial material compositions may be formed which have a lower resistance. In order to prevent this possibility, thermowells manufactured from solid materials are used where an aggressive medium is present so that weld seams on the medium side are not required. In addition, sometimes two thermowells are using, one placed inside the other.

In general, there are materials suitable for most media, but there is no material that is totally resistant. For the temperature measurements the interaction of aggressive media and high temperatures, disintegration is always a given. The degree depends on the material selection, which may be used to minimize the effects or to maximize the life of the instrument.

For selecting the correct material it is advisable, as a minimum, to use at least the same material quality which was used to make the tank/pipeline. If cost or strength is a concern, a material can be used with appropriate properties for the sheath material, e.g. Glass, PFA, Tantalum, or an abrasion and corrosion resistant coating such as Stellite.

3.2.7 Material Selections

The following table provides an overview of the many materials used for thermowells.

Max. Temp. in °C (°F)	Material No.	Material properties	Application range
Unalloyed, Heat and High Heat Resistant Steel			
400 (750)	1.0305 (ASTM 105)	Unalloyed steel	Welded and threaded thermowells in steam pipelines
500 (930)	1.5415 (AISI A204 Gr.A)	Low alloy heat resistant with Molybdenum additive	Welded and threaded thermowells
540 (1000)	1.7335 (AISI A182 F11)	Low alloy heat resistant steel with Chromium & Molybdenum additives	Welded and threaded thermowells
570 (1000)	1.7380 (AISI A182 F22)	Low alloy heat resistant steel with Chromium & Molybdenum additives	Welded and threaded thermowells
650 (1200)	1.4961	High heat resistant austenitic Chrome-Nickel steel (Niobium stabilized)	Welded and threaded thermowells
Rust and Acid Resistant Steel			
550*) (1020)	1.4301 (AISI 304)	Good resistance against organic acids at moderate temperatures, salt solutions, e.g. sulfates, sulfides, alkaline solutions at moderate temperatures	Food and beverage industry, medical system engineering
550*) (1020)	1.4404 (AISI 316 L)	Through the addition of Molybdenum higher corrosion resistance in non-oxidizing acids, such as acetic acid, tartaric acid, phosphoric acid, sulphuric acid and others. Increased resistance against intercrystalline and pitting corrosion due to reduced Carbon content	Chemical and paper industries, nuclear technology, textile, dye, fatty acid, soap and pharmaceutical industries as well as dairies and breweries
550*) (1020)	1.4435 (AISI 316 L)	Higher corrosion resistance than 1.4404, lower Delta-ferrite content	Pharmaceutical industry
550*) (1020)	1.4541 (AISI 321)	Good intercrystalline corrosion resistance. Good resistance against heavy oil products, steam and combustion gases. Good oxidation resistance	Chemical, nuclear power plants, textile, dye, fatty acid and soap industries
550*) (1020)	1.4571 (AISI 316 Ti)	Increased corrosion resistance against certain acids due to addition of Molybdenum. Resistant to pitting, salt water and aggressive industrial influences	Pharmaceutical industry and dairies and breweries

*) As a function of the pressure load and corrosion attack, operating temperatures to 800 °C (1472 °F) are possible.

Max. Temp. in °C (°F)	Material No.	Material properties	Application range
Heat Resistant Steel			
1100 (2012)	1.4749 (AISI 446)	Very high resistance to Sulphur containing gases and salts due to high Chromium content, very good oxidation resistance not only at constant but also for cyclical temperatures (Minimum resistance to Nitrogen containing gases)	Use in flue and combustion gases, industrial furnaces
1200 (2192)	1.4762 (AISI 446)	High resistance to Sulphur containing gases due to high Chromium content (Minimum resistance to Nitrogen containing gases)	Use in flue and combustion gases, industrial furnaces
1150 (2102)	1.4841 (AISI 314)	High resistance to Nitrogen containing and Oxygen poor gases. Continuous use not between 700 °C (1292 °F) and 900 °C (1652 °F) due to embrittlement (higher heat resistance than 1.4749 and 1.4762)	Poser plant construction, petroleum and petrochemical, industrial furnaces
1100 (2012)	2.4816 (Inconel 600)	Good general corrosion resistance, resistant to stress crack corrosion. Exceptional Oxidation resistance. Not recommended for CO_2 and Sulphur containing gases above 550 °C (1022 °F) and Sodium above 750 °C (1382 °F)	Pressurized water reactor, nuclear power, industrial furnaces, steam boilers, turbines
1100 (2012)	1.4876 (Incoloy 800)	Due to addition of Titanium and Aluminum the material has especially good heat resistance. Suitable for applications, where in addition to scale resistance, highest toughness is required. Exceptional resistance to carburizing and nitration	Pressurized water reactor, nuclear power construction, petroleum and petrochemical, industrial furnaces

Tbl. 3-21: Thermowell materials

For applications at low temperatures, austenitic Cr-Ni or Ni alloys are used. They are characterized by especially high toughness at very low temperatures.

3.2.8 Ceramic Thermowells

Metal thermowells are preferred since they assure an absolute seal against the medium and the pressure. Their use is limited to temperatures below 1150...1200 °C (2102...2192 °F), because their mechanical strength as well as their oxidation resistance above this temperature range can no longer assure a sufficiently long operating life.

Ceramic thermowells, because of their comparatively poorer mechanical properties (very brittle) are only used when the operating conditions exclude the use of metal or for chemical resistance or for very high measuring temperatures. In the temperature range 1200...1800 °C (2192...3272 °F) ceramic thermowells must be used.

Installation Orientation

In order to assure satisfactory operation, a number of special aspects must be considered. Ceramic thermowells break easily and are shock sensitive, and have low mechanical strength at high temperatures.

Rules of thumb for using ceramic thermowells:

- Keep the length short
- Install vertically
- Approach higher temperate zones very slowly
- Keep away from direct vibrations
- Protect from added weight due deposits
- Avoid impact stresses from flying particles
- Store dry (best in an oven).

It is not essential that the measuring location be in the middle of the oven chamber. At a shorter distance from the wall, i.e. a shorter installation length, the temperature profile is practically constant (as long as the wall is not cooled).

Since the temperatures at the wall or at the lining in a furnace are usually less than 1200 °C (2192 °F), heat resistant steel materials can be used for such applications. The ceramic thermowell should be inserted in a metal supporting tube in order to keep the unsupported length, which might be subjected to bending forces, short. This design also has the advantage, when the temperature sensor is mounted in the support tube using the usual sliding collar/flanged stop, that it can be introduced slowly stepwise into the process zone.

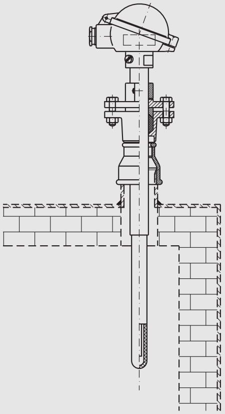

Fig. 3-37: Installation of a straight thermocouple with an adjustable mounting

Thermal Shock Resistance

The ceramic thermowell materials used have different sensitivities to thermal shock.

The ability to withstand temperature changes decreases with increasing purity of the (Al_2O_3) thermowells (C 530 > 80 % purity, not gas tight; C 610 > 60 % purity, gas tight and C 799 > 99 % purity, gas tight). Even hairline cracks in the ceramic thermowell can allow foreign materials to infiltrate and cause the thermal voltage values to drift. To prevent cracks, care must be exercised when installing or removing the thermowell from the process. It should only be subjected to gradual temperature changes.

The use of an internal thermowell made of a gas tight ceramic inside an outer thermowell made of a thermal shock resistant ceramic is advantageous. In this design, the outer thermowell protects the inner thermowell. The air layer between the two thermowells also protects the inner thermowell from a too large temperature shock. This increases the life of the temperature sensor.

Installation Information

Decisive is the temperature of the process into which the sensor is to be inserted.

If the sensor is to be installed under these conditions, then the procedure is to insert the sensor to the middle of the furnace liner, wait 10 minutes, and then continue to insert the sensor in 10 cm (3/8”) steps waiting another 5...10 minutes after each step. Using this procedure, the sensors will be preheated by the radiation from the interior of the furnace to slowly reach the medium temperature.

If these precautionary measures are not observed, the ceramic tube can be destroyed by internal heat stresses!

Ceramic thermowells		
Max. operating temperature in °C (°F)	Material No.	Material properties
1400 (2550)	C 530	Temperature change resistant, fine pores, not gas tight, shock sensitive
1500 (2750)	C 610	Gas tight, high fire resistance, average temperature change resistance, low Al_2O_3 purity, shock sensitive
1800 (3250)	C 799	Very gas tight, highest fire resistance, minimal temperature change resistance, shock sensitive

Tbl. 3-22: Ceramic thermowell materials

Furthermore, for special applications, e.g. metal melts, thermowells made of carbides or nitrides may be used.

3.3 Application Specific Temperature Sensor Designs

Hot Gas Measurements in a Furnace
A temperature sensor measures changes in gas temperatures very slowly due to the poor thermal conductivity of gases. In order to reduce large errors due to thermal radiation (cooled walls), which may exist in blast furnaces, vacuum temperature sensors are utilized. The hot process gasses are drawn off using a vacuum created with compressed air.

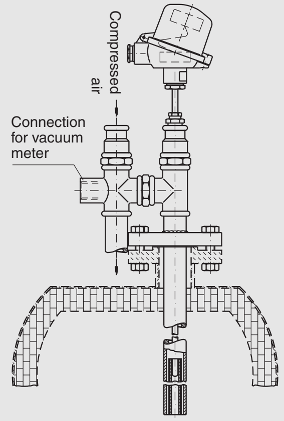

Fig. 3-38: Vacuum temperature sensor in a blast furnace

Temperature Measurements in High Pressure / High Temperature Reactors
In these applications temperature sensors with in- and outside ceramic thermowells and used. The thermocouple wires are sealed by a pressure tight connector as they exit to the connection box. To protect against aggressive fluids which might influence the thermocouple characteristics (e.g. sulphur in Claus Processes), an inert purge gas is introduced through a fitting. This creates a positive pressure in the thermowell. The purge flow can be regulated or increased using an additional outlet connection.

Purge gas will only flow if its pressure is greater than the process pressure. Only a very small purge flow is usually required. Applications include the manufacture of chemical products which require the addition of high pressure/temperature elements for the reaction (synthesis reactors, fertilizer production, etc.).

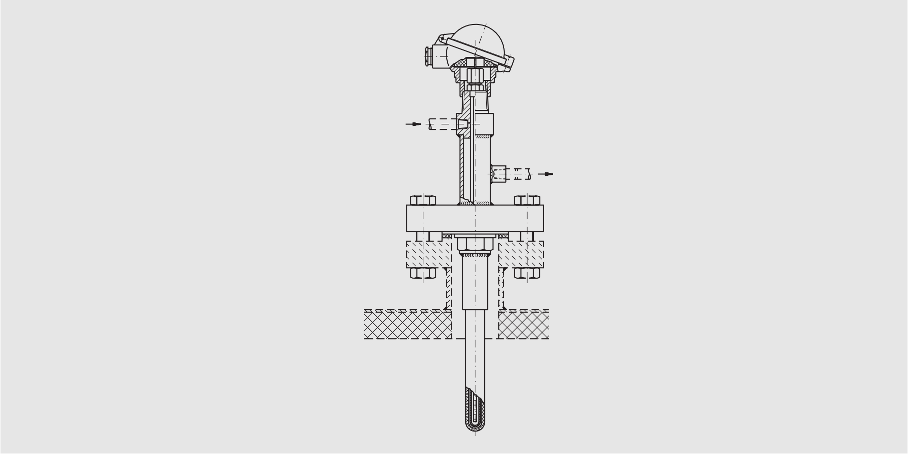

Fig. 3-39: Purged thermocouple in a high pressure reactor

Temperature Measurements in Particle Loaded Gases

For the pneumatic transport of granulates and powders a temperature measurement is often required in order to monitor the temperature to assure that the ignition limit is not exceeded. The temperature sensor, which is inserted in the flow stream is subjected to a high degree of abrasion. It is possible to counteract abrasion by installing armor coated thermowells (e.g., with Stellite, see Fig. 3-40), low wear tips made of solid materials, eccentrically drilled thermowells or by installing an deflecting impingement rod ahead of the thermowell. This temperature sensor design is used in wood and coal processing, cement and glass industries and in coal fired power plants.

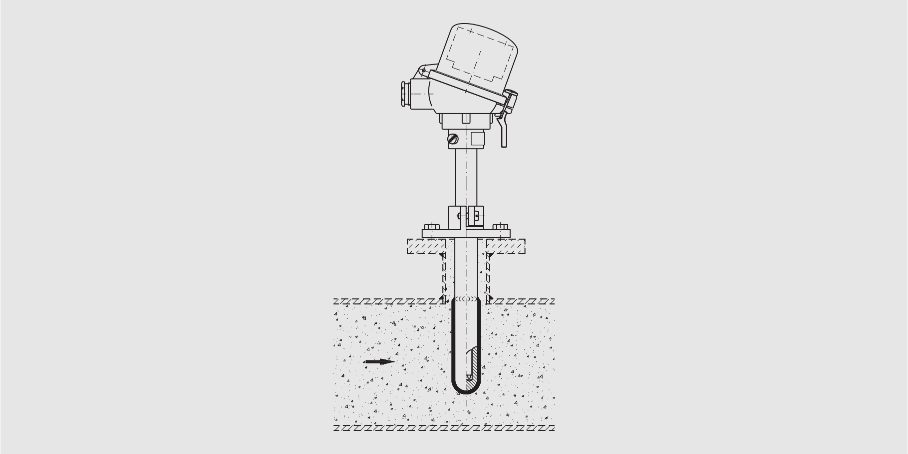

Fig. 3-40: Armor coated thermocouple in an abrasive gas stream

Temperature Measurements in Flue Gas Channels

Filter systems in smoke stacks are very sensitive to overheating. Therefore it is important to recognize a temperature increase very quickly.

Since a horizontally installed, thin sheathed temperature sensor is not sturdy enough and a minimum insertion length is required, a special design is required. The temperature sensor in this design has a support pipe upstream of the measuring element and which bent at a right angle to guide the flow.

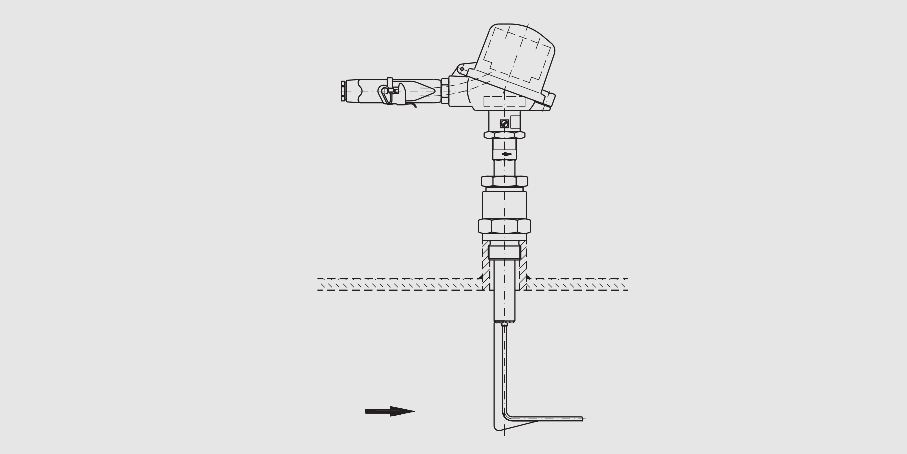

Fig. 3-41: Fast responding temperature sensor in a flow channel

Multipoint Temperature Sensors for Temperature Measurements in Large Tanks

In chemical processes the temperatures in large volumes are often monitored. Since the temperature distribution in a large tank may not be uniform, multiple measuring locations are necessary, which are distributed in a representative manner throughout the volume. Since most tanks only have a single opening at the top, multipoint sensors are used. They have a number of measuring locations within a single thermowell. Multipoint sensors with lengths up to 20 m (65 ft.) and weighing more that a ton are not uncommon.

Good heat coupling is established in thermowells by the contact between the measuring element and its inside wall. Individual designs for explosion and pressure proof applications are possible. They are used for status monitoring in liquid and solids storage tanks.

Fig. 3-42: Multipoint temperature sensors in storage tanks and process reactors

Temperature Measurements in Metal Melting and Salt Baths Using Angled Thermocouples

These temperature sensors are used primarily to measure temperatures in non-iron metal melting furnaces and salt baths for hardening. For vertical installation in open vessels an angled design is used so that the connection head and connection cables can be mounted outside of the radiating surface at the top of the furnace. Suitable materials made of thermal shock resistant ceramic are used for thermowells, as well as metal. Since the thermowell for direct immersion in the molten materials is stressed to the maximum, it is considered to be a consumable part. Its durability can be increased, if in this region, an additional protective sleeve is installed over the thermowell.

For waste incineration furnaces, rotary kilns, fluidized bed furnaces and air heater applications, thermowells made of silicon carbide, metal ceramic or porous oxide ceramic are particularly well suited because of their high temperature resistance, hardness and abrasion resistance together with their resistance to acid and alkali vapors. These temperature sensor are then not angled, but are designed as “straight thermocouples“.

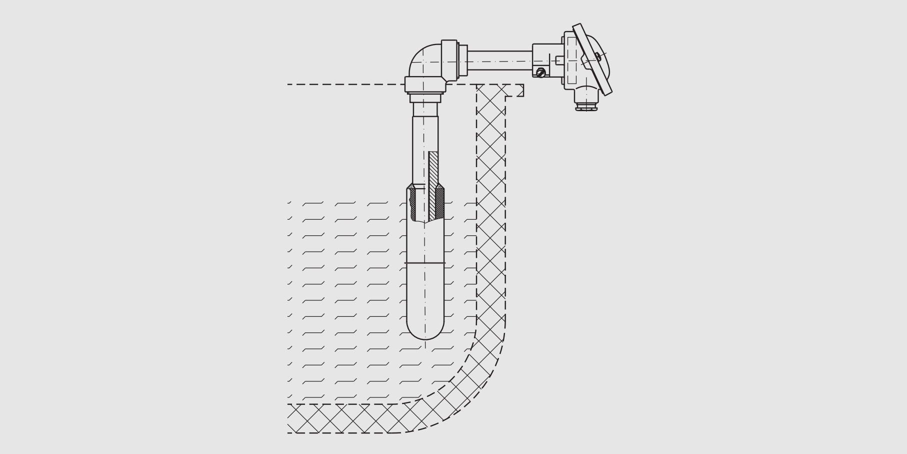

Fig. 3-43: Angled thermocouple in a crucible

Resistance Thermometers with Extremely Short Response Times

For applications where control functions require that process temperature changes be recognized very quickly, special designs have been developed. The designs are such that the measurement resistor is sintered into the measuring inset tip with using a high heat conducting material. The measuring tip itself is designed as an adapter sleeve, which fits closely into the thermowell, and becomes part of the exchangeable measuring inset. As a result of the extremely good heat transfer possible with this design, response times $\tau_{0.5}$ of less than 3 seconds can be achieved (measured in flowing water at v = 0.4 m/s (1.3 ft/s).

Temperature sensors of this design are predominantly used in the primary circulating loops in nuclear plants, as well as in safety relevant applications for energy balancing in chemical systems, where the highest safety requirements must be satisfied, even during a failure condition. Process parameters include flow velocities up to 15 m/s (50 ft./s), pressures to approx. 175 bar (2,538.16 psi) at a maximum temperature of 330 °C (626 °F).

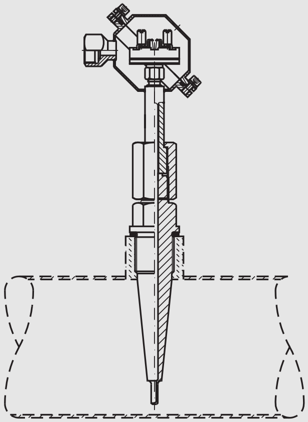

Fig. 3-44: Fast response temperature sensor in a reactor cooling pipeline

Temperature Measurements in Plastic Extruders

An exact knowledge of the product temperature during the extrusion process is an essential factor to assure the workability of the material and the quality of the end product.

The measurement is difficult because a built in sensor

- would interfere with the flow of the extrusion stream,
- must have a very rugged construction, since the processing pressures are between 300...500 bar (4,351.13...7,251.89 psi),
- would be greatly affected by exposure to the external heat jacket.

The design for this application is a massive sensor with a short length, in whose tip measuring locations at multiple steps are incorporated. Since it is not possible to prevent the effects due to external heat sources, a measurement of the temperature gradient allows a temperature determination to be made. In this way meaningful values for the temperature of the plastic mass can achieved.

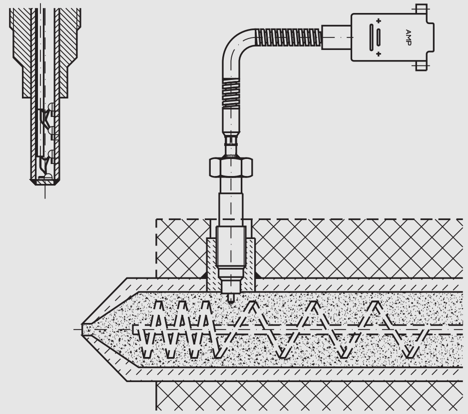

Fig. 3-45: Extruder temperature sensor

Temperature Sensors for the Food and Pharmaceutical Industries

Temperature sensors for these applications must be designed in accordance with strict hygienic requirements. This means that the construction must not have any small gaps or dead spaces, where product or residue could be deposited in the sensor. The temperature sensor must be able to be cleaned and sterilized without being disassembled. This property is classified CIP-Capable (Cleaning In Place) and SIP-Capable (Sterilising In Place). The connection head must incorporate a high level of protection, in order to remain sealed when cleaned with a steam jet.

The measuring task requires very fast response times (< 3 s) at a high accuracy, so the product quality can be maintained within tight limits. High alloyed stainless steel materials are used such as 1.4571, 1.4435 and 1.4404 (AISI 316Ti, 316L).

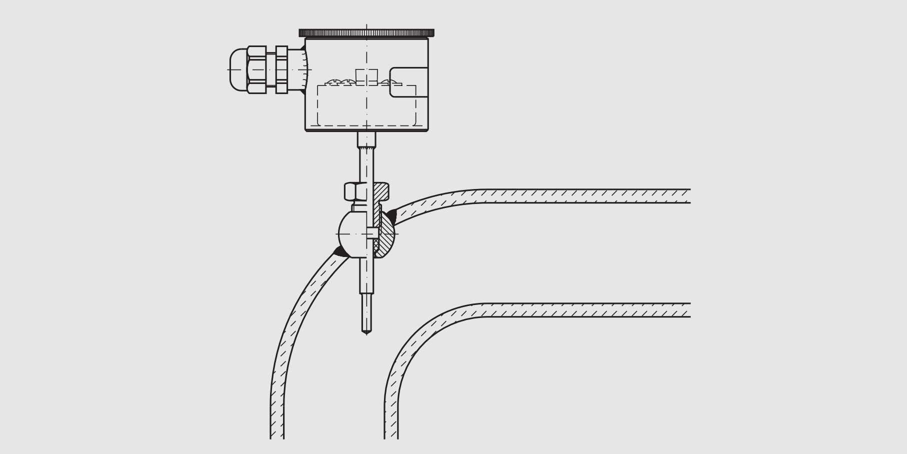

Fig. 3-46: Temperature sensor with ball type welded adapter for hygienic applications and installation at various angles

Temperature Measurements of the Tank Content with a Flush Thermowell

All sided heat contact is not always possible with an insertion thermowell, because it may interfere with the process or cannot withstand some of the forces which may occur, e.g. in tanks with stirrers, the thermowell would interfere with the wall scraping stirrer, so the measurements must be made flush with the wall.

Special measures must be considered in the sensor design to assure that:

- the sensor is thermally decoupled from the wall,
- the contact area with the medium large enough,
- the measurement will not be affected by external heat jackets.

A suitable sensor design assures that the sensor element is in contact only with the interior of the tank and not with its mechanical mounting arrangement.

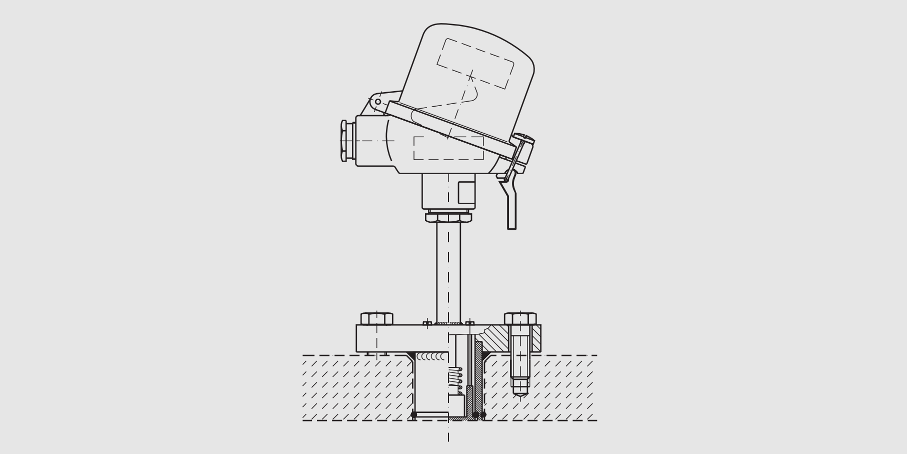

Fig. 3-47: Flush tank wall installation of a temperature sensor

Temperature Sensors for Heat Quantity Measurements

Since heat energy is very expensive, cost effective balancing is required with very precise measurements. The requirements relative to the design and allowable measurement deviations for heat quantity sensors are defined in the Standard EN 1434-2. Because the accuracy requirement for the sensor pair is in the range of 0.1 °C (0.18 °F), it is very important, that in addition to the correct selection of the sensor, the relationship of the sensor mass to the installation length be considered in order to prevent any external influences from effecting the measurement.

Temperature sensors without thermowells with extremely short measuring resistors are used to allow an exact measurement to be made in the center, as required, of the usually small diameter pipelines while minimizing the heat loss.

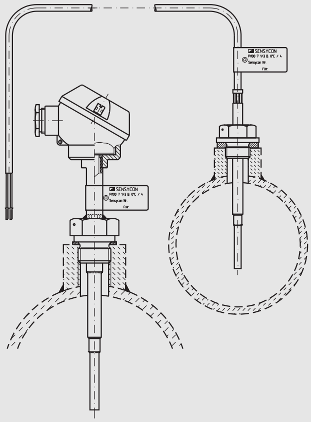

Fig. 3-48: Temperature sensors for the heat quantity measurements

Temperature Measurements on Surfaces

The surface temperature measurement has gained increasing importance. For a variety of reasons (measuring location hard to access, sterility of the system, no disturbance in the flow circuit, etc.) the direct insertion of temperature sensors into the process loop is often undesirable. For such applications, the non-contacting infra-red measuring methods are not the only ones used (see chapter 4). Surface temperatures are measured using contacting temperature sensors especially in applications where undefined or changing conditions relative to the emission coefficient ε may exist. A differentiation is made between two basic methods, a portable system (sensors positioned manually, touch sensors) and a system with sensors permanently mounted on the surface. For process systems, only the permanently mounted sensors are of importance.

For temperature measurements on the surface of bodies a basic knowledge of the temperature difference between the surface and the enclosed medium must be known. Surface sensors operate within a defined temperature gradient range.

Errors may result when making surface temperature measurements due to effect of the sensor (interference) itself on the surface temperature (undisturbed).

When applying surface temperature sensors it follows that not only the actual errors in the sensor itself must be determined by a calibration, but also, the magnitude of the effect the temperature sensor has on the surface temperature itself must be determined. The correct application of surface temperature sensors requires extensive experience in the field of temperature measurement technology. Requesting technical, application oriented recommendations from the temperature sensor manufacturer are recommended.

To keep the heat removal by the measurement element as small as possible, its mass should be a minimum. For small surfaces, thermocouples, because of their small mass with diameters of 0.5 mm (0.020“) are often used.

Sensor mounting methods vary for each installation. They can be mounted using soldering, welding, screwing or held in place by a spring. For larger cross sections, resistance thermometers are also used. They are designed as bottom sensitive types for the specific mounting arrangement (tangential/axial). They are either held in place by a pipe clamp or clamped using a metal plate screwed onto the surface.

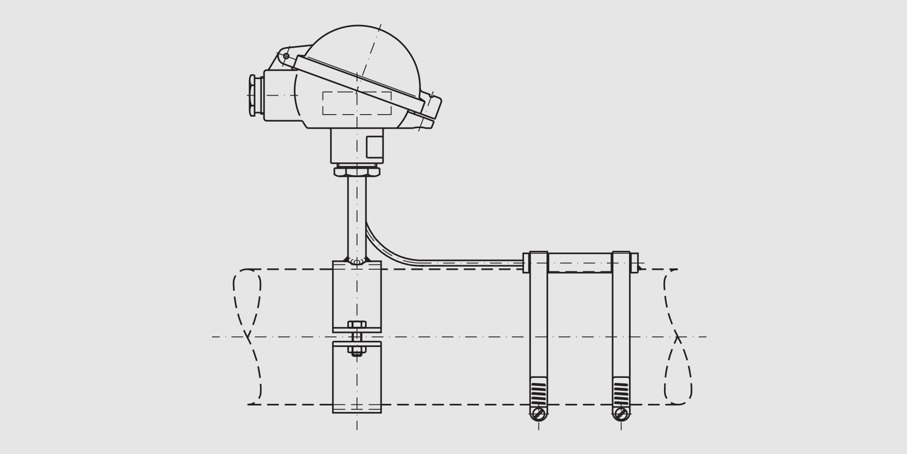

Fig. 3-49: Measurements on a pipe surface

Pipe Wall Temperature Measurements in Heat Exchanger Pipes

In heat exchangers e.g., a liquid medium is pumped through a pipe bundle installed within a hot gas filled tank. Due to the large contact area, the medium approaches the temperature of the gas. Since the temperature and pressure in the pipes is usually high, near the material limits, monitoring the wall temperature of the pipes is necessary, in order to prevent over stressing the materials and possibly rupturing the pipes.

The design of a suitable sensor must assure good contact with the wall without, due its own mass and its contact with the hot gas, produce erroneous results. Since operating temperatures may reach approx. 560 °C (1040 °F), the use of conventional insulating materials is for all practical purposes excluded. The solution for this problem is a sensor with a mineral insulated cable with a V-shaped knife edge whose measuring section is bent toward the inner wall and welded to assure good contact with the pipe wall. In this design, the welded portion forms a cap over the measurement element and which is at the same temperature as the pipe wall. To compensate for the temperature differences, additional compensating windings are incorporated.

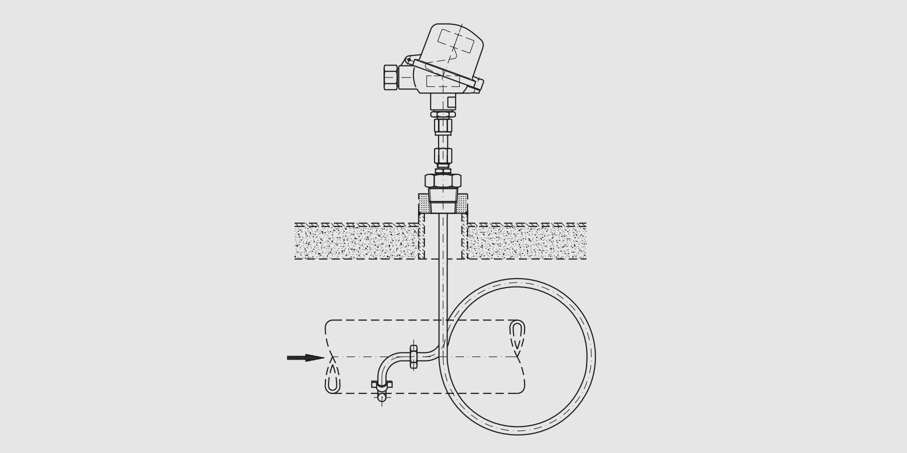

Fig. 3-50: Measurements on a pipeline in a heat exchanger

Temperature Measurements in Housings and Walls

In order to measure the temperature in solid bodies, the measuring element is positioned in a hole drilled into the object to be measured. The hole itself and the measuring element disturb the temperature field, so that measurement errors result. The measurement error increases as the size of the hole increases in relation to size of the object and how different the heat conductivity of the inserted temperature sensor is from that of the object.

Guidelines for the ratio diameter/depth of the hole for temperature measurements in objects are:

- With good heat conductivity 1:5
- With poor heat conductivity 1:10 to 1:15.

The solution is a sensor consisting of two independent, spring loaded mineral insulated thermocouples, which due to their small mass form point shaped measuring locations which essentially assure an error free measurement. These temperature sensors are used, among others, in high, thermally stressed elements in power plants.

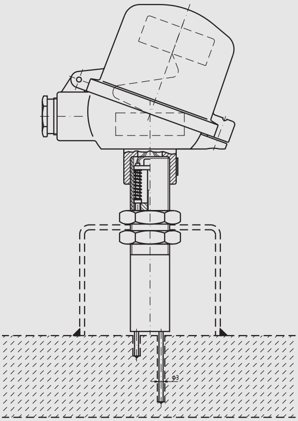

Fig. 3-51: Difference temperature measurements within a wall

Temperature Measurements in Bearing Shells and Housings

To measure the temperature of a housing a small hole is usually added with a minimum depth. This requires temperature sensor designs with very short, temperature sensitive lengths. They are usually pressed against the bottom of the hole by a spring to assure good thermal contact. Silver tips are also used to optimize the heat transfer. Since, e.g., there are enormous vibration forces present in Diesel motors, the measuring sensors must be designed with an extremely rugged internal construction coupled with the use of reinforced springs.

These temperature sensors are used to measure bearing temperatures in pumps, turbines, blowers and motors. For use in large Diesel motors in ships, type tests are also required by the Ship Classification Societies such as Lloyds Register of Shipping, German Lloyd and others.

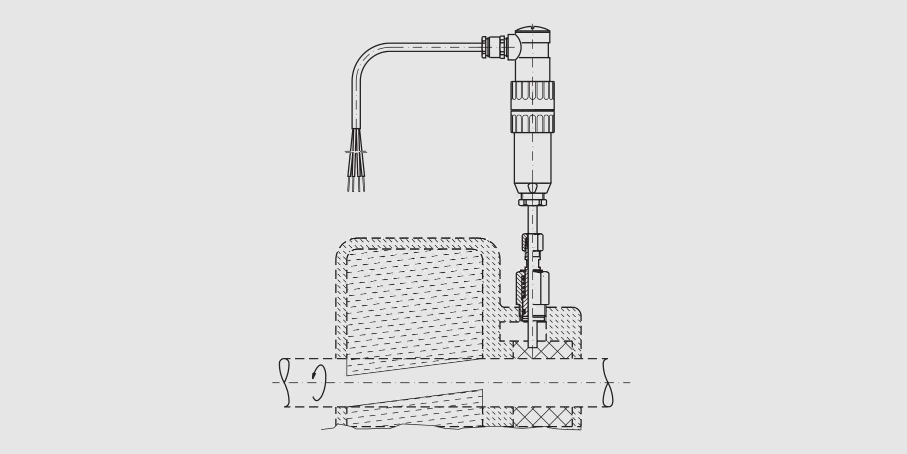

Fig. 3-52: Temperature measurements in pump bearings

Temperature Measurements in Brakes and Railroad Train Axles

To monitor the brakes in high speed trains, temperature sensors with the following characteristics are required:

- Small, rugged design,
- resistant to high mechanical shocks,
- special measuring surfaces, which can be mounted as close to the rubbing surfaces (brake linings) as possible,
- fast response.

An appropriate design is a small, spring loaded sensor with a conical seat mounted in the brake caliper housing.

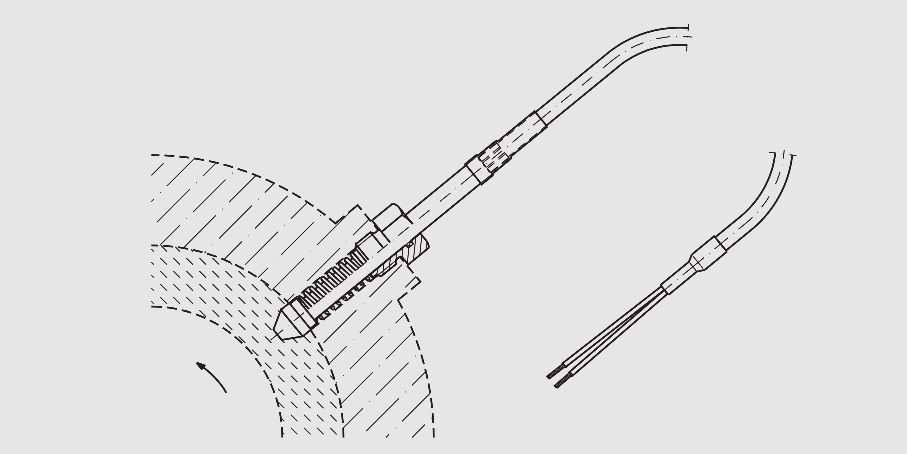

Fig. 3-53: Temperature measurements in a brake caliper

3.4 Dynamic Response of Temperature Sensors

3.4.1 Introduction

The dynamic response of a temperature sensor describes the reaction of its output signal to a change in the temperature of the medium being measured.

When making contacting temperature measurements, the temperature sensor is in direct contact with the measured medium. The temperature which exists, after a equilibrium state is reached, is a “mixed temperatures“ consisting of the original temperature of the temperature sensor and the temperature of the measured medium. In general, the thermal mass of the measured medium is decidedly greater than that of the temperature sensor, so that this “mixed temperatures“ and the temperature of the measured medium are the same.

When the temperature of the measured medium $T_M(t)$ changes, the temperature sensor reacts. Its output signal $T_S(t)$ approaches the new temperature. Finally when the output signal of temperature sensor no longer indicates any measurable changes, the stationary status is reached.

During this time period the time related difference is

$$\Delta T(t) = T_S(t) - T_M(t)$$

which is defined as the dynamic measurement error. The dynamic response of a temperature sensor is almost exclusively a function of the equalization processes occurring between the measured object or medium, the temperature sensor and the ambient conditions.

Information about the basic values of the dynamic response of the temperature sensor are required e.g. to estimate the response time after a sensor is inserted into a medium at constant temperature, for the measurement or transmission of fast temperature changes and for use in temperature controlled circuits.

3.4.2 Step Response and Transfer Functions, Response Time and and Time Constants

If a temperature sensor is at a starting temperature T_{S0}, e.g., the ambient temperature T_{Amb}, at time t = 0 is brought into thermal contact instantaneously with a measured object or medium at a constant temperature T_M, e.g., by contact or immersion, a thermal equalization process begins. From a curve of the sensor temperature $T_S(t)$ as a function of the time, the so called step response, the value of primary interest is the response time t_R which is the time when the dynamic measurement error becomes less than a meaningful, defined portion of the measurement uncertainty δ from the starting temperature difference $T_{S0} - T_M$:

$$T_S(t_R) - T_M \leq \delta\,(T_{SO} - T_M)$$

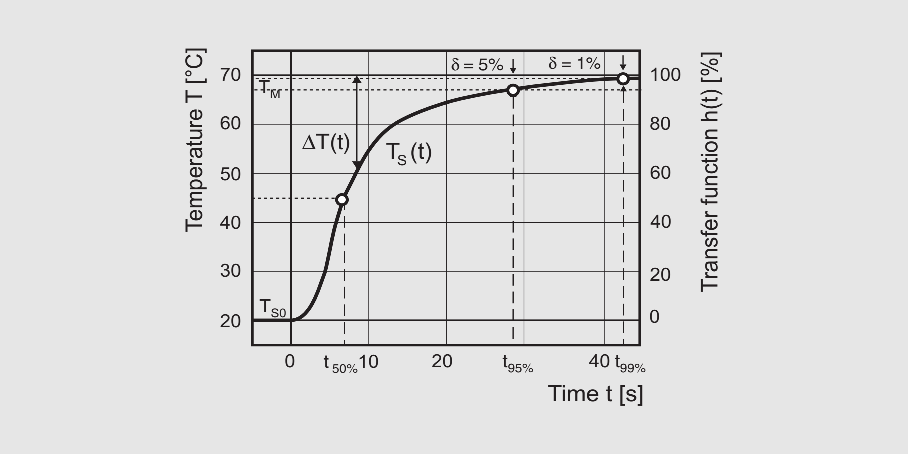

Fig. 3-54: Typical response time curve (step response) also called transfer function of a temperature sensor

The characteristic value for the temperature sensor is its response time. It is called the time constant:

T_{05} and T_{09} are the times the temperature sensor requires to detect 50 % (90 %) of a temperature step change. The magnitude of the temperature jump is of lesser importance. Therefore, the response to a temperature change by the temperature sensor is a function of the remaining temperature difference from the temperature of the measured medium. The temperature of the measured medium will only be reached exactly at t = ∞.

3.4.3 Establishing the Dynamic Values

According to VDI 3522 and EN 60751 the following two measurement conditions are recommended to determine comparable dynamic values:

air: $T_A \approx 25$ °C (77 °F), $v_A = (3 \pm 0.3)$ m/s ($\rightarrow \alpha_A$)

water: $T_W \approx 25$ °C (77 °F), $v_W = (0.4 \pm 0.05)$ m/s ($\rightarrow \alpha_W$)

When these values are to be converted to other application conditions, the effective heat transfer coefficient for the measurement conditions must be known. They can be estimated from values listed in the VDI-Heat Atlas.

Listed in the following table are the values at the above stated standard measuring conditions.

D [mm]	0.2	0.4	0.6	0.8	1	2	4	6	8	10	20
[inch]	0.008	0.016	0.025	0.031	0.039	0.079	0.157	0.236	0.315	0.394	0.787
α_A [W/m^{2}K]	414	290	237	205	184	132	95	79	70	64	47
α_W [W/m^{2}K]	28910	20540	16890	14700	13260	9670	7190	6100	5460	3990	3260

3.4.4 Influencing Factors

The values T_{05} and T_{09} are dependent on the installation parameters, the temperature sensor and the measured medium.

The Main Factors are

For the measured medium:
- heat capacity,
- heat coefficient,
- heat transfer coefficient to the temperature sensor,
- flow velocity.

For the temperature sensor:
- size (generally the diameter),
- weight,
- materials used,
- internal construction.

The influence factors for the measured medium are given values. These can hardly be optimized. For the temperature sensor however, there are a number of measures which can be taken to shorten the response time.

The most important are:
- reduction of the diameter in the region of the sensor,
- reduction of the mass in the region of the sensor.

These two measures are interrelated.

The temperature sensor only reaches a constant condition when its temperature is homogeneous. A total warming of the sensor is reached quicker in smaller sensors than in larger ones. It is important to assure, if such measures are taken, that the mechanical stability is not overloaded.

The thermowell geometries are also factors affecting the optimization of the response time, as well as the mechanical requirements.

- Position the sensor in the middle of the pipe

When laminar flow exists, then the highest flow velocity of the measured medium is in the middle of the pipe. If such measures are employed, assure that the mechanical stability is not jeopardized. Sensor installation examples see chapter 3.2.

Another means which can be utilized to achieve faster response is to use thermally conductive coupling materials, e.g. heat conducting paste (for T_{max} < 200 °C (392 °F)), or the use of thermowell points made of good heat conducting materials. The multitude of sensor geometries preclude the presentation of a complete listing.

The effect that the design and dimensions have on the dynamic response of a temperature sensor as well as its construction and especially the heat transfer conditions is shown in Fig. 3-55. The very different responses to a step change are shown for the same measuring conditions (flowing water) and the same resistance thermometer measuring inset (Ø = 6 mm (0.236”)), due to the addition of a thermowell and finally, due to addition of a corrosion resistant PFA coating 0.5 mm (0.020“) thick.

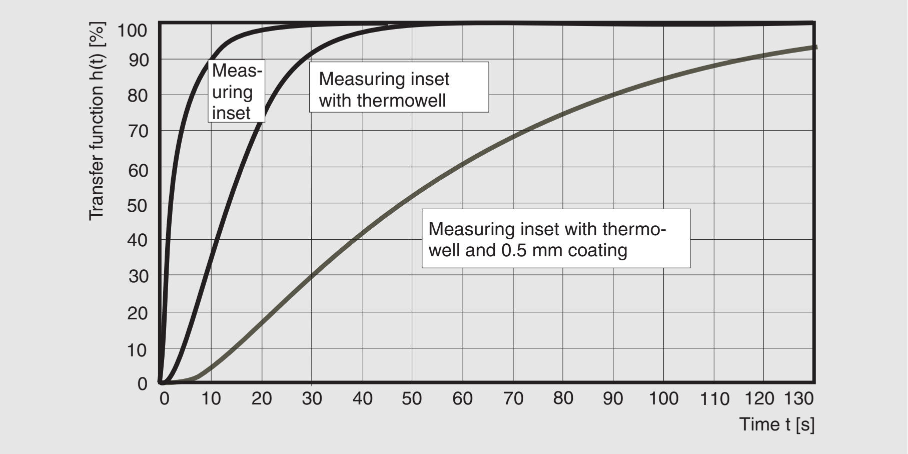

Fig. 3-55: Transfer function for resistance thermometers of different designs in water v_W = 0.4 m/s (16 ft./s), T_W = 25 °C (77 °F)

3.5 Aging Mechanisms in Temperature Sensors

Temperature sensors, during use, are subjected to application related aging effects. These complex processes, which define the long term characteristics of the sensor in an application, are generally categorized as “drift“. They are the result metallurgical, chemical and physical effects.

The quantitative effects are primarily due to the temperature itself. The consequences of these effects are seen in a drift resulting from the changes in the thermal voltages or resistance values. The values of the thermal voltages and resistances, continually change from those defined in the Standard Value Tables or the Standard Value Series for the ideal temperature sensor.

The causes can be roughly divided into two groups:

- drift, due to mechanical damage of the temperature sensor or the sensor element,
- drift, due to metallurgical changes in the sensor.

It can be stated that mechanical damage is almost always the catalyst for metallurgical changes in the sensor materials.

3.5.1 Drift Mechanisms for Thermocouples

K-State (Short Range Ordered State)

This effect is not actually drift, because its result can be eliminated by appropriate heat treatment of the sensor. The technical effect is essentially identical to normal drift characteristics. Since Type K (NiCr-Ni) thermocouple is the most commonly used thermocouple, and since many users are unaware of these K-State problems, this problem will be presented in detail. The NiCr-leg of Types K (NiCr-Ni) and E (NiCr-CuNi) are subjected to a special effect, which occurs when the wires are cooled quickly from temperatures in the range of 400...600 °C (752...1112 °F), causing a change in the thermal voltages (essentially undefined).

This effect, often called an approximation effect, alters the structure of the individual lattice elements and is usually referred to as K-Effect or K-State. Practically all metals of technical importance, solidify either as face-centered-cubic metals (Nickel), body-centered-cubic metals (Chromium) or as hexagonal-lattice metals (Zinc). There are also other solidification forms with tetragonal, rhombic lattice structures as well as others.

For an ideal, pure metal, all the lattice spaces would be occupied by atoms of the same element during solidification. For the NiCr-alloy, an important thermocouple material, which solidifies as a face-centered-cubic lattice (Fig. 3-56) in which the lattice spaces are occupied by atoms of the individual alloy components (Nickel and Chromium) resulting in a mixed crystal. Viewed submicroscopically, the lattice structure of a melt as it solidifies, has the same proportion of individual atomic elements as the stoichiometry of the composition of the alloy.

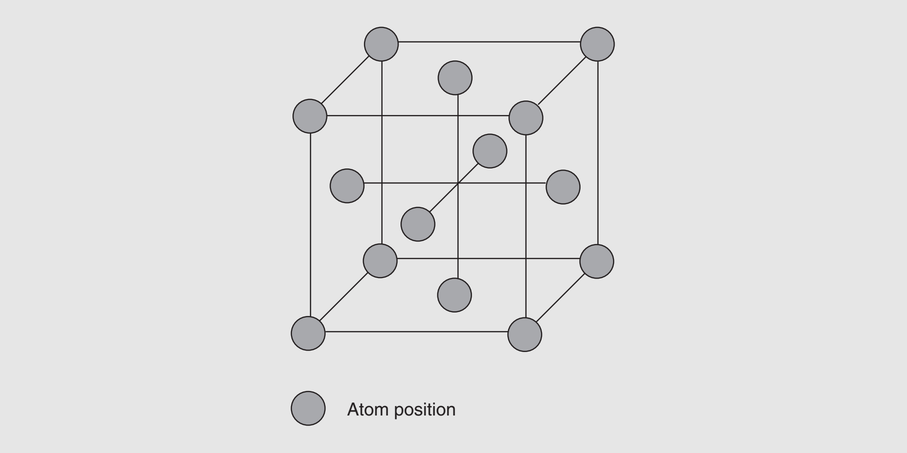

Fig. 3-56: The face-centered-cubic crystal lattice

Considering the atomic structure of a NiCr-crystal more closely, the resultant lattice occupancy by Ni or Cr atoms is dependent on the rate of cooling of the molten metal. Starting by considering a NiCr-alloy, which is at a temperature above 600 °C (1100 °F), the atoms are diffused into the crystal structure, which corresponds to a face-centered-cubic lattice in which the former atoms of the “crystal“ are formed by Chromium atoms, the central atoms by of the individual faces by Nickel. Observing this structure perpendicular to a face, then the positions of the Ni- and Cr-atoms is as shown in the following figure.

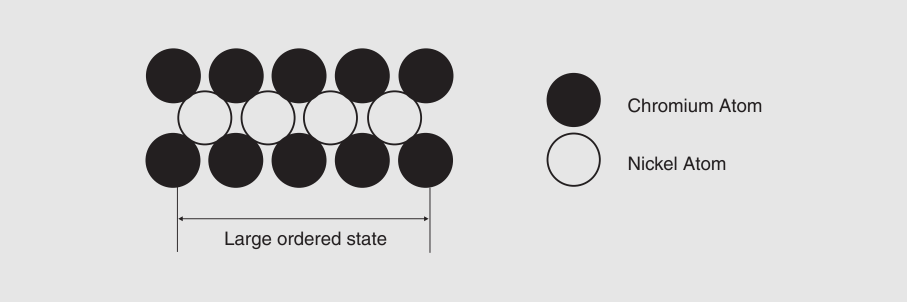

Fig. 3-57: The large-range-ordered state structure of the Ni and Cr atoms at temperatures > 600 °C (1112 °F)

If the NiCr-leg of a Type K thermocouple is used in a large-range-ordered state (U-State) always at temperatures > 600 °C (1112 °F), then reproducible thermal voltages will result. If this NiCr-leg is slowly cooled (< 100 K/h) to temperatures < 400 °C (752 °F), then an atom structure will be formed called short-range-ordered state (K-State) (Fig. 3-58). In this condition, the typical large-range-ordered state structure (Cr atoms at the corners, Ni atoms in the center of the faces) is found in small sections of the lattice, interspersed with “distorted“ lattice areas.

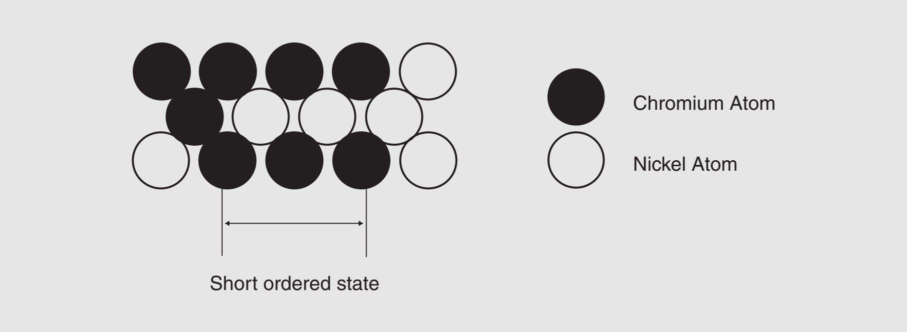

Fig. 3-58: The short-range-ordered state structure of Ni and Cr atoms

This lattice structure also produces reproducible thermal voltages. However, if the cooling from temperatures > 600 °C (1112 °F) occurs very quickly, then the atoms do not have sufficient time to move from a large-range-ordered state structure into a short-range-ordered state structure. The result is a mixed structure somewhere between the two regular structures described above, i.e. an arbitrary structure, which is in effect an unordered structure (Fig. 3-59). The positioning of the Ni and Cr atoms in any arbitrary structure to each other is possible, dependent on the starting temperature and the time profiles of the cooling.

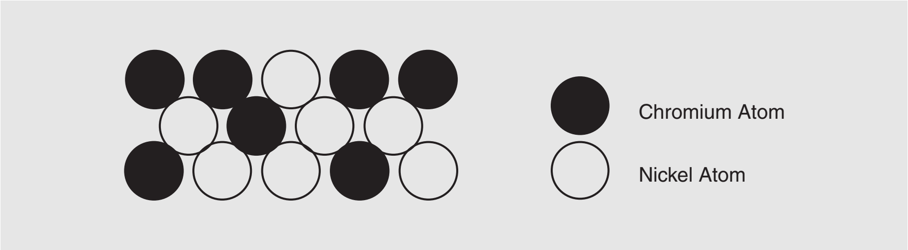

Fig. 3-59: An unordered state

If a NiCr-leg, which has an unordered atomic structure due to rapid cooling, is allowed to remain for a longer period of time at temperatures < 400 °C (752 °F), then, as a result of thermal diffusion the atoms will gradually revert to the short-range-ordered state structure. In the unordered condition and in the transition phase to a short-range-ordered state structure, the thermal voltages generated by this leg changes. A thermal voltage change equivalent up to 5 K can occur and cause erroneous measurements. For the accuracy and reproducibility, the generated thermal voltage and therefore the suitability for measurement and control functions, the as received condition of the Type K thermocouple is of decisive importance.

The last step in the manufacturing of thermocouples or mineral insulated thermocouple cables is always an annealing above 600 °C (1112 °F), to relieve the stresses which resulted from cold working the material. The NiCr-leg therefore has a large-range-ordered state structure. This is followed by rapid cooling in order not to impair the weldablility of the sheath material of the mineral insulated thermocouple cables. The NiCr leg is then in an undefined transition stage, previously described, between K and U. A new thermocouple delivered in a transition stage will quickly change to the K-State, provided the temperature at the measuring location is > 600 °C (1112 °F).

In the temperature gradient region between the hot and cold ends, a slow transition to the U-State occurs. Continually changing thermal voltages are the result, which only stabilize after the transiting phase has been completed. The values can vary appreciably from the thermal voltages of a new, as received, thermocouple. Only thermocouples, that are shipped in the “set“ K-State (this can be accomplished by a second, more complex final annealing and by a slow, defined cooling under an inert gas), provide immediate, stable temperature indications. Also to consider is that in the ordered structure state the NiCr-leg, and thereby the thermal voltages it generates, in the temperature range between 250 °C and 600 °C (482 °F and 1112 °F) is relatively undefined. This makes the use of Type K thermocouples for measuring rapidly changing temperatures of limited applicability, since the thermal voltage changes, that occur during the crystal transition stage, are a type of signal hysteresis.

A remedy is to add a small amount of Silicon to the alloy for both legs (in thermocouple Type N, NiCrSi-NiSi), which appreciably reduces the short order effects to the point where they, for all practical purposes, are negligible. It should be noted that the replacement of Type K by Type N thermocouples has proceeded very slowly in technical applications.

Selective oxidation of Cr

When using NiCr-alloys (typically used in Type K thermocouples) exposed to an oxygen poor, neutral or reducing atmosphere in combination with moisture. Green rot occurs in the temperature range between 800 °C and 1000 °C (1472 °F and 1832 °F) a selective Chromium oxidation of the NiCr-leg occurs. Under the described conditions the stabilizing, continuous coating of Nickel oxide cannot form, similar to the condition when an excess of Oxygen is present. The Chromium in the conductor is depleted, the composition of the alloy changes and the thermal voltages decrease dramatically. The thermal voltage for a thermocouple damaged by Green rot corresponds to the temperature difference between the temperature at the measuring location if no wire damage had occurred and the reference junction. The measuring location has effectively moved from the tip to the “back“. Measuring errors caused by Green rot can be as large as a few 100 °C (212 °F). The Ni-leg is not subjected to Green rot.

Radioactive Radiation

The α- and β-rays have practically no effect on the output signal of a thermocouple. The γ-rays however heat the measuring location and dependent on the intensity and volume exposed to the radiation, cause errors of several hundreds of degrees. Thermal neutron radiation however, changes the thermal material itself. Neutrons are absorbed as a function of the cross section of the material. The subsequent radioactive decay causes conversion in stages into other elements with different thermal properties. The type and duration of the conversion is a function of the radiation dosage. Materials with a smaller absorption cross section experience only small changes while materials exposed to higher absorptions are quickly and completely converted.

The following effects occur in the most important thermal materials:

- Rhodium has a high absorption cross section and is converted within a short operating time.
  Thermocouples Types R, S and B are therefore unsuitable for applications where neutron radiation exists.
- Tungsten-Rhenium thermocouples experience changes in both thermocouple legs, measurement errors up to 15 % are possible.
- Nickel-Chromium wire is also converted. The Iron and Copper in the structure are enriched and the Cobalt and Manganese depleted.
- Nickel- or Platinum wire experiences practically no changes.
- The insulation material of mineral insulated thermocouples experience a reduction of the insulation resistance. A continually increasing error is the result.

Impurities in the Alloys of Thermocouple Materials

In order for a thermocouple to generate thermal voltages, which are defined in the basic values in the standards, the composition of the alloys in the legs of the thermocouple must conform exactly to the specifications. The thermal voltages generated by the thermocouple are very sensitive to minor changes in the alloy composition and therefore to the presence of any traces of foreign materials. The thermal voltage reacts to the presence of foreign materials to such a degree, that alloys which have been tested using a spectrum analyzer and found to have nominally the same composition (within the resolution of the instrument) can consistently generate different thermal voltages.

The following table shows the effect of typical impurities on the thermal voltage of a wire made of pure Platinum (purity > 99.99 %).

Element	dU_{th} (μV/ppm)
Fe	2.30
Ni	0.50
Ir	0.35
Mn	0.32
Rh	0.20
Cu	0.12
Pd	0.07
Ag	0.03
Au	-0.07
Pb	3.00
Cr	4.04

Tab. 3-23: Influence of impurities on the thermal voltage (dU_{th}) of Platinum

That a material is suitable for use as a thermocouple material is first apparent during its calibration, after it has been used to manufacture a thermocouple. Foreign materials can not only infiltrate during the production of the thermal material from the melt, but also during manufacture or further processing of the thermal wire to the point, where an originally “usable“ material can be turned into an “unusable“ one due to the presence of foreign materials. The greatest changes in the wires of a thermocouple occur during their actual operating period. These changes occur due to the infusion of foreign materials, caused by contact with the materials contained in the ambient atmosphere. The major factor for accelerating the diffusion process is the temperature itself. The combination of unfavorable installation conditions and high temperatures can result in the “poisoning“ of the thermal materials. This is particularly true for precious metal thermocouples made of Platinum.

The Most Common Cause of Contamination:

- Pure materials, such as Copper, Iron and Platinum, experience aging effects primarily from the diffusion of foreign materials into them.
- Typical Platinum poisons are Silicon and Phosphorous, whose diffusion rate accelerates above 1000 °C (1832 °F). It accelerates the effects due to the catalytic action of the Platinum. Silicon quickly alloys with Platinum to form an eutectic, brittle alloy, which begins to melt at 1340 °C (2444 °F) and after a few minutes at the high temperatures can cause the thermocouple to fail. Here it is essential that only high purity Aluminum oxide (Al_2O_3) be used for the insulation material, because it only contains very small traces of Silicon.
- When using Pt-thermocouples the Rhodium slowly wanders over the weld area into the Pt-leg and increases or displaces the measuring point. This leads to measurement errors, as soon as change reaches the area of the temperature gradient.
- For alloys such as CuNi, NiCr or PtRh start-up drifts may be observed which can be attributed to the relaxation of the stresses in the structure introduced during manufacture. The drift effect continues to slow down, but it is never completely eliminated.
- For NiCr-alloys the diffusion of Sulfur is the most common, which diffuses into the grain boundaries and destroys the material.
- NiCr-Ni thermocouples exhibit over longer time periods, relative to impurities, in comparison, a smaller aging effect, because the individual legs drift in the same direction effectively compensating the drift effect of the thermocouple (Fig. 3-60).

- Through the use of suitable ceramic and sheath materials for the mineral insulated cables of the thermocouple Type K, a surface oxidation (intentional pre-aging) of the wires can be achieved. These protective oxide coatings can multiply the useful operating period (Fig. 3-61).

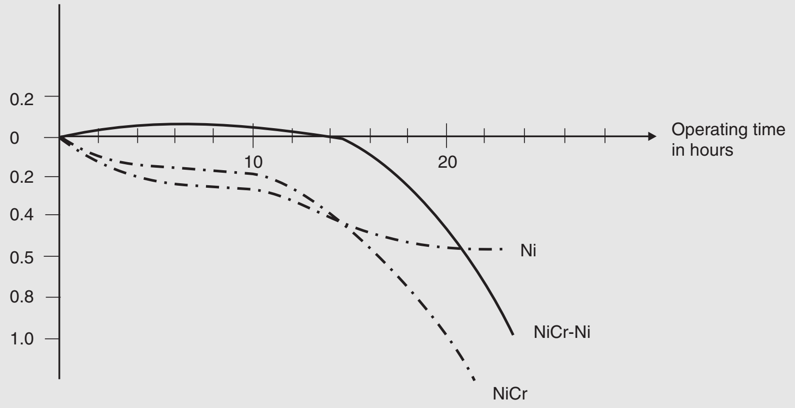

Fig. 3-60: Typical aging of NiCr-Ni thermocouples at 1200 °C (2192 °F)

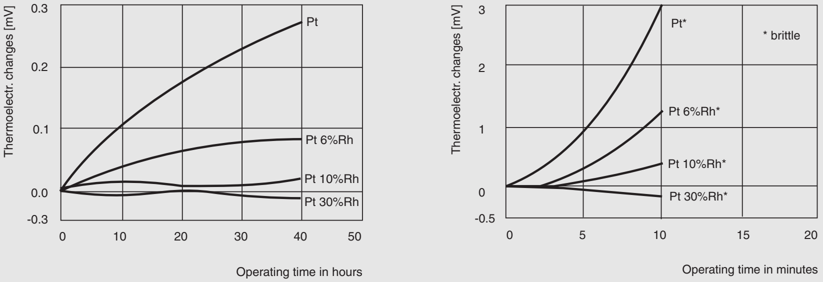

Thermomwell contains reducing Silicon Dioxide

Thermomwell contains oxidizing Silicon Dioxide

Fig. 3-61: Aging curves for Platinum thermocouples inside thermomwells containing SiO_2 in reducing and oxidizing atmospheres

Material	Properties				
	Portion Al_2O_3 in %	Density in g/cm^3	Temperature change resistance	Max. operating temperature in °C (°F)	Electrical resistance in Ω / cm
Alsint 99.7 1)3)	99.7	3.80...3.93	good	1700 (3092)	10^{14}
Pythagoras 1800 1)3)	76	3.10	very good	1600 (2912)	10^{13}
Pythagoras 1)3)	60	2.60	good	1400 (2552)	10^{13}
Silimantin 60 1)	73...75	2.35	very good	1350 (2462)	No specs.
Degussit Al23 2)3)	99.5...99.7	3.7...3.95	good	1950 (3542)	10^{14} (RT)
Degussit Al24 2)	99.5...99.7	3.4...3.6	very good	1950 (3542)	10^{7} (1000 °C (1832 °F))
Degussit Al25 2)	99.5...99.7	2.8...3.1	very good	1950 (3542)	10^{4} (1500 °C (2732 °F))

1) Trade name of the company Haldenwanger
2) Trade name of the company Friatec (previously Friedrichsfeld)
3) Gas tight materials (all others are more or less porous)

Tab. 3-24: Properties of ceramic insulation materials

Changes in the Thermal Voltages due to Mechanical Deformations of the Wire

When processing metallic materials for manufacturing thermocouples, it is important to recognize the effects that forming the materials has on the thermal forces. Many extensive investigations of this subject have been conducted in the past (Borelius, Tamman and Bandel). Thermal force differences exist between the hard drawn and soft annealed conditions of a thermocouple wire in an order of magnitude of approx. 1µV/K. This effect must be considered, especially for precious metal thermocouples, because the thermal forces are by their nature, small. For these thermocouples the effects already described can cause appreciable measurement errors. In other words, twisting the wire may produce comparable effects.

If a thermocouple is made of wires in their hard drawn condition, (wires which were not subjected to a recrystallization annealing), then during the operating life of the thermocouple the thermal voltages will not be stable, which can be traced back to the slow transition of the wire from a hard to a soft condition. When manufacturing thermocouples, especially those made of Platinum thermocouple wire, it is imperative that the wire first be stabilized by annealing (soft-annealing).

Mechanical stresses in the thermocouple wire can cause disturbances in the crystal lattice structure. Bending the wire over a sharp edge or repeated bending with a very small bending radius can lead to appreciable changes of the thermal voltages.

Changing the Thermal Voltages due to Coarse Grain Formation

Metallic materials drawn down to fine wire sizes are subjected to accelerated grain boundary growth after longer exposure to higher temperatures. This growth leads to the formation of larger and larger grains, so called coarse grain formation. in certain instances this can result in the entire cross section of a thin wire consisting of only a few grains. This not only decidedly reduces the mechanical strength of the wire, but also changes its thermal forces. This effect can be observed especially in the negative legs of thermocouple Types R and S, which are made of unalloyed Platinum materials. It is for this reason that some manufacturers offer a Platinum thermocouple wire with a fine grain quality. Special elements are alloyed into this material, which appreciably reduce the grain boundary growth without affecting the thermal voltage.

Changes in the Insulation Resistance

A simplified circuit diagram for a temperature sensor includes a signal source and a network of serial and parallel resistors (Fig. 3-62). The serial resistors in a real temperature sensor are made up of the resistors in the connection leads and the resistance at the connection terminals or plug contacts. The parallel resistors result from the non-ideal behavior of the insulation materials, which are used to electrically insulate the cable and connection wires from each other in the measuring inset.

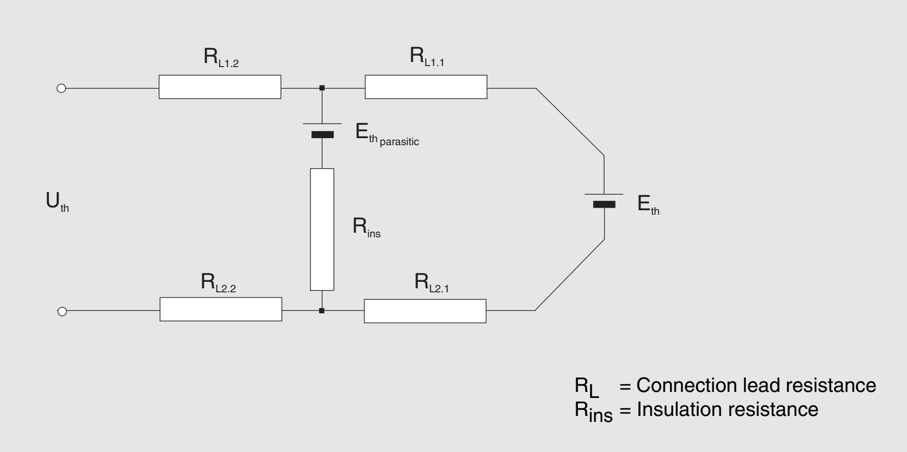

Fig. 3-62: Simplified electrical circuit diagram for a thermocouple

When using thermocouples the changing series (connection leads) resistances play only a subordinate role in the aging processes, as long as they are not subjected to a continuous mechanical wire connection, which could completely disable the thermocouple due to lead breakage. A decrease in the insulation resistance however can result in appreciable errors in the output signal of the thermocouple.

A reduction in the insulation resistance may have a number of causes.

- In simple thermocouples, made using insulated thermocouple wires, the insulation properties of the wire insulation can be permanently damaged by a single exposure to an excessive temperature and made useless.
- For thermocouples, which are designed as measuring insets using a mineral insulated cable, the insulation capability of the insulating ceramic (Al_2O_3 or MgO) can be strongly limited by moisture absorbed or bound in the ceramic material.

Moisture can enter undetected during the manufacture of the product, e.g. if the mineral insulated cable is exposed for a longer period of time with unprotected ends to the normal humidity in the air. The ceramic materials used are extremely hygroscopic, and bind in the moisture as crystal water. Moisture can also be absorbed by a thermocouple during use if it is mechanically damaged. In addition, the insulation properties decline sharply for these materials at higher temperatures (approx. one order of magnitude /100 K), so that for temperatures in the range from 1000 °C (1832 °F) and above, the actual reason for using the insulation no longer exists.

This is caused, at higher temperatures, by the increase in the ionic and electron conductivities of all ceramic insulation materials. A marked decrease in the insulation resistance, will without fail, cause electrical shunt currents to flow between the legs of the thermocouple, loading the signal source and causing erroneous thermal voltage signals.

Even more critical are the so called secondary measuring locations. These form when both thermocouple legs, due to a decrease in the insulation resistance, are electrically connected together anywhere within the temperature sensor creating an additional (secondary) measuring location. The output signal of the thermocouple is now a combination of the different thermal voltages which are generated at the various measuring locations. The danger presented by these secondary measuring locations occurs when part of the thermocouple is located in areas where the temperature is higher that at the measuring location itself (steam boiler tubes in large power plants, brick lining at the bottom of industrial ovens).

The electric insulation capability is naturally not only a function of the insulation material used but also of the geometry (diameter and length) of the thermocouple itself. Especially for very long thermocouples, e.g. in large power plants, it is difficult to achieve high insulation resistance. For applications with temperatures over 1000 °C (1832 °F) the use of thermocouples made with mineral insulated cables can only be recommended with very limiting restrictions. For these applications, the use of thermocouples designed using conventional technology (pipe designs) are to be recommended. The insulation values of the ceramic bodies used in this design are an order of magnitude higher than those of the softer ceramic of the mineral insulated materials. This is due primarily to the differing degrees of compression of the materials.

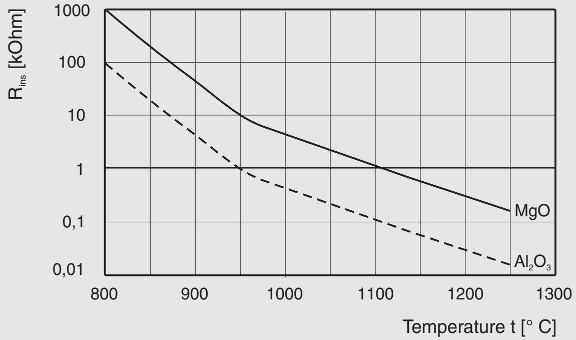

Fig. 3-63: Relationship of the insulation resistance of mineral insulated cables to the operating temperature

3.5.2 Drift Mechanisms for Resistance Thermometers

The effect of impurities on the temperature coefficient of Pt-resistor materials

As already mentioned, the purity of the mandatory alloy compositions is an essential requirement for the thermal materials. The Platinum resistance wire for the manufacture of Platinum measuring resistors is no exception.

A rough differentiation can be made between application categories:

- For the manufacture of temperature sensors, in order for the requirements in ITS 90 to be satisfied, Platinum with pure quality is required. Temperature sensors of this type are used as definition and interpolation instruments for determining the International Temperature Scale between the fixed points in the temperature range from -189 °C (-308.2 °F) (N_2-Point) to 961 °C (1761.8 °F) (Ag-Point).
- For resistance thermometers, as they are defined in EN 60751, physically pure Platinum is used, which, as a result of the addition of specific elements to the alloy, are “set“ to the required temperature coefficient α.

For its temperature coefficient (which corresponds to the linearized temperature dependence of the material in the temperature range between 0...100 °C (32...212 °F)) the value $3.8506 \times 10^{-3}\ K^{-1}$ can be calculated from the basic values in EN 60751.

Impurities, which may contaminate the Platinum during manufacture or during the operating period of the temperature sensor, can change the chemical composition of the material and thereby its temperature coefficient. The result is a deviation from the basic values in the standard. The Platinum resistance wire will be gradually “poisoned“. The sensor drifts.

A typical problem, which also leads to the poisoning of the Platinum resistance wire, is the absorption of foreign materials from the thermomwell material, or from the sheath materials used for the mineral insulated cables. This absorption process is practically nonexistent or extremely slow at lower temperatures, but it accelerates dramatically at higher temperatures. For this reason, metallic thermomwells made of stainless steel should not be used when long term temperature exposure over approx. 420 °C (788 °F) is anticipated. For long term use above that temperature, thermomwell materials such as quartz glass, high purity ceramic or mineral insulated cables with a Platinum sheath should be used.

A typical indication that the resistance material is aging, which can be attributed to poisoning, is an increase in the R_o-value, accompanied by a decrease in the α-value.

The following table demonstrates the effects of impurities on the α-value for physically pure Platinum.

Element	**dα (ppm^{-1})**
Fe	-1.28×10^{-6}
Ni	-0.16×10^{-6}
Ir	-0.20×10^{-6}
Mn	-0.21×10^{-6}
Rh	-0.09×10^{-6}
Cu	-0.35×10^{-6}
Pd	-0.10×10^{-6}
Ag	-0.15×10^{-6}
Au	-0.07×10^{-6}
Pb	-0.90×10^{-6}
Cr	-3.25×10^{-6}

Tab. 3-25: Effects of contamination on the temperature coefficient (α) of Platinum

Drift effects due to mechanical stresses in the sensor element during operation

Not only changes in the chemical composition of the resistor material due to contamination by foreign elements can cause instability in the temperature sensor, but also the presence of mechanical stresses in the sensor element or in the total assembly can lead to changes of the resistance values. Continuous mechanical vibrations, especially when combined with high operating temperatures, affect the temperature sensor significantly. There are two effects which can be initiated by the stresses described in the following.

In wire wound resistors, which are not solidly positioned in the carrier body for vibration resistant, short circuits between the individual windings can occur causing step change reductions in the R_o-resistance value.

The fine wire in the sensor element can be elongated at the connection point by strong vibration loads causing a reduction in the wire cross section. In an extreme case the fine wire can break off. A comparable effect can occur if the resistance thermometer is exposed to continuous large temperature changes and a temperature change resistant design was not used. In such applications, the sensor element, if the fit is too tight, experiences continuous tension and compression forces (alternating stresses) in the connection wires due to the different thermal expansions of the materials.

Changes in the connection lead resistance

In resistance thermometers using a 2-wire configuration, the connection lead resistance is a direct component of the measured value. To correct the measured resistance value to its actual temperature dependent value, the connection lead resistance is usually specified so it can utilized by the user to correct the value measured. The connection lead resistance can be accounted by the manufacturer by using a resistor with smaller resistance value (negative actual value deviation from reference value).

If during the course of operation of the temperature sensor the resistance of the connection leads change (e.g. due to a cross section reduction of the wires, oxidation at the connection locations, etc.), then the deviation of the measured values appear as a drift, which often goes unnoticed. For resistance thermometers connected in 3- and 4-wire configurations this effect is automatically compensated.

Material	R_{20} d = 0.6 mm (0.024”) in Ω/m	R_t/R_o at 400 °C (752 °F)	Measurement error at 400 °C (752 °F) for d = 0.6 mm (0.024”) length = 1 m (39”)	
			uncompensated	compensated
Cu	0.06	2.75	0.48 K	0.3 K
Ag	0.06	2.70	0.47 K	0.29 K
NiCr	2.48	1.086	7.8 K	0.62 K
CuNi	1.77	0.996	5.1 K	0.02 K

Tab. 3-26: Measurement error due to connection lead resistance

Wire material	Outside diameter d in mm (inch)	Number of conductors	R/l in Ω/m
Cu	3 (0.118)	2	0.111
Cu	3 (0.118)	4	0.107
Cu	4.5 (0.177)	4	0.045
Cu	6 (0.236)	2	0.027
Cu	6 (0.236)	4	0.027
Cu	6 (0.236)	6	0.052

Tab. 3-27: Wire resistance of Cu-mineral insulated cables at room temperature

Changes in the insulation resistances

The design of resistance thermometers is essentially comparable to thermocouple designs. Comparable materials are also used. The electric insulation capabilities of the insulation materials can change in the application range of the resistance thermometer for a number of reasons. A change causes parasitic short circuits to be created, which act as resistors in parallel with the actual sensor resistance as shown in the circuit diagram below. Electrically they act as voltage dividers.

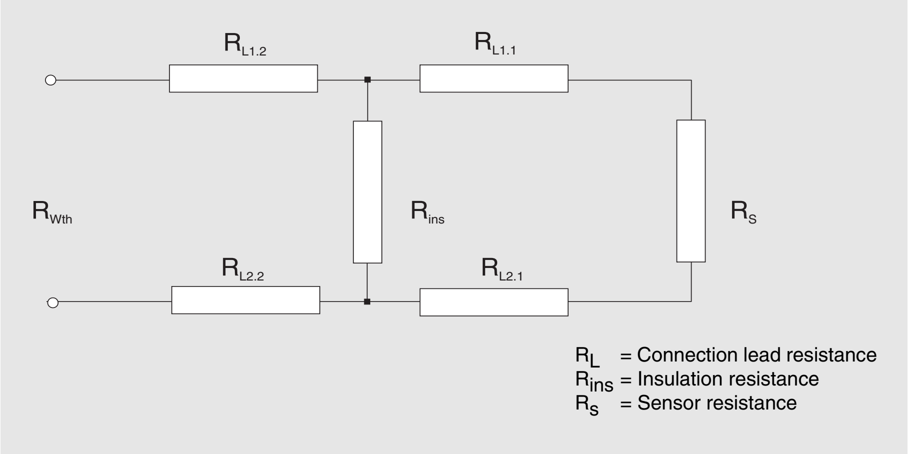

Fig. 3-64: Electrical circuit diagram for a real resistance thermometer

The resultant shunt current causes a lower, incorrect measurement signal. The effect of “poor“ insulation resistance increases for higher nominal resistances of the sensor (e.g. Pt1000 Ω). For resistance thermometers, which are to be used at high temperature, in certain instances it is better to avoid using resistance thermometers with R_o-resistance values of 25 Ω or 10 Ω.

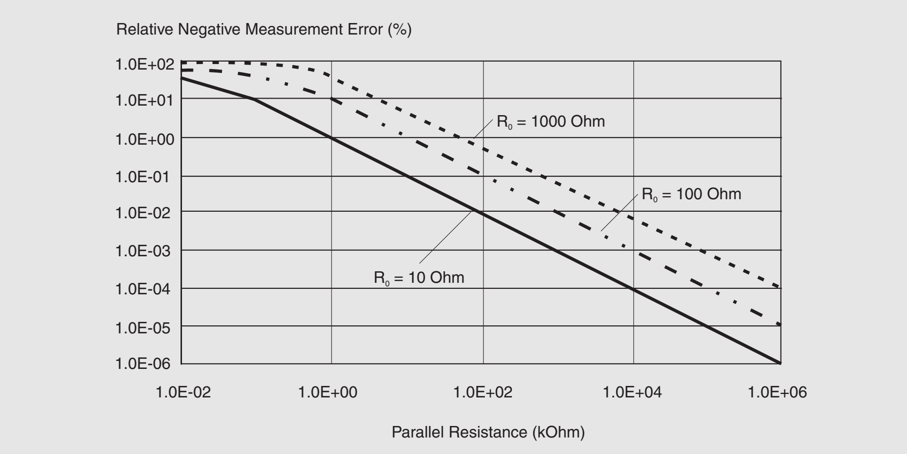

Fig. 3-65: Relative negative measurement error caused by a parallel resistance, due to non-optimal insulation.

At this point it should be stressed, that a regular periodic check of the insulation resistance during the operating life of the resistance thermometer is one of the most important quality assurance measures which can be conducted. Especially since the measurement of R_{ins} requires minimal expense and can be made under actual installation conditions. The requirements according to EN 60751 relative to the insulation resistance limits should, in reality, only be considered as minimal requirements. A decrease in the insulation resistance can also indicate a tear in the insulation, through which not only moisture but also other contaminants could penetrate changing the resistance thermometer curves.

3.6 Possible Errors and Corrective Measures

General

In this Chapter the most common sources of errors and measures for their correction are presented. The list does not claim to be complete. The details relate only to the temperature sensors and their leads. Any instruments connected for processing the signals will only be included if they provide feedback about the operation of the temperature sensor.

Quick checks of the thermocouples (TC) and resistance thermometers (RTD) and their measurement circuits in the installed condition

- Required test instruments:
  Portable multimeter with mV and Ω ranges, insulation tester with 60...100 V = voltage; all measurements are made at room temperature.
- At room temperature the continuity and insulation are tested; use “knocking“ to detect wire breaks.
- A TC, under certain circumstances, can probably be considered to be acceptable if $R < 20\ \Omega$ (wire > 0.5 mm (0.020”) Ø); the value is a function of the wire diameter and length $R_{ins} \geq 100\ M\Omega$ (for an insulated TC).
- A RTD is also probably acceptable if $R \approx 110\ \Omega$ (for Pt100) $R_{ins} \geq 100\ M\Omega$.

Heating a TC or RTD, e.g., with a gas flame to approx. 200...400 °C (392...752 °F) (without a controlled temperature) will provide information regarding breaks, reversed polarity (for a TC), too low insulation resistance, etc.

Testing in the installed condition

- **Additional** instruments required:
  mV-source, resistance decade or a commercially available Pt100-simulator
- TC: Disconnect connection leads; use the mV-source to inject voltages into the measuring circuit and check indication. Test determines whether the TC or the connected measuring circuit is in error.
- RTD: Disconnect connection leads at thermometer; connect the resistance decade and simulate the measurement resistance and check indication. Test determines whether the RTD or the connected measuring circuit is in error.
- Additional tests were described in the previous section.

If the TC or RTD has a exchangeable measuring inset, replace the inset with a test measuring inset with known values. Test determines whether the temperatures sensor or another component in the measuring circuit is the cause of the measurement error.

Error Table for Thermocouples and Resistance Thermometers

Error	Probable or possible causes	Corrective measures
Measured signal disturbances (no stable indication)	a) Electrical/magnetic interference	– Install galvanically isolated transmitter – Maintain a distance of least 0.5m (20”) between signal and power leads when installed in parallel – Use electrostatic shielding by installing a grounded foil/screen – Use twist lead (pairs) to eliminate magnetic coupling – Cross signal and interfering power leads in right angel
	b) Ground loops	– Only one ground point in measuring circuit or measuring system “floating“ (not grounded)
	c) Decrease of the insulation resistance	– Exchange measuring inset – Dry thermometer/measuring inset, suspect moisture absorption; remove and reseal (only possible by manufacturer)
Temperature sensor responds too slowly (response time), Indication in error	a) Incorrect installation – in flow shadow – affected by an interfering heat source	– Select installation site so the medium can transfer its temperature undisturbed to the temperature sensor and eliminate the influence of an interfering heat source
	b) Incorrect installation – insertion length too short – poor heat coupling – too high heat loss e.g. through extension tube	– Insertion length of thermal element should be at least + 5 x d (liquids) up to 20 x d (gases) (d = thermowell outside diameter) – Assure good heat contact, especially for surface measurements, by using appropriate contact surfaces and/or heat conductive materials (e.g. heat conductive paste, grind surface) – Reduce effect by suitable insulation
	c) Thermowell too thick	– Use the smallest technically capable thermowell; response time is proportional to the first power of the cross section or volume of the temperatur sensor, dependent on the heat transfer coefficient and air gaps in the assembly. Fill the latter with contact materials (oil, grease if possible)
	d) Deposits on the thermowell (it has a thermally insulating effect)	– During inspection, remove – If possible, select a different thermowell, or another installation location

Continuation: **Error Table for Thermocouples and Resistance Thermometers**		
Error	Probable or possible cause	Corrective measures
Break in the temperature sensor	a) Vibrations	– Stronger springs for measuring inset – Shorten insertion length – Move measuring location (if possible) – Specially designed measuring inset and thermowell
	b) Thermal shock	– Select a temperature change resistant sensor design
Very corroded, abraded or eroded thermowell	– Incorrect thermowell material selected	– Analyze defective thermowell and select a more suitable material; provide supplementary surface protection (e.g. armoring or eccentrically drilled thermowell, impact rod)

Error Table Specifically for Thermocouples		
Error	Probable or possible cause	Corrective measures
Temperature indication too low with a very thin thermocouple	– Instrument with a low input or internal resistance, high lead resistance	– Adjust leads – Select an instrument with a higher input resistance
Varying temperature indication with otherwise proper operation	– Reference junction temperature or electric simulation not constant (thermal/electrical reference junction)	– Reference junction temperature or reference junction simulation must be maintained constant
Temperature indication error increases with increasing temperatures (indication too low)	– Decreasing insulation resistance (acts as a shunt path, decreases EMF of the thermocouple)	– Recommended insulation resistance – at 20 °C (68 °F) ≥ 100 MΩ, – at 500 °C (930 °F) ≥ 2 MΩ – Exchange thermocouple measuring inset, then seal against moisture
Large deviations of the temperature indication from the values in the tables	– Parasitic voltages (thermal voltages, galvanic voltages) – Incorrect material combinations – Incorrect linearization applied – Poor electrical contact	– Check thermocouple and leads, exchange if necessary
Large deviations of the temperature indication from the values in the tables	– Incorrect compensating cables or their polarity is reversed	– Check if the **correct** compensating cable has the **correct** polarity – If a compensating cable is used: Temperature of connection terminals max. 200 °C [392 °F). Same temperature of connection terminals at > 100 °C [212 °F]
Indication changes over the course of time	– Chemical effects on the thermocouple especially at higher temperatures	– Exchange defective thermometer, possibly by a suitable thermocouple (e.g. Green rot in Type K → replace with Type N) – The measuring location wanders with the “healthy“ material into cooler regions, possibly insert thermocouple deeper, install air purge (O_2-addition)
	– Thermal aging of the thermocouple	– Select larger wire size in order to slow down the aging process – Generally an aged thermocouple indicates lower temperatures than a new one. – Check critical measuring locations regularly – Regular recalibrations

Continuation: **Error Table Specifically for Thermocouples**

Error	Probable or possible cause	Corrective measures
Indicating instrument shows room temperature (reference junction in instrument)	– Lead break	– Check continuity
Negative temperature indication	– Incorrect polarity at thermocouple	– Reverse thermocouple polarity
Indication in error by 20...25 °C (68...77 °F)	– Thermocouple Type L linearized as Type J or reverse	– Correct linearization
Indication even though temperature sensor disconnected	– Pick up on the compensation cable due to electromagnetic noise – Parasitic galvanic voltage (adjacent meter location) due to moisture in the compensation cable	– Dry compensation cable

Error Table Specifically for Resistance Thermometers		
Error	Probable or possible cause	Corrective measures
Temperature indication generally too high	– Non-negligible lead resistances too high, Not compensated	If still possible: – Install larger wire size cables – Compensate leads – Use sensor head transmitters – Convert to 3- or 4-wire circuits – Reduce connection lead lengths
	– Self heating by measuring current too high	– Use a smaller measuring current (recommended 1 mA)
Temperature indication changes with changing ambient temperatures	– Thermometer in 2-wire circuit; the connection leads are subjected to large a temperature change	– Convert to 3-wire circuit, which essentially eliminates the ambient temperature effects – Convert to a 4-wire circuit (Connection lead resistance effects completely eliminated)
Temperature indication error increases with increasing temperature (indication too low)	– Decreasing insulation resistance, acts as a shunt path for the measured signal	– R_{ins} approx. 0.1 MΩ in parallel with 100 Ω gives an error of the same magnitude as Tolerance Class B Recommended: R_{ins} at 20 °C (68 °F): ≥ 100 MΩ R_{ins} at 500 °C (930 °F): ≥ 2 MΩ (Minimum requirements per EN 60751) – Exchange defective thermometer
Deviations of the temperature indication from the values in the tables (parasitic and galvanic EMF's)	– Poor lead material, contamination, moisture – Temperature difference between the terminals of the connection leads – Corrosion at the connection terminals in the connection head	– Check installation – Thermally insulate terminals (same temperature)
Indication changes over the course of time	– Thermal aging (Drift of the measuring resistor)	– Select suitable high temperature design – Recalibrate regularly – Exchange if necessary

4 Non-Contacting Temperature Measurements in Field Usage

4.1 Advantages and Uses for Applying Infrared Measuring Technology

Complementing the classical, contacting temperature measurements using thermocouples and resistance thermometers, more and more applications are making temperature measurements using non-contacting infrared-thermometers.

The infrared measuring technology is not a new discovery – it has been utilized in industry and research for decades – but only recently have innovations reduced the costs, increased the reliability and appreciably reduced the size of the sensor. All these factors have aroused the interest of new user groups and application areas.

Advantages of the non-contacting temperature measurement

- Fast measuring method in the ms-range (saves time) or increases in the number of consecutive measurements which can be made in a given time interval, higher information rate (e.g. temperature field distribution measurements).
- Measurements on moving objects possible (conveyer processes, rolling mills, etc.).
- Measurements in dangerous or inaccessible locations
  (objects at high voltage, long distance measurements).
- High measuring temperatures above 1300 °C (2372 °F) are not a problem. In such applications, contacting thermometers have a limited life span.
- No reaction on the object, i.e. no energy is removed from the measured object. Especially suitable for poor heat conductors such as plastics and wood, a higher measuring accuracy than with contacting thermometers plus elimination of the false measuring values.
- No mechanical influences on the surface. Therefore wear free, e.g. painted surfaces are not marred and measurements are possible on soft surfaces (foams, elastomers). Contaminations, especially in hygienic applications, are excluded.

Having mentioned a number of advantages, the question remains, what must be considered when applying infrared-thermometers:

- The object must by optically visible to the infrared-thermometer. Large amounts of dust or smoke affect the measurement as well as solid obstructions, e.g. measurements cannot be made inside closed metal reaction vessels.
- The optics in the measuring head must be protected from dust and condensing liquids.
- Only surface temperature measurements can be made, while the different radiation properties of different material surfaces must be considered.

Summary: The main advantages are fast response, no reaction on the measured object and a very large temperature range up to 3000 °C (5432 °F).

4.2 Fundamentals and Operation

An infrared-thermometer can be compared to the human eye. The lens of the eye is the optic, through which the radiation from the object reaches the light sensitive layer, the retina. There the signal is converted and conducted to the brain. In an infrared thermometer, the lens is responsible for the thermal radiation from the object reaching the radiation sensitive sensor, where the radiation is converted into a useful electrical voltage.

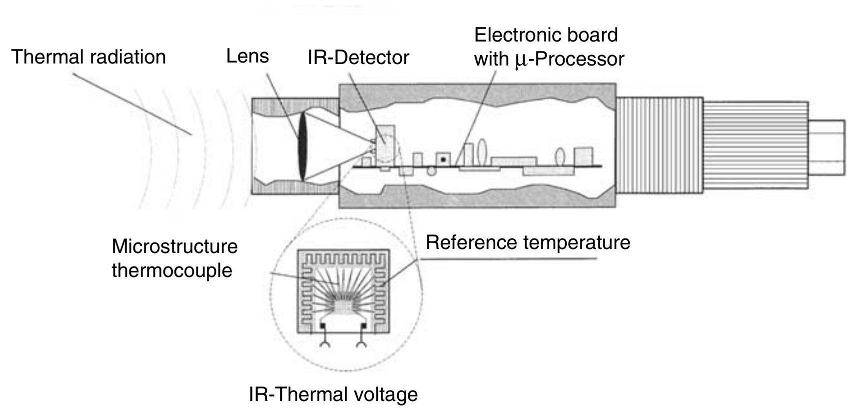

Fig. 4-1: Design principle of an infrared measuring (IR) system

4.2.1 Physics of Thermal Radiations

Every body with a temperature (T) above absolute zero, emits, as a function of its temperature, infra red radiation, so called self radiation. It is the result of internal molecular movements. The intensity of these movements is a function of the temperature of the body. Since the molecular movement simultaneously produces charge motions, an electromagnetic radiation (Photon particles) is emitted. These Photons move at the speed of light and behave according to the known Laws of Optics. They can be deflected and focused using lenses or reflected using mirrored surfaces. The spectrum of this thermal radiation extends from 0.7 to approx.1000 µm wavelengths. This range is not visible to the human eye, because it is above the red range of visible light. It is know by the Latin, “infra"-red.

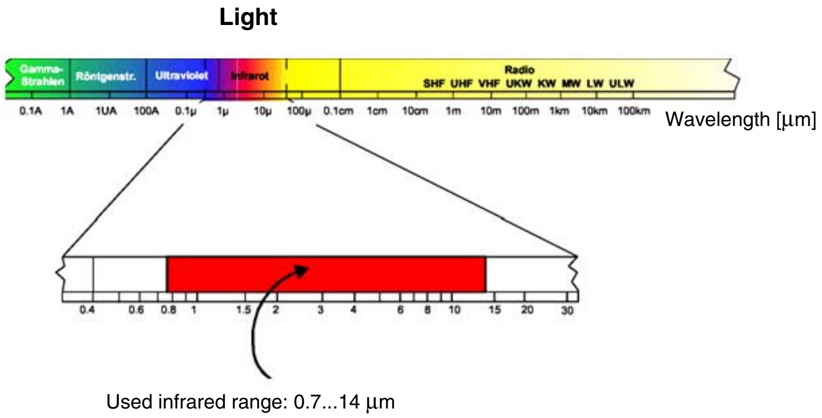

Fig. 4-2: The electromagnetic spectrum, with the usable infrared range

As mentioned previously, all bodies emit this radiation. In Fig. 4-3 typical radiation curves for a body at various temperatures are shown. One can see, that hot bodies not only emit radiation in the above described infrared range (> 0.7 µm), but a portion of the spectrum lies in the visible range. This is the reason why people can see very hot objects (over 600 °C (1112 °F)) as red hot to white hot. Experienced steel workers can estimate fairly well the temperature of the hot metal by its color.

The classic Disappearing Filament Pyrometer has been used in the steel and iron industry since 1930 as a functional measuring system. In Fig. 4-3 one can also see, that the point of maximum radiation shifts to shorter wavelengths as the temperature of the object increases and that the curves for a body at various temperatures do not cross each other.

These relationships were recognized by the physicists Stefan and Boltzmann in 1879 and indicated that a unique temperature determination of the measured object can be made based on its radiation curve.

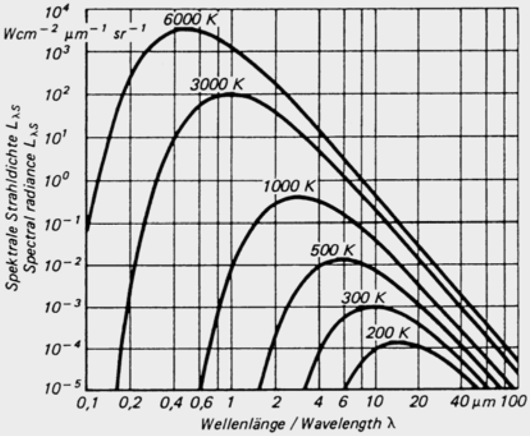

Fig. 4-3: Blackbody radiation curve as a function of the temperature

Infrared measuring technology is based on this knowledge. As can be seen in Fig. 4-3, the goal is to design an infrared thermometer so that as much of the energy as possible (corresponds to the area under the curve) or the signal from an object can be used for the evaluations. At higher temperatures this is possible using a narrow wavelength range, at lower ranges the energy of a larger spectrum ranges (e.g. 7...14 µm) is used.

An additional reason for using instruments with different wavelength ranges, is due to the radiation characteristics of some materials, e.g., those with so called non-graybody radiation (glass, metals and plastic foils). Fig. 4-3 shows curves for ideal blackbody radiation. Many bodies emit less radiation at the same temperature. The relationship of the real radiation value to blackbody radiation is known as the emissivity e, which has a maximum value of 1 (body corresponds to an ideal blackbody) and a minimum value of 0. Bodies, whose emissivity value is less than 1, are called graybody radiators. Bodies whose emissivity value is also a function of the temperature and wavelength, are called non-graybody radiators.

Viewed physically, the Conservation of Energy law applies, and therefore the sum of the radiation made up of the absorption (A), reflection (R) and transmission (T) equals "one" (see Equation 1 and Fig. 4-4).

$$A + R + T = 1 \tag{1}$$

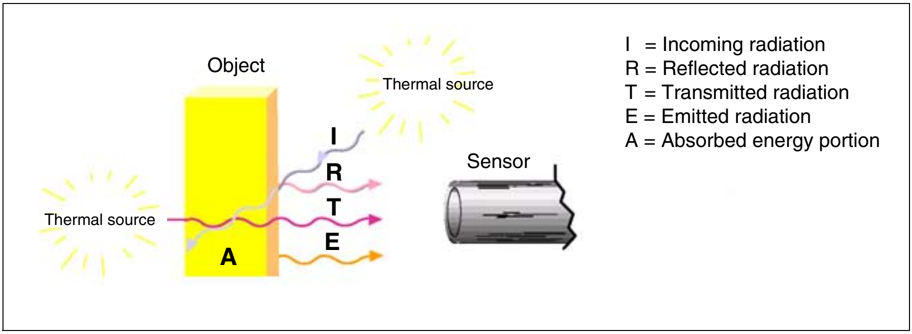

Fig. 4-4: Real graybody radiator

Solid bodies do not have any transmission in the infrared range (T = 0). Therefore Equation 1 becomes for the absorption and also for the emission:

$$A \Leftrightarrow E = 1 - R \tag{2}$$

Ideal blackbody radiators have no reflection (R = 0), so that E = 1. Many non-metallic bodies, e.g. wood, plastic, rubber, organic materials, stone or concrete surfaces only reflect minimally and therefore have high emissivity values between ε 0.8 and ε 0.95. Metals on the other hand, especially polished and shiny surfaces, have emissivity values of approx. ε 0.1. These conditions are taken into account by the infrared thermometers by their ability set a selected emissivity factor, see also Fig. 4-5.

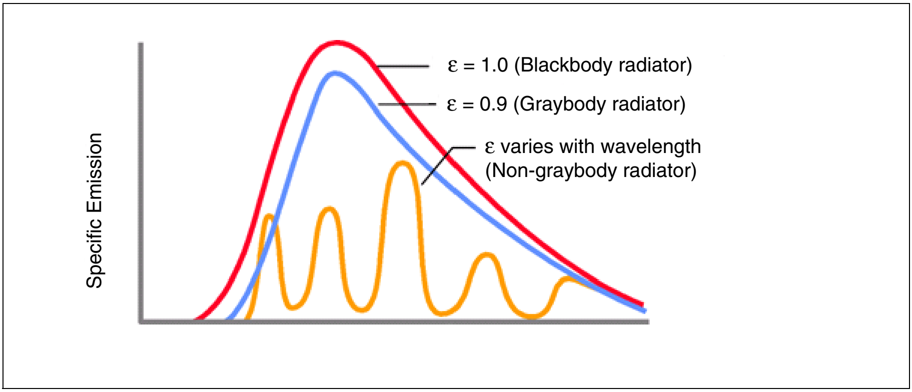

Fig. 4-5: Specific emissions for various emissivity values

4.2.2 Determining the Emissivity Values

Whether an object is a solid body, a liquid or a gas, it is individual and specific for an infrared sensor. The reasons are its specific material and surface conditions. There are a variety of methods which can be used to determine their effects on the emissivity value. The emissivity value can be determined from a table listing the emissivity values for commonly used materials. Emissivity value tables are also a help in selecting the correct instrument by listing the appropriate wavelength ranges. The table values, especially for metals, should only be used for orientation, because the surface condition (e.g. polished, oxidized or scaled) can affect the emissivity value more than the type of metal itself. There are also methods for determining the emissivity value for a special material. A pyrometer with an emissivity value setting can be used.

1. A sample of the material is heated to a known temperature, which can be measured very accurately using a contacting thermometer (e. g. thermocouple). The temperature of the object is then measured with an infrared thermometer. The emissivity value is then changed until the temperature value corresponds to the temperature measured using the contacting thermometer. This emissivity value can then be used for all subsequent measurements of objects made from the same material.

2. For relatively low temperatures (up to 260 °C (500 °F)) special plastic labels with an adhesive backing and with a known emissivity values are attached to the object to be measured and the temperature of the label measured using an infrared thermometer set to an emissivity value $\varepsilon = 0.95$. The surface of the object is then measured without the label and the emissivity value changed until the correct temperature value is indicated. The emissivity value determined in this manner can then be used for all subsequent measurements of objects made from the same material.

3. A blackbody radiator is manufactured using a test body made of the material to be measured. A hole is drilled into the object. The depth of the hole should be at least 5 times diameter of the hole. The diameter must correspond to the diameter of the target area of the instrument being used. If the emissivity value of the inside walls is greater than 0.5, then the emissivity value of the cavity radiator is approx. 1 and the temperature measured in the hole is the correct temperature for the measured object. If the infrared thermometer is now pointed at the surface of the object, the emissivity value can be changed until the temperature indication agrees with the value previously determined using the blackbody radiator. The emissivity value determined in this manner can then be used for all subsequent measurements of objects made from the same material.

4. If the measured object can be coated, a matte black color is applied, for which an emissivity value of about 0.95 is specified. The temperature of this blackbody radiator is measured, and then subsequently the emissivity value is adjusted as described above for measurements made on the uncoated object.

4.2.3 Measuring Temperatures of Metals

The emissivity value of metals is a function of the wavelength and the temperature. Since metals often reflect, they have a tendency to have lower emissivity values, which could result in variable and unreliable measurements. In such applications, select an instrument which measures the infrared radiation at a specific wavelength and over a specific temperature range, at which the metal has the highest emissivity value, if possible. For many metals the measurement error increases with the wavelength, so the shortest possible wavelength for the measurement should be used, see Fig. 4-6.

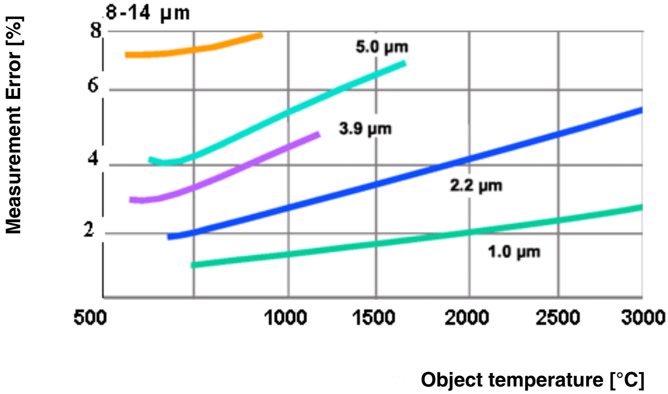

Fig. 4-6: Measurement error for an emissivity value misadjusted by 10 % as a function of the wavelength and object temperature

The optimal wavelengths for measuring high temperatures of metals is between approx. **0.8...1.0 µm** at the limit of the visible range. Wavelengths of **1.6, 2.2 and 3.9 µm** might also be used.

4.2.4 Measuring Temperatures of Plastics

Many plastics are by nature clear and transparent to human eyes, as well as to infrared radiation. The transmission ranges for plastic foils varies with the wavelength and is proportional to the thickness. The transmission is higher in thin materials than in thicker materials. For optimal temperature measurements of such foils, it is important to select a wavelength at which the transmission value is near zero. Certain plastics (Polyethylene, Polypropylene, Nylon and Polystyrene) are opaque at 3.43 µm, others (Polyester, Polyurethane, FEP and Polyamide) at 7.9 µm. For thicker (> 0.4 mm (0.016“)) or heavily pigmented foils, wavelengths between 8 and 14 µm should be selected.

If uncertainty still exists, it is advisable to submit a sample of the plastic to the manufacturer of the infrared-thermometer to determine the optimal spectral bandwidth. The reflection value for practically all plastics is between 5 % and 10 % (ε = 0.9...0.95).

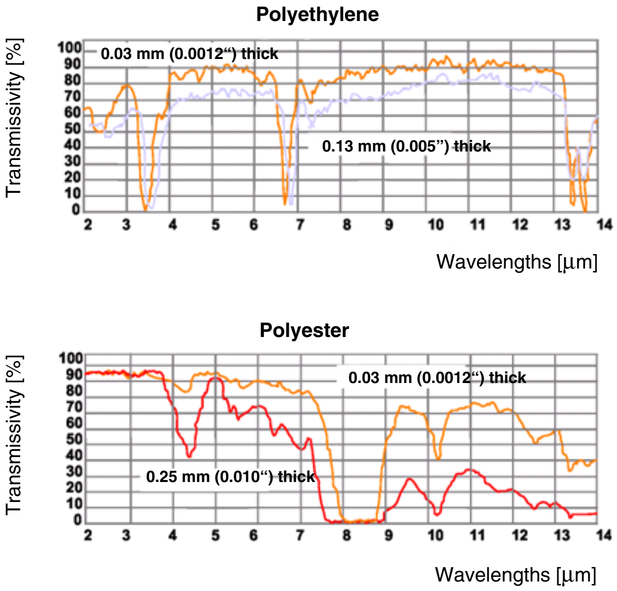

Fig. 4-7: Spectral transmissivity of Polyethylene and Polyester plastic foils

Independent of the thickness, Polyethylene is essentially opaque at a wavelength of 3.43 µm and Polyester is completely opaque at a wavelength of 7.9 µm.

4.2.5 Measuring Temperatures of Glass

When an infrared thermometer is used to measure the temperature of glass, both the reflection and transmission must be considered. By a careful selection of the wavelengths, it is possible, to not only measure the surface temperature of glass, but also temperatures within the glass. For temperature measurements below the surface, a sensor for wavelengths 1.0, 2.2 or 3.9 µm should be used. For surface temperature measurements a sensor with a wavelength of 5 µm is recommended. For low temperatures, 8...14 µm should be used with the emissivity set to 0.85.

Summary:
All bodies emit infrared radiation, which is only visible to human eyes above 600 °C (1112 °F) (e. g. glowing iron). The wavelength range extends from 0.7 µm to 1000 µm. Blackbody radiators absorb or emit 100 % of the radiation that corresponds to their temperature. The radiation of all other bodies is ratioed to the blackbody. This ratio is called the emissivity value.

4.3 A Typical Infrared Measuring Site

4.3.1 The Measuring Path

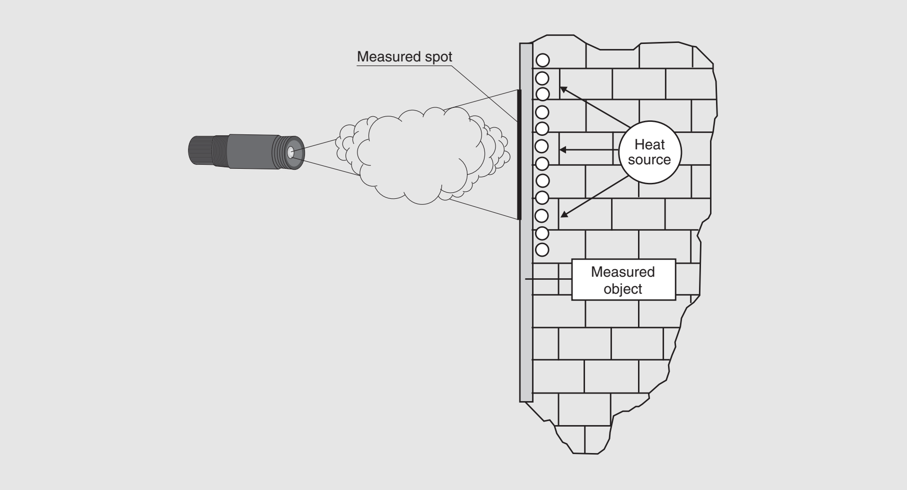

Fig. 4-8: Typical infrared measuring site

Normally, atmospheric air fills the measuring path between the detector and measured object, whose transmission characteristics must be considered if a reliable measurement is to be assured. Atmospheric components such as water vapor or carbon dioxide absorb infrared radiation of certain wavelengths resulting in transmission losses. If these absorption components are ignored, the temperature which will be indicated, in certain instances, will be lower that the actual temperature of the object. Fortunately there are “windows“ in the infrared spectrum which do not contain these absorption wavelengths. In Fig. 4-9 the transmission curve of a 1 m long air path is shown. Typical measuring windows in which infrared radiation passes essentially unimpeded are 1.1...1.7 µm, 2...2.5 µm, 3...5 µm and 8...14 µm. For this reason, commercially available infrared thermometers utilize these wavelengths for evaluating the signals.

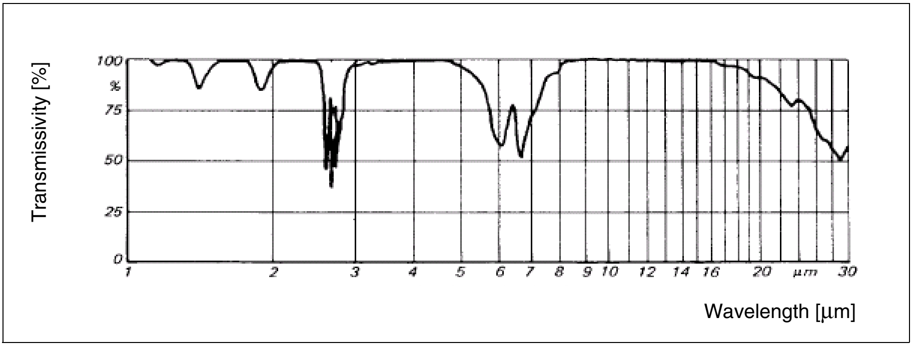

Fig. 4-9: Transmissivity of a 1 m (39") long air path at 32 °C (90 °F) and rel. humidity 75 %

Additional effects such as dust, smoke and suspended matter could contaminate the optics and lead to incorrect measurements. To prevent particles from adhering, an air stream accessory is offered. It usually has threaded adaptors and a compressed air connection. The air stream assures a positive pressure in front of the optics preventing particles from reaching the optics. If during the measuring process, large quantities of dust or smoke are present which are affecting the measurements, quotient pyrometers should be used.

4.3.2 Stray Radiation and High Ambient Temperatures

Also thermal radiation sources in the vicinity of the measured object must be considered. It might be possible that temperature measurements of metal pieces in an industrial furnace might be affected by the higher temperature of the furnace walls. This influence of the ambient temperature on the measured value is taken into account by a special compensation. Otherwise, the temperature value indicated for the measured object would be too high. A correctly set emissivity value in conjunction with an automatic ambient temperature compensation assure an accurate temperature measurement.

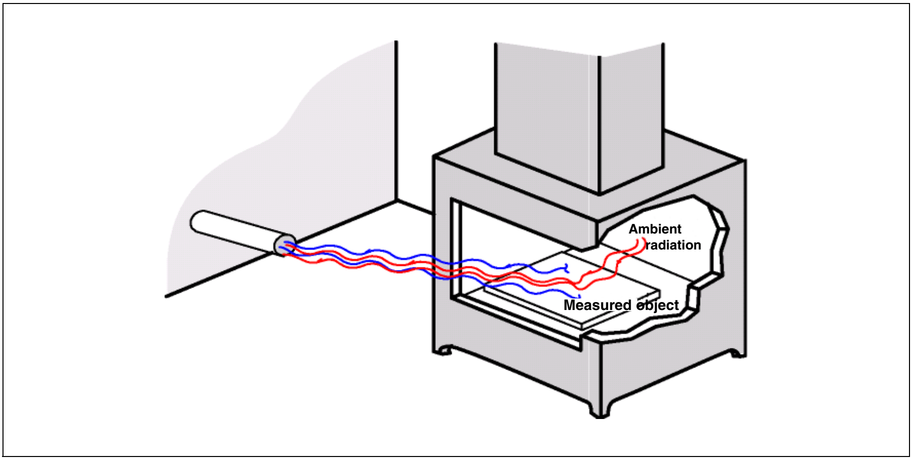

Fig. 4-10: Ambient radiation source effects on the measured temperature

Infrared sensors are electronic components with a somewhat sensitive nature. They can only operate within specific **operating temperature ranges**. For some sensors the upper limit is 85 °C (185 °F). Above the allowable operating temperature air or water cooling must be used and a special cable suitable for high temperature applications must be provided. When using water cooling, it is often desirable to also install the air stream accessory to prevent condensation on the optics.

4.3.3 Optic Radiation Input, Protection Glass and Window Materials

The optic system of an infrared thermometer catches the infrared radiation energy emitted by a circular measured point area and focuses it on the detector.

Care must be exercised to assure that the measured point area is completed filled. Otherwise the infrared-thermometer will also “see“ thermal radiation from the background, causing a measurement error.

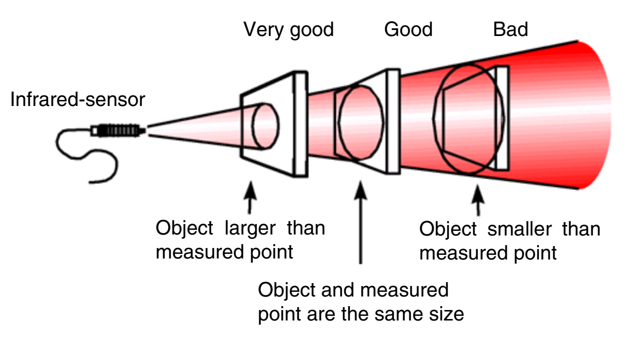

Fig. 4-11: Measured point size effects

Optical resolution is defined as the ratio of the distance between the measuring instrument and the measured object to the measured point diameter. The larger this value the better the instrument and the smaller the measuring object can be for a specific distance.

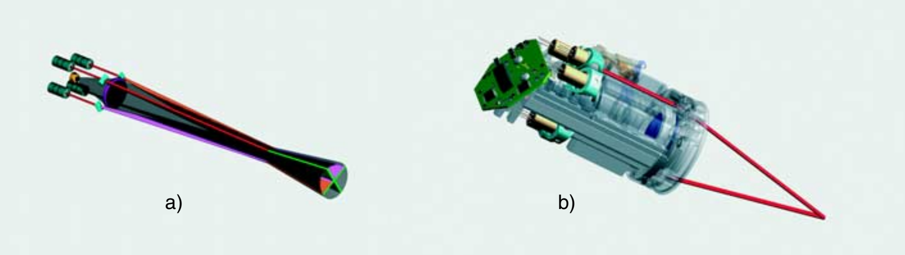

Fig. 4-12: a) High performance optics combined with crosslaser sighting for more precision
b) Close focus lens with a spot size of 1 mm and laser sighting for measurement of smallest structures

The optics can either be a mirror optic or a lens optic. Lenses, dependent on their material, can only be used for certain wavelength ranges, but because of design considerations, are the preferred solution.

Latest Trends in Sighting Techniques

New principles of measurement and sighting techniques facilitate an improved and precise use of infrared thermometers. Developments field of solid state lasers are adapted for multiple laser arrangements to mark the spot sizes. Thus, the real spot sizes inside the object field are denoted with the help of laser crosshairs techniques. Different products use video camera chips instead of optical sighting systems.

Development of High-Performance Optics combined with Laser Crosshairs Techniques

Simple, cost-effective portable infrared thermometers use single point laser aimers in order to distinguish the centre of the spot with a parallax default. With that technique the user has to estimate the spot size with the help of the spot size diagram and the likewise estimated measuring distance. If the measuring object takes only a part of the measuring spot, temperature rises are only displayed as average value of hot area and ambient cold area. A higher resistance of an electric connection due to a corroded contact results in an unduly heating. Due to small objects and inappropriate big spot sizes, this rise will be shown as a minor heating, only: Thus, potentially dangerous heatings may not be recognized in time. In order to display spots in their real size, optical sighting systems with a size marking were developed.

They allow an exact targeting. As laser pyrometers are significantly easier and safer than contact thermometers, engineers have tried to mark the spot size with laser sighting techniques independently from the distance – according to the distance-spot-size-ratio in the diagram. Two warped laser beams approximately show the narrowing of the measuring beam and its broadening in longer distances. The diameter of the spot size is indicated by two spots on the outer circumference. Due to the design the angle position of these laser points on the circuit alternates which makes an aiming difficult.

The Principle of the Crosshairs

New laser sighting techniques support to denote measuring spots of infrared thermometers as real-size crosshairs, exactly matching the measuring spot in their dimension. Four laser diodes are arranged in symmetrical order around the infrared optical measuring channel. They are connected to line generators, which create a line of defined length inside the focus distance. The line generators, arranged in pairs, face each other. They overlap the projected laser lines at the focus. That way crosshairs are generated, which exactly display the diameter of the measuring spot. At longer or shorter distances the overlapping is only partly. Thus the user has a changed line length and with this changed measuring crosshairs. With the help of this technology the precise dimensions of a measuring spot can be denoted for the first time. This development improves the practical use of products with good optical performance.

Protection Glass and Window Materials

For measurements in closed reaction vessels, furnaces or vacuum chambers, it is usually necessary to measure through an appropriate measuring window. When selecting a window material make certain that the transmission value of the window is compatible with the spectral sensitivity of the sensor. At higher temperatures, quartz glass is usually the material of choice. At lower temperatures in the 8...14 µm band the use of special infrared transparent materials such as Germanium, Amtir glass or Zinc selenite are required.

In addition to the spectral sensitivity, other parameters should be considered when selecting the window material, such as the diameter of the window, temperature requirements, maximum pressure differential across window, ambient conditions as well as the capability of maintaining both sides clean. Just as important a factor is the transparency in the visual range in order to better aim the instrument at the measured object (e. g. in a vacuum chamber).

Window Material/ Properties	Sapphire Al_2O_3	Quartz glass SiO_2	CaF_2	BaF_2	AMTIR	ZnS	ZnSe	KRS5
Recommended infrared wavelength range in µm	1...4	1...2.5	2...8	2...8	3...14	2...14	2...14	1...14
Max. window temperature in °C (°F)	1800 (3272)	900 (1652)	600 (1112)	500 (932)	300 (572)	250 (482)	250 (482)	no specs.
Transmission in visible range	yes	yes	yes	yes	no	yes	yes	yes
Resistance to moisture, acids, ammonia compounds.	very good	very good	good	somewhat	good	good	good	good
Suitable for vacuum applications	yes	yes	yes	yes	·/·	yes	yes	yes

Tbl. 4-1: Overview of various window materials

The transmission of a window is primarily a function of its thickness. For a window with a 25 mm (1”) diameter, the thickness required to withstand a pressure difference of one atmosphere is 1.7 mm (0.070”).

Summary:
As in a camera, the rating of the optics (e. g. telephoto lens), defines the size of an object which can be resolved, or measured. The distance relationship (measuring distance: target area diameter) defines the rating of the optics in an infrared thermometer. The target area for accurate measurements must be completely filled by the measured object. If protection windows are installed between the measuring instrument and the measured object, the proper selection of a window material is important. The effects of wavelength range and installation conditions play an important role.

4.4 Indication and Interfaces

For the user, the type of indications and available interfaces are important. For some, especially portable instruments, directly available indicators/operating panel combinations can be considered as the primary outputs for the measuring instrument. Analog or digital outputs can be used for additional indicators in the control room or for control functions. A direct connection to data recorders, printers or computers is also possible.

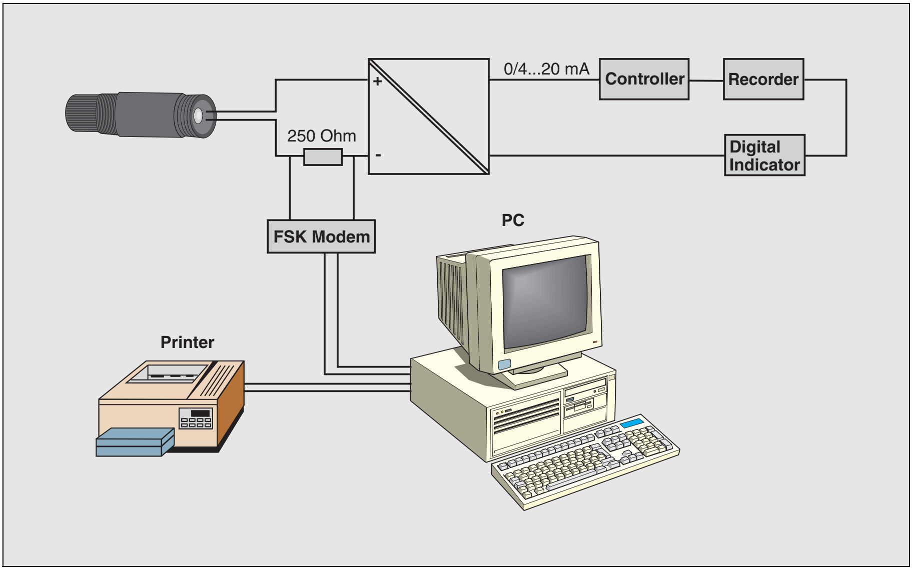

Fig. 4-13: Connection example for an infrared measuring system

Industrial bus systems are gaining importance by providing the user with more flexibility. Sensors can be set from the control room without the need to interrupt the manufacturing process. It is also possible to change parameters, when different products are manufactured on the same production line. Without the ability to make these remote sensor parameter adjustments, e.g., emissivity value, measuring range or alarm limits, the changes would have to be made manually at each sensor itself.

Since sensors are often installed in inaccessible locations, the intelligent sensor assures continuous process monitoring and control with minimal personnel expenditures. If a fault occurs – too high an ambient temperature, cable break, failure of a component – an error message is displayed automatically.

4.5 Application Examples

In the beginning, only high temperatures above the 700 °C (1300 °F) range encountered in glass and metal production were measured. In recent years however, additional application areas, especially in the lower temperature ranges, have opened up.

- **Metal and alloy production**
  (melting, casting, rolling, hardening, forging, annealing, welding, drawing, sintering)
- **Cement and lime furnaces, rotary furnaces**
- **Fire chamber measurements in power plants and waste incineration furnaces**
- **Glass industry** (glass crucibles, feeders, float glass line)
- **Food and beverage industry**
  (freezing, baking, frying, sterilizing, filling, packaging)
- **Textile industry** (drying, fibers)
- **Paper industry** (coating, drying)
- **Plastics** (casting, forming, granulating)
- **Automotive industry**
- **Maintenance and service**
- **Chemical industry**

5 Measurement Signal Processing and Evaluation

5.1 Application of Transmitters in Temperature Measurements

The function of the transmitter is to amplify the electrical signals from the sensor, to correct and if necessary, galvanically isolate them. The conditioned signal can then be easily transmitted over long distances to the in-/output sections of a process control system or controller. The temperature values differentiate themselves in an essential manner from all other measurement values. Since the electrical signal from the temperature sensors or resistors is relative large, signal amplification in close proximity to the sensors is not required. As a result, three basically different mounting locations for the transmitter have evolved:

The **Rail Mounted** is the oldest known mounting arrangement for the transmitter. The most common designs include the 19" or DIN rail mount designs as well as integration directly at the in-/output connections of regulators, valves or controllers. Transmitters for direct **Field Mounting** are mounted in their own rugged housings. The field mounted transmitter can also be used in difficult industrial environments without the requirement for special protective measures and can be mounted in the close proximity to the sensor. In **Head Mounting** the transmitter is integrally mounted in the connection head of the temperature sensor. Transmitters which are used for this mounting design are designated as sensor head transmitters.

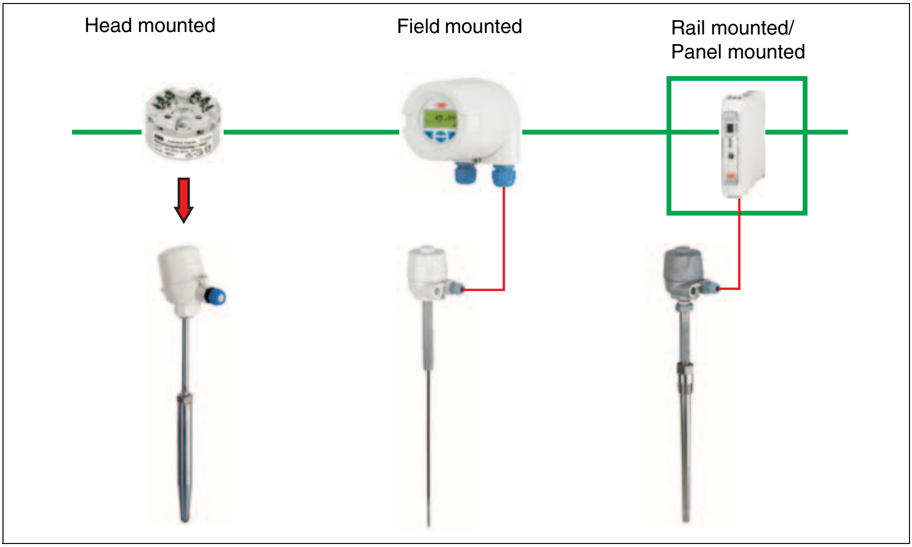

Fig. 5-1: The three transmitter mounting designs

A temperature sensor is considered to be a complete measuring assembly and consists of the thermowell and an exchangeable measuring inset. Dependent on the selected mounting method for the transmitter, the temperature sensor includes either terminals or an adapter for direct mounting of the sensor head transmitter. The advantage of mounting the transmitter in a control room is easier accessibility should a repair be required. This advantage is becoming less important as the electronic designs are becoming more and more reliable.

The trend in modern instrument technology is to install the transmitters near the sensor. The sensitive connection wires are shorter, i.e., the closer the transmitter is to the measuring location, the less the danger that noise pickup could interfere with the temperature signal. Short distances between the temperature sensor and transmitter for thermocouples also reduce the required wiring for the compensation cables (see chapter 5.2). These are definite advantages which are realized when using a head or field mounted temperature transmitter. On the other hand, when the transmitter is installed in the vicinity of the sensor, it may require an internal construction suitable higher requirements and have a more rugged transmitter design due to the harsh ambient conditions which may exist in an industrial environment.

Fig. 5-2: Transmitter in a field mount housing with local indication and operating module plus a large terminal section

The decision whether a transmitter should be field or head mounted depends on the local conditions of the system. Transmitters for field mounting, e. g. model TTF300, have the advantages of a very rugged design and are service friendly. Since the installation location is usually not at an inaccessible measuring location, all start-up and service tasks are easier to perform. A large terminal section and the integration of the operating module underscore these advantages. The required sturdy design of the transmitter is assured by a number of special measures. First, the electronics assembly is completely potted, and secondly, it is mounted in an integrated chamber separated from the terminal section. The electronics is protected even when the cover is removed. Transmitters for sensor head mounting, e.g. Model TTH300, are integrated directly in the head of the temperature sensor. The electronics in this design is also completely potted and also allows the use of a local indicator. The transmitter, when mounted integrally in the sensor head, does not require the installation of a separate transmitter housing, appreciably reducing planning and installation expenditures.

5.2 Measurements of Thermal Voltages and Resistances

The thermal voltage resulting from the Seebeck-Effect is utilized in a thermocouple as the measuring principle (see chapter 2.2.3). Measuring the temperature from the thermal voltage is actually a difference measurement between the hot end of the thermocouple and the reference junction temperature. For correct measurements, the electrical connection to the reference junction must always be made of the same material as the thermocouple leg or suitable compensation cables must be used. Copper can be used for the remaining wiring. Because $U_M = U1 - (U2+U3)$ an exact determination of the measurement voltage U1 can only be made if the reference junction voltage $U_V = (U2+U3)$ is known. To measure absolute temperatures, the temperature at the reference junction T_R must always be known.

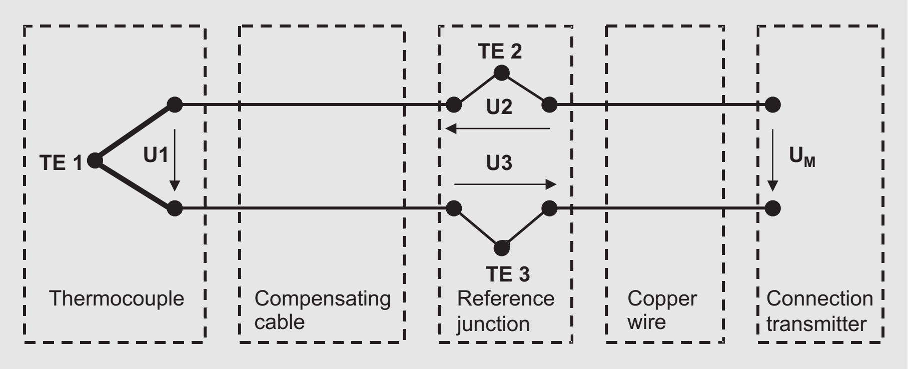

Fig. 5-3: Thermal voltage measurement

When using an **external reference junction** the connection from the thermocouple or from the compensation cable to the copper wires, is located outside of the temperature transmitter. The temperature of the reference junction T_R is controlled at a constant value e.g. by an integrated heater. This value is added to temperature value derived from the voltage U_M, to determine the temperature at the hot end of the thermocouple.

Modern temperature transmitters incorporate an **internal reference junction**, which greatly simplifies the measuring system for the user. The thermocouple leg or the compensation cables are wired directly to the transmitter. The reference junction is formed by the terminals of the transmitter. Its temperature T_R is measured by an integrated temperature sensor and utilized by the transmitter for the internal corrections. The transmitter, in this manner, can determine the temperature of the hot end of the thermocouple directly.

Resistance Measurements

The measurement principle utilized in a resistance thermometer is the temperature dependence of the resistance of Platinum (see chapter 2.2.4). The resistance is measured by applying a constant current and measuring the voltage drop across the resistor. Ohm's Law defines the proportionality between the resistance and the voltage. Therefore the voltage is a direct measure for the resistance and thereby the temperature. Three different circuit configurations are used.

In a **two-wire circuit** a current is applied to the temperature dependent resistor R_T from a constant current source. The voltage drop across R_T is measured by the temperature transmitter and converted. The resultant value, however, is incorrect because of the series resistances of the connection leads ($R_{L1} + R_{L2}$) and the contact resistances at the terminals ($R_{K1} + R_{K2}$).

The two-wire circuit, even for sensor head mounted transmitters is only of limited applicability. Connection lead lengths and terminal connections can be designed with low resistances, and utilizing statistical correction factors the measured values can be compensated in the transmitter. The temperature dependent portion of the resistance of the connection leads must always be taken into consideration. Especially for thin wires and long measuring sensors or connection leads, errors with a magnitude of a number of degrees can result.
Conclusion: The two-wire circuit is not suitable for exact temperature measurements.

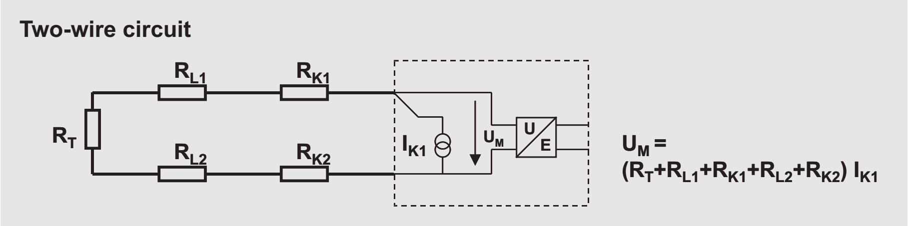

Fig. 5-4: Circuit diagram of a two-wire circuit

In a **three-wire circuit** two constant current sources are used, in order to compensate for the disadvantages described above for the two-wire circuits. Similar to the two-wire circuit the current source I_{K2} is used to measure the temperature dependent resistance R_T including the connection lead and terminal contact resistances. The additional current source I_{K1} together with a third connection lead is used to separately compensate the connection lead and terminal contact resistances. Assuming the exact same connection lead and terminal contact resistances for all three connection leads, the effect on the accuracy of the temperature measurements can be eliminated.

Practice has shown that this assumption is not always correct. It is not always possible to assure that the terminal contact resistances are always identical. Oxidation itself, during the course of operation, can cause the contact resistance of the individual terminals to vary by differing degrees. This can cause a non-negligible error, even in a three-wire circuit.

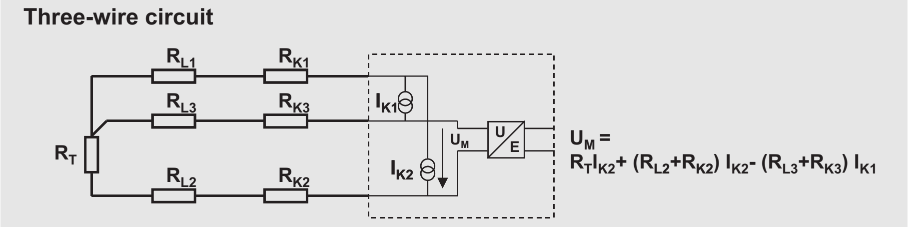

Fig. 5-5: Circuit diagram of a three-wire circuit

The **four-wire circuit** eliminates all the previously described disadvantages. In this configuration a constant current source is used to apply a current to the temperature dependent resistance R_T. The voltage drop across resistance R_T used for the temperature measurement is measured by two high resistance connection leads. In this way the voltage drop due to current flowing during the measurement is negligible and the connection lead and terminal contact resistances R_{L1}, R_{K1}, R_{L2}, R_{K2} do not impact the measurement result. The four-wire circuit is therefore always used when highly accurate temperature measurements are required.

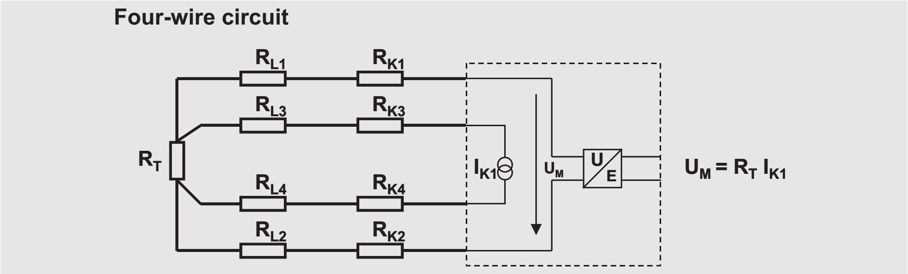

Fig. 5-6: Circuit diagram of a four-wire circuit

Modern transmitters support the measurement of thermal voltages and resistances using the above described circuit configurations in a single instrument. The user can select the optimal measurement configuration for his application. For thermal voltage measurements in industrial applications, the straight forward option using an internal reference junction is used almost exclusively. Use of an external reference junction makes sense when a highly precise reference junction temperature of less than 0.1 K is required. In view of the errors which could result from using the sum of a temperature measuring chain (see chapter 5.10), this approach is reserved for laboratory applications. For resistance measurements, the four-wire circuit should basically be used because of its indisputable advantages. The three-wire circuit, with its disadvantages, should only come into play for resistance measurements when the use of electrical wiring configurations or system conditions are restrictive.

5.3 Power Supply of Temperature Transmitters

The transmitter is a measuring instrument, which converts an analog input signal into an analog and/or digital output signal.

Transmitters contain active electronic components and therefore require power supply to fulfill their functions. The number of connection wires for the power supply and output signals defines the power supply technology for the transmitter. This is designated as 2-/3-/4-wire power supply technology and should not by confused with the resistance measurement configurations described in chapter 5.2 as 2-/3-/4-wire circuits.

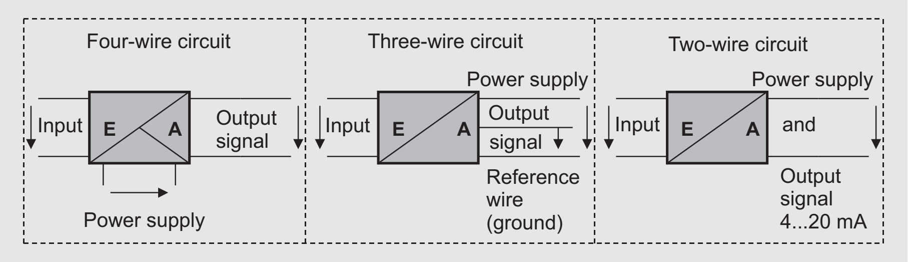

Fig. 5-7: Power supply technology for transmitters

The **Four-Wire** technology is used exclusively in control cabinets. The typical power supply values available are 230 V AC, 110 V AC, 24 V AC or 24 V DC. For the power supply and output signals, four wires are required. The input circuit, output circuit and power supply for the transmitter are electrically isolated from each other. Typical output signals are 0...5 V, 0...10 V, 0...20 mA and 4...20 mA. Additional digital outputs are often included in transmitters with four- or three-wire power supply, that can be used for error or alarm signals.

The **Three-Wire** technology is also used exclusively in control cabinets. The use of the same reference wire for all the instruments eliminates the need for a fourth connection wire. The typical power supply for this option is 24 V DC. Because a connection wire was eliminated, only the in- and outputs are electrically isolated from each other. Typical output signals are 0...5 V, 0...10 V, 0...20 mA and 4...20 mA.

The **Two-Wire** technology is the standard today for field or sensor head mounted transmitters. In this design the same connection wires are used for the power supply and the output signal, which reduces the wiring expenses in comparison to three-wire technology. Because power supply is required for the operation of the transmitter even when there is no output signal, the lowest output signal value cannot be zero (true zero), but must have a value greater than zero (live zero). For this reason, the standard output current range is 4...20 mA. The live zero signal also allows the connection wires to be easily monitored (see „Error Monitoring“ on page 181). The typical power supply for this design is 24 V DC.

5.4 Design Principles for a Temperature Transmitter

The transmitter is a measuring instrument which converts an analog input signal into a scaled, analog or digital output signal. Dependent on the requirements, this signal is then available in the measuring chain for further processing in a controller and/or for indication.

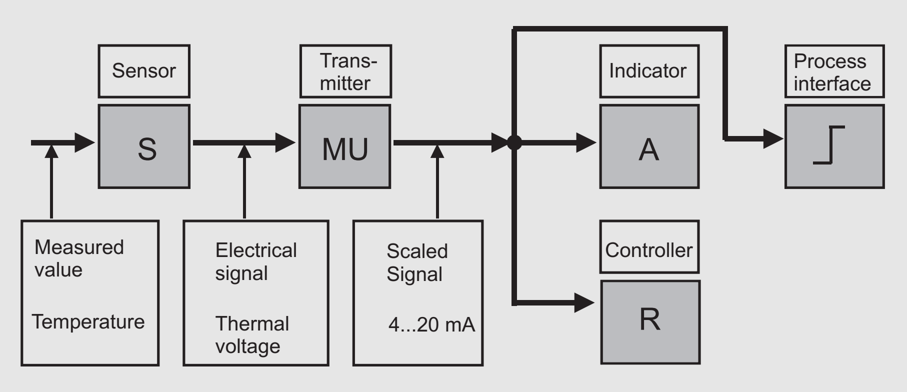

Fig. 5-8: The components in an industrial temperature measuring chain

Temperature transmitters operate based on the current measuring process (Lindeck-Rohte, better stated as a current cross coupled amplifier) which outputs a load independent current of 4...20 mA DC. The curves for the resistance thermometers or thermocouples are not linear. An additional function of the transmitter is to linearize the input signal in order to output a temperature proportional signal. Additional requirements for a temperature transmitter include selectable measuring ranges, sensor failure monitoring, measuring circuit signal contact and the electrical isolation between input, output and power supply.

Temperature Transmitter in Four-Wire Technology

The transmitter shown in the following figure is designed to either measure the mV-signals (thermocouples) or make the resistance measurements (Pt100). It converts the input values into a proportional, load independent DC current signal of 0...20 mA or 4...20 mA or into a voltage signal of 0...10 V. The adaptation to the measured value type is accomplished by a selection made at the temperature transmitter or by using exchangeable measuring range modules.

The temperature transmitter in four-wire technology consist of a switched controller (1), which rectifies and stabilizes the supply power. A electrically isolated voltage (2) is supplied to the in- and output circuits. Additional circuit sections are the amplifier (3), measuring range module (4), electrical isolation (6), output stage (7) and alarm signalling (8).

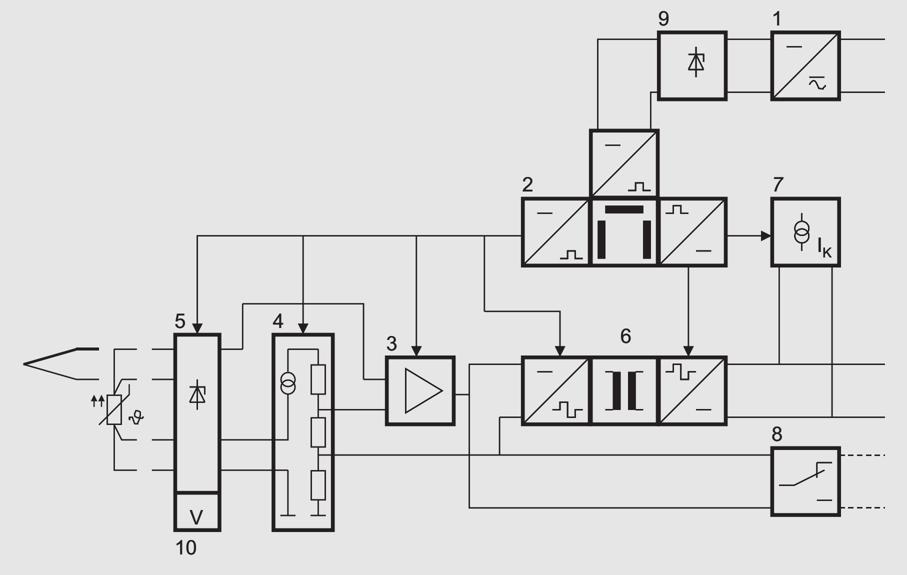

Fig. 5-9: Schematic of a temperature transmitter in four-wire technology

Transmitters in explosion proof designs incorporate a circuit limiter (5) for the Intrinsic Safety of the input circuit, a power supply limiting circuit (9) and electrical isolation (6). A different explosion proof design has intrinsically safe in- and outputs as well as electronic current and voltage limiters in the output current circuit. In this design a electrical isolation between the input and output is not required.

The input signal is fed through the measuring range module (4) to the amplifier (3) whose output is a load independent DC signal. When a electrical isolation (6) circuit is installed, the DC current signal is chopped, decoupled by an isolating repeater and converted back to a load independent DC current in a rectified circuit with a load converter. This signal is unipolar. For conversion to a bipolar current signal or voltage an output stage (7) is required.

The reference junction correction (10) for thermocouples, monitors the temperature at the connection terminals of the temperature transmitter and accounts for its value in the measurements.

The alarm signal transmitter (8) has an adjustable switching point which can be either normally open or normally closed. For a purely analog operating temperature transmitter, this switch point can be set using a potentiometer. For digital temperature transmitters, the switch point, the temperature measuring ranges, the connected sensor and its connection circuit can be set using programming software.

Temperature Transmitter in Two-Wire Technology

In regard to their electrical functions, these transmitters, viewed from both connection terminals, can be considered to be passive, equivalent resistance circuits. The transmitter behaves as a variable resistor whose resistance changes until the current in the measuring circuit corresponds to the measured value. As a basic component, the 4 mA current, provides the power supply for the electronic circuits in the transmitter. The current is a load independent current with a signal range of 16 mA, which contains the measured value information.

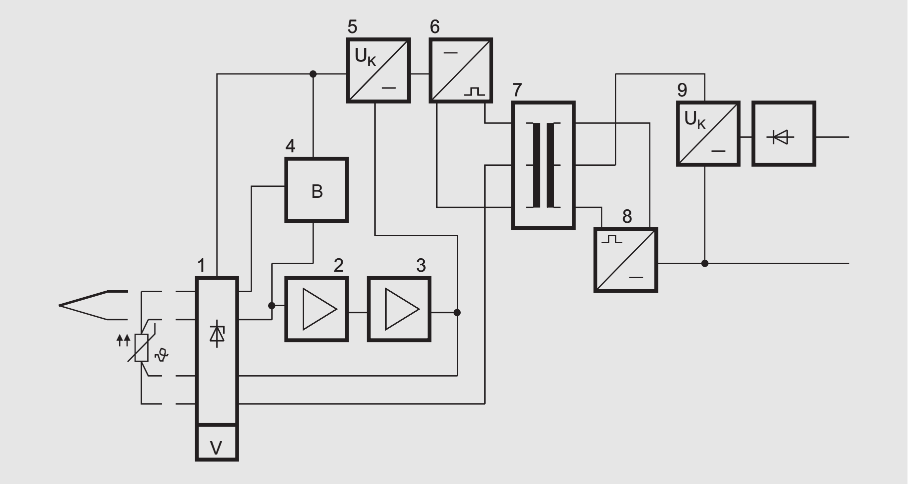

Fig. 5-10: Schematic of a temperature transmitter in two-wire technology

This transmitter is designed for the same input signals as the four-wire transmitter. It converts the input single values into a load independent DC current signal of 4...20 mA. The selection of the measured value type is made at the factory by adjustments made in the temperature transmitter.

Slope and zero values are also set at the factory in the temperature transmitter using precision resistors. The elimination of the potentiometer and the complete encapsulation of the electronics with potting material assure an unexcelled, rugged construction with long term stability. Transmitters for resistance thermometers or for thermocouples are built using this design.

The input signal is fed from the input circuit (1), configured based on the measuring method and measurement range, to the amplifier (2) and converted in a final stage (3) into a load independent DC current. The constant voltage source provides the circuit components with a stabilized voltage.

Error Monitoring

Error monitoring is an important function of the transmitter. Sensor failure, sensor short circuit and reacting when measured values are outside of the range setting must be recognized. These error conditions can also be signalled over the 4...20 mA output. Today the power supply required by the transmitters can be provided by a basic current < 3.5 mA. As a result, transmitters can be designed in which information can be transmitted outside of the 4...20 mA range. In the error monitor circuit (4) the output signal during a short circuit or measuring circuit interruption condition can be selected to be signalled at a current value either above or below the 4...20 mA range.

Measured values outside of the measuring range end values are error conditions, indicating an undesirable status of the process. Sensor failure or sensor short circuit in comparison are error conditions indicating that the sensor should be checked or repaired to rectify this condition. The NAMUR (International User Association of Automation Technology in Process Industries) has published a recommendation defining current ranges, outside of the 4...20 mA measuring range, which provide an adequate separation, for the indication of a measured range error and for a temperature sensor error (Fig. 5-11). This allows the appropriate corrective measures to be initiated quickly.

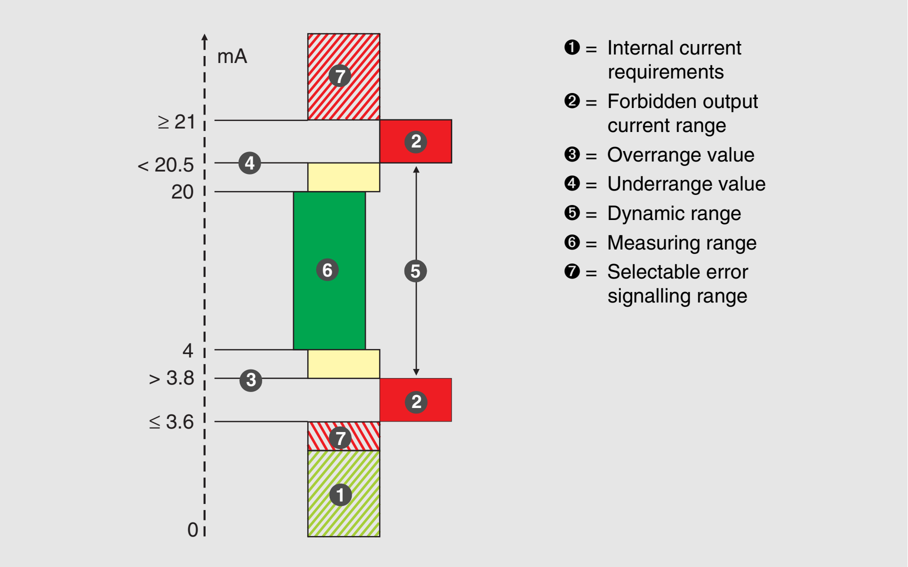

Fig. 5-11: NAMUR limits for error signalling of a transmitter in two-wire technology (NAMUR-Recommendation NE 43)

Basically the range > 21 mA, as well as the range < 3.6 mA can be utilized for error signaling. Ideally, the behavior during an error condition should be selected so that during an error condition the alarm monitors connected to the output signal will not be effected. In addition, in programmable transmitters, different error conditions can often be user assigned. For example, an error condition which can turn a system off can be set if the current value is > 21 mA. Error conditions, which should only trigger and alarm, can be set if the current value < 3.6 mA. It should be noted, that during a power outage or a break in the 4...20 mA loop (not to be confused with a sensor failure) the current value is always 0 mA. A signalling of this error condition must be made using the analog input of the monitor.

Linearization

The curves for thermocouples and resistance thermometers are generally not linear. The linearity error is usually larger than all other errors (hysteresis, amplification, aging etc.). Since the curve shapes are known, the measuring error can be compensated using an inverse function. In practice it has been sufficient to approximate the curve shape using straight segments. How to select the straight segments depends on the particular curve shape. In Fig. 5-12 the curve U_A (T) is approximated first using a straight line and then two straight lines between equidistant temperature intervals and lastly with three straight lines between optimized temperature intervals for which the deviations from the curve are minimized.

For analog transmitters, the method uses an operational amplifier with a defined amplification for each straight section. It is possible using this approach to reduce the total error of the temperature transmitter to approx. 0.1 % of the range.

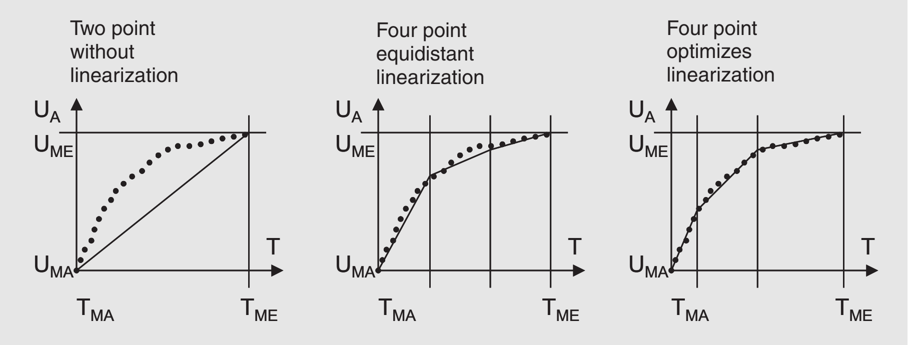

Fig. 5-12: Linearization of a sensor curve using straight line segments

For digital temperature transmitters with a microcontroller, the curve can be linearized using software (Firmware) by calculating an inverse function polynomial directly from the curve of the standard temperature sensor. As a result of this technology, the linearization error for digital transmitters is less than for analog ones.

5.5 Programmable Temperature Transmitters

Analog transmitters are adjusted and set for sensor type and for one measuring range. If a sensor type or measuring range is changed, the transmitter must also be exchanged. A programmable transmitter on the other hand, can be reprogrammed by entering the new parameters for the changed application. When designing a system, it is possible to select transmitters in which the required measuring range can be set at start-up. This simplifies and reduces the planning and design time and reduces replacement part inventory costs. Programmable transmitters also clearly reduce service and maintenance expenditures thus reducing the cost of ownership.

Circuit Block Diagram

The following circuit block diagram shows a typical design for a programmable temperature transmitter. The transmitter contains two microcontrollers. In the primary circuit as well as in the secondary circuit the controller operates using the software (Firmware) designed for that circuit. In the primary circuit the multiplexer is controlled, which transfers the values from the sensors, the reference and the reference junction. The signals reach the analog-digital-converter and are read by the microcontroller. Filter functions and sensor failure monitoring is also carried out by the this controller. The digitized signal is fed by a transducer to the microcontroller in the secondary circuit. The transducer also provides the electrical isolation between the primary and secondary circuits.

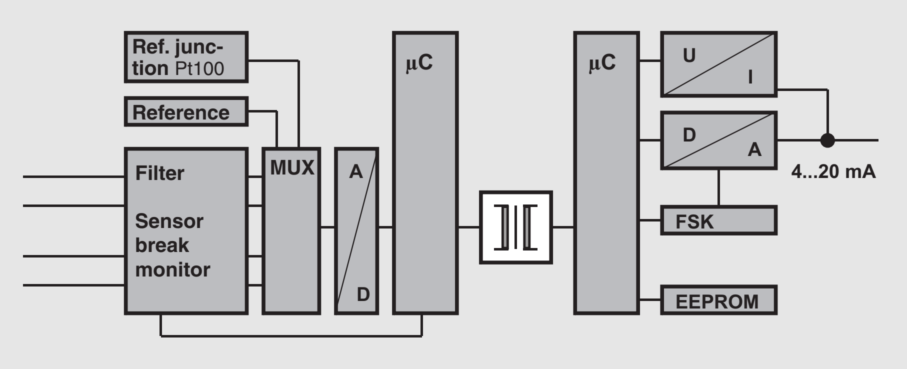

Fig. 5-13: Circuit block diagram of a digital temperature transmitter

The second microcontroller in the secondary circuit controls the digital-analog-converter and is responsible for the data exchange between the communication and the programming software. The required software (Firmware) is stored in an EEPROM. An I/U-converter powers the transmitter from the 4...20 mA signal. This same 4...20 mA signal is used to provide communication with a supervisory system (PC) using a FSK-interface.

As can be recognized in the following figure, two sensors can be connected to the transmitter. The averages and differences between the two sensor signals can be calculated and also transmitted as an output signal.

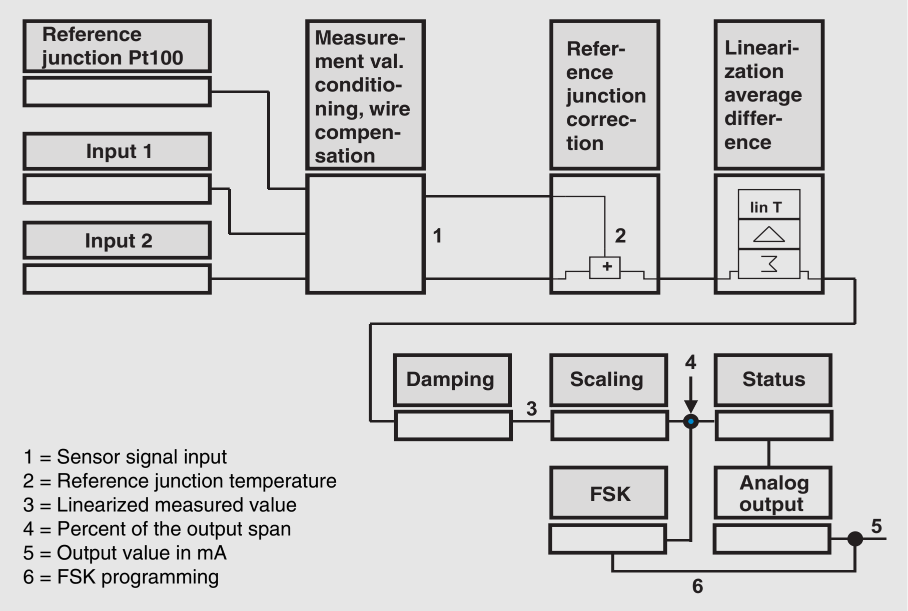

Fig. 5-14: Software structure of a digital temperature transmitter

Programmed Curves

In a programmable transmitter are all the curves for the most common measuring applications stored. They include the basic values for the appropriate measurement resistors and thermocouples, which can simply be selected when programming the transmitter.

A Pt100-resistance thermometer in accuracy class Type B has a temperature dependent measuring error at 400 °C (752 °F) of several K (see Fig. 3-5). For measurements with resistance thermometers the achievable accuracy after selecting the standard curve can never be better than the allowable measuring deviations of the sensor. Programmable transmitters, such as the TTH300, offer the possibility to use the exact curve of a previously measured temperature sensor by entering the coefficients for the Callendar Vandusen equation (polynomial see chapter 3.1.5).

For curves with a monotomic curve shape it is possible to enter a free style curve with using as many as 64 points. In this way a digital transmitter can be matched to any sensor or to the calibration or adjustment of the entire measuring chain. To accomplish this, the sensor to be calibrated, together with the transmitter and its power supply instrument, are calibrated against a “Standard“. The deviations of the output signal are corrected in the transmitter. Deviations from the curve for the entire measuring chain as low as < ± 0.05 K are possible.

Diagnosis

Programmable transmitters include extensive capabilities to detect and signal error conditions. In order to provide the user with an effective trouble shooting strategy, the error types where classified and prioritized by NAMUR based on their cause and importance to operation. A distinction is made between sensor, transmitter, configuration/calibration and measuring range errors. Based on the priority assigned to each error, the transmitter selects and signals the error with the highest priority. Process control systems utilize a classification system for display and diagnosis based on their operating phase, start-up, operation, monitoring or asset management. In this way the user is provided with the most important information at the correct location at the correct time.

Standard
• Sensor error (break or short circuit) • Instrument error • Over/under measuring range • Simulation active
Expanded
• Over/under alarm value • Sensor backup active (Sensor 1 or Sensor 2 failure) • Zero or span adjustment active • Low power supply • High transmitter ambient temperature (> 85 °C (185 °F)) • Memory • Indicator • Writing protection • “Drag indicator“ for sensor temperature and electronics temperature

Tbl. 5-1: Diagnosis and error classifications for transmitter TTH300

Drift Warning and Redundancy Circuit

Recalibration and recertification are normal procedures for measuring locations which are subject to measuring instrument inspections. Two channel transmitters, such as the TTH300, can provide some relief, by increasing the required recalibration interval. To check for drift, a temperature sensor with two integrated measuring locations can be used. In addition to its actual measuring function, the transmitter continuously compares the difference between the two measuring locations. If the deviation exceeds a specified value, an alarm is signalled. Using this signal, the user is advised by the transmitter that a recalibration is required. The number of manual inspections are appreciably reduced, because a recalibration will only be conducted when it is really necessary.

To increase the operational availability, two redundant temperature sensors are installed. For single channel transmitters the connections can be manual switched to the other sensor if one fails. Two independent Pt100 measuring locations can be connected to a two channel transmitter. Using the integrated “hot swap“ function, if a malfunction in one of the measuring locations is recognized by the transmitter, an error is signalled and the input is immediately switched to the redundant element. The on-time of the measuring location is significantly increased, since the repair of the defective element can made during the next, scheduled service shut down. In summary, two channel transmitters appreciably reduce service and maintenance expenditures.

5.6 Communication Interfaces

Programmable transmitters with a classic 4...20 mA signal transmission are available with a digital communication interface. These interfaces are used primarily for diagnosis or for selecting the required transmitter functions for the application while continuing to use the analog output for fast measured value transmission. There are different programmable transmitters interfaces, suitable for local as well as for remote programming. Transmitters with fieldbus interfaces usually no longer include an analog output. The measured signal, diagnosis and parameters are transmitted digitally over the fieldbus.

Local Programming

The transmitters with local communication interfaces (LCI) often have, in addition to the connections for the 4...20 mA signal, a separate, manufacturer specific programming connection. An adapter is used to connect the instrument directly to the programming device. A requirement is that the distance between the instrument and the programming device is only a few meters (yards).

This type of local programming is found primarily in transmitters designed for installation in control rooms and for the economical sensor head transmitters. The programming is usually a one time event, made prior to the start-up of the transmitter, e. g. in the work shop. Continuous monitoring of the transmitter, because it only has a locally accessible interface, is not possible. Changes to the parameters or inspections of the transmitter by service can only be accomplished using portable programming devices.

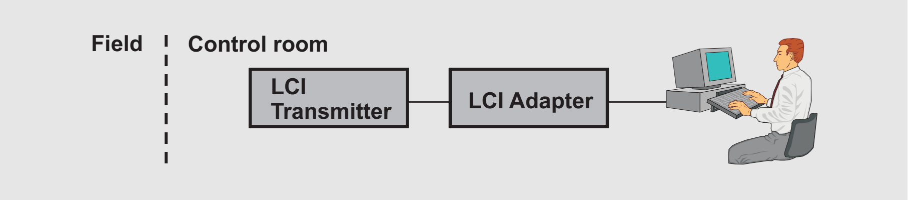

Fig. 5-15: Local Communication Interface

Remote Programming

When the transmitter is to be programmed or monitored from large distances, transmitters with FSK-communication are used (FSK = Frequency Shift Keying). In this design, a frequency of 1200 Hz or 2200 Hz is superimposed on the analog 4...20 mA signal. This type of data transmission is based on the Bell 202 Communication Standard.

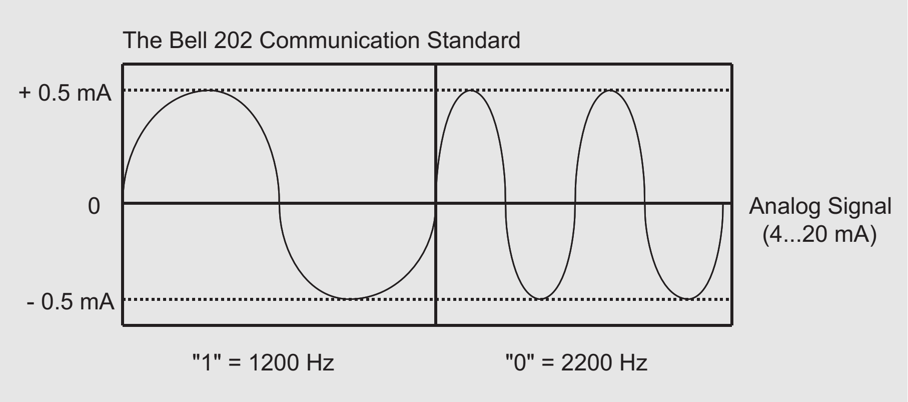

Fig. 5-16: Bell 202 Communication Standard

The two frequencies contain bit information 1 or 0. A real simultaneous communication with a response time of approx. 500 ms per measured value can be achieved. Because the average value of the frequency is zero, the FSK-communication does not affect the analog signal. To program the transmitter a FSK-modem is required.

The HART-Protocol

The HART-Protocol (**H**ighway **A**ddressable **R**emote **T**ransducer, i.e. a protocol for bus addressable field instruments) operates using the above named technology. The HART-Protocol is an industry tested digital communication method available for field instruments. There is a worldwide HART-User Group. All well known companies in the measurement and control fields are members. HART conforms to the Open Systems Interconnection basic reference model (OSI) for open system communications, developed by the International Standards Organization (ISO).

Point-to-point operation is used for simple programming of HART-instruments. When programming, it is always necessary that the connected HART-instrument is powered. There are suitable programming adapters or transmitter power supplies available for this purpose. The following figure shows the various point-to-point operating modes.

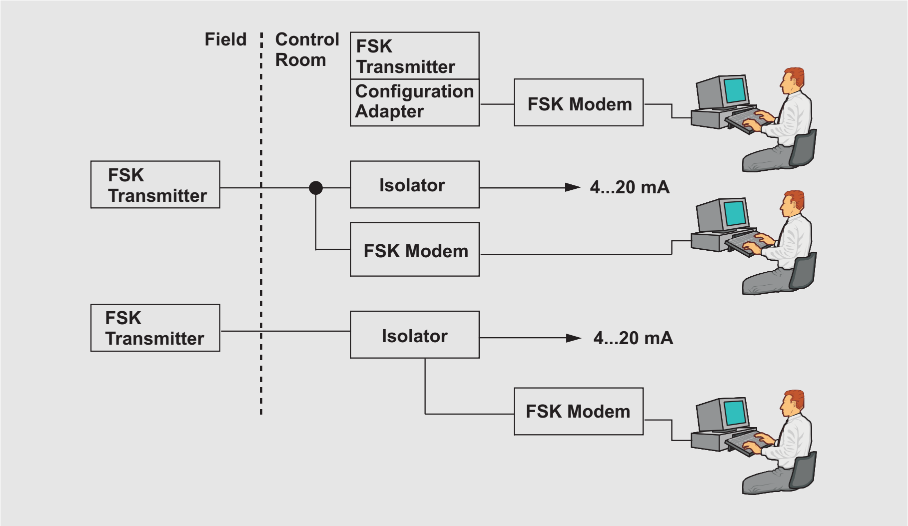

Fig. 5-17: FSK-programming

The manufacturer specific programming adapters accept the HART-temperature transmitter and provide its power supply. The FSK-modem is used to convert the FSK-information into a PC compatible format. Using this design, the transmitter, prior to start-up in the field, can be programmed from the control room without any large wiring expenses. If the temperature transmitter is already installed in the field, it is possible to program it using a handheld terminal (HHT) without any effect on the 4...20 mA output signal. The FSK-modem is integrated in the HHT. The power supply is provided by the transmitter power supply in the control room.

According to the HART-specifications, a load of at least 250 Ω must always be installed in the 4...20 mA loop. This assures that the low internal resistance of the power supply cannot short out the HART-signal. When using older or simple power supply instruments, the connection wire must be opened and a resistor installed. In modern HART transmitter power supply instruments this load is integrated. In addition, they are transparent to the FSK-signals. A simple connection of a handheld terminal or FSK-modem can be made either in the field or in the control room. Many of the transmitter power supplies contain sockets, for connecting terminals or modems so that the current output or supply circuit need not be opened. If power supplies are installed instead, which do not have the ability to transmit FSK-signals, then an FSK-modem must be installed between the transmitter power supply and temperature transmitter. In every HART-interconnection two indicating/operating instruments are allowed. A primary one, usually in the process control system, and a secondary one, e. g. a handheld terminal or a laptop.

HART Multi-Drop-Mode

In the Multi-Drop-Mode the transmitter with a FSK-interface is also bus capable. The two connection wires for the 4...20 mA signal is also used for the bus communication. This operating mode requires only a single pair of wires and a power supply to communicate with up to 15 field instruments. When the connected instruments are configured for this operating mode, their output current is frozen at 4 mA. The instruments only communicate digitally. Their analog output signal is no longer used to transmit temperature values. The connection of a recorder or an analog indicator is no longer possible.

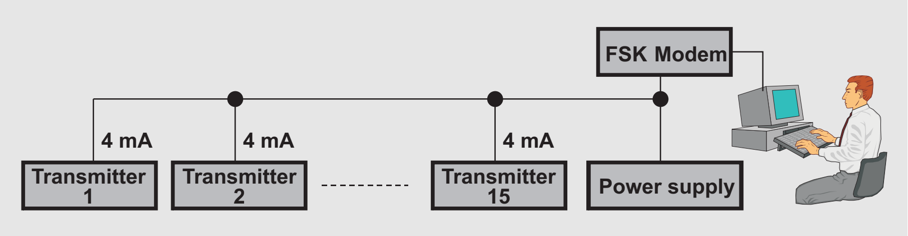

Fig. 5-18: Bus operating mode Multi-Drop

In this operating mode the transmission of parameters and diagnosis data is in the foreground. Since only about 2 measured values can be transmitted digitally over the HART-Protocol per second, this communication method is only used for slower processes, e. g. the monitoring of very distant systems such as pipelines or tank farms.

HART-Multiplexer

It is also possible using a FSK-multiplexer to connect multiple instruments to a single programming instrument. Several hundred HART-field instruments can be accessed from a central location. This simplifies the start-up and maintenance since they can be performed while the system is operational. It is possible to set a HART-transmitter in the simulation-mode, so that the 4...20 mA signal can be set to a fixed, user programmable current value. In this manner, the current loop can be tested without using the measured value. The measuring location parameter values can be stored in the programming instrument. This is a practical function for accessing the diagnosis and asset management data. This allows a quick response when service is required. This functionality can only be viewed as an intermediate step for fieldbus systems with open fieldbus protocols.

Fieldbus Systems

The art of instrumentation was dramatically changed by the introduction of fieldbus technology. In the past, a two conductor wire had to be connected from each instrument to the control room for the analog 4...20 mA signals. In the fieldbus only a single two connection wire cable is required to connect up to 32 temperature transmitters.

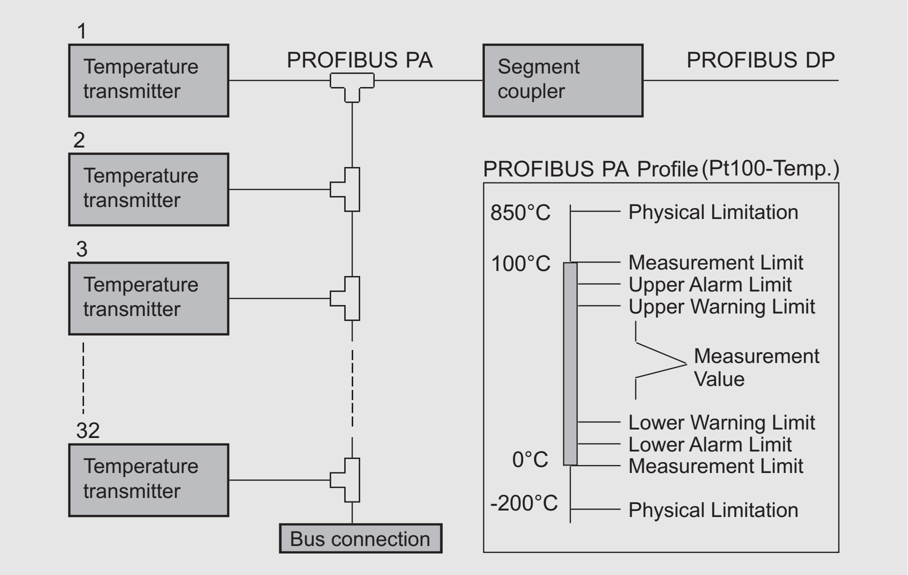

Fig. 5-19: PROFIBUS PA installation using a PROFIBUS PA-profile

This figure shows an example of a PROFIBUS PA installation of 32 temperature transmitters. Since this concerns a fieldbus, it is necessary to install a bus termination at the end of the cable. The transmission medium is a twisted two wire copper cable with a shield. Instruments can be exchanged or added during operation. With a common transfer rate of 31.25 KBaud distances up to 1900 m (6200 ft.) can be spanned.

The temperature transmitters can easily be integrated into PROFIBUS DP-Networks using a segment coupler. The segment couplers have a simple baudrate conversion factor of 1:3. Therefore the transmission speed of the PROFIBUS DP when using these segment couplers is fixed at 93.75 kbit per second (93.75 KBaud). If one wants to circumvent this fixed transmission ratio between the PA and DP, a DP/PA-Link can be used instead of the segment coupler. This allows, dependent on the transmission length of the PROFIBUS DP, the total transmission speed to be realized.

What has been accomplished in the European markets through the activities of the PNO (**P**rofibus-**N**utzer(User)-**O**rganization), is accomplished in the American market place by the FF (**F**ieldbus **F**oundation). Each organization supports a non-compatible bus protocol. Only the bus supplied transmission technology per IEC 1158-2 and the data transmission speed of 31.25 kbit per second are identical for PROFIBUS PA and FOUNDATION Fieldbus.

Fieldbus Profiles

The PROFIBUS PA-Profile enables the exchangeability and interoperability of field instruments from different manufacturers. It is an integral component of PROFIBUS PA and can be obtained from the PROFIBUS-User Organization. The PA-Profile consists of a framework specification, which contains valid definitions for all instrument types, and instrument specification sheets which include the specific agreements which were reached for each instrument type.

The profiles use standardized function blocks. The description of the instrument behavior is accomplished by defining the standard variables, which describe the properties of the transmitter in detail. Every instrument must have a GSD (**G**eneric **S**lave **D**ata) file, which contains the specific instrument data. These files are necessary in order to connect the instrument described therein into the bus. The procedure is supported by the software tools from the different manufacturers. Every instrument must make available the parameters defined in the PROFIBUS PA-Profiles.

Measured values are calculated in a Transducer-Block (TR) and transmitted over an AI-Block to the PROFIBUS-Master. The following table lists the most important parameters of an AI-Block. For actuators, AO-Blocks are used.

Parameter	Read	Write	Function
Out	●		Actual measured value of the process variables
PV_SCALE	●	●	Scaling of the process variables
PV_FTIME	●	●	Rise time of the function block- output in s
ALARM_HYS	●	●	Hysteresis of the alarm function in % or range
HI_HI_LIM	●	●	Upper alarm limit
HI_LIM	●	●	Upper warning limit
LO_LIM	●	●	Lower warning limit
LO_LO_LIM	●	●	Lower alarm limit
HI_HI_ALM	●		Status the upper alarm limit with time stamp
HI_ALM	●		Status the upper warning limit with time stamp
LO_ALM	●		Status the lower warning limit with time stamp
LO_LO_ALM	●		Status the lower warning limit with time stamp

Tbl. 5-2: Defined parameters of an AI-Block in the PROFIBUS PA-profiles

For the various parameters it can be seen that not only the measured value, but also the alarm and warning information is transmitted. The digital transmission of the measured values allows a higher accuracy to be achieved, because the conversion of the measuring range to a span of 4...20 mA is no longer necessary. Wider measuring ranges can be defined, without sacrificing any accuracy.

Programming Software

For the different instruments from the various manufacturers, special programming software is available. A number of firms have developed a common programming software for their entire instrument palette. It can be used, from a common user interface (GMA-Standard), to program the parameters and read the measured values and diagnosis information from different instrument types.

5.7 Temperature Transmitters in Explosion Hazardous Areas

The ability to install transmitters in explosion hazardous areas is an important requirement for their use in chemical, petrochemical and process industries. The design, construction and operation must be in accord with the generally accepted regulations. Equipment, which is installed in explosion hazardous areas classified as Zone 0 or 1, as well as hazardous dust areas classified as Zone 20 or 21, must have been issued a test examination certificate by a registered, certification body. This certificate is issued when the design of the equipment has been examined and found to be in accord with the standards for the applicable ignition type.

The concept of explosion protection includes not only the design of the instrument installed in the explosion hazardous area, but also the consequences of the designs of all the other components in the measuring chain. Fig. 5-20 and Fig. 5-21 show the structure for typical measuring chains for the installation of temperature transmitters in explosion hazardous areas.

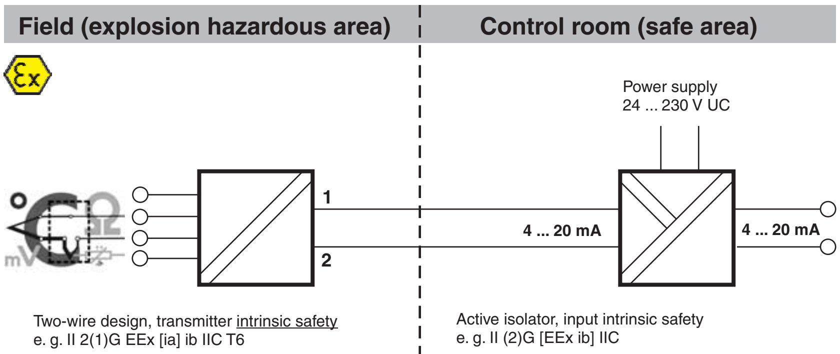

Intrinsically Safe Installation: Ex-temperature transmitter (Two-wire design)
with Ex-input transmitter power supply

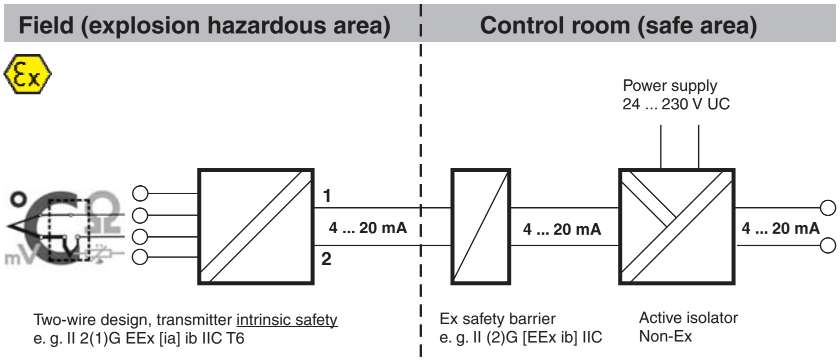

Intrinsically Safe Installation: Ex-temperature transmitter (Two-wire design)
with Ex-safety barriers installed between transmitter and power supply

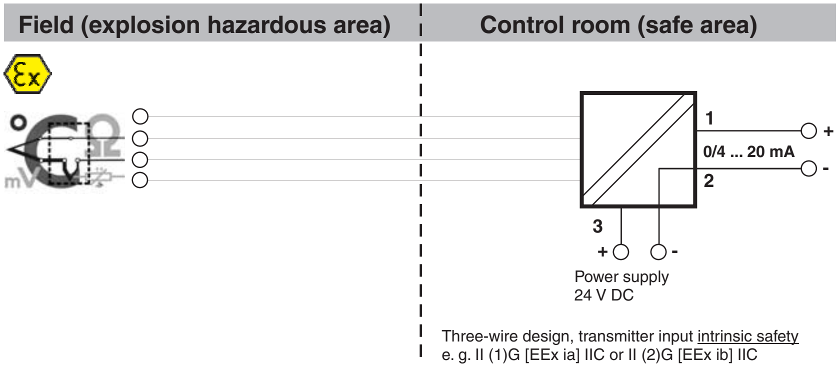

Intrinsically Safe Installation: Ex-Temperature transmitter (Three-wire design)

Fig. 5-20: Installation of temperature transmitters in explosion hazardous areas

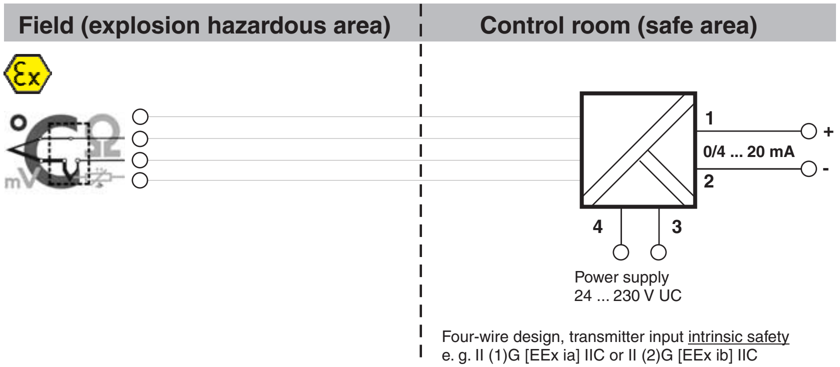

Power supply
24 ... 230 V UC

Four-wire design, transmitter input intrinsic safety
e. g. II (1)G [EEx ia] IIC or II (2)G [EEx ib] IIC

Intrinsically Safe Installation: Ex-temperature transmitter (Four-wire design)

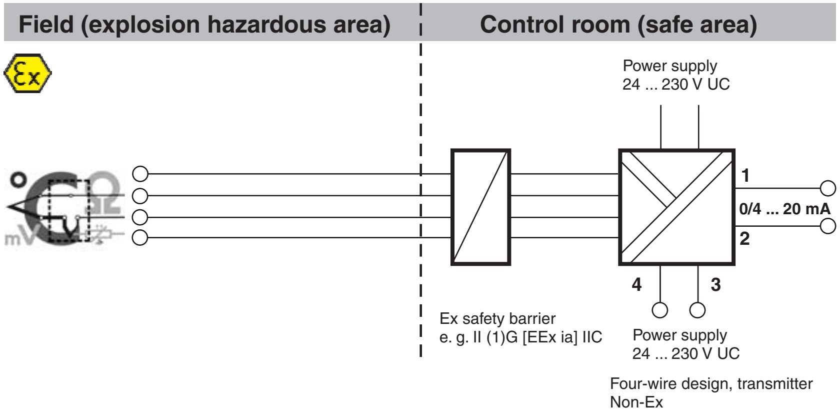

Power supply
24 ... 230 V UC

Ex safety barrier
e. g. II (1)G [EEx ia] IIC

Power supply
24 ... 230 V UC

Four-wire design, transmitter
Non-Ex

Intrinsically Safe Installation: Ex-temperature transmitter (Four-wire design) with Ex-safety barriers installed ahead of the transmitter

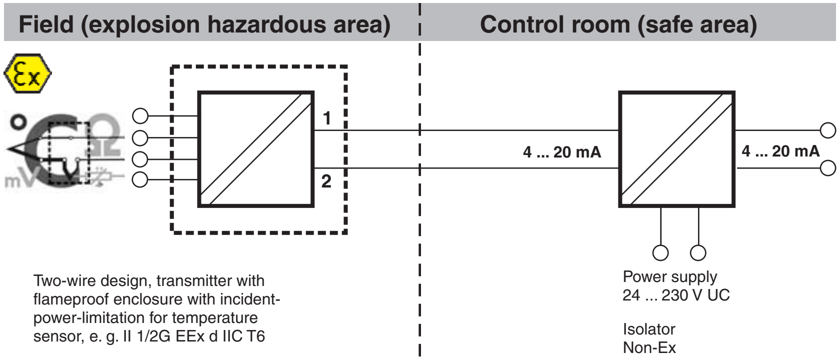

Two-wire design, transmitter with flameproof enclosure with incident-power-limitation for temperature sensor, e. g. II 1/2G EEx d IIC T6

Power supply
24 ... 230 V UC

Isolator
Non-Ex

Flameproof enclosure temperature transmitter (Two-wire design) with transmitter power supply

Fig. 5-21: Installation of temperature transmitters in explosion hazardous areas

If the transmitter is to be installed in an safe area, then all that is required is that an intrinsically safe input circuit be incorporated in the transmitter. If this is not the case, then the required intrinsic safety can be achieved by installing suitable safety barriers, designed specifically for temperature sensors. Transmitters for these applications are often designs using three- or four-wire technology. Since the power supply is integrated, a separate power supply is not required. Transmitters for field or sensor head mounting always use a two-wire design. For the protection type intrinsic safety the power supply is provided either by power supply with integrated electrical isolation or from a network component with barriers installed ahead of it. The function of the power supplies or barriers is to assure that energy limitation required by the intrinsic safety regulations is present. For installations using the flameproof enclosure type of protection, ordinary network components and transmitters without special safety measures can be used, because the explosion protection in this case is provided by the flameproof enclosure in the field.

To use this measuring technology, the user must follow the requirements without any qualifications if possible. For example, if exchanging an instrument in the hazardous area while it is powered is a requirement, then the protection type intrinsic safety has been proven to be advantageous. An intrinsically safe handheld terminal can also be connected to the transmitter in the field while powered in the explosion hazardous area. Therefore, the communication described earlier can also be utilized in such environments without limitations.

Power Supply for Programmable Transmitters

For non-explosion hazardous areas, a two-wire transmitter can be supplied from a normal power supply source with 12...36 V. Often a load with a connection to ground is incorporated across which the signal voltage can be measured. Due to this connection, galvanic coupling could occur between the measuring circuits of two transmitters resulting in erroneous currents. This is especially true when the temperature transmitter does not have electrical isolation between the in- and output circuits. To correct this situation, the use of power supplies is suggested.

A modern power supply has four principle functions:

- Supplying the intrinsically safe measuring circuits while taking into account the required internal resistances for HART-communication
- Decoupling the intrinsically safe field circuits from the non-intrinsically safe control room circuits
- Electrical isolation
- Load conversion

The power supply provides a voltage U_M at the input terminals of the transmitter (1) from its output voltage U_S reduced by the load of lead resistance $R_{L,}$. The input circuit (3) has a supply input and for explosion proof design includes an Ex-Limiter (2). A correctly sized internal resistance is incorporated in the power supply circuit for the HART-communication so the installation of an external 250 Ohm resistor is not required. The next component, a curve module (4) operates per its setting dependent on the application, to provide a proportional or linearized output. In the newer transmitter power supplies this module is not included because the measured signal has already been linearized in the transmitter.

This conditioned signal is fed to the output amplifier (6) through the electrical isolation stage (5). The electrical isolation is transparent to the superimposed HART-Signal. The supply voltage is electrically isolated from the input or supply and output circuits by a switching regulator with rectifier (8), Ex-Limiter (9) and the power supply (10).

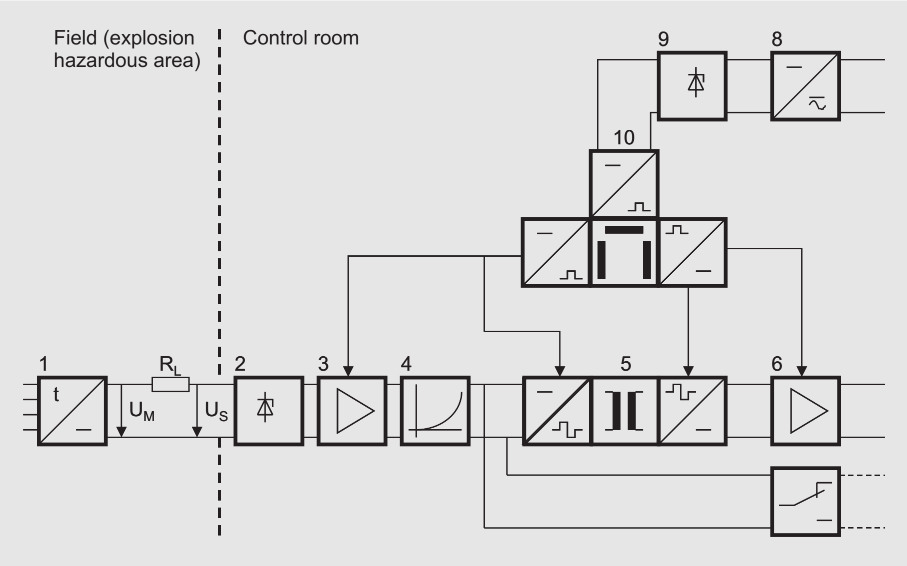

Fig. 5-22: Two-wire transmitter and isolator in an explosion proof design

The following conditions must be satisfied when connecting a transmitter to a power supply:

$$\boxed{U_M \leq U_S - 22\ \text{mA} \times R_L}$$

U_M = Minimum operating voltage for the transmitter
U_S = Minimum supply voltage of the power supply
R_L = Connection wire resistance between transmitter and power supply (loop)

If additional instruments, e. g. indicators are connected to the 4...20 mA loop, then the internal resistances (load resistance) of these instruments must be added to the connection wire resistance R_L. Programmable transmitters, such as the TTH300 or the TTF300, control their integrated indicators over a digital interface. In this case, the required power is supplied by the operating voltage U_M. It must not be considered separately. The maximum possible current is assumed to be 22 mA at the minimum voltage, since modern transmitters use the current range above 20 mA to signal error conditions. (see chapter 5.4).

The intrinsic safety of the interconnections is assured if the following conditions are satisfied:

Intrinsically Safe Equipment plus Cable e.g. ABB-transmitter		**Associated Equipment** e.g. Transmitter power supplies/SPC input
U_i	≥	U_o
I_i	≥	I_o
P_i	≥	P_o
$L_i + L_c$ (cable)	≤	L_o
$C_i + C_c$ (cable)	≤	C_o

The power supplies are available as 19"-cards for installation in 19" housings, in a snap design for rail mounting and plug-in designs for card mounting frames. The plug-in designs are moving into the foreground more and more because they reduce the wiring costs.

Power Supply of the Fieldbus Transmitters

A fieldbus barrier protects the main segment of the fieldbus from improperly connected field instruments and assures continued operation of the fieldbus. It incorporates the following functions and advantages:

- Electrical isolation between the main and branch lines to provide protection from problems which might occur due to potential differences and error currents due to potential equalization.
- The short circuit current limiters on the outputs prevents errors on the fieldbus segment. The segment continues to operate.
- Connections available for up to four intrinsically safe field instruments.
- Cascading of up to four fieldbus barriers per fieldbus segment.

- No additional distribution boxes required. For the last fieldbus barrier a switchable termination resistor is included that can be activate.
- Installation in explosion hazardous areas.
- Easy Ex-Loop-Check using the FISCO-Design.

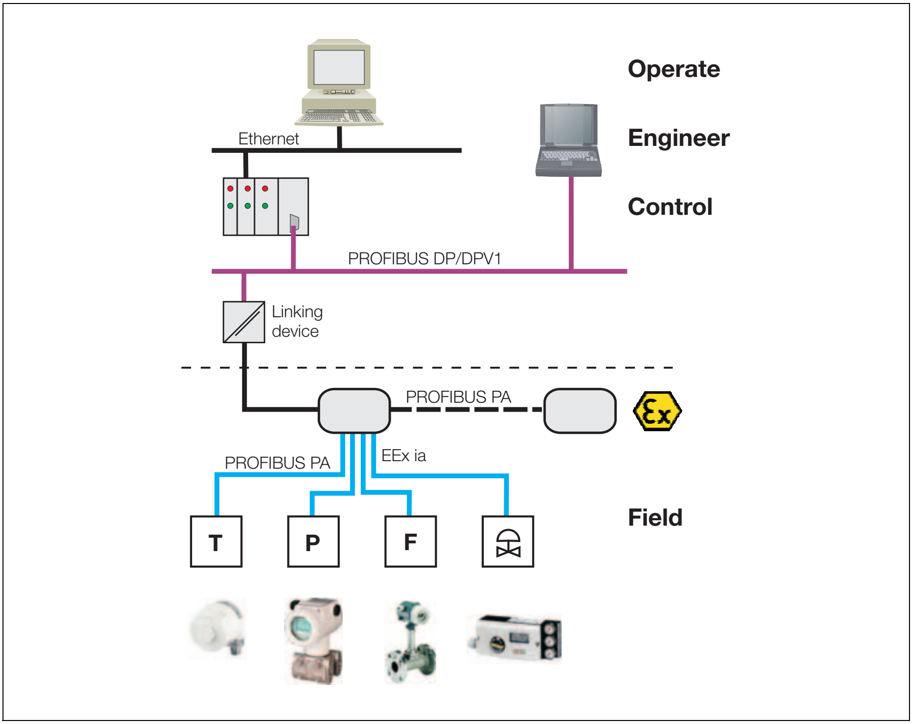

Fig. 5-23: Fieldbus supply using a fieldbus barrier

5.8 Electromagnetic Compatibility (EMC)

The EU-Directive 2004/108 EC (formerly 89/336/EWG) is controlling for the EMC (Electromagnetic Compatibility) of a temperature transmitter. The EMC requirements are defined in the International Standard IEC 61326 . The standards are defined in IEC 801-1 to IEC 801-6 and IEC 61000-4-1 to IEC 61000-4-17.

In addition to the basic generic standards, there are also product standards, which must be observed for the various instruments. In addition to the requirements in the EMC-Directive there are additional special requirements for the chemical industries, which are defined in the NAMUR-Guidelines (NE 21) and include or exceed the requirements in the basic generic standards.

The most common causes of interference are electric or electromagnetic in origin:

- Variations or short term interruptions in the supply voltage
- Static electricity discharges
- Electromagnetic fields
- Transient over voltage pulses (bursts) on the supply or signal connection cables
- Transient over voltage, energy rich individual pulses (spikes)

The originators of interference signals are often electric and electronic switches, relays, circuit breakers, frequency converters, fluorescent tubes, magnetic valves, motors, wireless equipment, as well as atmospheric disturbances such as lightning. In particular, the discharge of static electricity and the generation of electromagnetic fields often occur in the production process itself.

The interference behavior defines the reaction of an instrument to an interference using three evaluation criteria:

A. *No reduction in function*
Primarily for analog instruments, recognizable effects within the error limits are permissible. Pure digital instruments may not exhibit any recognizable effects.

B. *Reduction in function*
Evaluated is the effect on the function during the period in which the interference effects occur. Reduction of function during this time period is permissible. Subsequently, the function must return to its original status automatically without any permanent changes.

C. *Loss of function*
Evaluated is the effect on the loss of function from the start of the interference until it is restored automatically or manually. For operation outside of the tolerance limits the instruments must automatically return to normal operation or switch to a start ready safety setting.

For suppression of electromagnetic interferences, appropriate measures should be employed by the user when installing the instrument.

Measures	Guidelines and Recommendations
Current supply	– electrically isolated – symmetric – ground free
Installation	– power and signal cables routed separately – instrument not installed close to electromagnetic interference sources – provide lightning protection if installed outdoors
Cable shield	– assure sufficient potential equalization – exclude equalizing currents in shields – provide a cable shield preferably on both sides – ground cable shield to housing in the shortest way using large area connections

Modern electronic transmitters generally have the best possible disturbance reaction. They comply with the increased NAMUR requirements and guidelines and often actually exceed them. When the potential equalization is poor or the installation has a high degree of electromagnetic noise, it is not always possible to achieve the desired results. In such applications it may help to electrically isolate the low resistance shield from the system potential and only ground the cable shield at one end.

5.9 Temperature Transmitters using Interface Technology

In many installations the functionality of the in-/output assemblies of Stored Programmable Controllers (SPC) or Process Control Systems (PCS) is not sufficient, requiring an additional signal adapter stage. This might be the case when temperature measurements, transmitter power supply, electrical isolation, load increases or intrinsically safe signal circuits for explosion hazardous areas are required. These functions are performed by suitable interface components.

Analog Interface Technology

For the analog Interface Technology, 2 connection wires are required for each signal. The supervisory systems often contain 8 or 16 channel input cards. In order to connect to the input cards in these systems, an internal distribution system is required. If the signal connection wires have to be routed over a very long distance, the individual pairs can be connected to a larger cable containing multiple pairs of wires. In order to reduce the wiring and connection expenditures, interface components are installed on the prewired module carriers. The wiring level and the function level are thereby separated from each other. Without a module, a quick check of the wiring is possible. Easy plug-in technology allows quick connection to the module carrier or individual socket.

Digital Interface Technology

In the automation and process technology, the required field signals are often gathered from distant systems. In the classical, analog point-to-point wiring scheme, in which all signals are usually carried over 2 connection wires, long cable runs, many distribution boxes are required. Expenses are appreciably reduced when using a decentralized, digital interface technology (Remote I/O).

All in-/output modules are designed to be bus capable, so they can be connected to an open fieldbus over a bus coupler (gateway). In the module carrier the data is exchanged between the bus coupler and the I/O modules over a fast, redundant internal bus. The assignment of the field signals, is done using the software. The plug-in bus coupler allows adaptation to the fieldbus being used. Every bus coupler contains a complete process picture of all the connected field signals. The supervisory process control system or the controller communicate with the external fieldbus over the bus couplers. Expensive wiring in no longer necessary.

Fig. 5-24: Digital interface components S900

Bus coupler and the connected in-/output modules constitute one node. Larger numbers of participants are incorporated by adding additional nodes. The cycle time for the internal communication bus is in the range of a few milliseconds. The number of nodes, bus length and cycle time of the external bus structure depend upon the bus system used. Every bus coupler represents one participant. In order to increase the number of participants, the bus is extended from one bus coupler (bus node) to the next bus coupler. In order to increase the availability of the in-/output modules, the fieldbus connections can be designed to be redundant. The analog in-/output components are designed for HART-communication. All important measured values, diagnosis and configuration information from the connected HART field instruments are available over the bus and can be transmitted to the process control system. The programming of the HART-transmitters can be done directly from the process control system over the fieldbus, through the remote-I/O-level to the HART-instruments, without any problems. The temperature or HART-transmitters connected to a remote-I/O-system are therefore comparable to fieldbus transmitters in their function.

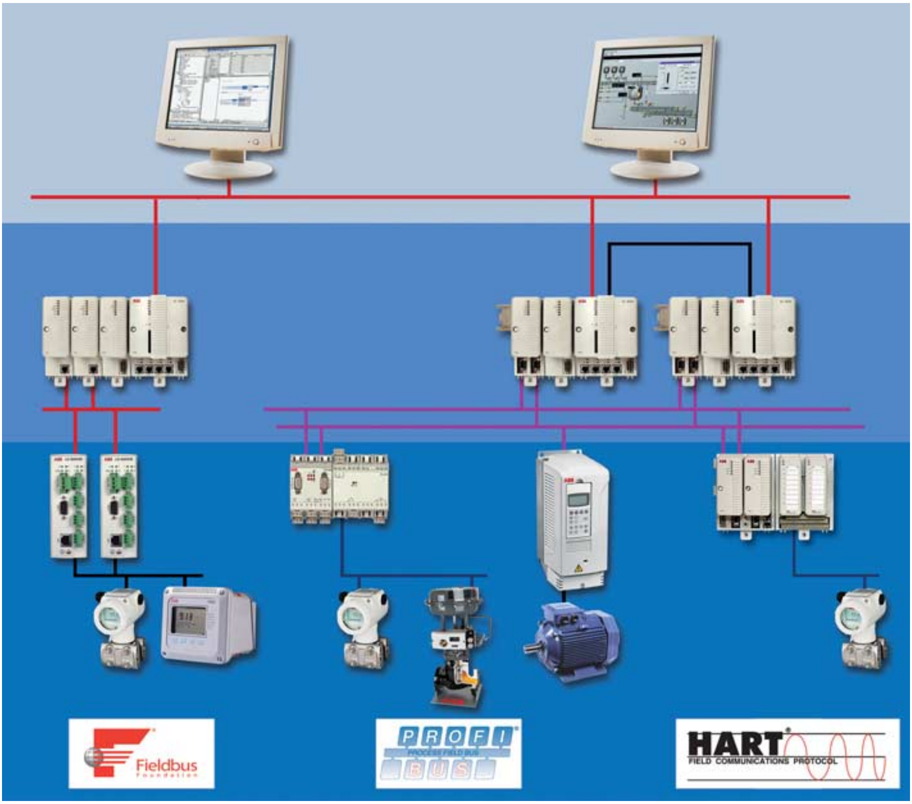

Fig. 5-25: Decentralized redundancy capable fieldbus interface components (with integrated HART or fieldbus communication)

The sensors or actuators to be connected are power supplied directly from the modules. The wiring for separate power supplies is no longer necessary. The highest possible degree of safety and noise insensitivity is assured by an power supply electrically isolated from the bus and short circuit proof in- and outputs. Modern remote-I/O-systems, such as the S900, also incorporate a comprehensive redundancy concept.

For applications in explosion hazardous areas an Ex-isolation module can also be used as the decentralized interface component for direct installation in Zone 1 areas.

Fig. 5-26: Compact remote I/O-system CB220 for zone 1 installation

5.10 High Accuracy Temperature Measurements with Programmable Transmitters

If an absolute accuracy of 0.1 K (± 0.05 K) is required, it is only possible if the entire measuring chain is calibrated as a unit. This will become clear after all the measuring values in the measuring chain are evaluated.

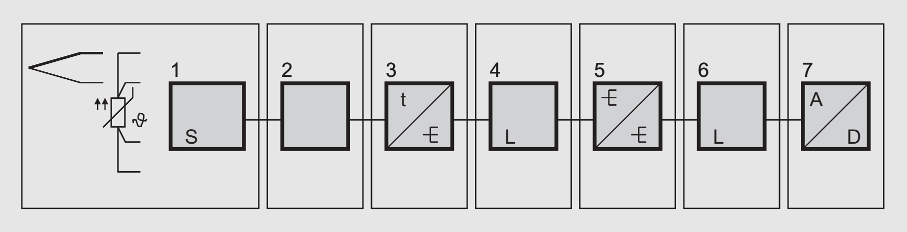

Fig. 5-27: Industrial temperature measuring chain from sensor to digitizer

In a typical measuring chain the temperature is measured by a sensor (1). The temperature signal is then fed to a transmitter (3) over the compensating cable (2). There the signal is amplified and fed to transmitter power supply (5) over another pair of connection wires (4). The signal is transmitted to an analog/digital converter (7) over more connection wires (6). Only after this conversion is the measured value in digital form and in no longer subject to changes. Tbl. 5-3 shows the typical, statistical errors occurring in the process industry for a 0...400 °C (32..752 °F) measurement with a resistance thermometer in a three-wire circuit.

	Measurement Uncertainty	**Cause**	**Typical Error**
1	Sensor	Tolerance Class A according to EN 60751, at 40 °C (104 °F)	0.95 K
2	Heat loss	Ratio insertion depth to diameter = 7 (see chapter 6.1.4, Fig. 6-2)	0.4 K
3	Self heating	Measurement current 0.3 mA	0.05 K
4	Signal connection wires	Three-wire circuit, noise	0.1 K
5	Transmitter	Accuracy 0.1 %	0.4 K
6	4...20 mA loop	Noise	0.05 K
7	Transmitter power supplies	Accuracy 0.25 %	1 K
8	4...20 mA loop	Noise	0.05 K
9	input to PCS/SPC	Accuracy 0.1 %	0.4 K
	Total uncertainty	Error sum, root mean square	1.55 K

Tbl. 5-3: Uncertainty of an industrial temperature measurement 0...400 °C (32...752 °F)

Additional errors due to the compensation cable and reference junction, when making measurements with thermocouples, must also be considered. The compensation cables has the same thermal voltage as the element material itself at a specific temperature. Above 100 °C (212 °F) appreciable differences may occur. This is especially true if the materials of the compensation cable are so called special alloys. Even within their allowable ambient temperature range, the compensating cables have a tolerance. In EN 60584 the deviation limits for the individual compensating cables are listed. This list indicates that for each element, and therefore each cable type, the deviation limits are a number of µV and therefore a deviation of number of K is possible. Dependent on the accuracy as well as the achievable thermal coupling of the reference junction an additional measurement error of 0.1 to 0.5 K must be considered.

In addition to these statistical errors, there are dynamic errors based on the finite response time of industrial temperature sensors (see chapter 3.4.4) and of the ambient temperature dependent errors due to measurement type used which must also be considered. The largest contribution to the ambient temperature errors can be attributed to the usually high temperature changes in the field at the transmitter. Typical values for the assumed example are 0.02K per 10K ambient temperature change.

Sensor head mounted transmitters, because of their proximity to the sensor, have the least interference on the sensitive signal connection wires. Their use, due to their not negligible ambient effects, only comes into play when the temperature variations at the sensor head are expected to be small. Otherwise, field mounted transmitters are preferred for high accuracy measurements. When the digital signal output from a fieldbus transmitter is used, the errors due to the analog signal processing in the transmitter power supplies or in the analog input circuits of the data processing instruments are eliminated. Since the largest contribution to the statistical errors comes from the sensor itself, fieldbus transmitters cannot make any appreciable improvement to the total accuracy. High accuracy measurements can only be achieved with temperature transmitters, if the statistical measurement uncertainty of the entire measuring chain is compensated.

Recalibration and recertification are common procedures for measuring locations that are subject to measuring equipment testing. To compensate for the statistical errors the temperature sensor is calibrated at many different temperature reference points. The curve produced by the comparison calibration in a precision temperature measurement system is stored in the non-volatile memory of the sensor head mounted transmitter. The calibration of field mounted transmitters is somewhat more complex, because the sensor and the transmitter must always be calibrated as a matched pair, if all the errors in the measuring chain are to be compensated.

Stated more precisely, for analog measuring circuits the input circuit of the data processing system, and the transmitter power supply, if used, must be connected during the calibration, because they make a significant contribution to the total error. In practice this is not done very often because of the complexity it entails. Calibrated fieldbus transmitters have a distinct advantage, because the use of digital signal transmission eliminates the additional signal errors.

The remaining measurement uncertainty is then only a function of the calibration equipment and the resolution of the correction curve. The achievable measurement uncertainty of the temperature sensors in the temperature range from 0...400 °C (32...752 °F) is ± 50 mK. This measuring accuracy can be documented by a DKD-Certificate (German Calibration Service) (see chapter 6.2).

6 Accuracy, Calibration, Verification, Quality Assurance

6.1 Accuracy

6.1.1 Basic Fundamentals

As with the measurements of all variables, temperature measurements cannot be made at any arbitrary accuracy. The result of the measurement is not only dependent on the variable being measured, but also on the measuring process being used, which is affected by very many other factors, which in turn also influence the measurement results.

Error effects may include:

- errors due to the incompleteness of the measuring instrument used,
- errors due to the influence on the (undisturbed) measured value by the measurement instrument (sensor),
- errors due to effects caused by deficiencies in the test model (especially during the evaluation),
- errors of a random type due to unforeseen factors resulting from predictable interference effects of an "experimental environment".

If an "error free value" is defined as the measured "true value" (an unknown which is to be determined by the measurement), then all the measurement values which result from repeated measurements under the same conditions and with a measurement setup of high enough resolution, will lie around the true value within a specific range (variation range). The measurement error of the individual measurements is defined as the difference between the measured value and the (actually unknown) true value.

Measuring error = measured value - true value

This raises the question, which of the measured values is closest to the true value and can serve as the result of the measurement? The simplest assumption states that the arithmetic average of all the measurements taken is very close to the true value and can be used as measured result. This value is the called the **correct value**, or sometimes the **best estimate** and can be calculated by the following equation:.

$$\overline{q} = \frac{1}{n}\sum_{i=1}^{n} q_i$$

n = number of individual measurements
q_i = result of individual measurements

The magnitude of its variation range within which the measured results are found, depends on the quality of the measurements and makes an approximate statement about the inherent uncertainty of the measurement results (measuring uncertainty).

The know-how of the technician is used to solve the measurement task in a manner that minimizes the number and scope of the undesirable interference effects on the measurement. In a qualitatively high quality measurement, the variation range measurements will be small as will be the measurement uncertainty.

6.1.2 Determining (Estimating) the Measurement Uncertainties

When measuring results are compared, e. g. during a certification test, statements, in addition to the measured value itself, regarding their reliability are also important. The specification of the measurement uncertainty has become established as a measure of the quality of the measurement. The determinations the measurement uncertainty must, in every case, be based on fundamental technical knowledge, i.e. on objective facts. Even then the results are subjective, because they are based on judgments using a number of assumptions and estimates. Such quality judgements will generally be accepted if the method used to make the judgements is clear. To estimate the measurement uncertainty, they are usually divided into two categories:

- Random measurement uncertainties (statistical error effects) and
- Systematic measurement uncertainties.

Systematic measurement uncertainties are predictable and correctable. They always occur under the same measuring conditions with the same magnitude and sign. A typical example of a systematic error is calibrating with uncalibrated test equipment. A digital multimeter, which has an error of 0.1 % in its 0.2 V measuring range, will always indicate a voltage of 199.8 mV when measuring exactly 200 mV; the reading will be low by -0.2 mV.

A measurement made with this instrument will produce an incorrect result. This measurement result can, using the specifications in the instrument's calibration certificate, be corrected eliminating the systematic measuring error.

Statistical measurement uncertainties are random measurement uncertainties and therefore their direction and magnitude cannot be predicted or corrected. The magnitude of the effects can be determined from repeated measurements under the same conditions can be defined by calculating a distribution curve from the measured results. If the measurement is subject to multiple random error effects, then this fact will also have an impact on the distribution curve for the measured values. For three or more random error effects it is probable that a normal distribution curve (Gaussian bell curve) will be approached. The descriptor values for a normal distribution curve are its average μ and its standard deviation σ.

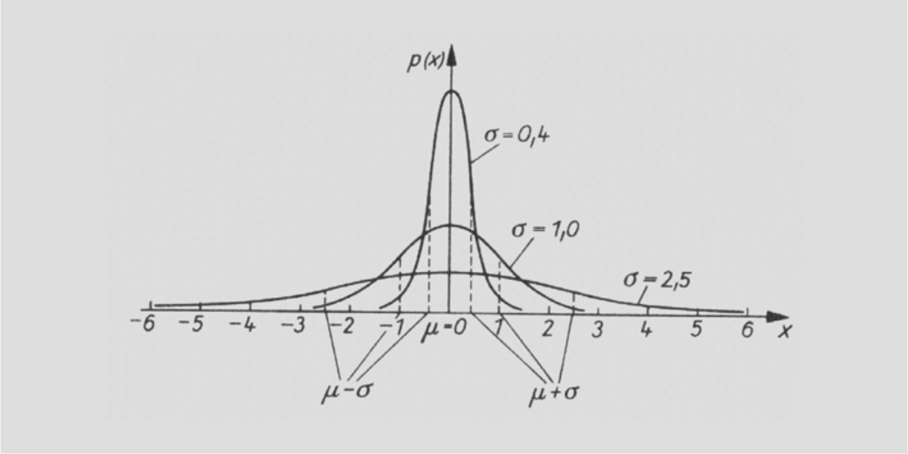

Fig. 6-1: Normal distribution curve (Gaussian bell curve)

Fig. 6-1 shows the typical shape of a normal distribution curve for a constant μ at different σ-values. The distribution function p(x) defines the frequency (probability), with which the individual measured values X_i will occur within the range of the average μ. For all curves, 68.3 % of all the measured values in the range of ±σ are around the average μ; σ therefore makes a qualified statement about the spread of the individual measured results. If the σ-range is extended by a factor k (k > 1, confidence factor), then more measured values can be expected to be within this range about the average.

It is customary to use a confidence factor k = 2 for the measurement uncertainty. Using this value, one can expect that 95.4 % of all measured values will be within this range (coverage probability of 95.4 %).

Values for the coverage probability P as a function of k

k =	1	2	3	4
P(σ) in %	68.3	95.4	99.73	99.994

The measurement uncertainty from the viewpoint of GUM
(**G**uide to the Expression of **U**ncertainty in **M**easurement)

All previous considerations started from the basis that for every measured value a true value exists. In practical measurements true values do not exist, or at last, are unknown. Around 1980, on the initiative of the CIPM (Comité International des Poids et Mesures = International Bureau of Weights and Measures, in Sevres near Paris, France) an approach was defined (Recommendation INC-1 (1980)), which is based totally on experimentally determined measurements. Therefore, for every measured result, there exists a value for a correction to the systematic measurement uncertainty, always consisting of a value and its associated uncertainty. GUM uses a so-called standard measurement uncertainty and sets it essentially equal to the basic distribution curve for the measured value. To differentiate, the standard measurement uncertainty per GUM is designated by the letter u while for the standard deviation, the normal distribution is usually designated by the symbol σ.

The total measurement uncertainty of a measurement, which is composed of a number of factors, is usually calculated as the geometric sum (square root of the sum of the squares) of the individual standard measurement uncertainties. The calculated total measurement uncertainty is usually stated with a confidence interval k, in order to achieve the desired coverage probability.

The GUM method differentiates between two categories for calculating the measurement uncertainties:

Type A-Uncertainties are all the uncertainty components of a measurement, which result from the repeated measurements method (*n* independent, observations made under the same measuring conditions) and can be described by specifying a numerical standard deviation (σ-value). Included in the Type A-uncertainties are, e. g. correction specifications contained in the calibration reports, for which the distribution function for the calibration is known or is specified (generally a normal distribution).

Type B-Uncertainties are all the uncertainty components of a measurement, which cannot be defined after repeated measurements and analysis from the resultant distribution function, because of the inability to make repeated measurements. Typical B-uncertainty specifications include, e. g., the measurement accuracy specifications in a data sheet. Here one only knows, that with such an instrument the maximum deviation of the measured values from the true value will be within the error limits stated in the data sheet. What the probability of a measured value being in the middle or at the limits of the range is unknown to the user.

Type B-uncertainties are always assumed when concrete value specifications cannot be made regarding the uncertainties and one therefore has to rely on estimations based on experience. Hereby it is necessary that a realistic distribution function is established by an analysis of the measuring procedure

Thus GUM uses not only a measurement uncertainty interval to describe contributions to a measurement uncertainty, but even more probability distributions.

6.1.3 Measurement Uncertainty Estimations using a Practical Example

A simplified example would be the estimation of the measurement uncertainty for the measurement of the “true“ temperature in a tube furnace. The temperature of the tube furnace is determined using a Type S (Pt10%Rh-Pt) thermocouple. The thermocouple was calibrated and a calibration report is available. The furnace is controlled to a temperature of 1000 °C (1832 °F) by an electronic controller.

The thermal voltage generated by the thermocouple is measured using a digital voltmeter using a measuring location selector switch. The thermocouple has a reference junction temperature of 0 °C (32 °F). For the thermal voltage measurements a 7 1/2 digit instrument with a measuring range of 200 mV is used. The voltmeter was calibrated and a calibration report is available.

The total measurement uncertainty consists of the following measurement uncertainty components

Type B-measurement uncertainty components:

1. The accuracy and stability of the reference junction temperature is estimated at 0 °C (32 °F) to be ± 0.1 K. The distribution function of the uncertainties has a uniform distribution.
2. The uncertainty, consisting of the non-homogeneities of the thermocouple is estimated (results from previous evaluations) to be ± 0.3 K (uniform distribution).
4. The measuring location selector switch produces parasitic thermal voltages (contact resistance), which cause errors in the measured value. From the data sheet for the instrument, maximum parasitic thermal voltage uncertainties of ± 3 µV are used. These correspond to a temperature uncertainty of ± 0.2 K.
5. The uncertainty of the calibration of the thermocouple is specified in the calibration report as ± 0.8 K. For this value, a confidence interval of k = 2 has been specified, which yields a probability of > 95 %.
6. The uncertainty in the calibration of the voltmeter is ± 3 µV (k = 2, standard distribution).

Type A-measurement uncertainty components:

7. The thermal voltage is measured 20 times at approximately 1 minute intervals. An average and the standard deviation of the measured values are calculated.

   The resultant standard deviation is ± 4 µV. This value is used as the standard uncertainty of the measurement value acquisition in determining the total measurement uncertainty. The variation range of ± 4 µV is caused, among other things, by random interferences (electromagnetic interferences, thermal noise, etc.), and also includes time dependent effects due to controller loop variations.

   From the calculated average, using the specifications in the calibration reports of the thermocouple, the exact oven temperature can be calculated.

No.	Description	Uncertainty (X_i)	k	Distribution	Factor for standard uncertainty	Standard uncertainty $U(X_i)$	Sensitivity C_i	Uncertainty contribution (K) $U_i(y)$
1	Accuracy and stability of the reference junction	0.1 K	1	Normal	1/1.73	0.06 K	1.0	0.06
2	Non-homogeneity of the thermocouple	0.3 K	1	Normal	1/1.73	0.17 K	1.0	0.17
4	Parasitic thermal voltages of the selector switch	3 µV	1	Normal	1/1.73	1.7 µV	0.05 K/µV	0.09
5	Uncertainty of the thermocouple calibration	0.8 K	2	Standard	1	0.4 K	1.0	0.4
6	Uncertainty of the voltmeter calibration	3 µV	2	Standard	1	1.5 µV	0.1 K/µV	0.15
7	Uncertainty of the measured value acquisition	4 µV	2	Standard	1	4 µV	0.1 K/µV	0.4
								1.27

Tbl. 6-1: Uncertainty estimation for tube furnace temperature measurements

The measurement uncertainties calculated for the tube furnace from the values specified in the calibration report is ≅ ± 1.3 K. At a confidence factor of k = 2 (coverage range = 95 %), gives a measurement uncertainty of ± 2.6 K.

6.1.4 Error Effects for Temperature Measurements

Basic Considerations

Users always raise the question, what tolerance class is required for a temperature sensor in order to make the temperature measurements within the required accuracy? Every real temperature sensor has a curve, which deviates more or less from the ideal curve, as it is defined in the standards. Since temperature sensors cannot be manufactured to any arteriolar accuracy, the standards define the deviation limits from the standard curves within which the measurements made by a real temperature sensor must lie. Basically two tolerance classes are defined, an expanded tolerance class (Class B or Class 2) and a more restrictive tolerance class (Class A or Class 1). There can also be other tolerance specifications which are agreed to between the user and the manufacturer and defined in the purchase order.

Temperature sensors, which meet the requirements for a specific tolerance class, are usually “picked“ from a manufacturing batch. Even the more restrictive tolerance class A (e. g. for measurement resistors Pt100 according to DIN EN 60751) always include some measurement uncertainties (e.g. ± 0.35 K at 100 °C (212 °F) or ± 0.75 K at 300 °C (572 °F)), which could be unacceptable for precision measurements.

If a special tolerance classification is defined in the purchase order, which is even more restrictive, it becomes more and more difficult to find a temperature sensor, which can fulfill these requirements. This is especially true if the tolerance limits are to be maintained over a wide temperature range. Sensors with such narrow tolerance limits are therefore very expensive.

The accuracy requirements to temperature measurements has increased dramatically in recent times. A few years ago, the measurement uncertainty achieved by a Class A sensor element was still “considered to be the one to beat“. Now these accuracies are no longer satisfactory for many applications. The following requirements have become more important in recent years:

- Measuring smaller temperature differences between the in- and outlet temperatures of cooling towers (increasing the efficiency of the cooling tower). At the same time, certain maximum outlet temperatures may not be exceeded.
- Measuring the temperature difference between the reactants added in a chemical reactor and the end product of the reaction, for continuous energy balancing as a preventative measures for explosion/process interruption protection.
- Measuring more exactly process temperatures in the pharmaceutical industries during the manufacture and processing of temperature sensitive products.
- Measuring more exactly process temperatures in the sterilization procedures in the milk and dairy product industries (UHT milk).
- Measuring more exactly processing temperatures for sterilization in biochemical systems.

A very effective method for satisfying the application requirements described above is offered by the precision calibration of a temperature sensor which initially has some arbitrary tolerance (e. g. Class B). In the calibration report, the relationship between the temperature and the resistances or thermal voltages established during the calibration are documented and can be utilized by the user to correct the measuring results.

If the temperature sensor is connected to a programmable transmitter, then the correction factors can be stored in the transmitter. For the user this combination, whose input is the temperature measurement itself and whose transmitter output value in mA, behaves like an ideal temperature sensor in accord with the standard. The remaining error is reduced by an order of magnitude and is only limited by the accuracy of the calibration itself and the digital resolution of the transmitter (typically between 0.05 K and 0.1 K). This method provides a cost effective alternative to the expensive selection of highly precise temperature sensors.

Error effects due to “natural“ uncertainty components of yet unused sensors

As already mentioned, temperature sensors cannot be manufactured to any arbitrary accuracy. This is in part due to the manufacturing processes and to the purity of the materials used.

Particularly for non-precious metal thermocouples, the non-homogeneities in the composition or structure of the alloys can lead to appreciable measurement uncertainties. Non-homogeneities can only have an effect on the measured results when they are in the range of the temperature gradient. Non-homogeneities can be manufacturing related, they can be operation related or they can be first noticed in the application phase. Non-homogeneities can lead to errors of several K, and in some special cases, up to several hundred K.

Strong mechanical stresses, e. g. severe bending or kinking of the thermocouple wire, can produce non-homogenous sections by changing the material structure. A suitable annealing procedure for the thermocouple wire, in some instances, can reverse the non-homogeneities to a certain degree.

For thermocouples Type K (NiCr-Ni), as well as for all other thermocouples, which have a NiCr-leg, the effect of the so-called K-Condition should be considered. Before applying, assure that the Type K thermocouples are installed only after they have been subjected to a stabilizing annealing (see also chapter 3.5). The measuring error caused by the K-Condition can be in the order of 2 K to 5 K.

Error effects, which occur during the operation of the sensor

The accuracy of an unused temperature sensor unfortunately does not remain constant during its operating life. The temperature sensor experiences aging (drift) (see chapter 3.5).

Measurement uncertainty effects, caused by drift, are very difficult for the user to recognize, because their effects occur very slowly and usually go unnoticed. The start of a drift processes and its effects can only be determined by regularly monitoring the temperature sensor (periodic recalibrations) and quantifying by magnitude and direction (see chapter 6.2.10).

Other contributors to the measurement uncertainties when operating thermocouples are the small internal resistances of other connected instruments. Thermocouples are high resistance sources, thermocouple wires may have resistances of several kΩ.

Connection lead resistances when using resistance thermometers in a 2-wire circuit must be considered, when they are a non-negligible component of the sensor resistance (see chapter 3.6).

The ohmic resistance of the connection leads between the measuring instrument and the measurement resistor add to the actual measured sensor value. The temperature indications will be too high. Compensation measures include adjusting the measuring circuit, or accounting for the connection lead resistance during the signal evaluation. It is for this reason, that for a resistance thermometer in 2-wire circuit, the connection lead resistance from the sensor element to the connection socket are included in the specifications. It is assumed, that the correction value for the connection lead resistance does not vary over the measuring temperature range. The connection leads, however are subjected to certain temperature effects, which could change the resistance value of the connection lead. Therefore this correction may include a certain error component.

The order of magnitude of real connection lead resistances is shown in the following table. Listed are the lead resistance for a 1 m (39”) long pair of connection leads (in and out), made of copper, as a function of the wire cross section.

Wire cross section (mm^2)	0.14	0.22	0.5	0.75	1.5
Resistance (Ohm/dblm)	0.638	0.406	0.179	0.119	0.06
Resultant error for Pt100 (K)	+1.7	+1.1	+0.5	+0.3	+0.2

Tbl. 6-2: Ohmic resistance of a Cu-wire (dblm = double meter) and the resultant measuring error

If the connection lead resistances are known, they can be considered when the measured signal is evaluated. The hard to estimate temperature effect of the connection lead resistance remains as a measurement uncertainty component. This effect can be essentially eliminated by utilizing *resistance thermometers in 3- or 4-wire circuit designs*.

Parasitic thermal voltages are undesirable voltage components, which are generated by the different metals and alloys in the measuring circuits at the connection points, when these are in a temperature gradient. They cause errors not only in the resistance measurements, but also in the thermal voltage measurements. These metal transitions occur primarily at the connection or extension locations for the connection leads of the temperature sensors.

They can introduce an appreciable temperature load and generate parasitic voltages at the connection sockets, especially for short measuring insets. A measurement of the parasitic thermal voltages, or a systematic estimation of the errors they cause for a possible correction, is hardly possible. Dependent on the polarity of the generated voltages, the measuring error will result in indications too high or too low.

For resistance measurements a polarity reversal of the measuring current is a simple method to check the effect of parasatic voltages on the measurement. Two measurements are made, one immediately after the other, with the same measuring current, but with a reversed polarity. If there is an appreciable difference between the two measurements, then it is due to parasitic thermal voltage effects. The arithmetic average of the sum of the absolute values of the two measurements is then the error corrected measured value. High precision instruments offer special methods for compensating parasitic thermal voltages occurring during resistance measurements. Parasitic thermal voltage effects for resistance measurement can also be completely eliminated by using an AC voltage bridge.

Error components due to “incorrect“ compensating cables

Thermocouples with long cable lengths, beyond a certain point (ambient temperatures < 200 °C (392 °F) or < 100 °C (212 °F)), are usually elongated with more economical materials, the compensation cables.

The thermal voltages generated by the legs of the thermocouple can differ appreciably from those made of the compensating cable materials. As long as both legs at the connection locations to the compensation cables are at the same temperature, no measuring error is introduced. However, if the connection locations are in a temperature gradient, then errors due the incorrect thermal voltages can result. The extension of thermocouples using compensating cables is only successful, when compensation cables *matched* to the thermocouple are installed with the correct polarity.

Measuring errors, caused by improperly selected or incorrectly connected compensation cables, can lead to errors of several tens of K. For precision thermal voltage measurements, the use of “extended“ thermocouples is generally not recommended.

Error effects when evaluating the measuring signal

All temperature sensors have a *nonlinear curve.* When converting the measured signal into a corresponding temperature value, this nonlinearity must be considered. Incorrect or not-considered nonlinearities in the curve can lead to measuring errors of several K. If curves are approximated, linearity errors whose magnitude is a function of the degree of linearization may occur.

An *incorrect or not-considered reference junction* is a classical error when employing thermocouples. The output signal of a thermocouple is always proportional to the *temperature difference* between the hot and cold ends. Only after the requirement that the temperature at one end is known can the temperature at the other end be determined. The reference junction is the connection location (the one end of the thermocouple), at which a known temperature exists. The reference junction is usually maintained at a temperature of 0 °C (32 °F) by using an ice/water mixture. Other reference junction temperatures (20 °C (68 °F), 50 °C (122 °F)) are also common.

For thermocouple measurements with direct indicating measuring instruments, a reference junction is usually integrated in the instrument. The temperature at the connection terminals of the instrument is continually measured and added to the temperature value calculated from the thermal voltage measurements. If the reference junction is not considered, then the measured temperature value is incorrect by the amount equal to the ambient temperature.

If an estimated value for the temperature to be measured is not available, then the not considered reference junction temperature often remains completely unknown. If the reference junction is taken into account, but with an incorrect value, then the difference between the true and the assumed reference temperature values causes an error with the same order of magnitude on the measured result. The exact measuring error however, is still dependent on the value of the measured temperature.

Error effects due to the practical implementation of the measurement task

All considerations to this point have been based on the fact that the temperature of the sensor is the temperature that is to be measured. Thermocouples and resistance thermometers are contacting thermometers and must be in good thermal contact with the medium in order to assume its temperature. *Contacting thermometers can only measure their own temperature!* This seems to be a trivial observation, but it is an important consideration when selecting the measurement location in the process.

If the temperature measurements are made at an unsuitable location, then even though the temperature is measured very precisely, the measured value will be of questionable value. If the measurement is made at the correct (representative) location, this is still not a guarantee that the measurement will be free of systematic error effects.

Incorrect sensor temperatures can result from other reasons. If temperatures which are changing with time are to be measured, then the dynamics of the temperature sensor must be capable of following the changes. The time response is generally defined by the response time (τ_0) parameter. If the response time is large in comparison to the rate of change of the temperature to be measured, then the result will be a systematic error because the temperature sensor always “lags“ the changing temperature being measured by a certain amount.

The problem of excessive heat loss is also an error source that can occur in actual measurements. Behind this occurrence is that fact that contacting temperature sensors continuously remove heat from the measured medium to the temperature sensor (hot measuring location) and from there to the ambient temperature (through the cold end) of the temperature sensor. In other words, energy is constantly being withdrawn at the measuring location: it cools. If temperatures are to be measured that are less than the temperature of the “cold end“, then this process is reversed and energy is added at the measuring location, it warms.

The magnitude of this heating or cooling is primarily dependent on:

- the insertion depth of the temperature sensor,
- the diameter / cross section ratio of the temperature sensor,
- the heat transfer of the materials used,
- the heat transfer between the medium and sensor,
- the temperature difference between the measuring location and the ambient temperature.

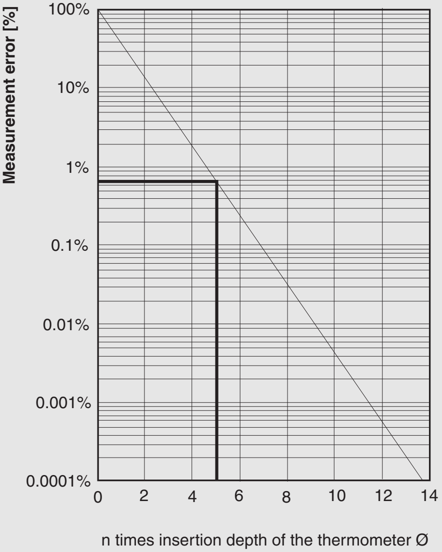

Fig. 6-2: Dependence of the thermal loss errors to the ratio of the insertion depth to the diameter of a temperature sensor for liquids

From the curve it can readily be seen that a temperature sensor must have a minimum insertion depth, in order not to exceed a prescribed thermal loss error. In the example, the minimum insertion depth of 5 x the diameter of the inserted temperature sensor is required for thermal loss errors of <1 %. For temperature measurements in gases, the recommended value should be at least doubled because of the poorer heat transfer.

Measurement resistors are passive sensors. They must be supplied with a measurement current in order to produce a resistance proportional measuring voltage. The current generates in the measurement resistor a definite power loss with the magnitude

$$P_{\text{loss}} = I^2 * R$$

The measurement resistor is actually a small heater element and converts this power loss into heat. The result is an undesirable temperature increase in the sensor, called *self heating*. Therefore the temperature sensor detects a temperature which is higher than the actual temperature of the medium.

The magnitude of the self heating is a function of a number of factors:

- the measurement current setting,
- the thermal mass of the sensor element,
- the removal of the temperature increase by the medium.

For typical measurement currents of 1 mA, the power loss in a 100 Ω measurement resistor is 0.1 mW. For sensors well insulated from the ambient, a self heating effect larger than 0.5 K can result. This is particularly true in non-moving gases, because the heat transfer to the medium being measured is very low.

In recent times, there is a tendency towards higher standard measurement resistors (Pt200, Pt500, Pt1000), because these, at the same measurement current, produce higher voltages, but also generated more self heating. The errors effects on the measured value increase.

Generally the self heating effects can be reduced by lowering the measurement current. Precision measurements (e. g. for quality calibrations) as a rule are conduced at two different measurement currents, which are different by a factor of $\sqrt{2}$. The measurements are conducted at single and doubled power losses, from which the measured value can be extrapolated to a measurement current of zero. Specifications of the self heating behavior for the more common sensor or measurement resistor designs are given by the manufacturer in the data sheets. The user can then easily estimate the magnitude of the self heating error for a particular measuring current. There are no self heating effects in a thermocouple.

Temperature sensors, used for the measurement of flowing media, are subjected to appreciable *vibration loads*. For continuous vibration excitations, the effects of excessive resonance conditions can lead to destruction of the entire sensor. Even if no external damage is visible on the temperature sensor, vibration loads can prematurely damage the sensor element. A subtle measuring value deviation (drift) is usually the result of sensors exposed to high vibration conditions (e. g. exhaust gas sensors for large Diesel motors indicate such typical behavior). Special vibration resistant designs, in combination with regular recalibrations, provide corrective measures and operational security.

The term *electromagnetic interferences* (EMI) means the presence of undesirable interference voltages in the measuring circuit, generated by time changing external electric or magnetic fields, emanating from electric motors, transformers, power lines or thyristors. Also high frequency radiation can generate electromagnetic interferences. Leak currents, due to damaged electrical heaters, or so-called ground loops can also produce electromagnetic interference in the measuring circuit. The ability to withstand or suppress such interferences is defined as electromagnetic compatibility (EMC).

The interference due to *electrical AC fields* can be reduced by adequately shielding the connection wires. The effects of *magnetic induced EMI intervenes* on the other hand can hardly be reduced using shielding methods, unless the shield materials are very thick. The only possible solution is to space the measuring circuit and the EMI-sources as far apart as possible. If interference is still present, the measurement connection leads should be routed very close to each other and in parallel if possible. Twisted pairs or coaxial cables provide good protection against *AC magnetic fields*. Another method to reduce the interference signals is to shorten the interference sensitive signal path and transmit the signal over the remaining distance using the mA output signals from a transmitter.

At higher temperatures even the best insulation materials lose their insulation resistance properties. The insulation behavior of an ceramic oxide e. g. is reduced by approx. an order of magnitude for every temperature increase of 100 °C (212 °F). *Leakage currents* are the result. They are superimposed on the measuring signal and cause errors. Here the use of temperature sensors with grounded metallic protection sheath is recommended. The leakage current then flows through the grounded sheath and not through the sensor element and its measuring circuit.

The influence of *ground loop effects*, which are caused by the compensating currents flowing as a result of the differing ground potentials in a measuring circuit, can also be effectively suppressed by using grounded metallic sheaths for the temperature sensors.

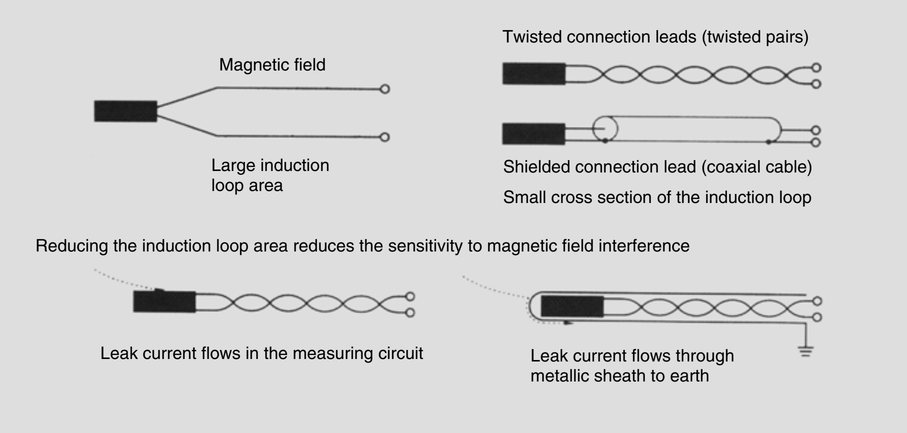

Fig. 6-3: Use of shields to prevent leakage currents

6.2 Calibration and Verification

Temperature sensors are prone to a general aging phenomenon which is usually called drift. The magnitude and size of the drift cannot be defined without detailed specifications about the actual installation conditions. Even if these specifications are available, quantifying the drift process is extremely difficult. As a last resort, cyclic measurement tests of the temperature sensor are required to assure, that after long term use, the required specifications relative to the accuracy are still applicable.

These measurement tests are usually called calibrations. Calibrations are conducted to assure that the high quality level of the temperature sensor is maintained for the required measurement tasks, even though the sensor itself is subject to a continuous aging process.

6.2.1 Definitions

Calibration in the metrology field:
Determination of the deviations of a finished product from the defined design values.
The design values are either defined in applicable standards, directives or in other specification documents. They can also be defined by separate agreements between the contracting partners.

During the calibration *no changes are made to the instrument being tested!*

Calibration of a temperature sensor is understood to mean the determination of their measurement deviation. This is the deviation between the output signal of the temperature sensor at the calibration temperature, and its design value at that temperature. The calibration only provides information about the deviations of the test object at the time of the calibration. Information about the time dependency of the accuracy of the test object during its operating time cannot be provided based on the reasons mentioned earlier. The calibration results are documented in a calibration report.

Adjusting a measuring instrument:
Making changes in an instrument with the goal of either adjusting the settings so that the measurement deviation found during the calibration:

- are as small as possible, or
- that their contribution to the measurement deviation after the adjustment no longer exceed the specified error limits.

Care must be exercised when changing the settings to protect against unintentional changes (labels, seal marks, seal paint etc.). Documentation of the adjustments in the form of certificate is absolutely necessary.

Verification according to national standards is understood to be an accredited calibration. Verifications can only be conducted by approved calibration bodies or by test facilities designated by them. Verifications may only be conducted on products which have been approved under the verification laws and calibration regulations. Products, which are to be verificated, must have been undergone a design type examination (Test Examination Certificate).

The intent of such a test is to ascertain whether the measurement stability can be maintained for the duration of the certificate (long term stability) and that protection against manipulation exists. The type tests include tests conducted on a number of representative instruments of the same design (first sample tests). If the test objects satisfy the requirements, the product is issued a type examination certificate. The design is then “frozen“.

The actual verification procedure corresponds to a calibration, but only the adherence to the allowable error limits is measured. The verification is identified by a stamp on the instrument. Although verification certificate is usually issued, this is not mandatory for all verifications. The values resulting from the calibration are recorded in the verification certificate.

6.2.2 Calibration Methods for Temperature Sensors

There are two basic methods for calibrating temperature sensors.

For **Fixed Point Calibrations** the temperature sensors are exposed to a known temperature. This is produced in high purity materials (e. g. metals) which are heated until they are completely molten and then cooled slowly. A constant temperature exists during the transition stage beginning at the moment of solidification. Under ideal process conditions, this equilibrium status, and thereby a constant temperature, can be maintained for several hours.

In the specifications of ITS-90 values are assigned to these fixed points, which are practically identical to the thermodynamic temperatures. For the solidification point of Aluminum e.g. the fixed point temperature $t_{90} = 660.323$ °C (1220.5814 °F). Fixed point calibrations are calibration methods with the smallest measurement uncertainties. However, they are very expensive to conduct.

For **Comparison Calibrations** (also called comparison measurements) the test object is exposed to an unknown temperature. This temperature is produced in a so-called calibrator. Calibrators can be stirred liquid baths (to approx. max. 550 °C (1022 °F)) or so-called block calibrators. At higher temperatures (especially for thermocouple calibrations) tube furnaces are usually employed, whose limited thermal properties can be appreciably improved through the use of so-called compensation bodies (metal inserts) or heat pipes.

The function of these calibrators is to produce a selectable temperature within a defined calibration volume, stable with time, and spatially homogeneous. A so-called comparison standard is exposed to the temperature together with the test object. The output signal from the comparison standard and the test object are measured over an extended period of time. The output signal from the comparison standard is used as a measure of the existing calibration temperature.

Comparison calibrations by nature have higher measurement uncertainties than fixed point calibrations. The calibration expense, however, is appreciably less and calibrations can be conducted at practically any temperature.

6.2.3 The Traceability of the Calibration

Looking at the comparison calibration it can be recognized, that in a certain sense it is the transfer of the “accuracy“ (measurement uncertainty) of the comparison standard to the test object. Of course, other measurement uncertainty components also come into play. They result e. g. from the measured data acquisition during the calibration or from non-homogeneous calibration bath temperatures. The resulting measurement uncertainties of the test object must by necessity be larger than those of the comparison standard used. It should be possible to use this test object at another location as a comparison standard. Each step entails an increase in the measurement uncertainty.

The comparison standards with the least measurement uncertainties, the national comparison standards, are maintained and made available in Germany by PTB, the National Institute of Technology and Science (Physikalisch-Technische Bundesanstalt). PTB calibrates to customer order the so-called reference comparison standard against the national comparison standard. The reference comparison standards are comparison standards of the highest order e. g. used in DKD (German Calibration Service) certified calibration laboratories. The factory comparison standards, i.e., the comparison standards used to continuously conduct the calibrations, are calibrated against the reference comparison standards.

The factory comparison standards are used, as a rule, to calibrate the production test equipment used for the manufacturing inspections. A calibration hierarchy exists made up of a definite number of calibration levels. This calibration hierarchy assures that the results measured by the production test calibration equipment can be traced back, over a complete set of links, to the national comparison standards. The comparability of all the calibration results is thereby assured. This concept is called “traceability“. The traceability of the measured results is a fundamental requirement of QA Systems according to EN ISO 9000.

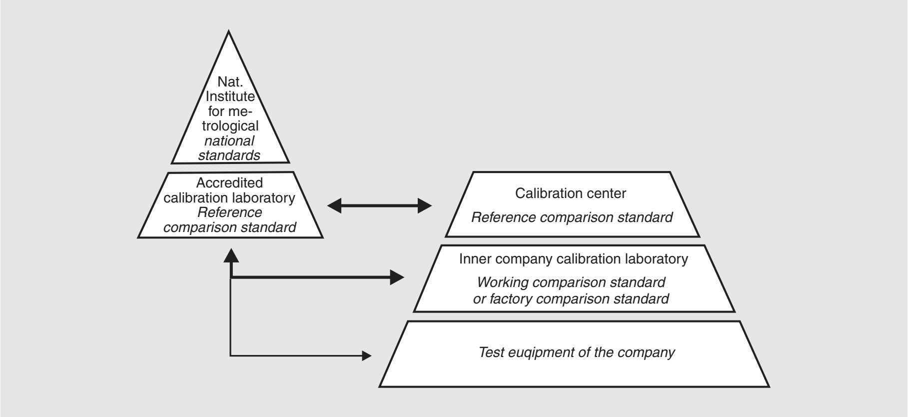

Fig. 6-4: Calibration hierarchy

6.2.4 Suitable Standards

For the test instruments in the various levels of the hierarchy, there are specific requirements relative to their technical specifications. This is particularly true relative to their long term stability and freedom from hysteresis. Towards the peak of the triangle the requirements always become more stringent. Therefore the resistance thermometers, to be used as standard thermometers for representing ITS-90 (the highest level of the pyramid), may only be made of spectral pure Platinum material. Thermometers in this design, are usually used as reference comparison standards in laboratories.

If thermocouples are used as reference comparison standards, only precious metal thermocouples (preferably Type S (Pt10%Rh-Pt)) come into consideration. These thermocouples must have an especially homogeneous alloy composition, so that any non-homogeneous temperature distributions which may exist in the calibration oven outside of the actual calibration area, cannot affect the measured result.

For use as a *factory comparison standard* resistance thermometers according to EN 60751 are completely acceptable. Even so, they should be selected after an intensive preliminary test from the best samples, relative to their stability, freedom from hysteresis and high insulation resistance, from the spread of normal production runs. Especially in regard to their insulation resistance, the requirements of EN 60751 should only be considered as minimum requirements. A usable thermometer, which should provide good service as a comparison standard, must definitely exceed these requirements. The industry offers for such applications special designs.

6.2.5 The Water Triple Point

Fixed point calibrations are calibrations with the smallest measurement uncertainties. Typical for such measurements are measurement uncertainties in the range from 0.5 mK to 5 mK (in temperature ranges: 0.01...660 °C (32.02...1220 °F)). They are also calibrations requiring the highest expenditures in equipment and time. Fixed point calibrations are only used in a few calibration laboratories.

The triple point of water is the only fixed point that can be found in practically all high quality calibration laboratories. It is the most important definition point in the ITS-90 scale and is used for regular testing of the comparison standard thermometers (reference comparison standards) in the laboratory. The triple point of water has a defined temperature t_{90} = 0.01 °C (32.02 °F) at a high precision (measurement uncertainty < 5 mK) and is therefore especially suited for finding the smallest deviations of the resistance of the comparison standard from its design value. Based on the magnitude of such a deviation, a decision can be made if the comparison standard should be recalibrated or if it can continue to remain in service.

To produce the water triple point a triple point cell is used.

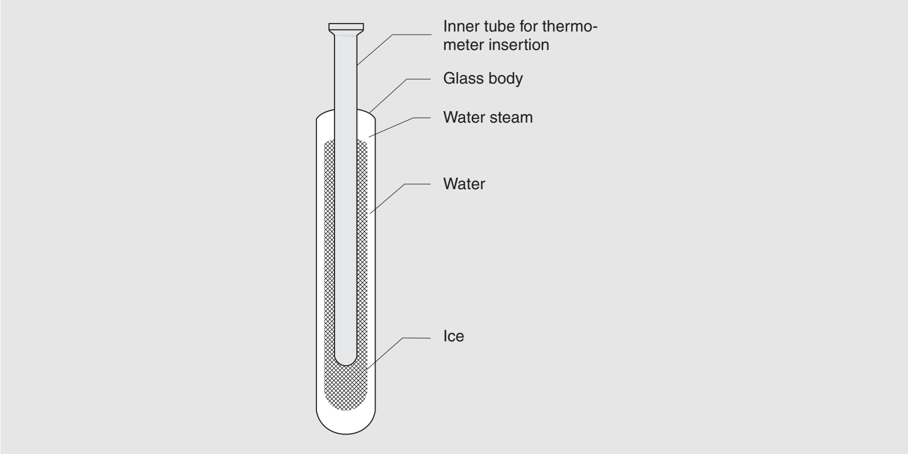

Fig. 6-5: Triple point cell

Since its introduction, ITS-90, has replaced the previously used value for the freezing point of water (0 °C (32 °F)) by the water triple point.

6.2.6 Documenting the Calibration Results

A calibration without documentation is practically worthless. A report or certificate should be used to document the results of the calibration and its traceability to the National standards and be in agreement with the International System of Units (SI). It is the proof of the quality of the calibration object.

In the industrial sector, it also provides quality assurance in a variety of forms. The best known is the certificate according to EN 10204 (formerly DIN 50049), which is the recognized form for material configuration and material testing. In addition, quality certificates according to DIN 55350 Part 18, form the certification basis when special quality requirements of any type were agreed upon in the purchase order. The named standards regulate which results are to be included in a particular certificate and who has the authority to issue such a certificate, but they make no statements regarding its format or any additional contents of the certificate. The contents and formats for the *Calibration Certificates of the German Calibration Service DKD* however are regulated in script “DKD-5“.

DKD calibration certificates consist of a cover page, with general specifications for the item being calibrated, information about the customer and the laboratory performing the tests. In addition, there are statements relative to the international acceptance of the DKD calibration certificates within the framework of the EA (European Cooperation for Accreditation), which is based on multilateral agreements. The following pages of the calibration certificate document the type and calibration method, names the standards used and their traceability, descriptions of the ambient conditions and the results of the calibrations.

A complete description of the calibration results includes the measured variable, the measured value and the measured uncertainty and the total measurement uncertainty. Supplementary statements about the conformity (maintaining the tolerances) can be included.

A DKD calibration can be recognized by:

DKD-Logo (blue or black)

German Eagle (black)

DKD - Calibration Mark (red)

5092

DKD-K-05701

06-01

Laboratory Seal

The DKD calibration mark is also affixed to the calibrated object.

6.2.7 The German Calibration Service (DKD)

The German Calibration Service (DKD) is an association of calibration laboratories of industrial companies, research institutes, technical authorities, inspection and testing institutes. These laboratories are accredited and supervised by the Accreditation Body of the German Calibration Service (DKD). They calibrate measuring instruments and material measures for measurands and measurement ranges specified within the framework of accreditation. The DKD calibration certificates issued by these laboratories prove traceability to national standards as required by the “standards family” ISO 9000 and by ISO/IEC 17025.

The reason for the formation of the DKD in 1977 was an increased demand for traceable calibrations, which PTB could no longer satisfy, particularly in a timely manner.

The functions are distributed as follows:

Functions of the Accreditation Body:

- Accreditation and monitoring of calibration laboratories:
  Processing and decisions regarding accreditation requests; monitoring the accredited calibration laboratories; planning, conducting and evaluating round robin comparisons.
- Representing the German Calibration Service (DKD):
  Cooperation with board, technical committees and expert panels.
  Cooperation with committees of the German Accreditation Council (DAR), the European Cooperation for Accreditation (EA) and the International Laboratory Accreditation Cooperation (ILAC).
  Cooperation with national and international standards and control committees for measurement metrology.
- Implementation of new developments:
  Cooperation in the development of progressive, new monitoring instrumentation (virtual laboratory control; measuring and test equipment);
  Unified presentation of measurement uncertainties.

Functions of the DKD-Laboratories:

- The calibration laboratories calibrate order based measurement and test equipments.
- They prepare calibration certificates, which numerically document the results of the calibration.
- The calibration laboratories assume responsibility for any resultant damages which can be traced back the errors in the calibration.

6.2.8 DKD-Laboratories at ABB

The ABB factory in Alzenau, Germany has a DKD calibration laboratory, that was established for the calibration of temperature sensors and is registered under the approval number DKD-K-05701.

Fig. 6-6: View into the DKD calibration laboratory

DKD calibrations in a temperature range from -35...1200 °C (-31...2192 °F) can be conducted. Included are stirred liquid baths as well as tube ovens with compensation blocks. Naturally, water triple point cells are available. For low temperature requirements, the possibility of a DKD calibration using liquid Nitrogen (approx. -196 °C (-320.8 °F)) exists.

The most important capital is the experience of the technicians in the laboratory, who have access to many years of company know how in the field of temperature measurement technology.

The laboratory is accredited for calibrations of the following equipment:

- Measurement resistors with suitable extensions (Pt100 and other R_o nominal values according to DIN EN 60751)
- Resistance thermometers according to DIN EN 60751
- Thermocouples according to EN 60584 and DIN 43710 (or comparable international standards)
- Temperature sensor with connected transmitter
- Temperature sensor with direct indicator
- Entire measuring chain (sensors + transmitter + transmitter power supply + indicator).

The following table provides information regarding the smallest, achievable measurement uncertainties, with which the calibrations can be conducted.

Measured variable or calibration equipment	**Measuring range** °C (°F)	**Measuring conditions**	**Measurement uncertainty**	**Comments**
Temperature resistance thermometers	0.010 (32.018)	Water triple point cell	5 mK	Triple point of water
	-196 (-320.8)	Boiling point of liquid Nitrogen (LN$_2$)	100 mK	Comparison against standard resistance thermometer
	-35...180 (-31...356)	Stirred thermostatic liquid bath	20 mK	
	180...350 (356...662)		20 mK	
	350...500 (662...932)		50 mK	
Precious metal thermocouples	-35...500 (-31...932)		0.5 K	
Base metal thermocouples	400...500 (752...932) 200...400 (392...752) 0...200 (32...392)		1.0 K 0.4 K 0.2 K	
Resistance thermometers	500...850 (932...1562)	Measurement in tube oven (calibration in Na-heat tube in a range 550...1000 °C (1022...1832 °F))	1.0 K	Comparison measurement against thermocouple Type S
Precious metal thermocouples	500...1000 (932...1832)		1.0 K	
	1000...1200 (1832...2192)		1.5 K	
Base metal thermocouples	500...1000 (932...1832)	Measurement in tube oven (calibration in Na-heat tube in a range 550...1000 °C (1022...18320 °F))	2.0 K	Comparison measurement against thermocouple Type S
	1000...1200 (1832...2192)		3.0	
Precious metal thermocouples with a wire design ($d_{max} \leq 1$ mm)	1554 (2829)	Fixed point calibration at the temperature of molten Palladium	2.5 K	Melting method
Contacting surface thermometers (resistance thermometers and thermocouples)	50...500 (122...932)	Calibration fixture for surface thermometers	0.008 K· t/°C	Method of the Ilmenau Inst. with individual test body t = temp. in °C
Transmitter with connected resistance thermometer	-35...850 (-31...1562)	Such as resistance thermometers	U_{prt} + 0.1 K	U_{prt} and U_{Te} are the expanded measurement uncertainties for resistance thermometers or thermocouples
Transmitter with connected thermocouple	-35...1200 (-31...2192)	Such as thermocouples	U_{Te} + 0.1 K	

Tbl. 6-3: Accreditation scope

6.2.9 Conducting a Calibration

A resistance thermometer calibration will be used as an example to describe the actual steps required by the calibration specifications.

If the aging characteristic of the test object are unknown, then it is checked first. The resistance of the test object is measured at the water triple point. The test object is held at a temperature 10...20 K above the highest calibration temperature for several hours. After it is cooled in air, the resistance at the water triple point is measured again. If differences are observed, which are below a specific stability limit (max. 1 mK for comparison standard resistance thermometers, approx. 20-30 mK for industrial resistance thermometers), then the actual calibration may be conducted on the test object. If the differences are greater than the specified limits, the complete cycle, heating, cooling and measuring of the resistance at the water triple point are repeated a number of times (approx. 3...5 times). The differences of the resistance value must tend towards zero. Thermometers, that do not meet the stability criteria after the aging procedures have been conducted, are not, or are only calibrated for a reduced accuracy classification.

For the actual calibration, the test object is installed in the calibration thermostats together with the appropriate comparison standard, so that their measuring tips (temperature sensitive lengths) are as close together as possible in the middle of the calibration area. After a temperature equilibrium has become established between the test objects and the bath, the measured values are recorded. For precision calibrations, the measurements are made using an AC bridge. This method is advantageous because it operates by matching the resistances to those of the external comparison standards, where the best resolution of the instrument occurs, and also because the parasitic thermal voltages in the measuring circuit are compensated when using an AC current.

The measured values of the test objects and the comparison standards are measured cyclically. The switching between the measuring channels is made using a low thermal voltage meter location selector switch. For each measuring channel, a continuos average value is calculated over a defined number of measurements and a standard deviation calculated. If the standard deviations for all the measured channels is less than a defined stability criterion, then the measurements values are accepted as the calibration values. This procedure is repeated at each of the calibration temperatures. For onsite calibrations (inspections) an additional comparison standard resistance thermometer with know resistance values can be incorporated into the complete measurement setup.

6.2.10 User Advantages offered by the DKD

DKD calibration certificates are recognized by all important industrial countries. This fact, from the viewpoint of a global market place, is gaining in importance for exporting countries. Also, the DKD certificates are recognized as unconditional evidence that the calibrations were conducted with instrumentation subject to quality audit monitoring. This applies not only to the audits based on the standard family DIN EN ISO 9000 but also to the audits specified in other standards, for example, KTA 1401, AQAP 4a, MIL-Standard, ASME VDA, QS9000 etc.

With accreditation by the Accreditation Body of the DKD the correctness of the calibration results is assured. DKD calibration certificates provide completely recognized evidence for legal relief in cases of product liability. The allowed measurement uncertainties ascribed to the laboratory must have been certified by measurements (calibrations of unknown thermometers) within the framework of the accreditation by the Accreditation Body.

The systematic measurement instrumentation calibrations in conjunction with an accredited DKD calibration laboratory assures the user, among others:

- higher measurement accuracies,
- better reproducibility,
- possibility for precise setting of the process parameters (higher process output, reduction of defective product),
- preventing process down time,
- reducing interruptions.

The calibration of measuring equipment by an approved DKD calibration laboratory is not a luxury, which one utilizes in conjunction with Quality-Management-System, but provides the user with tangible financial advantages.

Summary:

Use of a correctly calibrated temperature sensor means reducing defects! Every lot, every batch, every oven charge can only be used in a restricted manner if the calibrations are conducted using faulty measuring equipment. This costs money and increases losses.

Recommendations for Recalibration Intervals for Temperature Sensors

Temperature sensor type	Ambient atmospheric conditions	Temperature changes	Special conditions	Design	Maximum operating temperature °C (°F)	Guidelines for recalibration intervals (months)
Resistance thermometer according to EN 60751 **(wire wound measuring resistors)**	Reducing, inert or oxidizing	**No** extreme temperature change stresses	**No** vibration stresses	Metallic or ceramic thermowell	200 (392)	24
					420 (788)	12
				In metallic thermowell	660 (1220)	6
					850 (1562)	3
				In ceramic thermowell	660 (1220)	9
					850 (1562)	6
			Vibration stresses	Metallic or ceramic thermowell	200 (392)	12...15
					420 (788)	12
				In metallic thermowell	660 (1220)	9
					850 (1562)	3
				In ceramic thermowell	660 (1220)	6...9
					850 (1562)	6
		Strong or extreme temperature change stresses (temperature-shock)	**No** vibration stresses	metallic or ceramic thermowell	200 (392)	18
					420 (788)	12
				In metallic thermowell	660 (1220)	6
					850 (1562)	3
				In ceramic thermowell	660 (1220)	6
					850 (1562)	3
			Vibration stresses	Metallic or ceramic thermowell	200 (392)	12
					420 (788)	9...12
				In metallic thermowell	660 (1220)	6
					850 (1562)	3
				In ceramic thermowell	660 (1220)	6
					850 (1562)	3

Important Information:
The listed time intervals are only recommendations. Dependent on the installation conditions (temperature changes, vibration stresses etc.) and the design of the temperature sensor, recalibrations may be required at other time intervals.

Temperature sensor type	Ambient atmospheric conditions	Temperature changes	Special conditions	Design	Maximum operating temperature °C (°F)	Guidelines for recalibration intervals (months)
Resistance thermometers according to EN 60751 **(film measuring resistors)**	Reducing, inert or oxidizing	**No** extreme temperature change stresses	**No** vibration stresses	Metallic or ceramic thermowell	200 (392)	18
					420 (788)	9
				In metallic thermowell	660 (1220)	3...6
				In ceramic thermowell	660 (1220)	6
			Vibration stresses	Metallic or ceramic thermowell	200 (392)	12
					420 (788)	9
				In metallic thermowell	660 (1220)	6
				In ceramic thermowell	660 (1220)	6
		Strong or extreme temperature change stresses (temperature-shock)	**No** vibration stresses	Metallic or ceramic thermowell	200 (392)	15
					420 (788)	9...12
				In metallic thermowell	660 (1220)	3...6
				In ceramic thermowell	660 (1220)	3...6
			Vibration stresses	Metallic or ceramic thermowell	200 (392) 420 (788)	12 9
				In metallic thermowell	660 (1220)	6
				In ceramic thermowell	660 (1220)	3...6

Important Information:
The listed time intervals are only recommendations. Dependent on the installation conditions (temperature changes, vibration stresses etc.) and the design of the temperature sensor, recalibrations may be required at other time intervals.

Temperature sensor type	Ambient atmospheric conditions	Design	Maximum operating temperature °C (°F)	Guidelines for recalibration intervals (months)
Precious metal thermocouples according to EN 60584 (Type S (Pt10%Rh-Pt) Type R (Pt13%Rh-Pt))	Reducing, inert or oxidizing	Metallic or ceramic thermowell	800 (1472)	24
		In metallic thermowell	1000 (1832)	12
			1250 (2282)	6...8
		In ceramic thermowell	1000 (1832)	18
			1250 (2282)	12
Base metal thermocouples according to EN 60584 (Type K (NiCr-Ni) Type N (NiCrSi-NiSi))		Metallic or ceramic thermowell	700 (1292)	24
		In metallic thermowell	1000 (1832)	12
			1150 (2102)	6
		In ceramic thermowell	1000 (1832)	18
			1150 (2102)	9...12
Base metal thermocouples according to EN 60584 (Type J (Fe-CuNi))		Metallic or ceramic thermowell	700 (1292)	12...15
		In metallic thermowell	1000 (1832)	6
			1150 (2102)	1)
		In ceramic thermowell	1000 (1832)	9...12
			1150 (2102)	1)

Important Information:
The listed time intervals are only recommendations. Dependent on the installation conditions (temperature changes, vibration stresses etc.) and the design of the temperature sensor, recalibrations may be required at other time intervals.

6.3 Quality Assurance Measures

Temperature sensors cannot always be brought into contact with the objects to be measured without special precautions. Generally, special measures are required to prevent exposure of the sensor to excessive mechanical forces, pressure, impact, erosion or vibration and to protect it from chemical attack. In addition, errors due to shunt currents or external voltages must be avoided. The temperature sensor is enclosed by protective materials (connection head, extension tube, thermowell with threaded or flanged connections), that more or less resist the impact of chemical and mechanical forces. The medium contacting parts, such as the thermowells, must especially be considered.

In the following, the important measures are described. Detailed measures and requirements should be discussed with the suppliers of the temperature sensors. Leading manufacturers have experts available and approvals for quality assuring measures.

Confirmation Steps for Special Applications

The applicable German and European regulations, the user and the design specification require an evaluation of the components. The goal of these evaluations and tests is to prove the quality of the instrument, the safety of its materials and connection joints, and to detect weak spots in the welds of the components.

Requirements and designs for temperature sensors are defined by the specifications in the regulations. At the very top of the hierarchy are the regulations in the European Pressure Equipment Directive 97/23/EC (AD2000). It has been mandatory since May 2002.

Thermowells with threaded and flanged connections or welded thermowells etc. must meet the requirements in the Pressure Equipment Directive 97/23/EC (AD2000). For these components the directive requires a Certificate of Compliance, see also NAMUR-Recommendation NE80.

Regulations – System Based Qualifications

AD Specification Sheet HP 0/TRD201
details the general fundamentals for the design, manufacture and testing of pressure vessels and pressure vessel parts (e. g. thermowells). The manufacturer of pressure vessels or pressure vessel parts must have a HP 0/TRD 201 approval.

EN 10 204:20004
Metallic products, types of test certificates

DIN 55 350-18
Concepts for certifying the results of quality tests, quality test certificates

ZFP – Personnel
Qualification and continued training of ZFP-Personnel relative to test technology for non-destructive testing and radiation protection

Welder tests
according to EN 287-1, DGRL 97/23/EG and TRD 201 / AD 2000 HP3

Welding procedure tests
according to AD2000-HP 5/2

Specifications – Product Based Qualifications

In addition to the general regulations in the national and international standards a number of institutions have issued regulations applicable for special sectors and application conditions relative to product and design approvals.

Some examples:

PTB	German Institute of Technology and Science Type test examinations (Ex-Protection) and official monitoring of the measurements (comparison standards)
DKD	German Calibration Service is the accreditation body for inspecting the DKD laboratories
EXAM	Mine Experimental Test Section Dortmund-Derne, Germany type test examinations for explosion protection
VDA	German Association of the automotive industry
KTA	1401 Nuclear plants

Maritime Approval Associations

GL	Germanic Lloyd
LRS	Lloyds Register of Shipping
DNV	Norske Veritas (Norwegian)
BV	Bureau Veritas
NK	Nippon Kaiji Kyokai (Japanese)
ABS	American Bureau of Shipping

Special Tests (Non-Destructive and Metrological Tests)

Mechanical Tests:

- *Vibration tests* according to customer and design specifications
  e. g. for type test examinations with simulated earthquakes and airplane crashes for installations in nuclear power plants, determination of the resonance points for installation in flows with vortex shedding, type tests at the resonance points within prescribed frequency ranges for shipboard sensor approvals.
- *Radiographic testing* with max. 200 KV output according to DIN 54111 Part 1, Testing Metallic Materials with Roentgen and Gamma Rays. The Roentgen tests are designed to detect porosities, voids, cracks, etc. in the basic material and/or the weld seam. The evaluation of the test results for fusion welds in pressure vessels and pressure containing parts is made according to the AD-Specification Sheets HP 5/3 and/or EN 25817. The regulations define the criteria for acceptance of defects.
- *Pressure tests* using gas (up to 200 bar) and water (up to 3000 bar). The external and internal pressure tests are used to confirm the strength and impermeability of the thermowells and process connections.
- *Seal tests* using Helium leak test with a leak rate of 1 x 10^{-9} mbar x 1 x s^{-1}, e. g. for ceramic feedthrus. Defects are detected using a leak detector, sniffer probe, measuring the pressure drop or drop formation.
- *Surface crack detection* using fluorescent or dye penetrants according to AD-Specification Sheet HP 5/3
- *Hardness test* according to Vickers (HV) and Rockwell (HRC) as well as Shore A for elastomers

Electrical Tests:

- *DKD-calibrations* from -40...1200 °C (-40...2192 °F), plus the ability to calibrate using liquid Nitrogen (-195.8 °C (-320.44 °F)) or Palladium at its melting point (1554 °C (2829.2 °F)).
- *Factory calibrations* from -195.806 (N_2) °C (-320.451 °F) to 1554 (Pd) °C (2829.2 °F)
- *Response time measurements* in water at v = 0.6 m/s and in air at v = 3.0 m/s
- *Insulation test* to max. 3000 V AC

Test Certifications

- ***According to DIN EN 10 204***
  Certificates specified in this standard, as a rule, define the material traceability for chemical and physical properties, but can also confirm the properties through tests (e. g. impermeability of pressure strength, temperature tests).
- *Test Report 2.1*
  Certification by the manufacturer, that the delivered products are in accord with the specifications in the order, without information regarding the test results.
- *Test Report 2.2*
  Certification by the manufacture of the non-specific (not specified in the order) test results. Tests can be conducted by production personnel (non-specific tests).
- *Inspection Certificate 3.1*
  Certification of the materials and their testing per the customer specifications or legal regulations by factory specialists, who are designated by the malefactors and are independent of the production department.
- *Inspection Certificate 3.2*
  Certification by an inspector, who is independent of the production department, designated by the manufacturer and an inspector commissioned by the customer or an inspector named in the legal regulations of the results from the specific tests.
- ***According to DIN 55350 Part 18***
  Quality test certificates in accord with this standard confirm all possible quality criteria based on the tests and measurements conducted. Only the most common certificates are described below.
- *Quality Test Certificate DIN 55350-18-4.1.1*
  Manufacturer certificate O, without information regarding the test results for non-specific (not specified in the order) tests, e. g. batch values or spot tests, prepared by test personnel designated by the manufacturer (factory specialists).

- *Quality Test Certificate DIN 55350-18-4.1.2*
  Manufacturer certificate O, without information regarding the test results for specific (specified in the order) tests, e. g. batch values or spot tests, prepared by test personnel designated by the manufacturer (factory specialists).
- *Quality Test Certificate DIN 55350-18-4.2.1*
  Manufacturer certificate O without information regarding the test results for specific (specified in the order) tests, prepared by test personnel designated by the manufacturer (factory specialists).
- *Quality Test Certificate DIN 55350-18-4.2.2*
  Manufacturer certificate M with information regarding the test results for specific (specified in the order) tests, prepared by test personnel designated by the manufacturer (factory specialists).

Information: For all test certificates according to DIN 55350 Part 18 the scope of the test is to defined ahead of time.

Additional Certifications

- *Manufacturer Declaration*
  Certificate of Compliance by the manufacturer for simple electrical equipment according to EN 50020 Par. 5.4 for intrinsically safe measuring circuits including specifications for the corresponding conditions.
- *DKD-Certificate*
  Calibration certificate for temperature sensors, which can only be prepared by designated personnel in accredited DKD-Laboratories (Calibration Laboratories according to DIN EN ISO/IEC 17025). Tests may only be conducted within the accredited range for the specific instruments and comparison standards.

Materials and Procedures

They correspond to the specific, valid international standards, such as e. g. DIN, BS, ASTM, etc. They are also delivered to the customer based on special test and inspection specifications (DIN EN 10204:2005). The inspections can be conducted by the customer, by an independent inspection organization (TÜV, LRS, DNV etc.) or by an independent factory specialist. A very comprehensive quality assurance system exists to assure compliance with the international standards.

7 Explosion Protection

7.1 Introduction

The explosion protection is regulated worldwide by country specific standards. The global ABB sales products satisfy these requirements with minor product variations, which are necessary to satisfy the particular national requirements for explosion protection. This means: the same basic design with approvals for various countries. Using this approach, minor product variations for worldwide marketing, the user can install the same product worldwide. This strategy leads to cost reductions on the customer's part, e.g. training, planning and maintenance of these products.

	European Union	**USA**	**Canada**	**Russia**	**Ukraine**	**Australia**
Regulations/ Standard/ Approval Agency	ATEX – PTB – EXAM BBG – KEMA – TÜV North – ZELM – IBExU...	FM EX Approval UL EX Approval	CSA Certificate	GOST Russia	GOST Ukraine	IECEX
Validity	No restrictions	No restrictions	No restrictions	Approx. 5 years	Approx. 5 years	No restrictions
Production Monitoring/ Audits	Yes	Yes	Yes	No	No	Yes

Tbl. 7-1: Overview of the more important country specific standards, approvals and approval agencies

At their core, the requirements for the approvals are very similar and have a common goal, that, based on the present state of the technology, an explosion cannot occur in a system, in which instrumentation was used which was designed in accord with the national requirements for explosion protection.

7.2 Terms and Definitions

Explosion

Explosion means an exothermic reaction of a material which occurs at a high reaction rate. This requires the presence of an explosive mixture/atmosphere and an ignition source, as well as external impetus to initiate the explosion.

Explosion hazard

Explosion hazard means the presence of an explosive mixture/atmosphere, without ignition occurring from an ignition source from an external impetus.

Explosive gas atmosphere

Mixture with air, under atmospheric conditions, of flammable substances in the form of gas or vapour, in which, after ignition, permits self-sustaining flame propagation.

Explosion limits

The lower (LEL) and upper (UEL) explosion limit defines the range of a mixture in which it is explosive. The limits can be found in the appropriate literature for the particular materials.

Explosion groups according to EN-standards

The ignition and ignition penetration characteristics of an explosive mixture are typical material properties. These specifications are especially important in the design of equipments. For Intrinsic Safety electrical equipments the ignition energy is the criterion for the ignitability. The smaller the required ignition energy, the more dangerous is the mixture. The ignition penetration characteristics provides information relative to the flame path width and length limits for the equipments with flameproof enclosure.

Explosion Group	Ignition Energy	Test Gas	Area
I	< 200 µJ1)	Methane in air	Firedamp protection (Mining)
II A II B II C	< 160 µJ1) < 60 µJ1) < 20 µJ1)	Propane in air Ethylene in air Hydrogen in air	Explosion protection
	1) Doubling of the energy values is permissible, when the charging voltage < 200 V.		

Tbl. 7-2: Explosion groups according to the EN-standards

Gases and vapors are classified by the criteria listed below. The table ranks a number of materials. The equipment to be used for these materials must be qualified accordingly.

Explosion Group	Ignition Temperature					
	T1	T2	T3	T4	T5	T6
I	Methane					
II A	Acetone Ethane Ethyl acetate Ammonia Benzine (pure) Acetic acid Methanol Propane Toluene	Ethyl alcohol i-Amylacetate n-Butane n-Butyl alcohol	Benzine Diesel fuel Aircraft fuel Heating oil n-Hexane	Acetaldehyde Ethyl ether		
II B	Carbon monoxide	Ethylene	Sulphurdi-Hydrogen	Ethyl ether Butyl ether		
II C	Hydrogen	Acetylene				Carbon disulphide

Tbl. 7-3: Material rankings according to explosion group

Flash Point
Is the lowest temperature at which the liquid under test, under defined conditions, produces vapors in a quantity sufficient to form a flammable mixture above the liquid surface when combined with air.

Ignition Energy
The minimum ignition energy is the energy contained in a spark which is sufficient to ignite the surrounding explosive atmosphere.

Ignition Temperature according to EN-standards
The ignition temperature of a flammable material is the lowest temperature, determined in a test instrument with a heated wall, at which the mixture of a flammable material mixed with just ignites.

The ignition temperatures of liquids and gases are determined by the procedures described in DIN 51794. For determining the ignition temperature of flammable dust, no standardized procedures exist at this time. There are a number of procedures listed in In the relevant literature.

The flammable gases and vapors of flammable liquids are classified in Temperature Classes by their ignition temperatures, and equipment by its surface temperature.

Temperature Class	Maximum allowable surface temperature of the equipment in °C (°F)	Ignition temperatures of the flammable materials in °C (°F)
T1	450 (842)	> 450 (842) ...
T2	300 (572)	> 300 (572) ≤ 450 (842)
T3	200 (392)	> 200 (392) ≤ 300 (572)
T4	135 (275)	> 135 (275) ≤ 200 (392)
T5	100 (212)	> 100 (212) ≤ 135 (275)
T6	85 (185)	> 85 (185) ≤ 100 (212)

Tbl. 7-4: Temperature classes

Ignition Sources

The following list showes some of the common ignition sources found in applications:

- hot surfaces (heaters, hot equipment, etc.),
- flames and hot gases (from fires),
- mechanically produced sparks (by rubbing, impact and grinding processes),
- arcs from electrical equipment,
- compensation currents,
- static electricity,
- lightning, ultrasonic,
- optic ignition sources,
- electric fields from radio waves,
- ...

Primary and Secondary Explosion Protection

When preventing explosions the terms primary and secondary explosions are used.

The *primary explosion protection* is based on preventing the formation of a dangerous explosive atmosphere, i.e.:

- avoiding flammable liquids and gases,
- increasing the flash point,
- prevention of an explosive mixture by concentration limitations,
- ventilation or open area installations,
- concentration monitoring with emergency shut down procedures.

The *secondary explosion protection* encompasses all measures which prevent or avoid the ignition of a hazardous atmosphere, i.e.:

- No active ignition source
  - Intrinsically safe equipment
  - Encapsulating the ignition source to prevent external ignition
    Powder filled
    Flameproof
    Pressurized

Area/zones categories according to EN standard

Hazardous areas are classified into zones based upon the frequency of the occurrence and duration of an explosive atmosphere, as follows:

For Gases, Vapors and Mists (EN 60079-10)

Zone 0: A place in which an explosive atmosphere consisting of a mixture with air of flammable substances in the form of gas, vapour or mist is *present continuously or for long periods or frequently.*
Category: 1 G

Zone 1: A place in which an explosive atmosphere consisting of a mixture with air of flammable substances in the form of gas, vapour or mist is likely *to occur in normal operation occasionally.*
Category: 2 G

Zone 2: A place in which an explosive atmosphere consisting of a mixture with air of flammable substances in the form of gas, vapour or mist is not likely to occur in normal operation but, if it does occur, *will persist for a short period only.*
Category: 3 G

For Dust (EN 61241-10)

Zone 20: A place in which an explosive atmosphere in the form of a cloud of combustable dust in air is present continously, or for long periods or frequently.
Category: 1 D

Zone 21: A place in which an explosive atmosphere in the form of a cloud of combustible dust in air is likely to occur in normal operation occasionally.
Category: 2 D

Zone 22: A place in which an explosive atmosphere in the form of a cloud of combustible dust in air is not likely to occur in normal operation but, if it does occur, will persist for a short period only.
Category: 3 D

Comments:
Coatings, deposits and settling of flammable dust, as well as every other cause, must be considered because they can lead to the formation of a hazardous, explosive atmosphere.

The status for normal operation is defined as operation within the design parameters for the system.

Apparatus for Category 1G/1D, Instrument Group II

Categories 1G (gas) and 1D (dust) include apparatus, that is designed so that it can be operated to correctly measure the variables required by the user and provide a very high degree of safety.

Apparatus for these categories are suitable for use in Zone 0 (1G apparatus) and in Zone 20 (1D apparatus). Apparatus in these categories must, even for rarely occurring instrument faults, assure that the required degree of safety exists and therefore must include explosion protection measures so that

- even if one type of protection fails, at least the other type of protection assure the required safety,
  or
- if two types of protection fails the required safety is assured.

The apparatus in this category must also comply with the extensive requirements in Annex II, Number 2.1 of the EU-Directive 94/9/EG.

Apparatus for Category 2G/2D, Instrument Group II

Categories 2G (gas) and 2D (dust) include apparatus, that is designed so that it can be operated to correctly measure the variables required by the user and provide basic degree of safety.

Apparatus for these categories is suitable for use in Zone 1 (2G apparatus) and in Zone 21 (2D apparatus). The explosion protection measures for this category assures that even during frequent instrument failures or fault conditions, which can usually be expected, the required degree of safety is assured.

Apparatus for Category 3G/3D, Instrument Group II

Categories 3G and/or 3D include apparatus, that is designed so that it can be operated to correctly measure the variables required by the user and provide basic degree of safety.

Apparatus for these categories is suitable for use in Zone 2 (3G apparatus) and in Zone 22 (3D apparatus) for a short period of time. Apparatus for the category assures the required degree of safety during normal operation.

DIV Categories according to NEC500 (USA) and CEC Annex J (Canada)

In addition to the categories Zone 0 and Zone 1 for European instrumentation for explosion hazardous areas, there are Division categories defined in NEC500 and CEC Annex J. The following table provides an overview of the Zones and Divisions.

IEC / EU	Zone 0	Zone 1	Zone 2
US NEC505	Zone 0	Zone 1	Zone 2
US NEC500	Division 1		Division 2
CA CEC Section 18	Zone 0	Zone 1	Zone 2
CA CEC Annex J	Division 1		Division 2

Tbl. 7-5: Comparison of Zone and Division Classifications

IEC Classifications according to IEC 60079-10
EU Classifications according to EN60079-10
US Classifications according to ANSI/NF PA70 National Electrical Code Article 500 and/or 505
CA Classifications according to CSA C22.1 Canadian Electrical Code (CEC) Section 18 and/or Annex J

Explosion Groups according to NEC500 (USA) and CEC Annex J (Canada)

Explosion groups US NEC500 CA CEC Annex J	Explosion groups US NEC505 CA CEC section 18 EU IEC	Test gas	Area
Mining	I	Methane	Firedamp protection (Mining)
Class I Group D Class I Group C Class I Group A Class I Group B	II A II B II C II B + Hydrogen	Propane Ethylene Acetylene Hydrogen	Explosion protection

Tbl. 7-6: Explosion groups according to US/CA-standards

Temperature Classes according to NEC500 (USA) and CEC Annex J (Canada)

Max. surface temperatures	US NEC505 CA CEC section 18 EU IEC	US NEC 500 CA CEC Annex J
450 °C (842 °F)	T1	T1
300 °C (572 °F)	T2	T2
280 °C (536 °F)		T2A
260 °C (500 °F)		T2B
230 °C (466 °F)		T2C
215 °C (419 °F)		T2D
200 °C (392 °F)	T3	T3
180 °C (356 °F)		T3A
165 °C (329 °F)		T3B
160 °C (320 °F)		T3C
135 °C (275 °F)	T4	T4
120 °C (248 °F)		T4A
100 °C (212 °F)	T5	T5
85 °C (185 °F)	T6	T6

Tbl. 7-7: Temperature classes according to US/CA-standards

7.3 Types of Protection in Europe and in North America

Ignition Type “Intrinsic Safety - Ex i“ according to EN 50020 or EN 60079-11

Type of protection based on the restriction of electrical energy within apparatus and of interconnecting wiring exposed to the potentially explosive atmosphere to a level below that which can cause ignition by either sparking or heating effects.

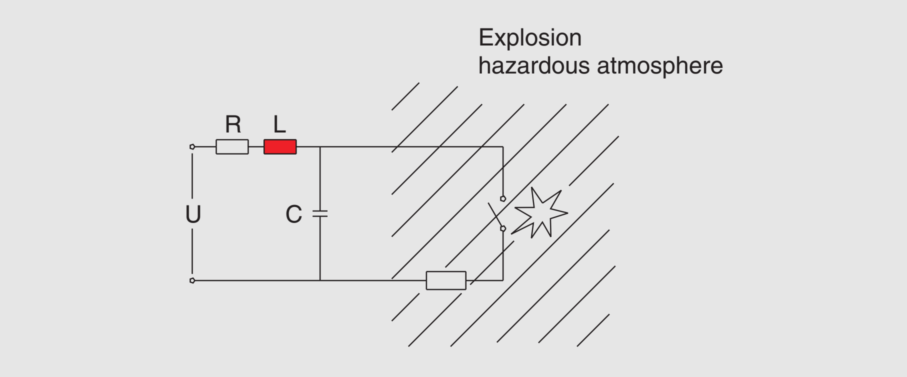

Fig. 7-1: Intrinsic safety schematic

There are two categories of Intrinsic Safety.

Category "ia" for installations in Zone 0:
The instruments must be designed so that during a fault condition or during all possible combinations of two fault conditions, ignition is impossible.

Category "ib" for installations in Zone 1:
The instruments must be designed so that during one fault condition ignition is impossible.

Ignition Protection Type “Flameproof Enclosure Ex - d“ according to EN 50018 or EN 60079-1

Enclosure in which the parts which can ignite an explosive atmosphere are placed and which can withstand the pressure developed during an internal explosion of an explosive mixture, and which prevents the transmission of the explosion to the explosive atmosphere surrounding the enclosure.

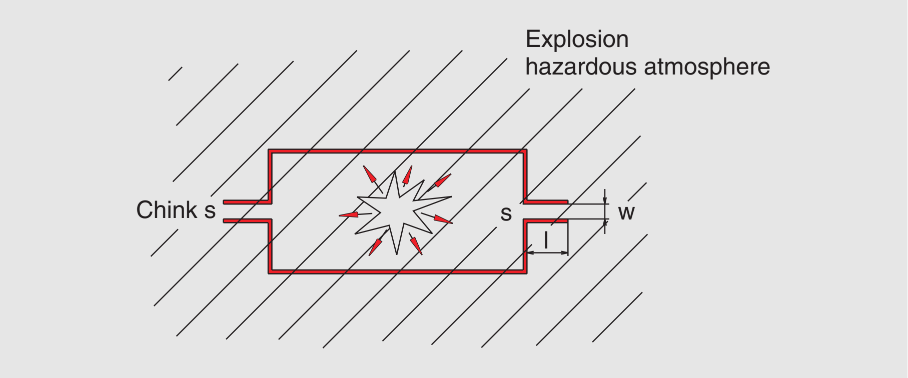

Fig. 7-2: Flameproof enclosure schematic

Ignition Protection Type “Increased Safety Ex e“ according to EN 50019 or EN 60079-7

Type of protection applied to electrical apparatus in which additional measures are applied so as to give increased security against the possibility of excessive temperatures and of the occurrence of arcs and sparks in normal service or under specified abnormal conditions.

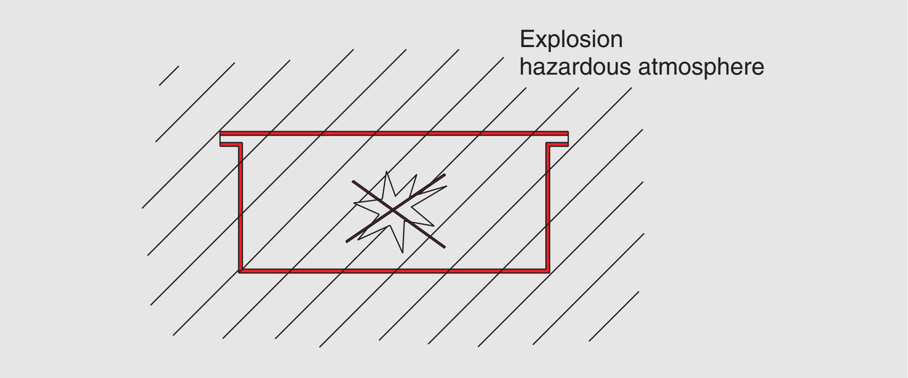

Fig. 7-3: Increased safety schematic

Ignition Protection Type “Potted Encapsulation Ex m“ according to EN 50028 or EN 60079-18

Type of protection whereby parts that are capable of igniting an explosive atmosphere by either sparking or heating are enclosed in a compound in such a way that the explosive atmosphere cannot be ignited under operating or installation conditions.

Fig. 7-4: Potted encapsulation schematic

Ignition Protection Type “Non-Sparking Equipment – n“ according to EN 50021 or EN 60079-15

Type of protection applied to electrical apparatus such that, in normal operation and in certain specified abnormal conditions, it is not capable of igniting a surrounding explosive gas atmosphere.

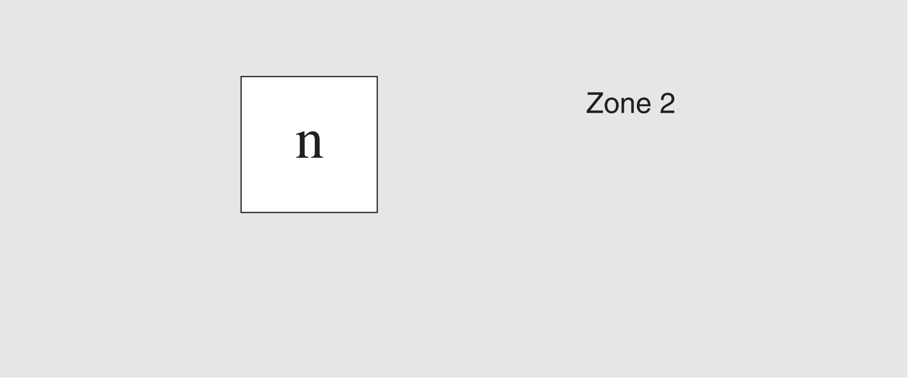

Fig. 7-5: Non-sparking electrical equipment schematic

Approvals according to FM Approval Standard Class Number 3610, 3611 and 3615

Temperature products from ABB satisfy, dependent on the specific certification and application area, one or more of the following FM standards:

- Intrinsically Safe Apparatus and Associated Apparatus for
  use in Class I, II, and III, Division 1, and Class I, Zone 0 and 1.
  Hazardous (Classified) Locations. Approval Standard Class Number 3610.
- Non-incendive Electrical Equipment for
  use in Class I and II, Division 2, and Class III, Divisions 1 and 2.
  Hazardous (Classified) Locations. Approval Standard Class Number 3611.
- Explosion proof Electrical Equipment General Requirements.
  Approval Standard Class Number 3615.

The corresponding operating instructions and control drawings are to be considered when installing the instrument. In addition, the requirements of the National Electrical Code (NEC) must be observed.

Approvals according to CSA-standards

Temperature products from ABB satisfy, dependent on the specific certification and application area, one or more of the following CSA standards.

- CAN/CSA-E60079-11:02 Electrical apparatus for explosive gas atmospheres - Part 11: Intrinsic safety "i"
  C22.2 No.213-M1987 (Reaffirmed 1999) Non-incendive Electrical Equipment for use in Class I, Division 2.
  Hazardous Locations.
- C22.2 No. 30-M1986 (Reaffirmed 1999) Explosion-proof Enclosures
  for use in Class I.
  Hazardous Locations.

The corresponding operating instructions and control drawings are to be considered when installing the instrument. In addition the requirements of the Canadian Electrical Code (CEC) Part I (Safety Standard for Electrical Installation) must be observed.

Approvals according to GOST and other Approvals

The certifications according to these national standards are based on the EC-Type Examination Certificates and their associated test reports. Generally, additional tests are not required. The different agencies and institutes recognize the test reports. Some certificates however, have expiration limits, requiring increased efforts to maintain the certifications current for the products.

7.4 Marking of the Apparatus

Apparatus for use in **explosion hazardous areas** must be clearly marked by the manufacturer. The following marking according to EN 50014 or EN 60079-0/EN 50020 or EN 60079-11 are to be used:

- Name and address of the manufacturer
- CE-Mark
- Identification of the series and the type
- If applicable, the serial number
- Year of manufacture
- Special mark for preventing explosions, in conjunction with the mark which identifies the category
- For the Group II the letter “G“ (for explosive gas atmosphere) and/or the letter “D“ (for explosive dust atmosphere).

Up to three nameplates are used on the temperature products from ABB for identifying the required marks:

- Typeplate with the important information for the product
- Approval typeplate with all the applicable explosion marks
- Optional label for additional information.

Design and Content of Typeplates for Temperature Products from ABB

[Company Logo, Manufacturer]	[Product name]	[Country of manufacture] [Year of manufacture]
[Product name + Order Code]	[Order No.+ Item No.]	[Instr. Man. Logo] [CE Logo]
[Serial No.]		[HW-Revision]
[Technical Specifications U, I, P]		[SW-Revision]
[Transmitter CFG]		
[Sensor CFG]		
[Ambient temperature range, standard]		[Protection Class]

Information: The temperature specifications are only listed on the typeplate for non-Ex-versions.

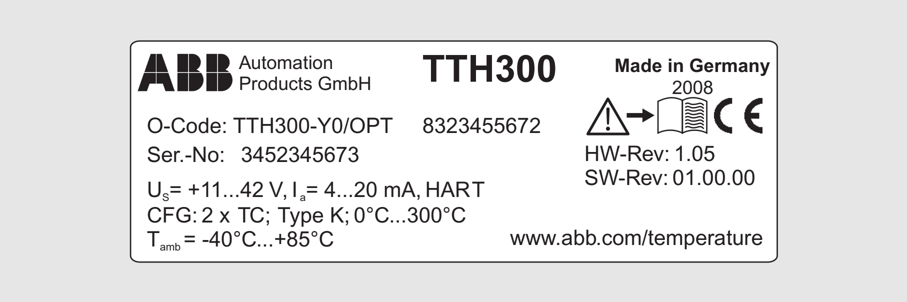

Automation Products GmbH

TTH300

Made in Germany
2008

O-Code: TTH300-Y0/OPT 8323455672

Ser.-No: 3452345673

HW-Rev: 1.05

SW-Rev: 01.00.00

U_S= +11...42 V, I_a= 4...20 mA, HART

CFG: 2 x TC; Type K; 0°C...300°C

T_{amb} = -40°C...+85°C

www.abb.com/temperature

Example: Temperature transmitter type TTH300

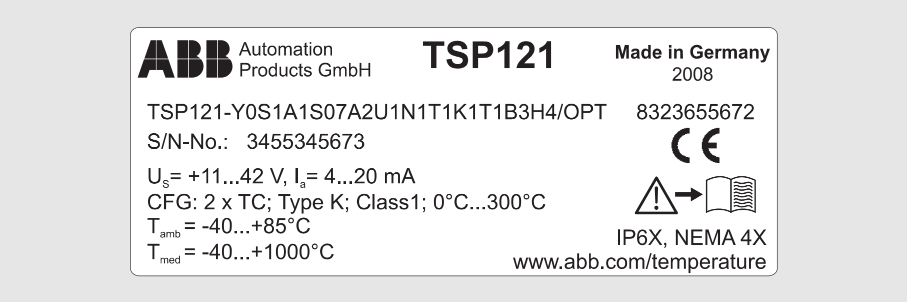

Automation Products GmbH

TSP121

Made in Germany
2008

TSP121-Y0S1A1S07A2U1N1T1K1T1B3H4/OPT 8323655672

S/N-No.: 3455345673

U_S= +11...42 V, I_a= 4...20 mA

CFG: 2 x TC; Type K; Class1; 0°C...300°C

T_{amb} = -40...+85°C

T_{med} = -40...+1000°C

IP6X, NEMA 4X

www.abb.com/temperature

Example: Temperature sensor type TSP121

Design and Content of an Approval Typeplate for Temperature Products from ABB

- Company Logo
- Manufacturer information
- Product name (+ Approval name, if different than product name)
- Approval specifications incl. Approval Logo
  - – ATEX EEx i; Approval specifications according to EC-Type Examination Certificate
  - – ATEX EEx d; Approval specifications according to EC-Type Examination Certificate
  - – ATEX EEx D; Dust Ex, Approval specifications according to EC-Type Examination Certificate
  - – FM; Approval specifications according to Certificate of compliance
  - – CSA; Approval specifications according to Certificate of compliance
  - – GOST; Approval specifications according to Certificate of compliance
- CE 0102 Logo with No. of the Test Agency for ATEX typeplates
- Allowed ambient temperatures

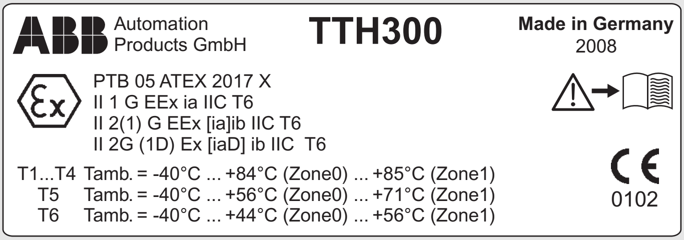

ABB Automation Products GmbH

TTH300

Made in Germany
2008

PTB 05 ATEX 2017 X
II 1 G EEx ia IIC T6
II 2(1) G EEx [ia]ib IIC T6
II 2G (1D) Ex [iaD] ib IIC T6

T1...T4 Tamb. = -40°C ... +84°C (Zone0) ... +85°C (Zone1)
T5 Tamb. = -40°C ... +56°C (Zone0) ... +71°C (Zone1)
T6 Tamb. = -40°C ... +44°C (Zone0) ... +56°C (Zone1)

CE
0102

Example: Temperature transmitter TTH300 in design EEX "i"

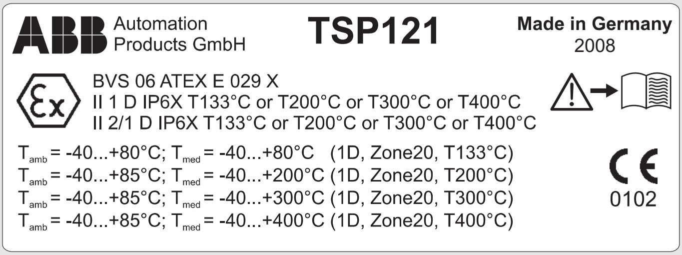

ABB Automation Products GmbH

TSP121

Made in Germany
2008

BVS 06 ATEX E 029 X
II 1 D IP6X T133°C or T200°C or T300°C or T400°C
II 2/1 D IP6X T133°C or T200°C or T300°C or T400°C

T_{amb} = -40...+80°C; T_{med} = -40...+80°C (1D, Zone20, T133°C)
T_{amb} = -40...+85°C; T_{med} = -40...+200°C (1D, Zone20, T200°C)
T_{amb} = -40...+85°C; T_{med} = -40...+300°C (1D, Zone20, T300°C)
T_{amb} = -40...+85°C; T_{med} = -40...+400°C (1D, Zone20, T400°C)

CE
0102

Example: Temperature sensor TSP121 in design Dust-EX

7.5 Evidence of the Intrinsic Safety

When interconnecting intrinsically safe circuits according to EN60079-14 an evidence of the Intrinsic Safety is to be maintained.

There are two categories:

1. Simple intrinsically safe circuit with only one active, associated and one passive intrinsically safe apparatus without additional power supply.
2. Multiple active apparatus, which during normal operation or during a fault condition can supply electric energy to the intrinsically safe circuit.

Simple Intrinsically Safe Circuits

They can be checked by an authorized person by comparing the electrical connection values from the respective EC-Type Examination Certificate.

The Intrinsic Safety of the connections is maintained, when the following conditions are satisfied:

Intrinsically safe equipment plus cable e.g. ABB-transmitter		**Associated equipment** e.g. transmitter power supplies/SPC input
U_i	$\geq$	U_o
I_i	$\geq$	I_o
P_i	$\geq$	P_o
$L_i + L_c$ (cable)	$\leq$	L_o
$C_i + C_c$ (cable)	$\leq$	C_o

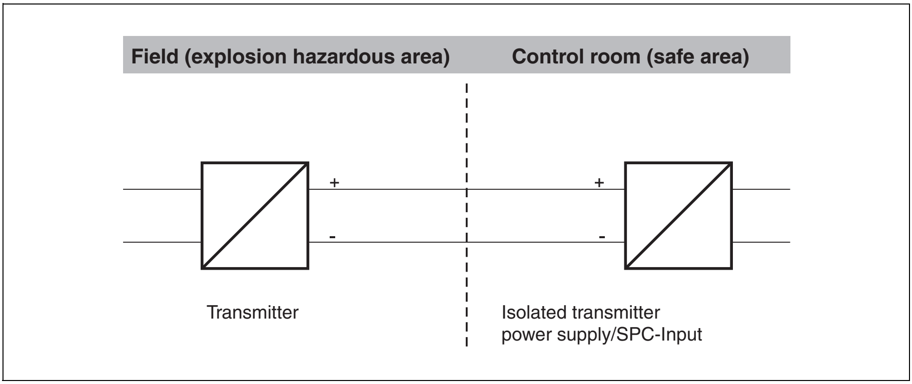

Fig. 7-6: Schematic of a simple intrinsically safe circuit

The verification should be clearly documented. In addition to the date and name of the tester, system specific documentation should be included, i.e., circuit description, terminal strips, cable routing, switch and terminal housings, etc.

Interconnection of Multiple Active Apparatus

This differs fundamentally from the previous case. For example, if the interconnection of multiple active, category “ia“ intrinsically safe circuits results in the combined circuit being classified as a category “ib“ circuit, then operation in Zone 0 is no longer possible.

A detailed explanation of this type of connection can be found in Annexes A and B of EN60079-14. Additionally, the ignition limit curves in EN 60079-11 or EN50020 will be required. See also EN 60079-25.

The advanced handling of this subject is usually the responsibility of qualified personnel and is not included in this handbook.

Connection of Intrinsically Safe Circuits with Non-Linear Curves

Here special procedures must be followed. They are described in detail in EN 60079-25.

The advanced handling of this subject is usually the responsibility of qualified personnel and is not included in this handbook.

8 SIL - Functional Safety in Process Automation

The standards IEC 61508 and IEC 61511 provide risk assessment methods for the design of safety loops. They define four safety levels, which describe the measures for risk assessment for the system elements. In order to determine the SIL-Level (Safety Integrity Level) of an instrument, all field instruments are subjected to rigorous test requirements and analysis by IEC.

The European Union sets the EU-Directive 96/82/EU (Sevesco II-Directive) as the legal basis for the operation of systems with hazard potentials. The implementation of the Directive 96/82/EU follows from the Incident Regulation in the Federal Imission Control Law (12.BlmSchV) dated 26 April 2000.

The Incident Regulation required reference, prior to the issuance of the safety relevant equipment, to DIN 19250 and 19251 until 31 July 2004, in which the requirement classes AK 1-8 are described. After 1 August, the Incident Regulation references DIN EN 61508 as well as DIN EN 61511, whose content corresponds to the Standards (IEC 61508/IEC 61511). They define four Safely Levels (SIL1 to SIL4), which define the risk assessment of system elements and from which the field instruments and actuators must be designed.

In order to estimate, if an instrument is satisfactory for a specific SIL-Level in the safety chain, the field instruments are tested and analyzed by an independent Institution.

In the FMEDA-Test (Failure Mode, Effect and Diagnosis) the hardware structure of the electronics is investigated. Together with the considerations of the (electro) mechanical components, the failure rate for the instrument, e.g. temperature transmitter can be determined. Essentially, the basic characteristics are utilized, which are calculated from the FMEDA: the Hardware Fault Tolerance (HFT), the percentage of safe failures (SFF Safe Failure Fraction) and the Probability of Failure on Demand (PFD).

The software development process of SIL certified temperature transmitters is defined in IEC 61508 which, in addition, utilizes the requirements in ICE 61511.

Additional general safety considerations for the field instruments are evaluated. In the SIL-Certificate of Compliance, which is issued by the manufacturer, in order to support the customers in the selection of suitable instruments for the safety circuits, the classifications are always based on the lowest SIL level.

To safely operate a system, an additional step is required by the IEC regulations which takes into account the entire safety circuit, consisting of the sensor/transmitter, controller and actuators, and assigns a SIL level. Before a safety circuit is designed and calculated, a SIL assessment is carried out, which is used to determine the required safety level for the safety circuit (e. g. SIL2). ABB offers a software program which can be used for all aspects of the system certification from a SIL assessment up to the design and calculation of the safety circuit according to IEC 61508. It also records and stores all decisions and basic calculations.

For operation, the safety circuits must also be regularly checked relative to their safety functions and the results recorded. For these checks, it is required that the test routines are defined, conducted and recorded. An expensive process, but which in the end is beneficial to humans and the environment. In addition to an extensive portfolio of instruments, ABB offers a software program, which manages and processes the data for statistical analysis for all the test routines and test results prescribed in IEC 61508.

9 Standards and Regulations for Temperature Measurements

The standardization of electrical thermometers is difficult because of their wide spread use in process measurement technology and the large variety of design types, but extremely important. The standardization of electrical thermometers is therefore primarily limited to the specification of:

- Basic values
- Electrical interfaces
- Mechanical interfaces (process connections)
- Special characteristics

For the process measurement sector, the creation of national standards for temperature sensors is the responsibility (in Germany) of Subcommittee 961.1 “Electrical Transmitters“ of the Committee 9.61 “Sensors and Devices“ in Department 9 “Control Technology“ associated with the German Electrical Commission (DKE). For very special applications other bodies are in part responsible.

Standards are prepared at the European (CENELEC) or international (IEC) level as well at other comparable bodies (see Tbl. 9-1).

International	European	National (Germany)
International Electrical Commission (IEC)	Technical Bureau (BT) CENELEC	German Electrical Commission (DKE)
Technical Committee (TC) 65: “Industrial Process Measurement and Control“	Reporting Secretariat For IEC TC 65	Department (FB) 9: “Process Control“
Subcommittee (SC) 65B: “Devices“	Working Group (BTWG) or Task Force (BTTF) (Project based)	Committee (K) 961: “Sensors and Devices“
Working Group (WG) 5: “Temperature Sensors“		Subcommittee (UK) 961.1: “Electr. Measuring Primaries“

Tbl. 9-1: Classification of national and international standards activities for temperature sensors

The most important national standard bodies for other countries:

USA	ANSI	American National Standards Institute
Canada	CSA	Canadian Standards Association
France	NF	Normalisation Francaise
Gr. Britain	BSI	British Standards Institution
Japan	JIS	Japanese Industrial Standards
Russia	GOST	National Standards of the Russian Federation
Italy	UNI	Uniticazione Nazionale Italiano

Standards Temperature Measurements:

EN 50112	Measurement, control, regulation – Electrical temperature sensors – Metal Thermowells for Thermocouples Assemblies
EN 50212	Connectors for Thermoelectric Sensors
New draft:	Draft proposal for DIN EN 50466 Straight Thermocouples with Metal or Ceramic Thermowells and Accessories To replace the following standards: DIN 43729 , DIN 43733, DIN 43734
EN 60751	Industrial Platinum Resistance Thermometers and Platinum Resistance Wires
New draft:	Draft proposal for DIN IEC 60751 2005, being voted on
EN 60584-1	Thermocouples Part 1: Reference Tables: Basic values for the thermal voltages
EN 60584-2	Thermocouples Part 2: Tolerances
New draft:	Draft proposal for DIN IEC 60584-3 Thermocouple Wires and Compensating Cables
EN 61152	Dimensions of Metal-Sheathed Thermometer Elements
EN 61515	Mineral Insulated Thermocouple Cables and sheathed Thermocouples
DIN 16160	Thermometers; Concepts
DIN 43710	Thermal Voltage and Materials for Thermocouples
DIN 43712	Thermal Wires for Thermocouples
DIN 43713	Wires and Stranded Wires for Compensation and Extension Cables
DIN 43714	Compensating Cables for Thermocouples
DIN 43720	Metal Thermowells for Thermocouples
DIN 43722	Thermocouples; Part 3: Thermocouple Wires and Compensating Cables; Tolerances and Identification System

DIN 43724	Measurement and Control; Electrical Temperature Sensors; Ceramic Thermowells and Holding Rings for Thermocouples
DIN 43725	Electrical Temperature Sensors; Thermocouple Insulating Tubes
DIN 43729	Measurement and Control; Electrical Temperature Sensors; Connection Heads for Thermocouples and Resistance Thermometers
DIN 43732	Measurement and Control; Electrical Temperature Sensors; Thermocouple Wires for Thermocouples
DIN 43733	Measurement and Control; Electrical Temperature Sensors; Straight Thermocouple without Exchangeable Measurement Insets
DIN 43734	Measurement and Control; Electrical Temperature Sensors; Stop Flanges for Thermocouples and Resistance Thermometers
DIN 43735	Measurement and Control; Electrical Temperature Sensors; Measurement Insets for Thermocouple Sensors
DIN 43762	Measurement and Control; Electrical Temperature Sensors; Measurement Insets for Resistance Thermometers
DIN 43764	Measurement and Control; Electrical Temperature Sensors; Straight Thermometers with Interchangeable Measurement Inset
DIN 43765	Measurement and Control; Electrical Temperature Sensors; Threaded Stem Thermometers with G 1/2 Mounting Threads
DIN 43766	Measurement and Control; Electrical Temperature Sensors; Threaded Stem Thermometers with G 1 Mounting Threads
DIN 43767	Measurement and Control; Electrical Temperature Sensors; Welded-Stem Thermometers
DIN 43769	Measurement and Control; Electrical Temperature Sensors; Thermometers not Fitted with Thermowells
DIN 43771	Measurement and Control; Electrical Temperature Sensors; Thermometers with Fast Response
DIN 43772	Control Technology - Thermowells and Extension Tubes for Liquid-in-Glass Thermometers, Dial Thermometers, Thermocouples and Resistance Thermometers - Dimensions, Materials, Testing
DIN 43772 Supplement 1	Control Technology - Thermowells and Extension Tubes for Liquid-in-Glass Thermometers, Dial Thermometers, Thermocouples and Resistance Thermometers - General Review - Assignment Thermowell/Temperatur Sensor
VDI/VDE 3511-1	Technical Temperature Measurements - Basics and Overview for Special Temperature Measurement Procedures
VDI/VDE 3511-2	Technical Temperature Measurements - Contacting Temperature Sensors
VDI/VDE 3511-3	Technical Temperature Measurements - Measuring Procedures and Measurement Processing for Electric Contacting Temperature Sensors

VDI/VDE 3511-4	Technical Temperature Measurements - Radiation Thermometry
VDI/VDE 3511-5	Technical Temperature Measurements - Installation of Temperature Sensors
VDI/VDE 3522	Time Performance of Contacting Temperature Sensors

Explosion Protection Standards, Safety Standards for Combustion Plants, Heat Quantity Measurements

EN 60079-10	Electrical Apparatus for Explosive Gas Atmospheres Part 10: Classification of Hazardous Areas
EN 60079-14	Electrical Apparatus for Explosive Gas Atmospheres Part 14: Electrical Installations in Hazardous Areas (Other than Mines)
EN 60079-17	Electrical Apparatus for Explosive Gas Atmospheres Part 17: Inspection and Maintenance of Electrical Installations in Hazardous Areas (other than mines)
EN 1434-1	Heat Meters - Part 1: General Requirements
EN 1434-2	Heat Meters - Part 2: Construction Requirements
EN 1434-3	Heat Meters - Part 3: Data Exchange and Interfaces
EN 1434-4	Heat Meters - Part 4: Type Approval Tests
EN 1434-5	Heat Meters - Part 5: Initial Verification Tests
EN 1434-6	Heat Meters - Part 6: Installation, Commissioning, Operational Monitoring and Maintenance
EN 14597	Temperature Control Devices and Temperature Limiters for Heat Generating Systems Replaces DIN 3440
DIN 3440	Temperature Control and Limiting Devices for Heat Generating Systems; Safety Requirements and Testing

International Standards

IEC 60584-1	Thermocouples - Part 1: Reference tables
IEC 60584-2	Thermocouples - Part 2: Tolerances
IEC 60584-3	Thermocouples - Part 3: Extension and Compensating Cables - Tolerances and identification system
IEC 60751	Industrial Platinum Resistance Thermometer Sensors
IEC 61152	Dimensions of Metal Sheathed Thermometer Elements
IEC 61515	Mineral Insulated Thermocouple Cables and Thermocouples

10 Appendix 1

Application conditions for thermowell materials			
Material	Max. Temp. no pressure °C (°F)	Advantages	Disadvantages
Metal thermowells			
1.0305	550 (1022)	Good resistance to reducing gases	Minimum resistance to oxidizers and acids
1.4301 (304)	800 (1472)	Heat and corrosion resistant	Minimum resistance to reducing flames and Sulphur
1.4306 (304L)	800 (1472)	Good resistance to grain boundary corrosion	
1.4401 (316)	800 (1472)	Good resistance to acids and alkalis	
1.4404 (316L)	800 (1472)	Good resistance to grain boundary corrosion	
1.4435 (316L)	800 (1472)	Good resistance to grain boundary corrosion	
1.4541 (321)	800 (1472)	Good resistance to grain boundary corrosion after welding	
1.4571 (316Ti)	800 (1472)	Good resistance especially to grain boundary corrosion	
1.4762 (446)	1200 (2192)	Good resistance to oxidizing and reducing flames, Sulphur containing gases	Minimum resistance to Nitrogen containing gases
1.4749 (446)	1150 (2102)	Good resistance to oxidizing and reducing flames, Sulphur containing gases, applications in salt baths and metal smelting	Minimum resistance to Nitrogen containing gases
1.4772	1250 (2282)	Use for Copper - brass smelting	
1.4821	1350 (2462)	Use for Salt Peter, Chloride and Cyanide containing salt baths	
1.4841 (314)	1150 (2102)	Good resistance to Nitrogen and Oxygen poor gases	Minimum resistance to Sulphur containing gases
1.4845 (310S)	1050 (1922)	Higher NiCr content, resistant to high temperature corrosion	
1.4876 (Incoloy)	1100 (2012)	Resistant to high temperature corrosion and thermal shock	
2.4360 (Monel)	600 (1112)	Good resistance to steam, high pressure and corrosion	
2.4665 (Hastelloy X)	1100 (2012)	Good resistance to oxidizing and carburizing atmospheres at high temperatures	

Application conditions for thermowell materials			
Material	Max. Temp. no pressure °C (°F)	Advantages	Disadvantages
2.4810 (Hastelloy B)	1100 (2012)	Good resistance to heat and corrosion, especially to HCl and H_2SO_4 attack	
2.4811 (Hastelloy C-276)	1100 (2012)	Good resistance to oxidizing and reducing atmospheres and to Cl_2 gas	
2.4816 (Inconel)	1150 (2102)	Good resistance to oxidizing and reducing atmospheres at high temperatures	Sulphur containing atmospheres must be avoided
Inconel MA 754	1250 (2282)	Good mechanical resistance and corrosion resistance at high temperatures in oxidizing atmospheres	
3.7035 (Titanium)	600 (1112)	Good low temperature corrosion resistance	At high temperatures light oxidation and embrittlement
Stellite 6	1200 (2192)	Good resistance to heat, corrosion, abrasion	
Tantalum	250 (482)	Good resistance to heat and acids	Light oxidation and tendency toward embrittlement at high temperatures in air
Molybdenum	2100 (3812)	Good mechanical resistance to inert, reducing and vacuum conditions, resistant to metal vapors at high temperatures	Reacts with Carbon in air and oxidizing gases
Cast iron	700 (1292)	Babbitt, Lead, Aluminum, Zinc melts	
Metal ceramic thermowells			
1.4765 Kanthal	1300 (2372)	Good resistance to high temperature oxidation	Tends toward embrittlement through recrystallization
Kanthal Super ($MoSi_2$)	1700 (3092)	Resistance to abrasion, thermal shock, surface vitrifies, chemical resistant, well suited for waste incinerators and fluidized bed ovens	Brittle at lower temperatures, ductile above 1400 °C (2552 °F)
UCAR LT1 ($CrAl_2O_2$ 77/23)	1400 (2552)	Resistant to abrasion, thermal shock, oxidation, recommended for iron and non-ferrous metal smelting, cement kilns, resistant Sulphur compounds and acids	
Coated thermowells			
1.0305 enameled	600 (1112)	Corrosive applications in the dew point range for smokestack gases	Impact and bend susceptible

Application conditions for thermowell materials			
Material	Max. Temp. no pressure °C (°F)	Advantages	Disadvantages
1.0305 Glass coated	450 (842)	Good oxidation and gas protection	Thermal shock susceptible
1.0305 PFA coated	200 (392)	Applications in concentrated hydrochloric, sulphuric and nitric acids	
Ceramic thermowells			
Al_2O_3 80% (C530)	1500 (2732)	Temperature change resistant, applications in industrial ovens	Fine porosity, not gas tight, shock susceptible
Al_2O_3 60% (C610)	1600 (2912)	Average temperature change resistance, gas tight, high fire resistance, applications in industrial ovens	Lower purity, shock susceptible
Al_2O_3 99% (C799)	1800 (3272)	Gas tight, fire resistant, applications in steel, scoriaceous and glass smelting	
Al_2O_3 99.7% (AL23)	1950 (3542)	Fine grain, absolutely gas tight, high purity and strength at high temperatures, resistant to hydrofluoric acid, alkalis, metal oxide vapors	Average thermal shock resistance
Al_2O_3 99.7% (AL24)	1950 (3542)	Porous, thermal shock resistant, high temperature strength; waste incinerators and fluidized bed ovens	
Recrystallized SiC 99%	1600 (2912)	Good resistance to acids and alkalis, Applications in neutral atmospheres to 1500 °C (2732 °F); applications in non-ferrous metal smelting	Porous
Self-bound SiC 99%	1350 (2462)	Minimum porosity, good resistance to thermal shock, corrosion, abrasion and high temperatures; recommended for applications for oxidizing and reducing atmospheres to 1500 °C (2732 °F)	
SiSiC (Protect, Silit SK)	1320 (2408)	Gas tight, high thermal shock resistance, hard, abrasion resistant; recommended for applications for regenerative air heaters, coal pulverizers, smokestack gases, Zinc, Tin and lead smelting	Average deflections at higher temperatures, not for Al, Cu, Ni, Fe smelting

Application conditions for thermowell materials			
Material	Max. Temp. no pressure °C (°F)	Advantages	Disadvantages
SiC62 (TCS)	1100 (2012)	High thermal shock resistance, hard, abrasion resistant; recommended for applications for cement kilns, waste incinerators, Zinc, Copper, Aluminum, brass and bronze smelting	Porous
Si_3N_4 (Ekatherm)	1000 (1832)	Thermal shock resistant, not wetted during smelting, recommended for brass and bronze smelting	Shock susceptible
$Si_3N_4+Al_2O_3$ (Syalon)	1300 (2372)	Thermal shock resistant, recommended for Copper and Aluminum smelting	
Graphite	1250 (2282)	Oxygen free Copper, brass and Aluminum smelting	High oxidation in air

11 Appendix 2

Materials, Resistance Table

The selection of the materials to be used for the temperature sensor is a component of the selection process. Of primary interest are the materials which will be in contact with the medium whose temperature is to be measured. The ambient atmospheres may not be neglected, in which, the humidity is usually the most common factor.

In general, the user knows the medium he wants to measure well enough that the material selection is routine. The following table can be used as an aid for the material selection. The specifications are taken from manufacturer’s corrosion resistance lists. A guarantee for the completeness and correctness cannot be assumed.

Additional information is available from our application engineers.

					Metals									Non-Metals										
	Gas/Liquid	Electrical conductivity	Concentration (%)	Temperature °C (°F)	1.4301 (3304)	1.4539	1.4541 (321)	1.4571 (316Ti)	Hastelloy B	Hastelloy C	Titanium	Tantalum	Platinum	Hard Rubber	Soft Rubber	PFA	PTFE	EPDM	Buna N	Viton A	PVDF	PVC	Glass	Al_2O_3
Acetic acid	L	+	50	80 (176)	+	+	+	+	+	+	+	+	+	-	-	+	+	+			+	-	+	+
Acetic anhydride	L	+	100	20 (68)	+	+	+	+	+	+	+	+	+			+	+					+	+	+
Acetone	L	-	100	40 (104)	+	+	+	+	+	+	+	+	+	-	-	+	+	+	-	-	-	-	+	+
Acetylene	G	-	100	20 (68)	+	+	+	+	+	+	+	+	+	+	+		+	+	+				+	+
Alum. chloride solution	L	+	30	70 (158)	-	-	-	-	+	-	-	+	+	+	+		+			+		+	+	+
Alum. chloride solution	L	+	80	70 (158)	-	-	-	-	+	-	-	+	+				+			+		+	+	+
Alum. sulfate solution	L	+	20	50 (122)	-	-	-	+	-	+	+	+	+	+	+		+			+			+	+
Alum. sulfate solution	L	+	50	50 (122)	-	-	-	+	-	+	+	+	+	-	-		+			+			+	+
Ammonia	G	-	100	50 (122)	+	+	+	+	+	+	+	-	+	-	-	+	+	+	+	-	-	-	+	+
Ammonia solution	L	+	25	50 (122)	+	+	+	+	+	+	+	-	+	-	-	+	+	+	+		+	+	+	+
Aniline	L	-	100	25 (77)	+	+	+	+	-	+	+	+	+	-	-		+			+		-	+	+
Argon	G	-	100	100 (212)	+	+	+	+	+	+	+	+	+	+	+	+	+	+	+	+	+	+	+	+
Beer	L	+		10 (50)	+	+	+	+	+	+	+	+	+			+	+	+		+		+	+	+
Benzine	L	-	100	20 (68)	+	+	+	+	+	+	+	+	+	-	-	+	+	-		+	+	-	+	+
Benzol	L	-	100	50 (122)	+	+	+	+	+	+	+	+	+	-	-	+	+	-		-	-	-	+	+
Blood	L	+			+	+	+	+	+	+	+	+	+			+	+	+		+	+	+	+	+
Brine	L	+		20 (68)	-	-	-	-	-	+	-	+	+			+	+	+	-	+		+	+	+
Bromine	L	-	100	20 (68)	-	-	-	-	-	+	-	+	+			+	+			+		-	+	+
Butane	G	-	100	50 (122)	+	+	+	+	+	+	+	+	+			+	+	-	+	+	-	-	+	+
Butyl acetate	L		100	50 (122)	+	+	+	+	+	+	+	+	+			+	+	+		-	+	-	+	+

	Gas/Liquid	Electrical conductivity	Concentration (%)	Temperature °C (°F)	Metals									Non-Metals										
					1.4301 (3304)	1.4539	1.4541 (321)	1.4571 (316Ti)	Hastelloy B	Hastelloy C	Titanium	Tantalum	Platinum	Hard Rubber	Soft Rubber	PFA	PTFE	EPDM	Buna N	Viton A	PVDF	PVC	Glass	Al_2O_3
Butyl alcohol	L	-	100	20 (68)	+	+	+	+	+	+	+	+	+			+	+		+	+		+	+	+
Butylene	G	-	100	20 (68)	+	+	+	+	+	+	+	+	+			+	+	+	+	+		+	+	+
Calcium chloride soln.	L	+	100	20 (68)	+		+	+	+	+		+	+	+	+	+	+	+	+	+	+	+	+	+
Calcium hydroxide soln.	L	+	50	50 (122)	+	+	+	+	+	+			+	-	-	+	+	+	+	+	+	+	+	+
Calcium hypochloride sol	L	+	20	50 (122)	-	-	-	-	-	+	+	+	+			+	+	+		+			+	+
Caprolactam	L	-	50	50 (122)				+	+	+			+	+	-								+	+
Carbolic acid	L	-	90	50 (122)	-	+	+	+	+	+	+	+	+	-	-	+	+	-	-	-	+	-	+	+
Carbon dioxide	G	-	100	50 (122)	+	+	+	+		+	+	+	+	+	+	+	+	+	+	+	+	+	+	+
Carbon tetrachloride	L	-	100	50 (122)	+	+	+	+	+	+	+	+		-	-	+	+	+	-	+	+	-	+	+
Carbonic acid	L	+		50 (122)	+	+	+	+	+	+	+	+	+	+	+	+	+	+	+	+	+	-	+	+
Carboxylic acid, diluted	L	-		50 (122)			+	+	+	+	+	+	+			+	+				+	-	+	+
Chlorine dioxide, dry	G	-	100	20 (68)	+					+		+	+	-	-	+	+				+		+	+
Chlorine hydrogen	G	-	100	20 (68)	-	+	+	+	+	+		+	+	-	-	+	+	+	+		+		+	+
Chlorine water	L	+	100	20 (68)	-	-	-			+		+		-	-	+	+	+		+	+	-	+	+
Chlorine, damp	G	-	100	20 (68)	-	+	-	-	-	+		+		-	-	+	+	-		+	+	+	+	+
Chlorine, dry	L	-	100	20 (68)	+	+	+	+	-	+		+	+	-	-	+	+	-		+	+	-	+	+
Chlorine, dry	G	-	100	20 (68)	+	+	+	+	-	+		+		+	-	+	+	-		+	+	+	+	+
Citric acid	L	+	60	50 (122)				+	+	+	-	+	+		-	+	+	+		+	+	-	+	+
Copper chloride soln	L	+	50	20 (68)	-	-	-	+	-	+	+	+	+	+	+	+	+		+		+	+	+	+
Copper sulfate solution	L	+	50	80 (176)	+	+	+	+	-	+	+	+	+	+	-	+	+	+	+	+	+	-	+	+
Copper sulfate solution	L	+	100	80 (176)	+	+	+	+	-	+	+	+	+	+	-	+	+	+	+	+	+	-	+	+
Deionized water	L	-			+	+	+	+	+	+	+	+	+	-	-	+	+	+	+	+	+	+	+	+
Diesel	L	-	100	50 (122)	+	+	+	+	+	+	+	+	+	-	-	+	+	-	+		+	-	+	+
Ethane	G	-	100	50 (122)	+	+	+	+	+	+	+	+	+	+	+	+	+	-	+		-	-	+	+
Ethanol	L	-	96	50 (122)	+	+	+	+	+	+	+	+	+	+	+	+	+	+	+	+	-		+	
Ethyl acetate	L	-	100	50 (122)	+	+	+	+	+	+	+	+	+	-	-	+	+	-	-	+	-		+	+
Ethyl alcohol	L	-	100	78 (172)	+	+	+	+	+	+	+	+	+	+	+		+		+			-	+	+
Ethyl ether	L	-	100	20 (68)	+	+	+	+	+	+	+	+	+	-	-	+	+	-	+		+	-	+	+
Ethylene	G	-	100	50 (122)	+	+	+	+	+	+	+	+	+	+	+	+	+	-	+		+	+	+	+
Ethylene chloride	L	-	100	50 (122)	-	+	-	+	+	+	+	+	+	-	-	+	+	-	+		-	-	+	+
Ethylene glycol	L	+	100	50 (122)	+	+	+	+	+	+	+	+	+			+	+	+			-	-	+	+
Fatty acid	L	-	100	50 (122)	+	+	+	+	+	+	+	+	+	-	-	+	+			+		+	+	+
Fluorine	G	-	100	20 (68)	+	+	+	+	-	+		-				+	+	-			+	+	-	-

	Gas/Liquid	Electrical conductivity	Concentration (%)	Temperature °C (°F)	Metals									Non-Metals										
					1.4301 (3304)	1.4539	1.4541 (321)	1.4571 (316Ti)	Hastelloy B	Hastelloy C	Titanium	Tantalum	Platinum	Hard Rubber	Soft Rubber	PFA	PTFE	EPDM	Buna N	Viton A	PVDF	PVC	Glass	Al_2O_3
Formaldehyde solution	L	+	40	50 (122)	+	+	+	+	+	+	+	+	+	-	-	+	+	-		+	+	+	+	+
Formic acid	L	+	100	80 (176)	-	+	-	+	-	+	-	+	+	-	-	+	+	-	+		+	-	+	+
Gelatin	L	+		50 (122)	+	+	+	+	+	+	+	+	+	+	+	+	+	+	+	+	+	+	+	+
Glycerine	L	-	100	100 (212)	+	+	+	+		+	+	+	+	+	-	+	+	-		+	-	-	+	+
Glycol	L	-	100	50 (122)				+	+	+	+	+	+			+	+			+	+		+	+
Heating oil	L	-	100	80 (176)	+	+	+	+		+						+	+	-	+		+		+	+
Helium	G	-	100	80 (176)	+	+	+	+	+	+	+	+			+	+	+	+			+	-	+	+
Heptane	L	-	100	50 (122)	+	+	+	+	+	+		+	+	-	-	+	+	-	-	+	+	-	+	+
Hexane	L	-	100	50 (122)	+	+	+	+	+	+		+	+			+	+	-		+	+	-	+	+
Hydrazine solution	L	+	25	20 (68)	+	-	+	-					+	-	-	+	+	+	-		+	+	-	-
Hydrobromic acid	L	+	48	50 (122)	-	-	-	-	+	-	-	+	+	+	+	+	+	-		+		+	+	+
Hydrochloric acid	L	+	10	50 (122)	-	-	-	-	+	-	+	+	+	+	-	+	+	-	-	+	+	+	+	+
Hydrochloric acid	L	+	37	20 (68)	-	-	-	-	+	+	-	+	+	+	-	+	+	-	-	+	+	+	+	+
Hydrocyanic acid	L	+	100	20 (68)	+	+	+	+	+	+	+	+	+	-	-	+	+			+		+	+	+
Hydrofluoric acid	L	+	40	20 (68)	-	-	-	-	-	+	-	-	+	+	-	+	+	-	-	-	+	+	-	-
Hydrofluoric acid	L	+	70	20 (68)	-	-	-	-	-	+	-	-	+	-	-	+	+	-	-	-	+	-	-	-
Hydrogen	G	-	100	50 (122)	+	+	+	+	+	+		+	+			+	+	+	+	+	+	+	+	+
Hydrogen peroxide soln.	L	+	40	20 (68)	+	+	+	+		+	-	+	-	-	-	+	+	+		+	+	-	+	
Hydrogen sulphide dry.	G	-	100	20 (68)	+	+	+	+	-	+	+	+	+	+	+	+	+	+		+	+	-	+	+
Iron-III chloride soln.	L	+	3	20 (68)	-	+	-	-	-	+	+	+	+			+	+	+	+	+	+	+	+	+
Iron-III chloride soln.	L	+	10	20 (68)	-	-	-	-	-	+	+	+	+	+	-	+	+	+	+	+	+	+	+	+
Iron-III sulfate soln.	L	+	10	20 (68)	+	+	+	+	+	+	+	+	+	+		+	+	+	+	+	+	+	+	+
Kerosine	L	-	100	20 (68)	+			+								+	+		+	+			+	
Krypton	G	-	100	50 (122)	+	+	+	+	+	+	+	+	+	+	+	+	+	-	+		-	-	+	+
Magnesium chloride soln.	L	+	50	20 (68)	-	-	-	-	+	+	+	+	+	+	+	+	+	+	+	+	+	+	+	+
Magnesium sulfate soln.	L	+	20	50 (122)	+	+	+	+	+	-		+	+	+	+	+	+	+	+	+	+	+	+	+
Malic acid	L	+	50	50 (122)	+	+	+	+	+	+	+	+	+	+	+	+	+	+		+	+	+	+	+
Methane	G	-	100	50 (122)	+	+	+	+	+	+	+	+	+	+	+	+	+	-	+	+	-	-	+	+
Methyl alcohol	L	-	100	50 (122)	+	+	+	+	+	+	+	+	+	+	+	+	+	+	+	-	+	-	+	+
Methyl benzol = Toluol	L	-	100	50 (122)	+	+	+	+	+	+				-	-	+	+	-	-	+	+	-	+	+
Methylene chloride	G	-	100	20 (68)	+	+	+	+	+	+	+	+	+	-	-	+	+	-	-	-	-	-	+	+
Mono chlorine acetic acid	L	+	70	50 (122)				+	+	+	+	+	+	-	-	+	+	+	-	-		-	+	+

					Metals									Non-Metals											
	Gas/Liquid	Electrical conductivity	Concentration (%)	Temperature °C (°F)	1.4301 (3304)	1.4539	1.4541 (321)	1.4571 (316Ti)	Hastelloy B	Hastelloy C	Titanium	Tantalum	Platinum	Hard Rubber	Soft Rubber	PFA	PTFE	EPDM	Buna N	Viton A	PVDF	PVC	Glass	Al_2O_3
Natural gas, dry	G	-	100	40 (104)	+	+	+	+	+	+	+	+	+	-	-	+	+	-	+		+	+	+	+
Neon	G	-	100	100 (212)	+	+	+	+	+	+	+	+	+			+	+		+				+	+
Nitric acid	L	+	20	40 (104)	+	+	+	+	-	+	+	+	+	-	-	+	+	-	-	-	+	+	+	+
Nitric acid	L	+	70	50 (122)	-	+	+	+	-	-	+	+	+	-	-	+	+	-	-	-	+	-	+	+
Nitrogen	G	-	100	50 (122)	+	+	+	+	+	+	+	+	+			+	+	+	+	+	-	-	+	+
Oleum	L	+	10	50 (122)	-	-	-	-	+	-	-	-	+	-	-		+	-	-	+	-	-	+	+
Oleum	L	+	20	20 (68)	-	-	-	-	+	-	-	+	+	-	-		+	-	-	+	-	-	+	+
Olive oil	L	-		50 (122)	+	+	+	+	+	+	+	+	+	+	-	+	+		+	+	+	-	+	+
Oxalic acid solution	L	+	10	50 (122)	-	+	-	+	+	+	-	+	+	+	-	+	+	+		+	+	-	+	+
Oxygen	G	-	100	50 (122)	+	+	+	+	+	+		+	+			+	+	+		+	-	-	+	+
Ozone	G	-	10	20 (68)	+	+	+	+		+	+	+	+	-	-	+	+	+	-	+	+	+	+	
Perchloroethylene	L	-	100	50 (122)	+	+	+	+	+	+	+	+	+	-	-	+	+	-	-	+	+	-	+	+
Petroleum	L	-	100	20 (68)	+	+	+	+	+	+		+	+	-	-	+	+	-	+	+	+	+	+	+
Phenol	L	-	90	50 (122)	-	+	+	+	+	+	+	+	+	-	-	+	+	-	-	-	+	-	+	+
Phosgene	L	-	100	20 (68)	+	+	+	+	+	+	+	+	+	-	-	+	+	+	-			-	+	+
Phosphoric acid	L	+	30	50 (122)	-	+	-	+	+	+	-	+	+	-	-	+	+	+	-	+	+	-	+	+
Phosphoric acid	L	+	80	20 (68)	-	+	-	+	+	+	-	+	+	+	+	+	+	-	-	+	+	+	+	+
Photo emulsion	L	+		20 (68)	+	+	+	+		+			+			+	+						+	+
Phthalic acid anhydride	L	-		20 (68)	-	-	-	-	+	+	+	+	+	+	-	+	+		-	+	+	+	+	+
Potassium chloride soln.	L	+	30	20 (68)	-	-	-	+	+	+	+	+	+	+	+	+	+	+	+	+	+	+	+	+
Potassium hydroxide sol	L	+	50	20 (68)	+	+	+	+	+	+	-	-	+			+	+	+		-	+	+	+	+
Potassium permang. L.	L	+	50	20 (68)	+	+	+	+		+		+	+	-	-	+	+		+	+	+	-	+	
Potassium sulfate soln	L	+	20	50 (122)	+	+	+	+	+		+	+	+			+	+	+	+	+	+	+	+	+
Propane	G	-	100	50 (122)	+	+	+	+	+	+				-	-	+	+	-	-	+	-	-	+	+
Sea water	L	+		50 (122)	-	+	-	-	-	+	+	+	+	+	+	+	+	+	+	+	+	-	+	+
Sodium bicarbonate soln.	L	+	20	50 (122)			+	+	+	+	+		+	+		+	+		+	+	+		+	+
Sodium bisulfate soln.	L	+	10	50 (122)	-	-	-	+	+	+	+	+	+	+	+	+	+		+	+	+	+	+	+
Sodium bisulfate soln.	L	+	50	50 (122)	+	+	+	+		+	+	+	+	+		+	+		+		+	+	+	+
Sodium carbonate soln.	L	+	50	50 (122)	-	-	-	-	+	+	+	+	+	+	+	+	+	+	+	+		+	+	+
Sodium chloride soln.	L	+	10	20 (68)	-	+	-	-	-	+	+	+	+	-	-	+	+	+	+	+	+	+	+	+
Sodium chloride soln.	L	+	20	20 (68)	-	-	-	-	-	+	+	+	+	-	-	+	+	+	+	+	+	+	+	+
Sodium hydroxide soln.	L	+	20	50 (122)	+	+	+	+	+	+	+	-		+	-	+	+	+	-	-	+	+	-	+
Sodium hydroxide soln.	L	+	50	50 (122)	+	+	+	+	+	+	-	-		+	+	+	+	-	-	-	+	+	-	-

	Gas/Liquid	Electrical conductivity	Concentration (%)	Temperature °C (°F)	Metals									Non-Metals										
					1.4301 (3304)	1.4539	1.4541 (321)	1.4571 (316Ti)	Hastelloy B	Hastelloy C	Titanium	Tantalum	Platinum	Hard Rubber	Soft Rubber	PFA	PTFE	EPDM	Buna N	Viton A	PVDF	PVC	Glass	Al_2O_3
Sodium hypo chloride sol	L	+	20	50 (122)	-	-	-	-		+	+	-	+	-	-	+	+	+		+	+	-	+	+
Sodium nitrate solution	L	+	30	50 (122)	+	+	+	+		+	+	+	+	+	+	+	+	+		+	+	-	+	+
Sodium silicate solution	L	+	30	50 (122)	+	+	+	+	+			+	+	+	+	+	+	+	+	+	+	+	+	+
Sodium sulfate solution	L	+	20	50 (122)	+	+	+	+	+	+		+	+	+	+	+	+	+	+	+	+	-	+	+
Sodium vanadate soln.	L	+	10	50 (122)	+	+	+	+	+	+						+	+	+	+	+	+		+	+
Spin bath	L	+		50 (122)				+	+	-	-	+		-	-	+	+	-		+		-	+	+
Sulphur dioxide, dry	G	-	100	50 (122)	+	+	+	+	-	+	+	+	+	+		+	+	+		+	+	-	+	+
Sulphuric acid	L	+	10	50 (122)	-	+	-	-	+	+	-	+	+	+	+	+	+	+		+	+	+	+	+
Sulphuric acid	L	+	50	20 (68)	-	+	-	-	+	+	-	+	+	+	+	+	+	-		+	+	-	+	+
Sulphuric acid	L	+	96	20 (68)	-	+	-	+	+	+	-	+	+	-	-	+	+	-		+	+	-	+	+
Sulphurous acid	L	+	10	20 (68)	+	+	-	+	-	+		+		+	-	+	+	+		+	+	+		
Tannic acid	L	+	50	50 (122)			+	+		+				+	+	+	+	-			-		+	+
Tartaric acid	L	+	20	50 (122)	-	-	-	-	+	+	+	+		+	+	+	+			+		+	+	+
Toluol	L	-	100	50 (122)	+	+	+	+	+	+				-	-	+	+	-	-	+	+	-	+	+
Trichlorethylene	L	-	100	50 (122)	+	+	+	+	+	+	+	+	+	-	-	+	+	-	-	+	+	-	+	+
Tricresyl phosphate	L		100	50 (122)	+	+	+	+	+	+				-	-	+	+		+	-	-	-	+	+
Urea	L	+	30	50 (122)			+			+		+	+	+	+	+	+	+	+	+	+	-	+	+
Vinyl acetate	L		100	20 (68)	+			+	-	+				-	-	+	+	+		+	+	+	+	
Vinyl chloride	L		100	20 (68)		+		+	+	+		+	+	-	-	+	+		-	+			+	
Wort (beer)	L	+		5 (41)	+	+	+	+	+	+	+	+	+			+	+	+		+		+	+	+
Xylene	L	-	100	50 (122)	+	+	+	+	+	+				-	-	+	+	-		-	+	-	+	+
Yeast	L	+		20 (68)	+	+	+	+	+	+	+	+	+	+	+	+	+	+	+	+		+	+	+
Zinc chloride solution	L	+	60	20 (68)	-	-	-	-	+	+	+	+		+	+	+	+	+	+	+	+	+	+	+

Symbols in resistance table:

+ means usable material
- means unsuitable material
blank cells indicate unknown resistance

12 Bibliography

W.W. Wendlandt	Thermochimica acta Volume 73, Amsterdam, 1984
Nicholas, White	Traceable Temperatures J. Wiley, Sussex, 1994
Asimov	Exakte Geheimnisse unserer Welt Droemer Knaur, 1984 (Exact Secrets of Our World)
Paul H. Dyke	Thermoelectric Thermometry Leeds & Northrup Company, 1955
F. Henning	Temperaturmessung J.A. Barth Verlag, Leipzig, 1951 (Temperature Measurements)
F. Lieneweg	Temperaturmessung akademische Verlagsgesellschaft, Leipzig, 1950 (Temperature Measurements)
M.K. Juchheim	Elektrische Temperaturmessung 5. Auflage, Fulda, 1996 (Electrical Temperature Measurements)
Körtvélyessy	Thermoelement Praxis 2. Ausgabe, Vulkan-Verlag, Essen, 1987 (Thermocouple Practice)
J. W. Murdock	Power Test Code Thermometer Wells Journal of Engineering Power, Oct. 1959
	AD-Merkblätter, Taschenbuch-Ausgabe 1998 Carl Heymanns Verlag, Beuth Verlag, 1998 (AD Data Sheets, Pocket Book edition)
	TRD Technische Regeln für Dampfkessel, Taschenbuch-Ausgabe 1997 Carl Heymanns Verlag, Beuth Verlag, 1998 (TRD Technical Regulations for Steam Boilers Pocket Book Edition)
F. Lieneweg (Hrsg./Editor)	Handbuch der technischen Temperaturmessung, Abschnitt 6.3 Die mechanische Beanspruchung von Thermometern (Autor: P. Dittrich) Vieweg Verlag, 1976) (Handbook for Temperature Measurements, Chapter 6.3 The Mechanical Forces on Thermometers)

O. Uhrig	Beitrag zur Berechnung und Gestaltung von hochbeanspruchten Schutzrohren. VDI-Fortschrittsberichte, VDI-Verlag, 1981 (Article for Calculations and Designs for Highly Stressed Thermowells)
Hütte	Die Grundlagen der Ingenieurwissenschaften Springer-Verlag, 1996 (Basics for Engineering Sciences)
S. Schwaigerer	Festigkeitsberechnung im Dampfkessel-, Behälter- und Rohrleitungsbau. Springer-Verlag, 1978 (Manufacturing Calculations for Steam Boilers, Tanks and Pipeline Designs
	Temperatursensoren – Prinzipien und Applikationen Expert Verlag, ISBN 3-8169-1261, 1995 (Temperature Sensors – Principles and Applications)
	Temperaturmessung in der Technik Expert Verlag, ISBN 3-8169-0200-6 (Temperature Measurements in Technology)
	Temperatursensoren Firmenpublication, Hartmann & Braun, 8123 D/E (Temperature Sensors - Company Publication)
	Metall Forschung und Entwicklung Degussa, Frankfurt 1991 (Metal Research and Development)
Harald Jacques	Industrielle Messtechnik mit Pt-Schichtmesswiderständen (Industrial Measurements with Pt Film Resistors)
Joachim Scholz	Temperatusensoren für den industriellen Einsatz Degussa-Sonderdruck Nr.8206 aus industrie-elektik + elektronik 29.Jahrgang 1984, Nr.11 Dr. Alfred Hüthig-Verlag / Heidelberg (Temperature Sensors for Industrial Applications)
Dr. Harald Jacques	Hochstabile Temperatursensoren für vielfältige Anwendungen Degussa-Sonderdruck Nr.8215 (High Stability Temperature Sensors for Multiple Applications)
	VDI/VDE 2600: Metrologie (Messtechnik), Blatt 1 bis 6 (Sheets 1 to 6) (Metrology)
	DIN IEC 381: Analoge Signale für Regel- und Steueranlagen (Analog Signals for Control Systems)

J.Sturm, B.Winkler	MSR in der Chemischen Technik, Band 1 Springer Verlag (Measuring and Control in Chemical Technology, Vol. 1)
	Bell System Technical Reference: PUB 41212 Data Sets 202S and 202T
	HART-Nutzerorganisation HART Feld-Kommunikations-Protokoll, Stand 09/92 (HART-User Organization Field Communication Protocol)
	VDI Berichte 982, Temperatur 92 VDI-Verlag, Stand 1992 (VDI Reports 982, Temperature 92)
	Mess-, Analysen- und Prozessleittechnik DECHEMA e.V/ACHEMA, Stand 1994 (Measuring, Analyzing and Process Control Technology)
	PROFIBUS, Technische Kurzbeschreibung PNO, Stand 97 (PROFIBUS, Condensed Technical Description)
	Fieldbus FOUNDATION, Application Guide Fieldbus FOUNDATION AG-163 Rev. 1.0
DKD-3	Angabe der Messunsicherheiten bei Kalibrierungen Verlag für neue Wissenschaften GmbH, Bremerhaven (Tolerance Specifications for Calibrations)
DKD-3-E1	Angabe der Messunsicherheit bei Kalibrierungen, Beispiele Verlag für neue Wissenschaften GmbH, Bremerhaven (Specifications for Measuring Uncertainties for Calibrations, Examples)
Dr. W. Kessel	Messunsicherheitsanalyse – fundamentaler Bestandteil der Prüfmittelüberwachung (Measurement Uncertainty Analysis, Fundamental Component of Test Equipment Monitoring)
Franz Adunka	Messunsicherheiten: Theorie und Praxis Vulkan Verlag, Essen, 1998 (Measurement Uncertainities, Theory and Practice)
Bernhard, F. (Hrsg..Editor):	Handbuch der technischen Temperaturmessung, Springer-Verlag Berlin (Handbook for Temperature Measurements)
	VDI-Wärmeatlas, 8. Auflage, Springer-Verlag Berlin, 1998 (VDI-Heat Atlas, 8th Edition)

Weichert, Lother	Temperaturmessung in der Technik VAE Kontakt & Studium Band 9; Expert Verlag (Temperature Measurements in Technology)
H. E. Bennett	Noble Metal Thermocouples Johnson, Matthey & Co, 1958
Horst Böhm	Einführung in die Metallkunde BI Hochschultaschenbücher (Introduction to Metal Science)
Dr. A. Schulz	Metallische Werkstoffe für Thermoelemente N.E.M.-Verlag Berlin, Heft 10 (Metal Materials for Thermocouples)
	PTB-Texte, Band 7, 20 Jahre Deutscher Kalibrierdienst, Wirtschaftsverlag NW, 1998 (PTB Texts, Vol. 7, 20 Years German Calibration Service)
Ch. Diedrich	PROFIBUS PA Verlag Oldenbourg, ISBN 3-8350-3056-3
P. Westerfeld	Die Entwicklung der betrieblichen Temperaturmesstechnik in der Prozessautomatisierung in: Elektrotechnik – Signale, Aufbruch, Perspektiven; Geschichte der Elektrotechnik 7 VDE-Verlag Offenbach, 1988 (The Development of Industrial Temperature Measurement Technology in Process Automation)
Optris GmbH	Basics of Non-contact Infrared Temperature Measurement, 2006

13 Basic Values for Thermocouples and Resistance Thermometers

Based on the International Temperature Scale ITS-90

According to EN 60584/IEC 584:
Thermocouples Types T, E, J, K, N, S, R, B
According to EN 60751/IEC 751:
Resistance Thermometers Pt100

Based on the Temperature Scale IPTS-68

According to DIN 43710 (repealed since 1994. No new editions):
Thermocouples Types U and L
According to DIN 43760:
Resistance Thermometers Ni100

Resistance thermometers with special measurement resistors Pt50, Pt200, Pt500, Pt1000

The standardized measurement resistor Pt100 according to EN 60751/IEC 751 has a nominal resistance of 100 Ω at 0 °C (32 °F). Based on these standards, measurement resistors with fractional or whole number multiples of these nominal resistance values are commercially available. Based on the statements from the manufacturer the following conversion factors apply.

Designation	Nominal Resistance 0 °C (32 °F)	Factor	Resistance Value
Pt50	50 Ω	0.5	0.5 x Pt100 EN 60751/IEC 751
Pt200	200 Ω	2	2 x Pt100 EN 60751/IEC 751
Pt500	500 Ω	5	5 x Pt100 EN 60751/IEC 751
Pt1000	1000 Ω	10	10 x Pt100 EN 60751/IEC 751

For Ni-resistance thermometers, a similar procedure applies.

°C t90	Type T Cu-CuNi mV	Type E NiCr-CuNi mV	Type J Fe-CuNi mV	Type K NiCr-Ni mV	Type N NiCrSi-NiSi mV	Type S Pt10Rh-Pt mV	Type R Pt13Rh-Pt mV	Type B Pt30Rh-Pt6Rh mV	Type U Cu-CuNi mV	Type L Fe-CuNi mV	Pt100 Ω	Ni100 Ω	°F t90
-270	-6.258	-9.835		-6.458	-4.345								**-454.0**
-269	-6.256	-9.833		-6.457	-4.345								**-452.2**
-268	-6.255	-9.831		-6.456	-4.344								**-450.4**
-267	-6.253	-9.828		-6.455	-4.344								**-448.6**
-266	-6.251	-9.825		-6.453	-4.343								**-446.8**
-265	-6.248	-9.821		-6.452	-4.342								**-445.0**
-264	-6.245	-9.817		-6.450	-4.341								**-443.2**
-263	-6.242	-9.813		-6.448	-4.340								**-441.4**
-262	-6.239	-9.808		-6.446	-4.339								**-439.6**
-261	-6.236	-9.802		-6.444	-4.337								**-437.8**
-260	-6.232	-9.797		-6.441	-4.336								**-436.0**
-259	-6.228	-9.790		-6.438	-4.334								**-434.2**
-258	-6.223	-9.784		-6.435	-4.332								**-432.4**
-257	-6.219	-9.777		-6.432	-4.330								**-430.6**
-256	-6.214	-9.770		-6.429	-4.328								**-428.8**
-255	-6.209	-9.762		-6.425	-4.326								**-427.0**
-254	-6.204	-9.754		-6.421	-4.324								**-425.2**
-253	-6.198	-9.746		-6.417	-4.321								**-423.4**
-252	-6.193	-9.737		-6.413	-4.319								**-421.6**
-251	-6.187	-9.728		-6.408	-4.316								**-419.8**
-250	-6.180	-9.718		-6.404	-4.313								**-418.0**
-249	-6.174	-9.709		-6.399	-4.310								**-416.2**
-248	-6.167	-9.698		-6.393	-4.307								**-414.4**
-247	-6.160	-9.688		-6.388	-4.304								**-412.6**
-246	-6.153	-9.677		-6.382	-4.300								**-410.8**
-245	-6.146	-9.666		-6.377	-4.297								**-409.0**
-244	-6.138	-9.654		-6.370	-4.293								**-407.2**
-243	-6.130	-9.642		-6.364	-4.289								**-405.4**
-242	-6.122	-9.630		-6.358	-4.285								**-403.6**
-241	-6.114	-9.617		-6.351	-4.281								**-401.8**
-240	-6.105	-9.604		-6.344	-4.277								**-400.0**
-239	-6.096	-9.591		-6.337	-4.273								**-398.2**
-238	-6.087	-9.577		-6.329	-4.268								**-396.4**
-237	-6.078	-9.563		-6.322	-4.263								**-394.6**
-236	-6.068	-9.548		-6.314	-4.258								**-392.8**
-235	-6.059	-9.534		-6.306	-4.254								**-391.0**
-234	-6.049	-9.519		-6.297	-4.248								**-389.2**
-233	-6.038	-9.503		-6.289	-4.243								**-387.4**
-232	-6.028	-9.487		-6.280	-4.238								**-385.6**
-231	-6.017	-9.471		-6.271	-4.232								**-383.8**
-230	-6.007	-9.455		-6.262	-4.226								**-382.0**
-229	-5.996	-9.438		-6.252	-4.221								**-380.2**
-228	-5.985	-9.421		-6.243	-4.215								**-378.4**
-227	-5.973	-9.404		-6.233	-4.209								**-376.6**
-226	-5.962	-9.386		-6.223	-4.202								**-374.8**
-225	-5.950	-9.368		-6.213	-4.196								**-373.0**
-224	-5.938	-9.350		-6.202	-4.189								**-371.2**
-223	-5.926	-9.331		-6.192	-4.183								**-369.4**
-222	-5.914	-9.313		-6.181	-4.176								**-367.6**
-221	-5.901	-9.293		-6.170	-4.169								**-365.8**

°C t90	Type T Cu-CuNi mV	Type E NiCr-CuNi mV	Type J Fe-CuNi mV	Type K NiCr-Ni mV	Type N NiCrSi-NiSi mV	Type S Pt10Rh-Pt mV	Type R Pt13Rh-Pt mV	Type B Pt30Rh-Pt6Rh mV	Type U Cu-CuNi mV	Type L Fe-CuNi mV	Pt100 Ω	Ni100 Ω	°F t90
-220	-5.888	-9.274		-6.158	-4.162								**-364.0**
-219	-5.876	-9.254		-6.147	-4.154								**-362.2**
-218	-5.863	-9.234		-6.135	-4.147								**-360.4**
-217	-5.850	-9.214		-6.123	-4.140								**-358.6**
-216	-5.836	-9.193		-6.111	-4.132								**-356.8**
-215	-5.823	-9.172		-6.099	-4.124								**-355.0**
-214	-5.809	-9.151		-6.087	-4.116								**-353.2**
-213	-5.795	-9.129		-6.074	-4.108								**-351.4**
-212	-5.782	-9.107		-6.061	-4.100								**-349.6**
-211	-5.767	-9.085		-6.048	-4.091								**-347.8**
-210	-5.753	-9.063	-8.095	-6.035	-4.083								**-346.0**
-209	-5.739	-9.040	-8.076	-6.021	-4.074								**-344.2**
-208	-5.724	-9.017	-8.057	-6.007	-4.066								**-342.4**
-207	-5.710	-8.994	-8.037	-5.994	-4.057								**-340.6**
-206	-5.695	-8.971	-8.017	-5.980	-4.048								**-338.8**
-205	-5.680	-8.947	-7.996	-5.965	-4.038								**-337.0**
-204	-5.665	-8.923	-7.976	-5.951	-4.029								**-335.2**
-203	-5.650	-8.899	-7.955	-5.936	-4.020								**-333.4**
-202	-5.634	-8.874	-7.934	-5.922	-4.010								**-331.6**
-201	-5.619	-8.850	-7.912	-5.907	-4.000								**-329.8**
-200	-5.603	-8.825	-7.890	-5.891	-3.990				-5.70	-8.15	18.52		**-328.0**
-199	-5.587	-8.799	-7.868	-5.876	-3.980				-5.68	-8.12	18.95		**-326.2**
-198	-5.571	-8.774	-7.846	-5.861	-3.970				-5.66	-8.09	19.38		**-324.4**
-197	-5.555	-8.748	-7.824	-5.845	-3.960				-5.64	-8.06	19.82		**-322.6**
-196	-5.539	-8.722	-7.801	-5.829	-3.950				-5.62	-8.03	20.25		**-320.8**
-195	-5.523	-8.696	-7.778	-5.813	-3.939				-5.60	-8.00	20.68		**-319.0**
-194	-5.506	-8.669	-7.755	-5.797	-3.928				-5.59	-7.98	21.11		**-317.2**
-193	-5.489	-8.643	-7.731	-5.780	-3.918				-5.57	-7.95	21.54		**-315.4**
-192	-5.473	-8.616	-7.707	-5.763	-3.907				-5.55	-7.92	21.97		**-313.6**
-191	-5.456	-8.588	-7.683	-5.747	-3.896				-5.53	-7.89	22.40		**-311.8**
-190	-5.439	-8.561	-7.659	-5.730	-3.884				-5.51	-7.86	22.83		**-310.0**
-189	-5.421	-8.533	-7.634	-5.713	-3.873				-5.49	-7.83	23.25		**-308.2**
-188	-5.404	-8.505	-7.610	-5.695	-3.862				-5.47	-7.80	23.68		**-306.4**
-187	-5.387	-8.477	-7.585	-5.678	-3.850				-5.45	-7.77	24.11		**-304.6**
-186	-5.369	-8.449	-7.559	-5.660	-3.838				-5.43	-7.74	24.54		**-302.8**
-185	-5.351	-8.420	-7.534	-5.642	-3.827				-5.41	-7.71	24.97		**-301.0**
-184	-5.334	-8.391	-7.508	-5.624	-3.815				-5.40	-7.68	25.39		**-299.2**
-183	-5.316	-8.362	-7.482	-5.606	-3.803				-5.38	-7.65	25.82		**-297.4**
-182	-5.297	-8.333	-7.456	-5.588	-3.790				-5.36	-7.62	26.25		**-295.6**
-181	-5.279	-8.303	-7.429	-5.569	-3.778				-5.34	-7.59	26.67		**-293.8**
-180	-5.261	-8.273	-7.403	-5.550	-3.766				-5.32	-7.56	27.10		**-292.0**
-179	-5.242	-8.243	-7.376	-5.531	-3.753				-5.30	-7.53	27.52		**-290.2**
-178	-5.224	-8.213	-7.348	-5.512	-3.740				-5.28	-7.50	27.95		**-288.4**
-177	-5.205	-8.183	-7.321	-5.493	-3.728				-5.26	-7.47	28.37		**-286.6**
-176	-5.186	-8.152	-7.293	-5.474	-3.715				-5.24	-7.44	28.80		**-284.8**
-175	-5.167	-8.121	-7.265	-5.454	-3.702				-5.22	-7.40	29.22		**-283.0**
-174	-5.148	-8.090	-7.237	-5.435	-3.688				-5.20	-7.37	29.64		**-281.2**
-173	-5.128	-8.059	-7.209	-5.415	-3.675				-5.18	-7.34	30.07		**-279.4**
-172	-5.109	-8.027	-7.181	-5.395	-3.662				-5.16	-7.31	30.49		**-277.6**
-171	-5.089	-7.995	-7.152	-5.374	-3.648				-5.14	-7.28	30.91		**-275.8**

°C t90	Type T Cu-CuNi mV	Type E NiCr-CuNi mV	Type J Fe-CuNi mV	Type K NiCr-Ni mV	Type N NiCrSi-NiSi mV	Type S Pt10Rh-Pt mV	Type R Pt13Rh-Pt mV	Type B Pt30Rh-Pt6Rh mV	Type U Cu-CuNi mV	Type L Fe-CuNi mV	Pt100 Ω	Ni100 Ω	°F t90
-170	-5.070	-7.963	-7.123	-5.354	-3.634				-5.12	-7.25	31.34		**-274.0**
-169	-5.050	-7.931	-7.094	-5.333	-3.621				-5.10	-7.22	31.76		**-272.2**
-168	-5.030	-7.899	-7.064	-5.313	-3.607				-5.08	-7.19	32.18		**-270.4**
-167	-5.010	-7.866	-7.035	-5.292	-3.593				-5.06	-7.15	32.60		**-268.6**
-166	-4.989	-7.833	-7.005	-5.271	-3.578				-5.04	-7.12	33.02		**-266.8**
-165	-4.969	-7.800	-6.975	-5.250	-3.564				-5.02	-7.09	33.44		**-265.0**
-164	-4.949	-7.767	-6.944	-5.228	-3.550				-4.99	-7.06	33.86		**-263.2**
-163	-4.928	-7.733	-6.914	-5.207	-3.535				-4.97	-7.03	34.28		**-261.4**
-162	-4.907	-7.700	-6.883	-5.185	-3.521				-4.95	-6.99	34.70		**-259.6**
-161	-4.886	-7.666	-6.853	-5.163	-3.506				-4.93	-6.96	35.12		**-257.8**
-160	-4.865	-7.632	-6.821	-5.141	-3.491				-4.91	-6.93	35.54		**-256.0**
-159	-4.844	-7.597	-6.790	-5.119	-3.476				-4.89	-6.90	35.96		**-254.2**
-158	-4.823	-7.563	-6.759	-5.097	-3.461				-4.87	-6.86	36.38		**-252.4**
-157	-4.802	-7.528	-6.727	-5.074	-3.446				-4.84	-6.83	36.80		**-250.6**
-156	-4.780	-7.493	-6.695	-5.052	-3.431				-4.82	-6.80	37.22		**-248.8**
-155	-4.759	-7.458	-6.663	-5.029	-3.415				-4.80	-6.76	37.64		**-247.0**
-154	-4.737	-7.423	-6.631	-5.006	-3.400				-4.78	-6.73	38.06		**-245.2**
-153	-4.715	-7.387	-6.598	-4.983	-3.384				-4.76	-6.70	38.47		**-243.4**
-152	-4.693	-7.351	-6.566	-4.960	-3.368				-4.73	-6.66	38.89		**-241.6**
-151	-4.671	-7.315	-6.533	-4.936	-3.352				-4.71	-6.63	39.31		**-239.8**
-150	-4.648	-7.279	-6.500	-4.913	-3.336				-4.69	-6.60	39.72		**-238.0**
-149	-4.626	-7.243	-6.467	-4.889	-3.320				-4.67	-6.56	40.14		**-236.2**
-148	-4.604	-7.206	-6.433	-4.865	-3.304				-4.64	-6.53	40.56		**-234.4**
-147	-4.581	-7.170	-6.400	-4.841	-3.288				-4.62	-6.50	40.97		**-232.6**
-146	-4.558	-7.133	-6.366	-4.817	-3.271				-4.60	-6.46	41.39		**-230.8**
-145	-4.535	-7.096	-6.332	-4.793	-3.255				-4.58	-6.43	41.80		**-229.0**
-144	-4.512	-7.058	-6.298	-4.768	-3.238				-4.55	-6.39	42.22		**-227.2**
-143	-4.489	-7.021	-6.263	-4.744	-3.221				-4.53	-6.36	42.63		**-225.4**
-142	-4.466	-6.983	-6.229	-4.719	-3.205				-4.51	-6.33	43.05		**-223.6**
-141	-4.443	-6.945	-6.194	-4.694	-3.188				-4.48	-6.29	43.46		**-221.8**
-140	-4.419	-6.907	-6.159	-4.669	-3.171				-4.46	-6.26	43.88		**-220.0**
-139	-4.395	-6.869	-6.124	-4.644	-3.153				-4.43	-6.22	44.29		**-218.2**
-138	-4.372	-6.831	-6.089	-4.618	-3.136				-4.41	-6.19	44.70		**-216.4**
-137	-4.348	-6.792	-6.054	-4.593	-3.119				-4.38	-6.15	45.12		**-214.6**
-136	-4.324	-6.753	-6.018	-4.567	-3.101				-4.36	-6.11	45.53		**-212.8**
-135	-4.300	-6.714	-5.982	-4.542	-3.084				-4.33	-6.08	45.94		**-211.0**
-134	-4.275	-6.675	-5.946	-4.516	-3.066				-4.31	-6.04	46.36		**-209.2**
-133	-4.251	-6.636	-5.910	-4.490	-3.048				-4.28	-6.01	46.77		**-207.4**
-132	-4.226	-6.596	-5.874	-4.463	-3.030				-4.26	-5.97	47.18		**-205.6**
-131	-4.202	-6.556	-5.838	-4.437	-3.012				-4.23	-5.93	47.59		**-203.8**
-130	-4.177	-6.516	-5.801	-4.411	-2.994				-4.21	-5.90	48.01		**-202.0**
-129	-4.152	-6.476	-5.764	-4.384	-2.976				-4.18	-5.86	48.42		**-200.2**
-128	-4.127	-6.436	-5.727	-4.357	-2.958				-4.16	-5.82	48.83		**-198.4**
-127	-4.102	-6.396	-5.690	-4.330	-2.939				-4.13	-5.79	49.24		**-196.6**
-126	-4.077	-6.355	-5.653	-4.303	-2.921				-4.11	-5.75	49.65		**-194.8**
-125	-4.052	-6.314	-5.616	-4.276	-2.902				-4.08	-5.71	50.06		**-193.0**
-124	-4.026	-6.273	-5.578	-4.249	-2.883				-4.05	-5.68	50.47		**-191.2**
-123	-4.000	-6.232	-5.541	-4.221	-2.865				-4.03	-5.64	50.88		**-189.4**
-122	-3.975	-6.191	-5.503	-4.194	-2.846				-4.00	-5.60	51.29		**-187.6**
-121	-3.949	-6.149	-5.465	-4.166	-2.827				-3.98	-5.57	51.70		**-185.8**

°C t90	Type T Cu-CuNi mV	Type E NiCr-CuNi mV	Type J Fe-CuNi mV	Type K NiCr-Ni mV	Type N NiCrSi-NiSi mV	Type S Pt10Rh-Pt mV	Type R Pt13Rh-Pt mV	Type B Pt30Rh-Pt6Rh mV	Type U Cu-CuNi mV	Type L Fe-CuNi mV	Pt100 Ω	Ni100 Ω	°F t90
-120	-3.923	-6.107	-5.426	-4.138	-2.808				-3.95	-5.53	52.11		**-184.0**
-119	-3.897	-6.065	-5.388	-4.110	-2.789				-3.92	-5.49	52.52		**-182.2**
-118	-3.871	-6.023	-5.350	-4.082	-2.769				-3.90	-5.45	52.93		**-180.4**
-117	-3.844	-5.981	-5.311	-4.054	-2.750				-3.87	-5.41	53.34		**-178.6**
-116	-3.818	-5.939	-5.272	-4.025	-2.730				-3.84	-5.38	53.75		**-176.8**
-115	-3.791	-5.896	-5.233	-3.997	-2.711				-3.81	-5.34	54.15		**-175.0**
-114	-3.765	-5.853	-5.194	-3.968	-2.691				-3.79	-5.30	54.56		**-173.2**
-113	-3.738	-5.810	-5.155	-3.939	-2.672				-3.76	-5.26	54.97		**-171.4**
-112	-3.711	-5.767	-5.116	-3.911	-2.652				-3.73	-5.22	55.38		**-169.6**
-111	-3.684	-5.724	-5.076	-3.882	-2.632				-3.71	-5.19	55.79		**-167.8**
-110	-3.657	-5.681	-5.037	-3.852	-2.612				-3.68	-5.15	56.19		**-166.0**
-109	-3.629	-5.637	-4.997	-3.823	-2.592				-3.65	-5.11	56.60		**-164.2**
-108	-3.602	-5.593	-4.957	-3.794	-2.571				-3.62	-5.07	57.01		**-162.4**
-107	-3.574	-5.549	-4.917	-3.764	-2.551				-3.60	-5.03	57.41		**-160.6**
-106	-3.547	-5.505	-4.877	-3.734	-2.531				-3.57	-4.99	57.82		**-158.8**
-105	-3.519	-5.461	-4.836	-3.705	-2.510				-3.54	-4.95	58.23		**-157.0**
-104	-3.491	-5.417	-4.796	-3.675	-2.490				-3.51	-4.91	58.63		**-155.2**
-103	-3.463	-5.372	-4.755	-3.645	-2.469				-3.48	-4.87	59.04		**-153.4**
-102	-3.435	-5.327	-4.714	-3.614	-2.448				-3.46	-4.83	59.44		**-151.6**
-101	-3.407	-5.282	-4.674	-3.584	-2.428				-3.43	-4.79	59.85		**-149.8**
-100	-3.379	-5.237	-4.633	-3.554	-2.407				-3.40	-4.75	60.26		**-148.0**
- 99	-3.350	-5.192	-4.591	-3.523	-2.386				-3.37	-4.71	60.66		**-146.2**
- 98	-3.322	-5.147	-4.550	-3.492	-2.365				-3.34	-4.66	61.07		**-144.4**
- 97	-3.293	-5.101	-4.509	-3.462	-2.344				-3.31	-4.62	61.47		**-142.6**
- 96	-3.264	-5.055	-4.467	-3.431	-2.322				-3.28	-4.58	61.88		**-140.8**
- 95	-3.235	-5.009	-4.425	-3.400	-2.301				-3.25	-4.54	62.28		**-139.0**
- 94	-3.206	-4.963	-4.384	-3.368	-2.280				-3.23	-4.50	62.68		**-137.2**
- 93	-3.177	-4.917	-4.342	-3.337	-2.258				-3.20	-4.45	63.09		**-135.4**
- 92	-3.148	-4.871	-4.300	-3.306	-2.237				-3.17	-4.41	63.49		**-133.6**
- 91	-3.118	-4.824	-4.257	-3.274	-2.215				-3.14	-4.37	63.90		**-131.8**
- 90	-3.089	-4.777	-4.215	-3.243	-2.193				-3.11	-4.33	64.30		**-130.0**
- 89	-3.059	-4.731	-4.173	-3.211	-2.172				-3.08	-4.28	64.70		**-128.2**
- 88	-3.030	-4.684	-4.130	-3.179	-2.150				-3.05	-4.24	65.11		**-126.4**
- 87	-3.000	-4.636	-4.088	-3.147	-2.128				-3.02	-4.20	65.51		**-124.6**
- 86	-2.970	-4.589	-4.045	-3.115	-2.106				-2.99	-4.15	65.91		**-122.8**
- 85	-2.940	-4.542	-4.002	-3.083	-2.084				-2.96	-4.11	66.31		**-121.0**
- 84	-2.910	-4.494	-3.959	-3.050	-2.062				-2.93	-4.06	66.72		**-119.2**
- 83	-2.879	-4.446	-3.916	-3.018	-2.039				-2.90	-4.02	67.12		**-117.4**
- 82	-2.849	-4.398	-3.872	-2.986	-2.017				-2.87	-3.98	67.52		**-115.6**
- 81	-2.818	-4.350	-3.829	-2.953	-1.995				-2.84	-3.93	67.92		**-113.8**
- 80	-2.788	-4.302	-3.786	-2.920	-1.972				-2.81	-3.89	68.33		**-112.0**
- 79	-2.757	-4.254	-3.742	-2.887	-1.950				-2.78	-3.84	68.73		**-110.2**
- 78	-2.726	-4.205	-3.698	-2.854	-1.927				-2.75	-3.80	69.13		**-108.4**
- 77	-2.695	-4.156	-3.654	-2.821	-1.905				-2.72	-3.75	69.53		**-106.6**
- 76	-2.664	-4.107	-3.610	-2.788	-1.882				-2.69	-3.71	69.93		**-104.8**
- 75	-2.633	-4.058	-3.566	-2.755	-1.859				-2.66	-3.66	70.33		**-103.0**
- 74	-2.602	-4.009	-3.522	-2.721	-1.836				-2.62	-3.62	70.73		**-101.2**
- 73	-2.571	-3.960	-3.478	-2.688	-1.813				-2.59	-3.57	71.13		**-99.4**
- 72	-2.539	-3.911	-3.434	-2.654	-1.790				-2.56	-3.53	71.53		**-97.6**
- 71	-2.507	-3.861	-3.389	-2.620	-1.767				-2.53	-3.48	71.93		**-95.8**

°C t90	Type T Cu-CuNi mV	Type E NiCr-CuNi mV	Type J Fe-CuNi mV	Type K NiCr-Ni mV	Type N NiCrSi-NiSi mV	Type S Pt10Rh-Pt mV	Type R Pt13Rh-Pt mV	Type B Pt30Rh-Pt6Rh mV	Type U Cu-CuNi mV	Type L Fe-CuNi mV	Pt100 Ω	Ni100 Ω	°F t90
- 70	-2.476	-3.811	-3.344	-2.587	-1.744				-2.50	-3.44	72.33		**-94.0**
- 69	-2.444	-3.761	-3.300	-2.553	-1.721				-2.47	-3.39	72.73		**-92.2**
- 68	-2.412	-3.711	-3.255	-2.519	-1.698				-2.44	-3.35	73.13		**-90.4**
- 67	-2.380	-3.661	-3.210	-2.485	-1.674				-2.40	-3.30	73.53		**-88.6**
- 66	-2.348	-3.611	-3.165	-2.450	-1.651				-2.37	-3.25	73.93		**-86.8**
- 65	-2.316	-3.561	-3.120	-2.416	-1.627				-2.34	-3.21	74.33		**-85.0**
- 64	-2.283	-3.510	-3.075	-2.382	-1.604				-2.31	-3.16	74.73		**-83.2**
- 63	-2.251	-3.459	-3.029	-2.347	-1.580				-2.28	-3.12	75.13		**-81.4**
- 62	-2.218	-3.408	-2.984	-2.312	-1.557				-2.24	-3.07	75.53		**-79.6**
- 61	-2.186	-3.357	-2.938	-2.278	-1.533				-2.21	-3.02	75.93		**-77.8**
- 60	-2.153	-3.306	-2.893	-2.243	-1.509				-2.18	-2.98	76.33	69.5	**-76.0**
- 59	-2.120	-3.255	-2.847	-2.208	-1.485				-2.15	-2.93	76.73	70.0	**-74.2**
- 58	-2.087	-3.204	-2.801	-2.173	-1.462				-2.11	-2.88	77.12	70.5	**-72.4**
- 57	-2.054	-3.152	-2.755	-2.138	-1.438				-2.08	-2.84	77.52	70.9	**-70.6**
- 56	-2.021	-3.100	-2.709	-2.103	-1.414				-2.05	-2.79	77.92	71.4	**-68.8**
- 55	-1.987	-3.048	-2.663	-2.067	-1.390				-2.02	-2.74	78.32	71.9	**-67.0**
- 54	-1.954	-2.996	-2.617	-2.032	-1.366				-1.98	-2.70	78.72	72.3	**-65.2**
- 53	-1.920	-2.944	-2.571	-1.996	-1.341				-1.95	-2.65	79.11	72.8	**-63.4**
- 52	-1.887	-2.892	-2.524	-1.961	-1.317				-1.92	-2.60	79.51	73.3	**-61.6**
- 51	-1.853	-2.840	-2.478	-1.925	-1.293				-1.88	-2.56	79.91	73.8	**-59.8**
- 50	-1.819	-2.787	-2.431	-1.889	-1.269	-0.236	-0.226		-1.85	-2.51	80.31	74.3	**-58.0**
- 49	-1.785	-2.735	-2.385	-1.854	-1.244	-0.232	-0.223		-1.81	-2.46	80.70	74.7	**-56.2**
- 48	-1.751	-2.682	-2.338	-1.818	-1.220	-0.228	-0.219		-1.78	-2.41	81.10	75.2	**-54.4**
- 47	-1.717	-2.629	-2.291	-1.782	-1.195	-0.224	-0.215		-1.74	-2.36	81.50	75.7	**-52.6**
- 46	-1.683	-2.576	-2.244	-1.745	-1.171	-0.219	-0.211		-1.71	-2.32	81.89	76.2	**-50.8**
- 45	-1.648	-2.523	-2.197	-1.709	-1.146	-0.215	-0.208		-1.67	-2.27	82.29	76.7	**-49.0**
- 44	-1.614	-2.469	-2.150	-1.673	-1.122	-0.211	-0.204		-1.64	-2.22	82.69	77.2	**-47.2**
- 43	-1.579	-2.416	-2.103	-1.637	-1.097	-0.207	-0.200		-1.60	-2.17	83.08	77.7	**-45.4**
- 42	-1.545	-2.362	-2.055	-1.600	-1.072	-0.203	-0.196		-1.57	-2.12	83.48	78.1	**-43.6**
- 41	-1.510	-2.309	-2.008	-1.564	-1.048	-0.199	-0.192		-1.53	-2.08	83.87	78.6	**-41.8**
- 40	-1.475	-2.255	-1.961	-1.527	-1.023	-0.194	-0.188		-1.50	-2.03	84.27	79.1	**-40.0**
- 39	-1.440	-2.201	-1.913	-1.490	-0.998	-0.190	-0.184		-1.46	-1.98	84.67	79.6	**-38.2**
- 38	-1.405	-2.147	-1.865	-1.453	-0.973	-0.186	-0.180		-1.43	-1.93	85.06	80.1	**-36.4**
- 37	-1.370	-2.093	-1.818	-1.417	-0.948	-0.181	-0.175		-1.39	-1.88	85.46	80.6	**-34.6**
- 36	-1.335	-2.038	-1.770	-1.380	-0.923	-0.177	-0.171		-1.36	-1.83	85.85	81.1	**-32.8**
- 35	-1.299	-1.984	-1.722	-1.343	-0.898	-0.173	-0.167		-1.32	-1.78	86.25	81.6	**-31.0**
- 34	-1.264	-1.929	-1.674	-1.305	-0.873	-0.168	-0.163		-1.28	-1.73	86.64	82.1	**-29.2**
- 33	-1.228	-1.874	-1.626	-1.268	-0.848	-0.164	-0.158		-1.25	-1.68	87.04	82.6	**-27.4**
- 32	-1.192	-1.820	-1.578	-1.231	-0.823	-0.159	-0.154		-1.21	-1.63	87.43	83.1	**-25.6**
- 31	-1.157	-1.765	-1.530	-1.194	-0.798	-0.155	-0.150		-1.18	-1.58	87.83	83.6	**-23.8**
- 30	-1.121	-1.709	-1.482	-1.156	-0.772	-0.150	-0.145		-1.14	-1.53	88.22	84.1	**-22.0**
- 29	-1.085	-1.654	-1.433	-1.119	-0.747	-0.146	-0.141		-1.10	-1.48	88.62	84.7	**-20.2**
- 28	-1.049	-1.599	-1.385	-1.081	-0.722	-0.141	-0.137		-1.07	-1.43	89.01	85.2	**-18.4**
- 27	-1.013	-1.543	-1.336	-1.043	-0.696	-0.136	-0.132		-1.03	-1.38	89.40	85.7	**-16.6**
- 26	-0.976	-1.488	-1.288	-1.006	-0.671	-0.132	-0.128		-0.99	-1.32	89.80	86.2	**-14.8**
- 25	-0.940	-1.432	-1.239	-0.968	-0.646	-0.127	-0.123		-0.95	-1.27	90.19	86.7	**-13.0**
- 24	-0.904	-1.376	-1.190	-0.930	-0.620	-0.122	-0.119		-0.92	-1.22	90.59	87.2	**-11.2**
- 23	-0.867	-1.320	-1.142	-0.892	-0.595	-0.117	-0.114		-0.88	-1.17	90.98	87.7	**-9.4**
- 22	-0.830	-1.264	-1.093	-0.854	-0.569	-0.113	-0.109		-0.84	-1.12	91.37	88.3	**-7.6**
- 21	-0.794	-1.208	-1.044	-0.816	-0.544	-0.108	-0.105		-0.81	-1.07	91.77	88.8	**-5.8**

°C t90	Type T Cu-CuNi mV	Type E NiCr-CuNi mV	Type J Fe-CuNi mV	Type K NiCr-Ni mV	Type N NiCrSi-NiSi mV	Type S Pt10Rh-Pt mV	Type R Pt13Rh-Pt mV	Type B Pt30Rh-Pt6Rh mV	Type U Cu-CuNi mV	Type L Fe-CuNi mV	Pt100 Ω	Ni100 Ω	°F t90
- 20	-0.757	-1.152	-0.995	-0.778	-0.518	-0.103	-0.100		-0.77	-1.02	92.16	89.3	**-4.0**
- 19	-0.720	-1.095	-0.946	-0.739	-0.492	-0.098	-0.095		-0.73	-0.97	92.55	89.8	**-2.2**
- 18	-0.683	-1.039	-0.896	-0.701	-0.467	-0.093	-0.091		-0.69	-0.92	92.95	90.3	**-0.4**
- 17	-0.646	-0.982	-0.847	-0.663	-0.441	-0.088	-0.086		-0.66	-0.87	93.34	90.9	**1.4**
- 16	-0.608	-0.925	-0.798	-0.624	-0.415	-0.083	-0.081		-0.62	-0.81	93.73	91.4	**3.2**
- 15	-0.571	-0.868	-0.749	-0.586	-0.390	-0.078	-0.076		-0.58	-0.76	94.12	91.9	**5.0**
- 14	-0.534	-0.811	-0.699	-0.547	-0.364	-0.073	-0.071		-0.54	-0.71	94.52	92.5	**6.8**
- 13	-0.496	-0.754	-0.650	-0.508	-0.338	-0.068	-0.066		-0.50	-0.66	94.91	93.0	**8.6**
- 12	-0.459	-0.697	-0.600	-0.470	-0.312	-0.063	-0.061		-0.47	-0.61	95.30	93.5	**10.4**
- 11	-0.421	-0.639	-0.550	-0.431	-0.286	-0.058	-0.056		-0.43	-0.56	95.69	94.0	**12.2**
- 10	-0.383	-0.582	-0.501	-0.392	-0.260	-0.053	-0.051		-0.39	-0.51	96.09	94.6	**14.0**
- 9	-0.345	-0.524	-0.451	-0.353	-0.234	-0.048	-0.046		-0.35	-0.46	96.48	95.1	**15.8**
- 8	-0.307	-0.466	-0.401	-0.314	-0.209	-0.042	-0.041		-0.31	-0.41	96.87	95.7	**17.6**
- 7	-0.269	-0.408	-0.351	-0.275	-0.183	-0.037	-0.036		-0.27	-0.36	97.26	96.2	**19.4**
- 6	-0.231	-0.350	-0.301	-0.236	-0.157	-0.032	-0.031		-0.23	-0.31	97.65	96.7	**21.2**
- 5	-0.193	-0.292	-0.251	-0.197	-0.131	-0.027	-0.026		-0.19	-0.25	98.04	97.3	**23.0**
- 4	-0.154	-0.234	-0.201	-0.157	-0.104	-0.021	-0.021		-0.16	-0.20	98.44	97.8	**24.8**
- 3	-0.116	-0.176	-0.151	-0.118	-0.078	-0.016	-0.016		-0.12	-0.15	98.83	98.4	**26.6**
- 2	-0.077	-0.117	-0.101	-0.079	-0.052	-0.011	-0.011		-0.08	-0.10	99.22	98.9	**28.4**
- 1	-0.039	-0.059	-0.050	-0.039	-0.026	-0.005	-0.005		-0.04	-0.05	99.61	99.5	**30.2**
0	0.000	0.000	0.000	0.000	0.000	0.000	0.000	0.000	0.00	0.00	100.00	100.0	**32.0**
1	0.039	0.059	0.050	0.039	0.026	0.005	0.005	0.000	0.04	0.05	100.39	100.5	**33.8**
2	0.078	0.118	0.101	0.079	0.052	0.011	0.011	0.000	0.08	0.10	100.78	101.1	**35.6**
3	0.117	0.176	0.151	0.119	0.078	0.016	0.016	-0.001	0.12	0.16	101.17	101.7	**37.4**
4	0.156	0.235	0.202	0.158	0.104	0.022	0.021	-0.001	0.16	0.21	101.56	102.2	**39.2**
5	0.195	0.294	0.253	0.198	0.130	0.027	0.027	-0.001	0.20	0.26	101.95	102.8	**41.0**
6	0.234	0.354	0.303	0.238	0.156	0.033	0.032	-0.001	0.24	0.31	102.34	103.3	**42.8**
7	0.273	0.413	0.354	0.277	0.182	0.038	0.038	-0.001	0.28	0.36	102.73	103.9	**44.6**
8	0.312	0.472	0.405	0.317	0.208	0.044	0.043	-0.002	0.32	0.42	103.12	104.4	**46.4**
9	0.352	0.532	0.456	0.357	0.235	0.050	0.049	-0.002	0.36	0.47	103.51	105.0	**48.2**
10	0.391	0.591	0.507	0.397	0.261	0.055	0.054	-0.002	0.40	0.52	103.90	105.6	**50.0**
11	0.431	0.651	0.558	0.437	0.287	0.061	0.060	-0.002	0.44	0.57	104.29	106.1	**51.8**
12	0.470	0.711	0.609	0.477	0.313	0.067	0.065	-0.002	0.48	0.63	104.68	106.7	**53.6**
13	0.510	0.770	0.660	0.517	0.340	0.072	0.071	-0.002	0.52	0.68	105.07	107.2	**55.4**
14	0.549	0.830	0.711	0.557	0.366	0.078	0.077	-0.002	0.56	0.73	105.46	107.8	**57.2**
15	0.589	0.890	0.762	0.597	0.393	0.084	0.082	-0.002	0.60	0.78	105.85	108.4	**59.0**
16	0.629	0.950	0.814	0.637	0.419	0.090	0.088	-0.002	0.64	0.84	106.24	109.0	**60.8**
17	0.669	1.010	0.865	0.677	0.446	0.095	0.094	-0.002	0.68	0.89	106.63	109.5	**62.6**
18	0.709	1.071	0.916	0.718	0.472	0.101	0.100	-0.003	0.72	0.94	107.02	110.1	**64.4**
19	0.749	1.131	0.968	0.758	0.499	0.107	0.105	-0.003	0.76	1.00	107.41	110.7	**66.2**
20	0.790	1.192	1.019	0.798	0.525	0.113	0.111	-0.003	0.80	1.05	107.79	111.2	**68.0**
21	0.830	1.252	1.071	0.838	0.552	0.119	0.117	-0.003	0.84	1.10	108.18	111.8	**69.8**
22	0.870	1.313	1.122	0.879	0.578	0.125	0.123	-0.003	0.88	1.16	108.57	112.4	**71.6**
23	0.911	1.373	1.174	0.919	0.605	0.131	0.129	-0.003	0.92	1.21	108.96	113.0	**73.4**
24	0.951	1.434	1.226	0.960	0.632	0.137	0.135	-0.003	0.96	1.26	109.35	113.5	**75.2**
25	0.992	1.495	1.277	1.000	0.659	0.143	0.141	-0.002	1.00	1.31	109.73	114.1	**77.0**
26	1.033	1.556	1.329	1.041	0.685	0.149	0.147	-0.002	1.05	1.37	110.12	114.7	**78.8**
27	1.074	1.617	1.381	1.081	0.712	0.155	0.153	-0.002	1.09	1.42	110.51	115.3	**80.6**
28	1.114	1.678	1.433	1.122	0.739	0.161	0.159	-0.002	1.13	1.47	110.90	115.9	**82.4**
29	1.155	1.740	1.485	1.163	0.766	0.167	0.165	-0.002	1.17	1.53	111.29	116.5	**84.2**
30	1.196	1.801	1.537	1.203	0.793	0.173	0.171	-0.002	1.21	1.58	111.67	117.1	**86.0**

°C t90	Type T Cu-CuNi mV	Type E NiCr-CuNi mV	Type J Fe-CuNi mV	Type K NiCr-Ni mV	Type N NiCrSi-NiSi mV	Type S Pt10Rh-Pt mV	Type R Pt13Rh-Pt mV	Type B Pt30Rh-Pt6Rh mV	Type U Cu-CuNi mV	Type L Fe-CuNi mV	Pt100 Ω	Ni100 Ω	°F t90
31	1.238	1.862	1.589	1.244	0.820	0.179	0.177	-0.002	1.25	1.63	112.06	117.6	**87.8**
32	1.279	1.924	1.641	1.285	0.847	0.185	0.183	-0.002	1.29	1.69	112.45	118.2	**89.6**
33	1.320	1.986	1.693	1.326	0.874	0.191	0.189	-0.002	1.34	1.74	112.83	118.8	**91.4**
34	1.362	2.047	1.745	1.366	0.901	0.197	0.195	-0.002	1.38	1.79	113.22	119.4	**93.2**
35	1.403	2.109	1.797	1.407	0.928	0.204	0.201	-0.001	1.42	1.84	113.61	120.0	**95.0**
36	1.445	2.171	1.849	1.448	0.955	0.210	0.207	-0.001	1.46	1.90	114.00	120.6	**96.8**
37	1.486	2.233	1.902	1.489	0.983	0.216	0.214	-0.001	1.50	1.95	114.38	121.2	**98.6**
38	1.528	2.295	1.954	1.530	1.010	0.222	0.220	-0.001	1.55	2.00	114.77	121.8	**100.4**
39	1.570	2.357	2.006	1.571	1.037	0.229	0.226	-0.001	1.59	2.06	115.15	122.4	**102.2**
40	1.612	2.420	2.059	1.612	1.065	0.235	0.232	0.000	1.63	2.11	115.54	123.0	**104.0**
41	1.654	2.482	2.111	1.653	1.092	0.241	0.239	0.000	1.67	2.16	115.93	123.6	**105.8**
42	1.696	2.545	2.164	1.694	1.119	0.248	0.245	0.000	1.71	2.22	116.31	124.2	**107.6**
43	1.738	2.607	2.216	1.735	1.147	0.254	0.251	0.000	1.76	2.27	116.70	124.8	**109.4**
44	1.780	2.670	2.269	1.776	1.174	0.260	0.258	0.000	1.80	2.33	117.08	125.4	**111.2**
45	1.823	2.733	2.322	1.817	1.202	0.267	0.264	0.001	1.84	2.38	117.47	126.0	**113.0**
46	1.865	2.795	2.374	1.858	1.229	0.273	0.271	0.001	1.88	2.43	117.86	126.7	**114.8**
47	1.908	2.858	2.427	1.899	1.257	0.280	0.277	0.001	1.92	2.49	118.24	127.3	**116.6**
48	1.950	2.921	2.480	1.941	1.284	0.286	0.284	0.002	1.97	2.54	118.63	127.9	**118.4**
49	1.993	2.984	2.532	1.982	1.312	0.292	0.290	0.002	2.01	2.60	119.01	128.5	**120.2**
50	2.036	3.048	2.585	2.023	1.340	0.299	0.296	0.002	2.05	2.65	119.40	129.1	**122.0**
51	2.079	3.111	2.638	2.064	1.368	0.305	0.303	0.003	2.09	2.70	119.78	129.7	**123.8**
52	2.122	3.174	2.691	2.106	1.395	0.312	0.310	0.003	2.14	2.76	120.17	130.3	**125.6**
53	2.165	3.238	2.744	2.147	1.423	0.319	0.316	0.003	2.18	2.81	120.55	131.0	**127.4**
54	2.208	3.301	2.797	2.188	1.451	0.325	0.323	0.004	2.22	2.87	120.94	131.6	**129.2**
55	2.251	3.365	2.850	2.230	1.479	0.332	0.329	0.004	2.26	2.92	121.32	132.2	**131.0**
56	2.294	3.429	2.903	2.271	1.507	0.338	0.336	0.004	2.31	2.97	121.71	132.8	**132.8**
57	2.338	3.492	2.956	2.312	1.535	0.345	0.343	0.005	2.35	3.03	122.09	133.5	**134.6**
58	2.381	3.556	3.009	2.354	1.563	0.352	0.349	0.005	2.39	3.08	122.47	134.1	**136.4**
59	2.425	3.620	3.062	2.395	1.591	0.358	0.356	0.006	2.44	3.14	122.86	134.7	**138.2**
60	2.468	3.685	3.116	2.436	1.619	0.365	0.363	0.006	2.48	3.19	123.24	135.3	**140.0**
61	2.512	3.749	3.169	2.478	1.647	0.372	0.369	0.007	2.52	3.24	123.63	136.0	**141.8**
62	2.556	3.813	3.222	2.519	1.675	0.378	0.376	0.007	2.57	3.30	124.01	136.6	**143.6**
63	2.600	3.877	3.275	2.561	1.703	0.385	0.383	0.008	2.61	3.35	124.39	137.2	**145.4**
64	2.643	3.942	3.329	2.602	1.732	0.392	0.390	0.008	2.65	3.41	124.78	137.9	**147.2**
65	2.687	4.006	3.382	2.644	1.760	0.399	0.397	0.009	2.69	3.46	125.16	138.5	**149.0**
66	2.732	4.071	3.436	2.685	1.788	0.405	0.403	0.009	2.74	3.51	125.54	139.2	**150.8**
67	2.776	4.136	3.489	2.727	1.817	0.412	0.410	0.010	2.78	3.57	125.93	139.8	**152.6**
68	2.820	4.200	3.543	2.768	1.845	0.419	0.417	0.010	2.82	3.62	126.31	140.4	**154.4**
69	2.864	4.265	3.596	2.810	1.873	0.426	0.424	0.011	2.87	3.68	126.69	141.1	**156.2**
70	2.909	4.330	3.650	2.851	1.902	0.433	0.431	0.011	2.91	3.73	127.08	141.7	**158.0**
71	2.953	4.395	3.703	2.893	1.930	0.440	0.438	0.012	2.95	3.78	127.46	142.4	**159.8**
72	2.998	4.460	3.757	2.934	1.959	0.446	0.445	0.012	3.00	3.84	127.84	143.0	**161.6**
73	3.043	4.526	3.810	2.976	1.988	0.453	0.452	0.013	3.04	3.89	128.22	143.7	**163.4**
74	3.087	4.591	3.864	3.017	2.016	0.460	0.459	0.014	3.09	3.95	128.61	144.3	**165.2**
75	3.132	4.656	3.918	3.059	2.045	0.467	0.466	0.014	3.13	4.00	128.99	145.0	**167.0**
76	3.177	4.722	3.971	3.100	2.074	0.474	0.473	0.015	3.17	4.05	129.37	145.6	**168.8**
77	3.222	4.788	4.025	3.142	2.102	0.481	0.480	0.015	3.22	4.11	129.75	146.3	**170.6**
78	3.267	4.853	4.079	3.184	2.131	0.488	0.487	0.016	3.26	4.16	130.13	146.9	**172.4**
79	3.312	4.919	4.133	3.225	2.160	0.495	0.494	0.017	3.31	4.22	130.52	147.6	**174.2**
80	3.358	4.985	4.187	3.267	2.189	0.502	0.501	0.017	3.35	4.27	130.90	148.3	**176.0**

°C t90	Type T Cu-CuNi mV	Type E NiCr-CuNi mV	Type J Fe-CuNi mV	Type K NiCr-Ni mV	Type N NiCrSi-NiSi mV	Type S Pt10Rh-Pt mV	Type R Pt13Rh-Pt mV	Type B Pt30Rh-Pt6Rh mV	Type U Cu-CuNi mV	Type L Fe-CuNi mV	Pt100 Ω	Ni100 Ω	°F t90
81	3.403	5.051	4.240	3.308	2.218	0.509	0.508	0.018	3.39	4.32	131.28	148.9	**177.8**
82	3.448	5.117	4.294	3.350	2.247	0.516	0.516	0.019	3.44	4.38	131.66	149.6	**179.6**
83	3.494	5.183	4.348	3.391	2.276	0.523	0.523	0.020	3.48	4.43	132.04	150.2	**181.4**
84	3.539	5.249	4.402	3.433	2.305	0.530	0.530	0.020	3.53	4.49	132.42	150.9	**183.2**
85	3.585	5.315	4.456	3.474	2.334	0.538	0.537	0.021	3.57	4.54	132.80	151.6	**185.0**
86	3.631	5.382	4.510	3.516	2.363	0.545	0.544	0.022	3.62	4.60	133.18	152.2	**186.8**
87	3.677	5.448	4.564	3.557	2.392	0.552	0.552	0.022	3.66	4.65	133.57	152.9	**188.6**
88	3.722	5.514	4.618	3.599	2.421	0.559	0.559	0.023	3.71	4.71	133.95	153.6	**190.4**
89	3.768	5.581	4.672	3.640	2.450	0.566	0.566	0.024	3.75	4.77	134.33	154.3	**192.2**
90	3.814	5.648	4.726	3.682	2.480	0.573	0.573	0.025	3.80	4.82	134.71	154.9	**194.0**
91	3.860	5.714	4.781	3.723	2.509	0.580	0.581	0.026	3.84	4.87	135.09	155.6	**195.8**
92	3.907	5.781	4.835	3.765	2.538	0.588	0.588	0.026	3.89	4.93	135.47	156.3	**197.6**
93	3.953	5.848	4.889	3.806	2.568	0.595	0.595	0.027	3.93	4.98	135.85	157.0	**199.4**
94	3.999	5.915	4.943	3.848	2.597	0.602	0.603	0.028	3.98	5.04	136.23	157.7	**201.2**
95	4.046	5.982	4.997	3.889	2.626	0.609	0.610	0.029	4.02	5.09	136.61	158.3	**203.0**
96	4.092	6.049	5.052	3.931	2.656	0.617	0.618	0.030	4.07	5.15	136.99	159.0	**204.8**
97	4.138	6.117	5.106	3.972	2.685	0.624	0.625	0.031	4.11	5.20	137.37	159.7	**206.6**
98	4.185	6.184	5.160	4.013	2.715	0.631	0.632	0.031	4.16	5.26	137.75	160.4	**208.4**
99	4.232	6.251	5.215	4.055	2.744	0.639	0.640	0.032	4.20	5.32	138.13	161.1	**210.2**
100	4.279	6.319	5.269	4.096	2.774	0.646	0.647	0.033	4.25	5.37	138.51	161.8	**212.0**
101	4.325	6.386	5.323	4.138	2.804	0.653	0.655	0.034	4.30	5.42	138.88	162.5	**213.8**
102	4.372	6.454	5.378	4.179	2.833	0.661	0.662	0.035	4.34	5.48	139.26	163.2	**215.6**
103	4.419	6.522	5.432	4.220	2.863	0.668	0.670	0.036	4.39	5.53	139.64	163.9	**217.4**
104	4.466	6.590	5.487	4.262	2.893	0.675	0.677	0.037	4.43	5.59	140.02	164.6	**219.2**
105	4.513	6.658	5.541	4.303	2.923	0.683	0.685	0.038	4.48	5.64	140.40	165.3	**221.0**
106	4.561	6.725	5.595	4.344	2.953	0.690	0.693	0.039	4.53	5.70	140.78	166.0	**222.8**
107	4.608	6.794	5.650	4.385	2.983	0.698	0.700	0.040	4.57	5.75	141.16	166.7	**224.6**
108	4.655	6.862	5.705	4.427	3.012	0.705	0.708	0.041	4.62	5.81	141.54	167.4	**226.4**
109	4.702	6.930	5.759	4.468	3.042	0.713	0.715	0.042	4.66	5.87	141.91	168.1	**228.2**
110	4.750	6.998	5.814	4.509	3.072	0.720	0.723	0.043	4.71	5.92	142.29	168.8	**230.0**
111	4.798	7.066	5.868	4.550	3.102	0.727	0.731	0.044	4.76	5.97	142.67	169.5	**231.8**
112	4.845	7.135	5.923	4.591	3.133	0.735	0.738	0.045	4.80	6.03	143.05	170.2	**233.6**
113	4.893	7.203	5.977	4.633	3.163	0.743	0.746	0.046	4.85	6.08	143.43	170.9	**235.4**
114	4.941	7.272	6.032	4.674	3.193	0.750	0.754	0.047	4.90	6.14	143.80	171.6	**237.2**
115	4.988	7.341	6.087	4.715	3.223	0.758	0.761	0.048	4.94	6.19	144.18	172.4	**239.0**
116	5.036	7.409	6.141	4.756	3.253	0.765	0.769	0.049	4.99	6.25	144.56	173.1	**240.8**
117	5.084	7.478	6.196	4.797	3.283	0.773	0.777	0.050	5.04	6.30	144.94	173.8	**242.6**
118	5.132	7.547	6.251	4.838	3.314	0.780	0.785	0.051	5.09	6.36	145.31	174.5	**244.4**
119	5.180	7.616	6.306	4.879	3.344	0.788	0.792	0.052	5.13	6.42	145.69	175.2	**246.2**
120	5.228	7.685	6.360	4.920	3.374	0.795	0.800	0.053	5.18	6.47	146.07	176.0	**248.0**
121	5.277	7.754	6.415	4.961	3.405	0.803	0.808	0.055	5.23	6.53	146.44	176.7	**249.8**
122	5.325	7.823	6.470	5.002	3.435	0.811	0.816	0.056	5.27	6.58	146.82	177.4	**251.6**
123	5.373	7.892	6.525	5.043	3.466	0.818	0.824	0.057	5.32	6.64	147.20	178.2	**253.4**
124	5.422	7.962	6.579	5.084	3.496	0.826	0.832	0.058	5.37	6.69	147.57	178.9	**255.2**
125	5.470	8.031	6.634	5.124	3.527	0.834	0.839	0.059	5.41	6.75	147.95	179.6	**257.0**
126	5.519	8.101	6.689	5.165	3.557	0.841	0.847	0.060	5.46	6.81	148.33	180.4	**258.8**
127	5.567	8.170	6.744	5.206	3.588	0.849	0.855	0.062	5.51	6.86	148.70	181.1	**260.6**
128	5.616	8.240	6.799	5.247	3.619	0.857	0.863	0.063	5.56	6.92	149.08	181.8	**262.4**
129	5.665	8.309	6.854	5.288	3.649	0.865	0.871	0.064	5.60	6.97	149.46	182.6	**264.2**
130	5.714	8.379	6.909	5.328	3.680	0.872	0.879	0.065	5.65	7.03	149.83	183.3	**266.0**

°C t90	Type T Cu-CuNi mV	Type E NiCr-CuNi mV	Type J Fe-CuNi mV	Type K NiCr-Ni mV	Type N NiCrSi-NiSi mV	Type S Pt10Rh-Pt mV	Type R Pt13Rh-Pt mV	Type B Pt30Rh-Pt6Rh mV	Type U Cu-CuNi mV	Type L Fe-CuNi mV	Pt100 Ω	Ni100 Ω	°F t90
131	5.763	8.449	6.964	5.369	3.711	0.880	0.887	0.066	5.70	7.09	150.21	184.1	**267.8**
132	5.812	8.519	7.019	5.410	3.742	0.888	0.895	0.068	5.75	7.14	150.58	184.8	**269.6**
133	5.861	8.589	7.074	5.450	3.772	0.896	0.903	0.069	5.79	7.20	150.96	185.6	**271.4**
134	5.910	8.659	7.129	5.491	3.803	0.903	0.911	0.070	5.84	7.25	151.33	186.3	**273.2**
135	5.959	8.729	7.184	5.532	3.834	0.911	0.919	0.072	5.89	7.31	151.71	187.1	**275.0**
136	6.008	8.799	7.239	5.572	3.865	0.919	0.927	0.073	5.94	7.37	152.08	187.8	**276.8**
137	6.057	8.869	7.294	5.613	3.896	0.927	0.935	0.074	5.99	7.42	152.46	188.6	**278.6**
138	6.107	8.940	7.349	5.653	3.927	0.935	0.943	0.075	6.03	7.48	152.83	189.4	**280.4**
139	6.156	9.010	7.404	5.694	3.958	0.942	0.951	0.077	6.08	7.53	153.21	190.1	**282.2**
140	6.206	9.081	7.459	5.735	3.989	0.950	0.959	0.078	6.13	7.59	153.58	190.9	**284.0**
141	6.255	9.151	7.514	5.775	4.020	0.958	0.967	0.079	6.18	7.65	153.96	191.7	**285.8**
142	6.305	9.222	7.569	5.815	4.051	0.966	0.976	0.081	6.23	7.70	154.33	192.4	**287.6**
143	6.355	9.292	7.624	5.856	4.083	0.974	0.984	0.082	6.28	7.76	154.71	193.2	**289.4**
144	6.404	9.363	7.679	5.896	4.114	0.982	0.992	0.084	6.33	7.81	155.08	194.0	**291.2**
145	6.454	9.434	7.734	5.937	4.145	0.990	1.000	0.085	6.37	7.87	155.46	194.7	**293.0**
146	6.504	9.505	7.789	5.977	4.176	0.998	1.008	0.086	6.42	7.93	155.83	195.5	**294.8**
147	6.554	9.576	7.844	6.017	4.208	1.006	1.016	0.088	6.47	7.98	156.20	196.3	**296.6**
148	6.604	9.647	7.900	6.058	4.239	1.013	1.025	0.089	6.52	8.04	156.58	197.1	**298.4**
149	6.654	9.718	7.955	6.098	4.270	1.021	1.033	0.091	6.57	8.09	156.95	197.9	**300.2**
150	6.704	9.789	8.010	6.138	4.302	1.029	1.041	0.092	6.62	8.15	157.33	198.6	**302.0**
151	6.754	9.860	8.065	6.179	4.333	1.037	1.049	0.094	6.67	8.21	157.70	199.4	**303.8**
152	6.805	9.931	8.120	6.219	4.365	1.045	1.058	0.095	6.72	8.26	158.07	200.2	**305.6**
153	6.855	10.003	8.175	6.259	4.396	1.053	1.066	0.096	6.77	8.32	158.45	201.0	**307.4**
154	6.905	10.074	8.231	6.299	4.428	1.061	1.074	0.098	6.82	8.37	158.82	201.8	**309.2**
155	6.956	10.145	8.286	6.339	4.459	1.069	1.082	0.099	6.87	8.43	159.19	202.6	**311.0**
156	7.006	10.217	8.341	6.380	4.491	1.077	1.091	0.101	6.92	8.49	159.56	203.4	**312.8**
157	7.057	10.288	8.396	6.420	4.523	1.085	1.099	0.102	6.97	8.54	159.94	204.2	**314.6**
158	7.107	10.360	8.452	6.460	4.554	1.094	1.107	0.104	7.02	8.60	160.31	205.0	**316.4**
159	7.158	10.432	8.507	6.500	4.586	1.102	1.116	0.106	7.07	8.65	160.68	205.8	**318.2**
160	7.209	10.503	8.562	6.540	4.618	1.110	1.124	0.107	7.12	8.71	161.05	206.6	**320.0**
161	7.260	10.575	8.618	6.580	4.650	1.118	1.132	0.109	7.17	8.77	161.43	207.4	**321.8**
162	7.310	10.647	8.673	6.620	4.681	1.126	1.141	0.110	7.22	8.82	161.80	208.2	**323.6**
163	7.361	10.719	8.728	6.660	4.713	1.134	1.149	0.112	7.27	8.88	162.17	209.0	**325.4**
164	7.412	10.791	8.783	6.701	4.745	1.142	1.158	0.113	7.33	8.93	162.54	209.8	**327.2**
165	7.463	10.863	8.839	6.741	4.777	1.150	1.166	0.115	7.37	8.99	162.91	210.6	**329.0**
166	7.515	10.935	8.894	6.781	4.809	1.158	1.175	0.117	7.43	9.05	163.29	211.5	**330.8**
167	7.566	11.007	8.949	6.821	4.841	1.167	1.183	0.118	7.48	9.10	163.66	212.3	**332.6**
168	7.617	11.080	9.005	6.861	4.873	1.175	1.191	0.120	7.53	9.16	164.03	213.1	**334.4**
169	7.668	11.152	9.060	6.901	4.905	1.183	1.200	0.122	7.58	9.21	164.40	213.9	**336.2**
170	7.720	11.224	9.115	6.941	4.937	1.191	1.208	0.123	7.63	9.27	164.77	214.8	**338.0**
171	7.771	11.297	9.171	6.981	4.969	1.199	1.217	0.125	7.68	9.33	165.14	215.6	**339.8**
172	7.823	11.369	9.226	7.021	5.001	1.207	1.225	0.127	7.73	9.38	165.51	216.4	**341.6**
173	7.874	11.442	9.282	7.060	5.033	1.216	1.234	0.128	7.79	9.44	165.89	217.3	**343.4**
174	7.926	11.514	9.337	7.100	5.066	1.224	1.242	0.130	7.84	9.49	166.26	218.1	**345.2**
175	7.977	11.587	9.392	7.140	5.098	1.232	1.251	0.132	7.89	9.55	166.63	218.9	**347.0**
176	8.029	11.660	9.448	7.180	5.130	1.240	1.260	0.134	7.94	9.61	167.00	219.8	**348.8**
177	8.081	11.733	9.503	7.220	5.162	1.249	1.268	0.135	7.99	9.66	167.37	220.6	**350.6**
178	8.133	11.805	9.559	7.260	5.195	1.257	1.277	0.137	8.05	9.72	167.74	221.5	**352.4**
179	8.185	11.878	9.614	7.300	5.227	1.265	1.285	0.139	8.10	9.77	168.11	222.3	**354.2**
180	8.237	11.951	9.669	7.340	5.259	1.273	1.294	0.141	8.15	9.83	168.48	223.2	**356.0**

°C t90	Type T Cu-CuNi mV	Type E NiCr-CuNi mV	Type J Fe-CuNi mV	Type K NiCr-Ni mV	Type N NiCrSi-NiSi mV	Type S Pt10Rh-Pt mV	Type R Pt13Rh-Pt mV	Type B Pt30Rh-Pt6Rh mV	Type U Cu-CuNi mV	Type L Fe-CuNi mV	Pt100 Ω	Ni100 Ω	°F t90
181	8.289	12.024	9.725	7.380	5.292	1.282	1.303	0.142	8.20	9.89	168.85	224.0	**357.8**
182	8.341	12.097	9.780	7.420	5.324	1.290	1.311	0.144	8.25	9.94	169.22	224.9	**359.6**
183	8.393	12.170	9.836	7.460	5.357	1.298	1.320	0.146	8.31	10.00	169.59	225.7	**361.4**
184	8.445	12.243	9.891	7.500	5.389	1.307	1.329	0.148	8.36	10.05	169.96	226.6	**363.2**
185	8.497	12.317	9.947	7.540	5.422	1.315	1.337	0.150	8.41	10.11	170.33	227.4	**365.0**
186	8.550	12.390	10.002	7.579	5.454	1.323	1.346	0.151	8.46	10.17	170.70	228.3	**366.8**
187	8.602	12.463	10.057	7.619	5.487	1.332	1.355	0.153	8.51	10.22	171.07	229.2	**368.6**
188	8.654	12.537	10.113	7.659	5.520	1.340	1.363	0.155	8.57	10.28	171.43	230.0	**370.4**
189	8.707	12.610	10.168	7.699	5.552	1.348	1.372	0.157	8.62	10.33	171.80	230.9	**372.2**
190	8.759	12.684	10.224	7.739	5.585	1.357	1.381	0.159	8.67	10.39	172.17	231.8	**374.0**
191	8.812	12.757	10.279	7.779	5.618	1.365	1.389	0.161	8.72	10.45	172.54	232.7	**375.8**
192	8.865	12.831	10.335	7.819	5.650	1.373	1.398	0.163	8.78	10.50	172.91	233.5	**377.6**
193	8.917	12.904	10.390	7.859	5.683	1.382	1.407	0.165	8.83	10.56	173.28	234.4	**379.4**
194	8.970	12.978	10.446	7.899	5.716	1.390	1.416	0.166	8.88	10.61	173.65	235.3	**381.2**
195	9.023	13.052	10.501	7.939	5.749	1.399	1.425	0.168	8.93	10.67	174.02	236.2	**383.0**
196	9.076	13.126	10.557	7.979	5.782	1.407	1.433	0.170	8.99	10.73	174.38	237.1	**384.8**
197	9.129	13.199	10.612	8.019	5.815	1.415	1.442	0.172	9.04	10.78	174.75	238.0	**386.6**
198	9.182	13.273	10.668	8.059	5.847	1.424	1.451	0.174	9.09	10.84	175.12	238.9	**388.4**
199	9.235	13.347	10.723	8.099	5.880	1.432	1.460	0.176	9.15	10.89	175.49	239.8	**390.2**
200	9.288	13.421	10.779	8.138	5.913	1.441	1.469	0.178	9.20	10.95	175.86	240.7	**392.0**
201	9.341	13.495	10.834	8.178	5.946	1.449	1.477	0.180	9.25	11.01	176.22	241.6	**393.8**
202	9.395	13.569	10.890	8.218	5.979	1.458	1.486	0.182	9.31	11.06	176.59	242.5	**395.6**
203	9.448	13.644	10.945	8.258	6.013	1.466	1.495	0.184	9.36	11.12	176.96	243.4	**397.4**
204	9.501	13.718	11.001	8.298	6.046	1.475	1.504	0.186	9.42	11.17	177.33	244.3	**399.2**
205	9.555	13.792	11.056	8.338	6.079	1.483	1.513	0.188	9.47	11.23	177.69	245.2	**401.0**
206	9.608	13.866	11.112	8.378	6.112	1.492	1.522	0.190	9.52	11.29	178.06	246.1	**402.8**
207	9.662	13.941	11.167	8.418	6.145	1.500	1.531	0.192	9.58	11.34	178.43	247.0	**404.6**
208	9.715	14.015	11.223	8.458	6.178	1.509	1.540	0.195	9.63	11.40	178.79	247.9	**406.4**
209	9.769	14.090	11.278	8.499	6.211	1.517	1.549	0.197	9.69	11.45	179.16	248.9	**408.2**
210	9.822	14.164	11.334	8.539	6.245	1.526	1.558	0.199	9.74	11.51	179.53	249.8	**410.0**
211	9.876	14.239	11.389	8.579	6.278	1.534	1.567	0.201	9.79	11.57	179.89	250.7	**411.8**
212	9.930	14.313	11.445	8.619	6.311	1.543	1.575	0.203	9.85	11.62	180.26	251.7	**413.6**
213	9.984	14.388	11.501	8.659	6.345	1.551	1.584	0.205	9.90	11.68	180.63	252.6	**415.4**
214	10.038	14.463	11.556	8.699	6.378	1.560	1.593	0.207	9.96	11.73	180.99	253.5	**417.2**
215	10.092	14.537	11.612	8.739	6.411	1.569	1.602	0.209	10.01	11.79	181.36	254.5	**419.0**
216	10.146	14.612	11.667	8.779	6.445	1.577	1.611	0.212	10.07	11.85	181.72	255.4	**420.8**
217	10.200	14.687	11.723	8.819	6.478	1.586	1.620	0.214	10.12	11.90	182.09	256.3	**422.6**
218	10.254	14.762	11.778	8.860	6.512	1.594	1.629	0.216	10.18	11.96	182.46	257.3	**424.4**
219	10.308	14.837	11.834	8.900	6.545	1.603	1.639	0.218	10.23	12.01	182.82	258.2	**426.2**
220	10.362	14.912	11.889	8.940	6.579	1.612	1.648	0.220	10.29	12.07	183.19	259.2	**428.0**
221	10.417	14.987	11.945	8.980	6.612	1.620	1.657	0.222	10.35	12.13	183.55	260.2	**429.8**
222	10.471	15.062	12.000	9.020	6.646	1.629	1.666	0.225	10.40	12.18	183.92	261.1	**431.6**
223	10.525	15.137	12.056	9.061	6.680	1.638	1.675	0.227	10.46	12.24	184.28	262.1	**433.4**
224	10.580	15.212	12.111	9.101	6.713	1.646	1.684	0.229	10.51	12.29	184.65	263.0	**435.2**
225	10.634	15.287	12.167	9.141	6.747	1.655	1.693	0.231	10.57	12.35	185.01	264.0	**437.0**
226	10.689	15.362	12.222	9.181	6.781	1.663	1.702	0.234	10.62	12.41	185.38	265.0	**438.8**
227	10.743	15.438	12.278	9.222	6.814	1.672	1.711	0.236	10.68	12.46	185.74	266.0	**440.6**
228	10.798	15.513	12.334	9.262	6.848	1.681	1.720	0.238	10.74	12.52	186.11	266.9	**442.4**
229	10.853	15.588	12.389	9.302	6.882	1.690	1.729	0.241	10.79	12.57	186.47	267.9	**444.2**
230	10.907	15.664	12.445	9.343	6.916	1.698	1.739	0.243	10.85	12.63	186.84	268.9	**446.0**

°C t90	Type T Cu-CuNi mV	Type E NiCr-CuNi mV	Type J Fe-CuNi mV	Type K NiCr-Ni mV	Type N NiCrSi-NiSi mV	Type S Pt10Rh-Pt mV	Type R Pt13Rh-Pt mV	Type B Pt30Rh-Pt6Rh mV	Type U Cu-CuNi mV	Type L Fe-CuNi mV	Pt100 Ω	Ni100 Ω	°F t90
231	10.962	15.739	12.500	9.383	6.949	1.707	1.748	0.245	10.91	12.69	187.20	269.9	**447.8**
232	11.017	15.815	12.556	9.423	6.983	1.716	1.757	0.248	10.96	12.74	187.56	270.9	**449.6**
233	11.072	15.890	12.611	9.464	7.017	1.724	1.766	0.250	11.02	12.80	187.93	271.8	**451.4**
234	11.127	15.966	12.667	9.504	7.051	1.733	1.775	0.252	11.07	12.85	188.29	272.8	**453.2**
235	11.182	16.041	12.722	9.545	7.085	1.742	1.784	0.255	11.13	12.91	188.66	273.8	**455.0**
236	11.237	16.117	12.778	9.585	7.119	1.751	1.794	0.257	11.19	12.97	189.02	274.8	**456.8**
237	11.292	16.193	12.833	9.626	7.153	1.759	1.803	0.259	11.24	13.02	189.38	275.8	**458.6**
238	11.347	16.269	12.889	9.666	7.187	1.768	1.812	0.262	11.30	13.08	189.75	276.8	**460.4**
239	11.403	16.344	12.944	9.707	7.221	1.777	1.821	0.264	11.35	13.13	190.11	277.9	**462.2**
240	11.458	16.420	13.000	9.747	7.255	1.786	1.831	0.267	11.41	13.19	190.47	278.9	**464.0**
241	11.513	16.496	13.056	9.788	7.289	1.794	1.840	0.269	11.47	13.25	190.84	279.9	**465.8**
242	11.569	16.572	13.111	9.828	7.323	1.803	1.849	0.271	11.52	13.30	191.20	280.9	**467.6**
243	11.624	16.648	13.167	9.869	7.357	1.812	1.858	0.274	11.58	13.36	191.56	281.9	**469.4**
244	11.680	16.724	13.222	9.909	7.392	1.821	1.868	0.276	11.64	13.41	191.92	282.9	**471.2**
245	11.735	16.800	13.278	9.950	7.426	1.829	1.877	0.279	11.69	13.47	192.29	284.0	**473.0**
246	11.791	16.876	13.333	9.991	7.460	1.838	1.886	0.281	11.75	13.53	192.65	285.0	**474.8**
247	11.846	16.952	13.389	10.031	7.494	1.847	1.895	0.284	11.81	13.58	193.01	286.0	**476.6**
248	11.902	17.028	13.444	10.072	7.528	1.856	1.905	0.286	11.87	13.64	193.37	287.1	**478.4**
249	11.958	17.104	13.500	10.113	7.563	1.865	1.914	0.289	11.92	13.69	193.74	288.1	**480.2**
250	12.013	17.181	13.555	10.153	7.597	1.874	1.923	0.291	11.98	13.75	194.10	289.2	**482.0**
251	12.069	17.257	13.611	10.194	7.631	1.882	1.933	0.294	12.04	13.81	194.46		**483.8**
252	12.125	17.333	13.666	10.235	7.666	1.891	1.942	0.296	12.09	13.86	194.82		**485.6**
253	12.181	17.409	13.722	10.276	7.700	1.900	1.951	0.299	12.15	13.92	195.18		**487.4**
254	12.237	17.486	13.777	10.316	7.734	1.909	1.961	0.301	12.21	13.97	195.55		**489.2**
255	12.293	17.562	13.833	10.357	7.769	1.918	1.970	0.304	12.26	14.03	195.91		**491.0**
256	12.349	17.639	13.888	10.398	7.803	1.927	1.980	0.307	12.32	14.09	196.27		**492.8**
257	12.405	17.715	13.944	10.439	7.838	1.936	1.989	0.309	12.38	14.14	196.63		**494.6**
258	12.461	17.792	13.999	10.480	7.872	1.944	1.998	0.312	12.44	14.20	196.99		**496.4**
259	12.518	17.868	14.055	10.520	7.907	1.953	2.008	0.314	12.49	14.25	197.35		**498.2**
260	12.574	17.945	14.110	10.561	7.941	1.962	2.017	0.317	12.55	14.31	197.71		**500.0**
261	12.630	18.021	14.166	10.602	7.976	1.971	2.027	0.320	12.61	14.37	198.07		**501.8**
262	12.687	18.098	14.221	10.643	8.010	1.980	2.036	0.322	12.67	14.42	198.43		**503.6**
263	12.743	18.175	14.277	10.684	8.045	1.989	2.046	0.325	12.72	14.48	198.79		**505.4**
364	12.799	18.252	14.332	10.725	8.080	1.998	2.055	0.328	12.78	14.54	199.15		**507.2**
265	12.856	18.328	14.388	10.766	8.114	2.007	2.064	0.330	12.84	14.59	199.51		**509.0**
266	12.912	18.405	14.443	10.807	8.149	2.016	2.074	0.333	12.90	14.65	199.87		**510.8**
267	12.969	18.482	14.499	10.848	8.184	2.025	2.083	0.336	12.96	14.71	200.23		**512.6**
268	13.026	18.559	14.554	10.889	8.218	2.034	2.093	0.338	13.01	14.76	200.59		**514.4**
269	13.082	18.636	14.609	10.930	8.253	2.043	2.102	0.341	13.07	14.82	200.95		**516.2**
270	13.139	18.713	14.665	10.971	8.288	2.052	2.112	0.344	13.13	14.88	201.31		**518.0**
271	13.196	18.790	14.720	11.012	8.323	2.061	2.121	0.347	13.19	14.94	201.67		**519.8**
272	13.253	18.867	14.776	11.053	8.358	2.070	2.131	0.349	13.25	14.99	202.03		**521.6**
273	13.310	18.944	14.831	11.094	8.392	2.078	2.140	0.352	13.30	15.05	202.39		**523.4**
274	13.366	19.021	14.887	11.135	8.427	2.087	2.150	0.355	13.36	15.10	202.75		**525.2**
275	13.423	19.098	14.942	11.176	8.462	2.096	2.159	0.358	13.42	15.16	203.11		**527.0**
276	13.480	19.175	14.998	11.217	8.497	2.105	2.169	0.360	13.48	15.22	203.47		**528.8**
277	13.537	19.252	15.053	11.259	8.532	2.114	2.179	0.363	13.54	15.27	203.83		**530.6**
278	13.595	19.330	15.109	11.300	8.567	2.123	2.188	0.366	13.59	15.33	204.19		**532.4**
279	13.652	19.407	15.164	11.341	8.602	2.132	2.198	0.369	13.65	15.38	204.55		**534.2**
280	13.709	19.484	15.219	11.382	8.637	2.141	2.207	0.372	13.71	15.44	204.90		**536.0**

°C t90	Type T Cu-CuNi mV	Type E NiCr-CuNi mV	Type J Fe-CuNi mV	Type K NiCr-Ni mV	Type N NiCrSi-NiSi mV	Type S Pt10Rh-Pt mV	Type R Pt13Rh-Pt mV	Type B Pt30Rh-Pt6Rh mV	Type U Cu-CuNi mV	Type L Fe-CuNi mV	Pt100 Ω	Ni100 Ω	°F t90
281	13.766	19.561	15.275	11.423	8.672	2.151	2.217	0.375	13.77	15.50	205.26		**537.8**
282	13.823	19.639	15.330	11.465	8.707	2.160	2.226	0.377	13.83	15.55	205.62		**539.6**
283	13.881	19.716	15.386	11.506	8.742	2.169	2.236	0.380	13.89	15.61	205.98		**541.4**
284	13.938	19.794	15.441	11.547	8.777	2.178	2.246	0.383	13.95	15.66	206.34		**543.2**
285	13.995	19.871	15.496	11.588	8.812	2.187	2.255	0.386	14.00	15.72	206.70		**545.0**
286	14.053	19.948	15.552	11.630	8.847	2.196	2.265	0.389	14.06	15.78	207.05		**546.8**
287	14.110	20.026	15.607	11.671	8.882	2.205	2.275	0.392	14.12	15.83	207.41		**548.6**
288	14.168	20.103	15.663	11.712	8.918	2.214	2.284	0.395	14.18	15.89	207.77		**550.4**
289	14.226	20.181	15.718	11.753	8.953	2.223	2.294	0.398	14.24	15.94	208.13		**552.2**
290	14.283	20.259	15.773	11.795	8.988	2.232	2.304	0.401	14.30	16.00	208.48		**554.0**
291	14.341	20.336	15.829	11.836	9.023	2.241	2.313	0.404	14.36	16.06	208.84		**555.8**
292	14.399	20.414	15.884	11.877	9.058	2.250	2.323	0.407	14.42	16.11	209.20		**557.6**
293	14.456	20.492	15.940	11.919	9.094	2.259	2.333	0.410	14.48	16.17	209.56		**559.4**
294	14.514	20.569	15.995	11.960	9.129	2.268	2.342	0.413	14.54	16.22	209.91		**561.2**
295	14.572	20.647	16.050	12.001	9.164	2.277	2.352	0.416	14.60	16.28	210.27		**563.0**
296	14.630	20.725	16.106	12.043	9.200	2.287	2.362	0.419	14.66	16.34	210.63		**564.8**
297	14.688	20.803	16.161	12.084	9.235	2.296	2.371	0.422	14.72	16.39	210.98		**566.6**
298	14.746	20.880	16.216	12.126	9.270	2.305	2.381	0.425	14.78	16.45	211.34		**568.4**
299	14.804	20.958	16.272	12.167	9.306	2.314	2.391	0.428	14.84	16.50	211.70		**570.2**
300	14.862	21.036	16.327	12.209	9.341	2.323	2.401	0.431	14.90	16.56	212.05		**572.0**
301	14.920	21.114	16.383	12.250	9.377	2.332	2.410	0.434	14.96	16.62	212.41		**573.8**
302	14.978	21.192	16.438	12.291	9.412	2.341	2.420	0.437	15.02	16.67	212.76		**575.6**
303	15.036	21.270	16.493	12.333	9.448	2.350	2.430	0.440	15.08	16.73	213.12		**577.4**
304	15.095	21.348	16.549	12.374	9.483	2.360	2.440	0.443	15.14	16.78	213.48		**579.2**
305	15.153	21.426	16.604	12.416	9.519	2.369	2.449	0.446	15.20	16.84	213.83		**581.0**
306	15.211	21.504	16.659	12.457	9.554	2.378	2.459	0.449	15.26	16.90	214.19		**582.8**
307	15.270	21.582	16.715	12.499	9.590	2.387	2.469	0.452	15.32	16.95	214.54		**584.6**
308	15.328	21.660	16.770	12.540	9.625	2.396	2.479	0.455	15.38	17.01	214.90		**586.4**
309	15.386	21.739	16.825	12.582	9.661	2.405	2.488	0.458	15.44	17.06	215.25		**588.2**
310	15.445	21.817	16.881	12.624	9.696	2.415	2.498	0.462	15.50	17.12	215.61		**590.0**
311	15.503	21.895	16.936	12.665	9.732	2.424	2.508	0.465	15.56	17.18	215.96		**591.8**
312	15.562	21.973	16.991	12.707	9.768	2.433	2.518	0.468	15.62	17.23	216.32		**593.6**
313	15.621	22.051	17.046	12.748	9.803	2.442	2.528	0.471	15.68	17.29	216.67		**595.4**
314	15.679	22.130	17.102	12.790	9.839	2.451	2.538	0.474	15.74	17.34	217.03		**597.2**
315	15.738	22.208	17.157	12.831	9.875	2.461	2.547	0.478	15.80	17.40	217.38		**599.0**
316	15.797	22.286	17.212	12.873	9.910	2.470	2.557	0.481	15.86	17.46	217.74		**600.8**
317	15.856	22.365	17.268	12.915	9.946	2.479	2.567	0.484	15.92	17.51	218.09		**602.6**
318	15.914	22.443	17.323	12.956	9.982	2.488	2.577	0.487	15.98	17.57	218.44		**604.4**
319	15.973	22.522	17.378	12.998	10.018	2.497	2.587	0.490	16.04	17.62	218.80		**606.2**
320	16.032	22.600	17.434	13.040	10.054	2.507	2.597	0.494	16.10	17.68	219.15		**608.0**
321	16.091	22.678	17.489	13.081	10.089	2.516	2.607	0.497	16.16	17.74	219.51		**609.8**
322	16.150	22.757	17.544	13.123	10.125	2.525	2.617	0.500	16.22	17.79	219.86		**611.6**
323	16.209	22.835	17.599	13.165	10.161	2.534	2.626	0.503	16.28	17.85	220.21		**613.4**
324	16.268	22.914	17.655	13.206	10.197	2.544	2.636	0.507	16.34	17.90	220.57		**615.2**
325	16.327	22.993	17.710	13.248	10.233	2.553	2.646	0.510	16.40	17.96	220.92		**617.0**
326	16.387	23.071	17.765	13.290	10.269	2.562	2.656	0.513	16.46	18.02	221.27		**618.8**
327	16.446	23.150	17.820	13.331	10.305	2.571	2.666	0.517	16.52	18.07	221.63		**620.6**
328	16.505	23.228	17.876	13.373	10.341	2.581	2.676	0.520	16.58	18.13	221.98		**622.4**
329	16.564	23.307	17.931	13.415	10.377	2.590	2.686	0.523	16.64	18.18	222.33		**624.2**
330	16.624	23.386	17.986	13.457	10.413	2.599	2.696	0.527	16.70	18.24	222.68		**626.0**

°C t90	Type T Cu-CuNi mV	Type E NiCr-CuNi mV	Type J Fe-CuNi mV	Type K NiCr-Ni mV	Type N NiCrSi-NiSi mV	Type S Pt10Rh-Pt mV	Type R Pt13Rh-Pt mV	Type B Pt30Rh-Pt6Rh mV	Type U Cu-CuNi mV	Type L Fe-CuNi mV	Pt100 Ω	Ni100 Ω	°F t90
331	16.683	23.464	18.041	13.498	10.449	2.609	2.706	0.530	16.76	18.30	223.04		**627.8**
332	16.742	23.543	18.097	13.540	10.485	2.618	2.716	0.533	16.82	18.35	223.39		**629.6**
333	16.802	23.622	18.152	13.582	10.521	2.627	2.726	0.537	16.88	18.41	223.74		**631.4**
334	16.861	23.701	18.207	13.624	10.557	2.636	2.736	0.540	16.94	18.46	224.09		**633.2**
335	16.921	23.780	18.262	13.665	10.593	2.646	2.746	0.544	17.00	18.52	224.45		**635.0**
336	16.980	23.858	18.318	13.707	10.629	2.655	2.756	0.547	17.07	18.58	224.80		**636.8**
337	17.040	23.937	18.373	13.749	10.665	2.664	2.766	0.550	17.13	18.63	225.15		**638.6**
338	17.100	24.016	18.428	13.791	10.701	2.674	2.776	0.554	17.19	18.69	225.50		**640.4**
339	17.159	24.095	18.483	13.833	10.737	2.683	2.786	0.557	17.24	18.74	225.85		**642.2**
340	17.219	24.174	18.538	13.874	10.774	2.692	2.796	0.561	17.31	18.80	226.21		**644.0**
341	17.279	24.253	18.594	13.916	10.810	2.702	2.806	0.564	17.37	18.86	226.56		**645.8**
342	17.339	24.332	18.649	13.958	10.846	2.711	2.816	0.568	17.43	18.91	226.91		**647.6**
343	17.399	24.411	18.704	14.000	10.882	2.720	2.826	0.571	17.49	18.97	227.26		**649.4**
344	17.458	24.490	18.759	14.042	10.918	2.730	2.836	0.575	17.55	19.02	227.61		**651.2**
345	17.518	24.569	18.814	14.084	10.955	2.739	2.846	0.578	17.61	19.08	227.96		**653.0**
346	17.578	24.648	18.870	14.126	10.991	2.748	2.856	0.582	17.68	19.14	228.31		**654.8**
347	17.638	24.727	18.925	14.167	11.027	2.758	2.866	0.585	17.74	19.19	228.66		**656.6**
348	17.698	24.806	18.980	14.209	11.064	2.767	2.876	0.589	17.80	19.25	229.02		**658.4**
349	17.759	24.885	19.035	14.251	11.100	2.776	2.886	0.592	17.86	19.30	229.37		**660.2**
350	17.819	24.964	19.090	14.293	11.136	2.786	2.896	0.596	17.92	19.36	229.72		**662.0**
351	17.879	25.044	19.146	14.335	11.173	2.795	2.906	0.599	17.98	19.42	230.07		**663.8**
352	17.939	25.123	19.201	14.377	11.209	2.805	2.916	0.603	18.04	19.47	230.42		**665.6**
353	17.999	25.202	19.256	14.419	11.245	2.814	2.926	0.607	18.10	19.53	230.77		**667.4**
354	18.060	25.281	19.311	14.461	11.282	2.823	2.937	0.610	18.16	19.58	231.12		**669.2**
355	18.120	25.360	19.366	14.503	11.318	2.833	2.947	0.614	18.22	19.64	231.47		**671.0**
356	18.180	25.440	19.422	14.545	11.355	2.842	2.957	0.617	18.29	19.70	231.82		**672.8**
357	18.241	25.519	19.477	14.587	11.391	2.851	2.967	0.621	18.35	19.75	232.17		**674.6**
358	18.301	25.598	19.532	14.629	11.428	2.861	2.977	0.625	18.41	19.81	232.52		**676.4**
359	18.362	25.678	19.587	14.671	11.464	2.870	2.987	0.628	18.47	19.86	232.87		**678.2**
360	18.422	25.757	19.642	14.713	11.501	2.880	2.997	0.632	18.53	19.92	233.21		**680.0**
361	18.483	25.836	19.697	14.755	11.537	2.889	3.007	0.636	18.59	19.98	233.56		**681.8**
362	18.543	25.916	19.753	14.797	11.574	2.899	3.018	0.639	18.65	20.03	233.91		**683.6**
363	18.604	25.995	19.808	14.839	11.610	2.908	3.028	0.643	18.71	20.09	234.26		**685.4**
364	18.665	26.075	19.863	14.881	11.647	2.917	3.038	0.647	18.77	20.14	234.61		**687.2**
365	18.725	26.154	19.918	14.923	11.683	2.927	3.048	0.650	18.83	20.20	234.96		**689.0**
366	18.786	26.233	19.973	14.965	11.720	2.936	3.058	0.654	18.89	20.26	235.31		**690.8**
367	18.847	26.313	20.028	15.007	11.757	2.946	3.068	0.658	18.96	20.31	235.66		**692.6**
368	18.908	26.392	20.083	15.049	11.793	2.955	3.079	0.662	19.02	20.37	236.00		**694.4**
369	18.969	26.472	20.139	15.091	11.830	2.965	3.089	0.665	19.08	20.42	236.35		**696.2**
370	19.030	26.552	20.194	15.133	11.867	2.974	3.099	0.669	19.14	20.48	236.70		**698.0**
371	19.091	26.631	20.249	15.175	11.903	2.983	3.109	0.673	19.20	20.54	237.05		**699.8**
372	19.152	26.711	20.304	15.217	11.940	2.993	3.119	0.677	19.26	20.59	237.40		**701.6**
373	19.213	26.790	20.359	15.259	11.977	3.002	3.130	0.680	19.33	20.65	237.74		**703.4**
374	19.274	26.870	20.414	15.301	12.013	3.012	3.140	0.684	19.39	20.70	238.09		**705.2**
375	19.335	26.950	20.469	15.343	12.050	3.021	3.150	0.688	19.45	20.76	238.44		**707.0**
376	19.396	27.029	20.525	15.385	12.087	3.031	3.160	0.692	19.51	20.82	238.79		**708.8**
377	19.457	27.109	20.580	15.427	12.124	3.040	3.171	0.696	19.57	20.87	239.13		**710.6**
378	19.518	27.189	20.635	15.469	12.160	3.050	3.181	0.700	19.64	20.93	239.48		**712.4**
379	19.579	27.268	20.690	15.511	12.197	3.059	3.191	0.703	19.70	20.98	239.83		**714.2**
380	19.641	27.348	20.745	15.554	12.234	3.069	3.201	0.707	19.76	21.04	240.18		**716.0**

°C t90	Type T Cu-CuNi mV	Type E NiCr-CuNi mV	Type J Fe-CuNi mV	Type K NiCr-Ni mV	Type N NiCrSi-NiSi mV	Type S Pt10Rh-Pt mV	Type R Pt13Rh-Pt mV	Type B Pt30Rh-Pt6Rh mV	Type U Cu-CuNi mV	Type L Fe-CuNi mV	Pt100 Ω	Ni100 Ω	°F t90
381	19.702	27.428	20.800	15.596	12.271	3.078	3.212	0.711	19.82	21.10	240.52		**717.8**
382	19.763	27.507	20.855	15.638	12.308	3.088	3.222	0.715	19.89	21.15	240.87		**719.6**
383	19.825	27.587	20.911	15.680	12.345	3.097	3.232	0.719	19.95	21.21	241.22		**721.4**
384	19.886	27.667	20.966	15.722	12.382	3.107	3.242	0.723	20.01	21.26	241.56		**723.2**
385	19.947	27.747	21.021	15.764	12.418	3.116	3.253	0.727	20.07	21.32	241.91		**725.0**
386	20.009	27.827	21.076	15.806	12.455	3.126	3.263	0.731	20.13	21.38	242.26		**726.8**
387	20.070	27.907	21.131	15.849	12.492	3.135	3.273	0.735	20.19	21.43	242.60		**728.6**
388	20.132	27.986	21.186	15.891	12.529	3.145	3.284	0.738	20.26	21.49	242.95		**730.4**
389	20.193	28.066	21.241	15.933	12.566	3.154	3.294	0.742	20.32	21.54	243.29		**732.2**
390	20.255	28.146	21.297	15.975	12.603	3.164	3.304	0.746	20.38	21.60	243.64		**734.0**
391	20.317	28.226	21.352	16.017	12.640	3.173	3.315	0.750	20.44	21.66	243.99		**735.8**
392	20.378	28.306	21.407	16.059	12.677	3.183	3.325	0.754	20.50	21.71	244.33		**737.6**
393	20.440	28.386	21.462	16.102	12.714	3.192	3.335	0.758	20.57	21.77	244.68		**739.4**
394	20.502	28.466	21.517	16.144	12.751	3.202	3.346	0.762	20.63	21.82	245.02		**741.2**
395	20.563	28.546	21.572	16.186	12.788	3.212	3.356	0.766	20.69	21.88	245.37		**743.0**
396	20.625	28.626	21.627	16.228	12.825	3.221	3.366	0.770	20.75	21.94	245.71		**744.8**
397	20.687	28.706	21.683	16.270	12.862	3.231	3.377	0.774	20.81	21.99	246.06		**746.6**
398	20.748	28.786	21.738	16.313	12.899	3.240	3.387	0.778	20.88	22.05	246.40		**748.4**
399	20.810	28.866	21.793	16.355	12.937	3.250	3.397	0.782	20.94	22.10	246.75		**750.2**
400	20.872	28.946	21.848	16.397	12.974	3.259	3.408	0.787	21.00	22.16	247.09		**752.0**
401		29.026	21.903	16.439	13.011	3.269	3.418	0.791	21.06	22.22	247.44		**753.8**
402		29.106	21.958	16.482	13.048	3.278	3.428	0.795	21.12	22.27	247.78		**755.6**
403		29.186	22.014	16.524	13.085	3.288	3.439	0.799	21.19	22.33	248.13		**757.4**
404		29.266	22.069	16.566	13.122	3.298	3.449	0.803	21.25	22.38	248.47		**759.2**
405		29.346	22.124	16.608	13.159	3.307	3.460	0.807	21.31	22.44	248.81		**761.0**
406		29.427	22.179	16.651	13.197	3.317	3.470	0.811	21.37	22.50	249.16		**762.8**
407		29.507	22.234	16.693	13.234	3.326	3.480	0.815	21.43	22.55	249.50		**764.6**
408		29.587	22.289	16.735	13.271	3.336	3.491	0.819	21.50	22.61	249.85		**766.4**
409		29.667	22.345	16.778	13.308	3.346	3.501	0.824	21.56	22.66	250.19		**768.2**
410		29.747	22.400	16.820	13.346	3.355	3.512	0.828	21.62	22.72	250.53		**770.0**
411		29.827	22.455	16.862	13.383	3.365	3.522	0.832	21.68	22.78	250.88		**771.8**
412		29.908	22.510	16.904	13.420	3.374	3.533	0.836	21.75	22.83	251.22		**773.6**
413		29.988	22.565	16.947	13.457	3.384	3.543	0.840	21.81	22.89	251.56		**775.4**
414		30.068	22.620	16.989	13.495	3.394	3.553	0.844	21.87	22.95	251.91		**777.2**
415		30.148	22.676	17.031	13.532	3.403	3.564	0.849	21.93	23.00	252.25		**779.0**
416		30.229	22.731	17.074	13.569	3.413	3.574	0.853	22.00	23.06	252.59		**780.8**
417		30.309	22.786	17.116	13.607	3.423	3.585	0.857	22.06	23.12	252.93		**782.6**
418		30.389	22.841	17.158	13.644	3.432	3.595	0.861	22.12	23.18	253.28		**784.4**
419		30.470	22.896	17.201	13.682	3.442	3.606	0.866	22.19	23.23	253.62		**786.2**
420		30.550	22.952	17.243	13.719	3.451	3.616	0.870	22.25	23.29	253.96		**788.0**
421		30.630	23.007	17.285	13.756	3.461	3.627	0.874	22.31	23.35	254.30		**789.8**
422		30.711	23.062	17.328	13.794	3.471	3.637	0.878	22.38	23.40	254.65		**791.6**
423		30.791	23.117	17.370	13.831	3.480	3.648	0.883	22.44	23.46	254.99		**793.4**
424		30.871	23.172	17.413	13.869	3.490	3.658	0.887	22.50	23.52	255.33		**795.2**
425		30.952	23.228	17.455	13.906	3.500	3.669	0.891	22.56	23.57	255.67		**797.0**
426		31.032	23.283	17.497	13.944	3.509	3.679	0.896	22.63	23.63	256.01		**798.8**
427		31.112	23.338	17.540	13.981	3.519	3.690	0.900	22.69	23.69	256.35		**800.6**
428		31.193	23.393	17.582	14.019	3.529	3.700	0.904	22.75	23.74	256.70		**802.4**
429		31.273	23.449	17.624	14.056	3.538	3.711	0.909	22.82	23.80	257.04		**804.2**
430		31.354	23.504	17.667	14.094	3.548	3.721	0.913	22.88	23.86	257.38		**806.0**

°C t90	Type T Cu-CuNi mV	Type E NiCr-CuNi mV	Type J Fe-CuNi mV	Type K NiCr-Ni mV	Type N NiCrSi-NiSi mV	Type S Pt10Rh-Pt mV	Type R Pt13Rh-Pt mV	Type B Pt30Rh-Pt6Rh mV	Type U Cu-CuNi mV	Type L Fe-CuNi mV	Pt100 Ω	Ni100 Ω	°F t90
431		31.434	23.559	17.709	14.131	3.558	3.732	0.917	22.94	23.92	257.72		**807.8**
432		31.515	23.614	17.752	14.169	3.567	3.742	0.922	23.01	23.97	258.06		**809.6**
433		31.595	23.670	17.794	14.206	3.577	3.753	0.926	23.07	24.03	258.40		**811.4**
434		31.676	23.725	17.837	14.244	3.587	3.764	0.930	23.13	24.09	258.74		**813.2**
435		31.756	23.780	17.879	14.281	3.596	3.774	0.935	23.19	24.14	259.08		**815.0**
436		31.837	23.835	17.921	14.319	3.606	3.785	0.939	23.26	24.20	259.42		**816.8**
437		31.917	23.891	17.964	14.356	3.616	3.795	0.944	23.32	24.26	259.76		**818.6**
438		31.998	23.946	18.006	14.394	3.626	3.806	0.948	23.38	24.32	260.10		**820.4**
439		32.078	24.001	18.049	14.432	3.635	3.816	0.953	23.45	24.37	260.44		**822.2**
440		32.159	24.057	18.091	14.469	3.645	3.827	0.957	23.51	24.43	260.78		**824.0**
441		32.239	24.112	18.134	14.507	3.655	3.838	0.961	23.57	24.49	261.12		**825.8**
442		32.320	24.167	18.176	14.545	3.664	3.848	0.966	23.64	24.54	261.46		**827.6**
443		32.400	24.223	18.218	14.582	3.674	3.859	0.970	23.70	24.60	261.80		**829.4**
444		32.481	24.278	18.261	14.620	3.684	3.869	0.975	23.77	24.66	262.14		**831.2**
445		32.562	24.333	18.303	14.658	3.694	3.880	0.979	23.83	24.71	262.48		**833.0**
446		32.642	24.389	18.346	14.695	3.703	3.891	0.984	23.89	24.77	262.82		**834.8**
447		32.723	24.444	18.388	14.733	3.713	3.901	0.988	23.96	24.83	263.16		**836.6**
448		32.803	24.499	18.431	14.771	3.723	3.912	0.993	24.02	24.89	263.50		**838.4**
449		32.884	24.555	18.473	14.809	3.732	3.922	0.997	24.09	24.94	263.84		**840.2**
450		32.965	24.610	18.516	14.846	3.742	3.933	1.002	24.15	25.00	264.18		**842.0**
451		33.045	24.665	18.558	14.884	3.752	3.944	1.007	24.21	25.06	264.52		**843.8**
452		33.126	24.721	18.601	14.922	3.762	3.954	1.011	24.28	25.11	264.86		**845.6**
453		33.207	24.776	18.643	14.960	3.771	3.965	1.016	24.34	25.17	265.20		**847.4**
454		33.287	24.832	18.686	14.998	3.781	3.976	1.020	24.41	25.23	265.53		**849.2**
455		33.368	24.887	18.728	15.035	3.791	3.986	1.025	24.47	25.28	265.87		**851.0**
456		33.449	24.943	18.771	15.073	3.801	3.997	1.030	24.53	25.34	266.21		**852.8**
457		33.529	24.998	18.813	15.111	3.810	4.008	1.034	24.60	25.40	266.55		**854.6**
458		33.610	25.053	18.856	15.149	3.820	4.018	1.039	24.66	25.46	266.89		**856.4**
459		33.691	25.109	18.898	15.187	3.830	4.029	1.043	24.73	25.51	267.22		**858.2**
460		33.772	25.164	18.941	15.225	3.840	4.040	1.048	24.79	25.57	267.56		**860.0**
461		33.852	25.220	18.983	15.262	3.850	4.050	1.053	24.85	25.63	267.90		**861.8**
462		33.933	25.275	19.026	15.300	3.859	4.061	1.057	24.92	25.68	268.24		**863.6**
463		34.014	25.331	19.068	15.338	3.869	4.072	1.062	24.98	25.74	268.57		**865.4**
464		34.095	25.386	19.111	15.376	3.879	4.083	1.067	25.05	25.80	268.91		**867.2**
465		34.175	25.442	19.154	15.414	3.889	4.093	1.071	25.11	25.85	269.25		**869.0**
466		34.256	25.497	19.196	15.452	3.898	4.104	1.076	25.18	25.91	269.59		**870.8**
467		34.337	25.553	19.239	15.490	3.908	4.115	1.081	25.24	25.97	269.92		**872.6**
468		34.418	25.608	19.281	15.528	3.918	4.125	1.086	25.31	26.03	270.26		**874.4**
469		34.498	25.664	19.324	15.566	3.928	4.136	1.090	25.37	26.08	270.60		**876.2**
470		34.579	25.720	19.366	15.604	3.938	4.147	1.095	25.44	26.14	270.93		**878.0**
471		34.660	25.775	19.409	15.642	3.947	4.158	1.100	25.50	26.20	271.27		**879.8**
472		34.741	25.831	19.451	15.680	3.957	4.168	1.105	25.57	26.25	271.61		**881.6**
473		34.822	25.886	19.494	15.718	3.967	4.179	1.109	25.63	26.31	271.94		**883.4**
474		34.902	25.942	19.537	15.756	3.977	4.190	1.114	25.70	26.37	272.28		**885.2**
475		34.983	25.998	19.579	15.794	3.987	4.201	1.119	25.76	26.42	272.61		**887.0**
476		35.064	26.053	19.622	15.832	3.997	4.211	1.124	25.83	26.48	272.95		**888.8**
477		35.145	26.109	19.664	15.870	4.006	4.222	1.129	25.89	26.54	273.29		**890.6**
478		35.226	26.165	19.707	15.908	4.016	4.233	1.133	25.95	26.60	273.62		**892.4**
479		35.307	26.220	19.750	15.946	4.026	4.244	1.138	26.02	26.65	273.96		**894.2**
480		35.387	26.276	19.792	15.984	4.036	4.255	1.143	26.09	26.71	274.29		**896.0**

°C t90	Type T Cu-CuNi mV	Type E NiCr-CuNi mV	Type J Fe-CuNi mV	Type K NiCr-Ni mV	Type N NiCrSi-NiSi mV	Type S Pt10Rh-Pt mV	Type R Pt13Rh-Pt mV	Type B Pt30Rh-Pt6Rh mV	Type U Cu-CuNi mV	Type L Fe-CuNi mV	Pt100 Ω	Ni100 Ω	°F t90
481		35.468	26.332	19.835	16.022	4.046	4.265	1.148	26.16	26.77	274.63		**897.8**
482		35.549	26.387	19.877	16.060	4.056	4.276	1.153	26.22	26.82	274.96		**899.6**
483		35.630	26.443	19.920	16.099	4.065	4.287	1.158	26.29	26.88	275.30		**901.4**
484		35.711	26.499	19.962	16.137	4.075	4.298	1.163	26.35	26.94	275.63		**903.2**
485		35.792	26.555	20.005	16.175	4.085	4.309	1.167	26.42	26.99	275.97		**905.0**
486		35.873	26.610	20.048	16.213	4.095	4.319	1.172	26.49	27.05	276.30		**906.8**
487		35.954	26.666	20.090	16.251	4.105	4.330	1.177	26.55	27.11	276.64		**908.6**
488		36.034	26.722	20.133	16.289	4.115	4.341	1.182	26.62	27.17	276.97		**910.4**
489		36.115	26.778	20.175	16.327	4.125	4.352	1.187	26.68	27.22	277.31		**912.2**
490		36.196	26.834	20.218	16.366	4.134	4.363	1.192	26.75	27.28	277.64		**914.0**
491		36.277	26.889	20.261	16.404	4.144	4.373	1.197	26.82	27.34	277.98		**915.8**
492		36.358	26.945	20.303	16.442	4.154	4.384	1.202	26.88	27.39	278.31		**917.6**
493		36.439	27.001	20.346	16.480	4.164	4.395	1.207	26.95	27.45	278.64		**919.4**
494		36.520	27.057	20.389	16.518	4.174	4.406	1.212	27.01	27.51	278.98		**921.2**
495		36.601	27.113	20.431	16.557	4.184	4.417	1.217	27.08	27.56	279.31		**923.0**
496		36.682	27.169	20.474	16.595	4.194	4.428	1.222	27.15	27.62	279.64		**924.8**
497		36.763	27.225	20.516	16.633	4.204	4.439	1.227	27.21	27.68	279.98		**926.6**
498		36.843	27.281	20.559	16.671	4.213	4.449	1.232	27.28	27.74	280.31		**928.4**
499		36.924	27.337	20.602	16.710	4.223	4.460	1.237	27.34	27.79	280.64		**930.2**
500		37.005	27.393	20.644	16.748	4.233	4.471	1.242	27.41	27.85	280.98		**932.0**
501		37.086	27.449	20.687	16.786	4.243	4.482	1.247	27.48	27.91	281.31		**933.8**
502		37.167	27.505	20.730	16.824	4.253	4.493	1.252	27.54	27.97	281.64		**935.6**
503		37.248	27.561	20.772	16.863	4.263	4.504	1.257	27.61	28.02	281.98		**937.4**
504		37.329	27.617	20.815	16.901	4.273	4.515	1.262	27.68	28.08	282.31		**939.2**
505		37.410	27.673	20.857	16.939	4.283	4.526	1.267	27.74	28.14	282.64		**941.0**
506		37.491	27.729	20.900	16.978	4.293	4.537	1.272	27.81	28.20	282.97		**942.8**
507		37.572	27.785	20.943	17.016	4.303	4.548	1.277	27.88	28.26	283.31		**944.6**
508		37.653	27.841	20.985	17.054	4.313	4.558	1.282	27.95	28.31	283.64		**946.4**
509		37.734	27.897	21.028	17.093	4.323	4.569	1.288	28.01	28.37	283.97		**948.2**
510		37.815	27.953	21.071	17.131	4.332	4.580	1.293	28.08	28.43	284.30		**950.0**
511		37.896	28.010	21.113	17.169	4.342	4.591	1.298	28.15	28.49	284.63		**951.8**
512		37.977	28.066	21.156	17.208	4.352	4.602	1.303	28.21	28.55	284.97		**953.6**
513		38.058	28.122	21.199	17.246	4.362	4.613	1.308	28.28	28.60	285.30		**955.4**
514		38.139	28.178	21.241	17.285	4.372	4.624	1.313	28.35	28.66	285.63		**957.2**
515		38.220	28.234	21.284	17.323	4.382	4.635	1.318	28.41	28.72	285.96		**959.0**
516		38.300	28.291	21.326	17.361	4.392	4.646	1.324	28.48	28.78	286.29		**960.8**
517		38.381	28.347	21.369	17.400	4.402	4.657	1.329	28.55	28.84	286.62		**962.6**
518		38.462	28.403	21.412	17.438	4.412	4.668	1.334	28.62	28.89	286.95		**964.4**
519		38.543	28.460	21.454	17.477	4.422	4.679	1.339	28.68	28.95	287.29		**966.2**
520		38.624	28.516	21.497	17.515	4.432	4.690	1.344	28.75	29.01	287.62		**968.0**
521		38.705	28.572	21.540	17.554	4.442	4.701	1.350	28.82	29.07	287.95		**969.8**
522		38.786	28.629	21.582	17.592	4.452	4.712	1.355	28.89	29.13	288.28		**971.6**
523		38.867	28.685	21.625	17.630	4.462	4.723	1.360	28.95	29.18	288.61		**973.4**
524		38.948	28.741	21.668	17.669	4.472	4.734	1.365	29.02	29.24	288.94		**975.2**
525		39.029	28.798	21.710	17.707	4.482	4.745	1.371	29.09	29.30	289.27		**977.0**
526		39.110	28.854	21.753	17.746	4.492	4.756	1.376	29.16	29.36	289.60		**978.8**
527		39.191	28.911	21.796	17.784	4.502	4.767	1.381	29.23	29.42	289.93		**980.6**
528		39.272	28.967	21.838	17.823	4.512	4.778	1.387	29.29	29.47	290.26		**982.4**
529		39.353	29.024	21.881	17.861	4.522	4.789	1.392	29.36	29.53	290.59		**984.2**
530		39.434	29.080	21.924	17.900	4.532	4.800	1.397	29.43	29.59	290.92		**986.0**

°C t90	Type T Cu-CuNi mV	Type E NiCr-CuNi mV	Type J Fe-CuNi mV	Type K NiCr-Ni mV	Type N NiCrSi-NiSi mV	Type S Pt10Rh-Pt mV	Type R Pt13Rh-Pt mV	Type B Pt30Rh-Pt6Rh mV	Type U Cu-CuNi mV	Type L Fe-CuNi mV	Pt100 Ω	Ni100 Ω	°F t90
531		39.515	29.137	21.966	17.938	4.542	4.811	1.402	29.50	29.65	291.25		**987.8**
532		39.596	29.194	22.009	17.977	4.552	4.822	1.408	29.57	29.71	291.58		**989.6**
533		39.677	29.250	22.052	18.016	4.562	4.833	1.413	29.63	29.76	291.91		**991.4**
534		39.758	29.307	22.094	18.054	4.572	4.844	1.418	29.70	29.82	292.24		**993.2**
535		39.839	29.363	22.137	18.093	4.582	4.855	1.424	29.77	29.88	292.56		**995.0**
536		39.920	29.420	22.179	18.131	4.592	4.866	1.429	29.84	29.94	292.89		**996.8**
537		40.001	29.477	22.222	18.170	4.602	4.877	1.435	29.91	30.00	293.22		**998.6**
538		40.082	29.534	22.265	18.208	4.612	4.888	1.440	29.97	30.05	293.55		**1000.4**
539		40.163	29.590	22.307	18.247	4.622	4.899	1.445	30.04	30.11	293.88		**1002.2**
540		40.243	29.647	22.350	18.286	4.632	4.910	1.451	30.11	30.17	294.21		**1004.0**
541		40.324	29.704	22.393	18.324	4.642	4.922	1.456	30.18	30.23	294.54		**1005.8**
542		40.405	29.761	22.435	18.363	4.652	4.933	1.462	30.25	30.29	294.86		**1007.6**
543		40.486	29.818	22.478	18.401	4.662	4.944	1.467	30.32	30.34	295.19		**1009.4**
544		40.567	29.874	22.521	18.440	4.672	4.955	1.472	30.39	30.40	295.52		**1011.2**
545		40.648	29.931	22.563	18.479	4.682	4.966	1.478	30.45	30.46	295.85		**1013.0**
546		40.729	29.988	22.606	18.517	4.692	4.977	1.483	30.52	30.52	296.18		**1014.8**
547		40.810	30.045	22.649	18.556	4.702	4.988	1.489	30.59	30.58	296.50		**1016.6**
548		40.891	30.102	22.691	18.595	4.712	4.999	1.494	30.66	30.63	296.83		**1018.4**
549		40.972	30.159	22.734	18.633	4.722	5.010	1.500	30.73	30.69	297.16		**1020.2**
550		41.053	30.216	22.776	18.672	4.732	5.021	1.505	30.80	30.75	297.49		**1022.0**
551		41.134	30.273	22.819	18.711	4.742	5.033	1.511	30.87	30.81	297.81		**1023.8**
552		41.215	30.330	22.862	18.749	4.752	5.044	1.516	30.94	30.87	298.14		**1025.6**
553		41.296	30.387	22.904	18.788	4.762	5.055	1.522	31.01	30.92	298.47		**1027.4**
554		41.377	30.444	22.947	18.827	4.772	5.066	1.527	31.08	30.98	298.80		**1029.2**
555		41.457	30.502	22.990	18.865	4.782	5.077	1.533	31.14	31.04	299.12		**1031.0**
556		41.538	30.559	23.032	18.904	4.793	5.088	1.539	31.21	31.10	299.45		**1032.8**
557		41.619	30.616	23.075	18.943	4.803	5.099	1.544	31.28	31.16	299.78		**1034.6**
558		41.700	30.673	23.117	18.982	4.813	5.111	1.550	31.35	31.21	300.10		**1036.4**
559		41.781	30.730	23.160	19.020	4.823	5.122	1.555	31.42	31.27	300.43		**1038.2**
560		41.862	30.788	23.203	19.059	4.833	5.133	1.561	31.49	31.33	300.75		**1040.0**
561		41.943	30.845	23.245	19.098	4.843	5.144	1.566	31.56	31.39	301.08		**1041.8**
562		42.024	30.902	23.288	19.136	4.853	5.155	1.572	31.63	31.45	301.41		**1043.6**
563		42.105	30.960	23.331	19.175	4.863	5.166	1.578	31.70	31.50	301.73		**1045.4**
564		42.185	31.017	23.373	19.214	4.873	5.178	1.583	31.77	31.56	302.06		**1047.2**
565		42.266	31.074	23.416	19.253	4.883	5.189	1.589	31.84	31.62	302.38		**1049.0**
566		42.347	31.132	23.458	19.292	4.893	5.200	1.595	31.91	31.68	302.71		**1050.8**
567		42.428	31.189	23.501	19.330	4.904	5.211	1.600	31.98	31.74	303.03		**1052.6**
568		42.509	31.247	23.544	19.369	4.914	5.222	1.606	32.05	31.79	303.36		**1054.4**
569		42.590	31.304	23.586	19.408	4.924	5.234	1.612	32.12	31.85	303.69		**1056.2**
570		42.671	31.362	23.629	19.447	4.934	5.245	1.617	32.19	31.91	304.01		**1058.0**
571		42.751	31.419	23.671	19.485	4.944	5.256	1.623	32.26	31.97	304.34		**1059.8**
572		42.832	31.477	23.714	19.524	4.954	5.267	1.629	32.33	32.03	304.66		**1061.6**
573		42.913	31.535	23.757	19.563	4.964	5.279	1.634	32.40	32.08	304.98		**1063.4**
574		42.994	31.592	23.799	19.602	4.974	5.290	1.640	32.47	32.14	305.31		**1065.2**
575		43.075	31.650	23.842	19.641	4.984	5.301	1.646	32.54	32.20	305.63		**1067.0**
576		43.156	31.708	23.884	19.680	4.995	5.312	1.652	32.61	32.26	305.96		**1068.8**
577		43.236	31.766	23.927	19.718	5.005	5.323	1.657	32.68	32.32	306.28		**1070.6**
578		43.317	31.823	23.970	19.757	5.015	5.335	1.663	32.75	32.37	306.61		**1072.4**
579		43.398	31.881	24.012	19.796	5.025	5.346	1.669	32.82	32.43	306.93		**1074.2**
580		43.479	31.939	24.055	19.835	5.035	5.357	1.675	32.89	32.49	307.25		**1076.0**

°C t90	Type T Cu-CuNi mV	Type E NiCr-CuNi mV	Type J Fe-CuNi mV	Type K NiCr-Ni mV	Type N NiCrSi-NiSi mV	Type S Pt10Rh-Pt mV	Type R Pt13Rh-Pt mV	Type B Pt30Rh-Pt6Rh mV	Type U Cu-CuNi mV	Type L Fe-CuNi mV	Pt100 Ω	Ni100 Ω	°F t90
581		43.560	31.997	24.097	19.874	5.045	5.369	1.680	32.96	32.55	307.58		**1077.8**
582		43.640	32.055	24.140	19.913	5.055	5.380	1.686	33.03	32.61	307.90		**1079.6**
583		43.721	32.113	24.182	19.952	5.066	5.391	1.692	33.10	32.66	308.23		**1081.4**
584		43.802	32.171	24.225	19.990	5.076	5.402	1.698	33.17	32.72	308.55		**1083.2**
585		43.883	32.229	24.267	20.029	5.086	5.414	1.704	33.24	32.78	308.87		**1085.0**
586		43.963	32.287	24.310	20.068	5.096	5.425	1.709	33.32	32.84	309.20		**1086.8**
587		44.044	32.345	24.353	20.107	5.106	5.436	1.715	33.39	32.90	309.52		**1088.6**
588		44.125	32.403	24.395	20.146	5.116	5.448	1.721	33.46	32.96	309.84		**1090.4**
589		44.206	32.461	24.438	20.185	5.127	5.459	1.727	33.53	33.02	310.16		**1092.2**
590		44.286	32.519	24.480	20.224	5.137	5.470	1.733	33.60	33.08	310.49		**1094.0**
591		44.367	32.577	24.523	20.263	5.147	5.481	1.739	33.67	33.14	310.81		**1095.8**
592		44.448	32.636	24.565	20.302	5.157	5.493	1.745	33.74	33.20	311.13		**1097.6**
593		44.529	32.694	24.608	20.341	5.167	5.504	1.750	33.81	33.26	311.45		**1099.4**
594		44.609	32.752	24.650	20.379	5.177	5.515	1.756	33.88	33.32	311.78		**1101.2**
595		44.690	32.810	24.693	20.418	5.188	5.527	1.762	33.95	33.38	312.10		**1103.0**
596		44.771	32.869	24.735	20.457	5.198	5.538	1.768	34.03	33.43	312.42		**1104.8**
597		44.851	32.927	24.778	20.496	5.208	5.549	1.774	34.10	33.49	312.74		**1106.6**
598		44.932	32.985	24.820	20.535	5.218	5.561	1.780	34.17	33.55	313.06		**1108.4**
599		45.013	33.044	24.863	20.574	5.228	5.572	1.786	34.24	33.61	313.39		**1110.2**
600		45.093	33.102	24.905	20.613	5.239	5.583	1.792	34.31	33.67	313.71		**1112.0**
601		45.174	33.161	24.948	20.652	5.249	5.595	1.798		33.73	314.03		**1113.8**
602		45.255	33.219	24.990	20.691	5.259	5.606	1.804		33.79	314.35		**1115.6**
603		45.335	33.278	25.033	20.730	5.269	5.618	1.810		33.85	314.67		**1117.4**
604		45.416	33.337	25.075	20.769	5.280	5.629	1.816		33.91	314.99		**1119.2**
605		45.497	33.395	25.118	20.808	5.290	5.640	1.822		33.97	315.31		**1121.0**
606		45.577	33.454	25.160	20.847	5.300	5.652	1.828		34.02	315.64		**1122.8**
607		45.658	33.513	25.203	20.886	5.310	5.663	1.834		34.08	315.96		**1124.6**
608		45.738	33.571	25.245	20.925	5.320	5.674	1.840		34.14	316.28		**1126.4**
609		45.819	33.630	25.288	20.964	5.331	5.686	1.846		34.20	316.60		**1128.2**
610		45.900	33.689	25.330	21.003	5.341	5.697	1.852		34.26	316.92		**1130.0**
611		45.980	33.748	25.373	21.042	5.351	5.709	1.858		34.32	317.24		**1131.8**
612		46.061	33.807	25.415	21.081	5.361	5.720	1.864		34.38	317.56		**1133.6**
613		46.141	33.866	25.458	21.120	5.372	5.731	1.870		34.44	317.88		**1135.4**
614		46.222	33.925	25.500	21.159	5.382	5.743	1.876		34.50	318.20		**1137.2**
615		46.302	33.984	25.543	21.198	5.392	5.754	1.882		34.56	318.52		**1139.0**
616		46.383	34.043	25.585	21.237	5.402	5.766	1.888		34.61	318.84		**1140.8**
617		46.463	34.102	25.627	21.276	5.413	5.777	1.894		34.67	319.16		**1142.6**
618		46.544	34.161	25.670	21.315	5.423	5.789	1.901		34.73	319.48		**1144.4**
619		46.624	34.220	25.712	21.354	5.433	5.800	1.907		34.79	319.80		**1146.2**
620		46.705	34.279	25.755	21.393	5.443	5.812	1.913		34.85	320.12		**1148.0**
621		46.785	34.338	25.797	21.432	5.454	5.823	1.919		34.91	320.43		**1149.8**
622		46.866	34.397	25.840	21.471	5.464	5.834	1.925		34.97	320.75		**1151.6**
623		46.946	34.457	25.882	21.510	5.474	5.846	1.931		35.03	321.07		**1153.4**
624		47.027	34.516	25.924	21.549	5.485	5.857	1.937		35.09	321.39		**1155.2**
625		47.107	34.575	25.967	21.588	5.495	5.869	1.944		35.15	321.71		**1157.0**
626		47.188	34.635	26.009	21.628	5.505	5.880	1.950		35.20	322.03		**1158.8**
627		47.268	34.694	26.052	21.667	5.515	5.892	1.956		35.26	322.35		**1160.6**
628		47.349	34.754	26.094	21.706	5.526	5.903	1.962		35.32	322.67		**1162.4**
629		47.429	34.813	26.136	21.745	5.536	5.915	1.968		35.38	322.98		**1164.2**
630		47.509	34.873	26.179	21.784	5.546	5.926	1.975		35.44	323.30		**1166.0**

°C t90	Type T Cu-CuNi mV	Type E NiCr-CuNi mV	Type J Fe-CuNi mV	Type K NiCr-Ni mV	Type N NiCrSi-NiSi mV	Type S Pt10Rh-Pt mV	Type R Pt13Rh-Pt mV	Type B Pt30Rh-Pt6Rh mV	Type U Cu-CuNi mV	Type L Fe-CuNi mV	Pt100 Ω	Ni100 Ω	°F t90
631		47.590	34.932	26.221	21.823	5.557	5.938	1.981		35.50	323.62		1167.8
632		47.670	34.992	26.263	21.862	5.567	5.949	1.987		35.56	323.94		1169.6
633		47.751	35.051	26.306	21.901	5.577	5.961	1.993		35.62	324.26		1171.4
634		47.831	35.111	26.348	21.940	5.588	5.972	1.999		35.68	324.57		1173.2
635		47.911	35.171	26.390	21.979	5.598	5.984	2.006		35.74	324.89		1175.0
636		47.992	35.230	26.433	22.018	5.608	5.995	2.012		35.80	325.21		1176.8
637		48.072	35.290	26.475	22.058	5.618	6.007	2.018		35.86	325.53		1178.6
638		48.152	35.350	26.517	22.097	5.629	6.018	2.025		35.92	325.84		1180.4
639		48.233	35.410	26.560	22.136	5.639	6.030	2.031		35.98	326.16		1182.2
640		48.313	35.470	26.602	22.175	5.649	6.041	2.037		36.04	326.48		1184.0
641		48.393	35.530	26.644	22.214	5.660	6.053	2.043		36.10	326.79		1185.8
642		48.474	35.590	26.687	22.253	5.670	6.065	2.050		36.16	327.11		1187.6
643		48.554	35.650	26.729	22.292	5.680	6.076	2.056		36.22	327.43		1189.4
644		48.634	35.710	26.771	22.331	5.691	6.088	2.062		36.28	327.74		1191.2
645		48.715	35.770	26.814	22.370	5.701	6.099	2.069		36.34	328.06		1193.0
646		48.795	35.830	26.856	22.410	5.712	6.111	2.075		36.40	328.38		1194.8
647		48.875	35.890	26.898	22.449	5.722	6.122	2.082		36.46	328.69		1196.6
648		48.955	35.950	26.940	22.488	5.732	6.134	2.088		36.52	329.01		1198.4
649		49.035	36.010	26.983	22.527	5.743	6.146	2.094		36.58	329.32		1200.2
650		49.116	36.071	27.025	22.566	5.753	6.157	2.101		36.64	329.64		1202.0
651		49.196	36.131	27.067	22.605	5.763	6.169	2.107		36.70	329.96		1203.8
652		49.276	36.191	27.109	22.644	5.774	6.180	2.113		36.76	330.27		1205.6
653		49.356	36.252	27.152	22.684	5.784	6.192	2.120		36.82	330.59		1207.4
654		49.436	36.312	27.194	22.723	5.794	6.204	2.126		36.88	330.90		1209.2
655		49.517	36.373	27.236	22.762	5.805	6.215	2.133		36.95	331.22		1211.0
656		49.597	36.433	27.278	22.801	5.815	6.227	2.139		37.01	331.53		1212.8
657		49.677	36.494	27.320	22.840	5.826	6.238	2.146		37.07	331.85		1214.6
658		49.757	36.554	27.363	22.879	5.836	6.250	2.152		37.13	332.16		1216.4
659		49.837	36.615	27.405	22.919	5.846	6.262	2.158		37.19	332.48		1218.2
660		49.917	36.675	27.447	22.958	5.857	6.273	2.165		37.25	332.79		1220.0
661		49.997	36.736	27.489	22.997	5.867	6.285	2.171		37.30	333.11		1221.8
662		50.077	36.797	27.531	23.036	5.878	6.297	2.178		37.36	333.42		1223.6
663		50.157	36.858	27.574	23.075	5.888	6.308	2.184		37.42	333.74		1225.4
664		50.238	36.918	27.616	23.115	5.898	6.320	2.191		37.48	334.05		1227.2
665		50.318	36.979	27.658	23.154	5.909	6.332	2.197		37.55	334.36		1229.0
666		50.398	37.040	27.700	23.193	5.919	6.343	2.204		37.61	334.68		1230.8
667		50.478	37.101	27.742	23.232	5.930	6.355	2.210		37.67	334.99		1232.6
668		50.558	37.162	27.784	23.271	5.940	6.367	2.217		37.73	335.31		1234.4
669		50.638	37.223	27.826	23.311	5.950	6.378	2.224		37.79	335.62		1236.2
670		50.718	37.284	27.869	23.350	5.961	6.390	2.230		37.85	335.93		1238.0
671		50.798	37.345	27.911	23.389	5.971	6.402	2.237		37.91	336.25		1239.8
672		50.878	37.406	27.953	23.428	5.982	6.413	2.243		37.97	336.56		1241.6
673		50.958	37.467	27.995	23.467	5.992	6.425	2.250		38.04	336.87		1243.4
674		51.038	37.528	28.037	23.507	6.003	6.437	2.256		38.10	337.18		1245.2
675		51.118	37.590	28.079	23.546	6.013	6.448	2.263		38.16	337.50		1247.0
676		51.197	37.651	28.121	23.585	6.024	6.460	2.270		38.22	337.81		1248.8
677		51.277	37.712	28.163	23.624	6.034	6.472	2.276		38.28	338.12		1250.6
678		51.357	37.773	28.205	23.663	6.044	6.484	2.283		38.35	338.44		1252.4
679		51.437	37.835	28.247	23.703	6.055	6.495	2.289		38.41	338.75		1254.2
680		51.517	37.896	28.289	23.742	6.065	6.507	2.296		38.47	339.06		1256.0

°C t90	**Type T** Cu-CuNi mV	**Type E** NiCr-CuNi mV	**Type J** Fe-CuNi mV	**Type K** NiCr-Ni mV	**Type N** NiCrSi-NiSi mV	**Type S** Pt10Rh-Pt mV	**Type R** Pt13Rh-Pt mV	**Type B** Pt30Rh-Pt6Rh mV	**Type U** Cu-CuNi mV	**Type L** Fe-CuNi mV	**Pt100** Ω	**Ni100** Ω	**°F** t90
681		51.597	37.958	28.332	23.781	6.076	6.519	2.303		38.53	339.37		**1257.8**
682		51.677	38.019	28.374	23.820	6.086	6.531	2.309		38.59	339.69		**1259.6**
683		51.757	38.081	28.416	23.860	6.097	6.542	2.316		38.66	340.00		**1261.4**
684		51.837	38.142	28.458	23.899	6.107	6.554	2.323		38.72	340.31		**1263.2**
685		51.916	38.204	28.500	23.938	6.118	6.566	2.329		38.78	340.62		**1265.0**
686		51.996	38.265	28.542	23.977	6.128	6.578	2.336		38.84	340.93		**1266.8**
687		52.076	38.327	28.584	24.016	6.139	6.589	2.343		38.90	341.24		**1268.6**
688		52.156	38.389	28.626	24.056	6.149	6.601	2.350		38.97	341.56		**1270.4**
689		52.236	38.450	28.668	24.095	6.160	6.613	2.356		39.03	341.87		**1272.2**
690		52.315	38.512	28.710	24.134	6.170	6.625	2.363		39.09	342.18		**1274.0**
691		52.395	38.574	28.752	24.173	6.181	6.636	2.370		39.15	342.49		**1275.8**
692		52.475	38.636	28.794	24.213	6.191	6.648	2.376		39.22	342.80		**1277.6**
693		52.555	38.698	28.835	24.252	6.202	6.660	2.383		39.28	343.11		**1279.4**
694		52.634	38.760	28.877	24.291	6.212	6.672	2.390		39.34	343.42		**1281.2**
695		52.714	38.822	28.919	24.330	6.223	6.684	2.397		39.41	343.73		**1283.0**
696		52.794	38.884	28.961	24.370	6.233	6.695	2.403		39.47	344.04		**1284.8**
697		52.873	38.946	29.003	24.409	6.244	6.707	2.410		39.53	344.35		**1286.6**
698		52.953	39.008	29.045	24.448	6.254	6.719	2.417		39.59	344.66		**1288.4**
699		53.033	39.070	29.087	24.487	6.265	6.731	2.424		39.66	344.97		**1290.2**
700		53.112	39.132	29.129	24.527	6.275	6.743	2.431		39.72	345.28		**1292.0**
701		53.192	39.194	29.171	24.566	6.286	6.755	2.437		39.78	345.59		**1293.8**
702		53.272	39.256	29.213	24.605	6.296	6.766	2.444		39.85	345.90		**1295.6**
703		53.351	39.318	29.255	24.644	6.307	6.778	2.451		39.91	346.21		**1297.4**
704		53.431	39.381	29.297	24.684	6.317	6.790	2.458		39.97	346.52		**1299.2**
705		53.510	39.443	29.338	24.723	6.328	6.802	2.465		40.04	346.83		**1301.0**
706		53.590	39.505	29.380	24.762	6.338	6.814	2.472		40.10	347.14		**1302.8**
707		53.670	39.568	29.422	24.801	6.349	6.826	2.479		40.16	347.45		**1304.6**
708		53.749	39.630	29.464	24.841	6.360	6.838	2.485		40.22	347.76		**1306.4**
709		53.829	39.693	29.506	24.880	6.370	6.849	2.492		40.29	348.07		**1308.2**
710		53.908	39.755	29.548	24.919	6.381	6.861	2.499		40.35	348.38		**1310.0**
711		53.988	39.818	29.589	24.959	6.391	6.873	2.506		40.41	348.69		**1311.8**
712		54.067	39.880	29.631	24.998	6.402	6.885	2.513		40.48	348.99		**1313.6**
713		54.147	39.943	29.673	25.037	6.412	6.897	2.520		40.54	349.30		**1315.4**
714		54.226	40.005	29.715	25.076	6.423	6.909	2.527		40.60	349.61		**1317.2**
715		54.306	40.068	29.757	25.116	6.434	6.921	2.534		40.67	349.92		**1319.0**
716		54.385	40.131	29.798	25.155	6.444	6.933	2.541		40.73	350.23		**1320.8**
717		54.465	40.193	29.840	25.194	6.455	6.945	2.548		40.80	350.54		**1322.6**
718		54.544	40.256	29.882	25.233	6.465	6.956	2.555		40.86	350.84		**1324.4**
719		54.624	40.319	29.924	25.273	6.476	6.968	2.562		40.93	351.15		**1326.2**
720		54.703	40.382	29.965	25.312	6.486	6.980	2.569		40.98	351.46		**1328.0**
721		54.782	40.445	30.007	25.351	6.497	6.992	2.576		41.04	351.77		**1329.8**
722		54.862	40.508	30.049	25.391	6.508	7.004	2.583		41.11	352.08		**1331.6**
723		54.941	40.570	30.090	25.430	6.518	7.016	2.590		41.17	352.38		**1333.4**
724		55.021	40.633	30.132	25.469	6.529	7.028	2.597		41.23	352.69		**1335.2**
725		55.100	40.696	30.174	25.508	6.539	7.040	2.604		41.30	353.00		**1337.0**
726		55.179	40.759	30.216	25.548	6.550	7.052	2.611		41.36	353.30		**1338.8**
727		55.259	40.822	30.257	25.587	6.561	7.064	2.618		41.43	353.61		**1340.6**
728		55.338	40.886	30.299	25.626	6.571	7.076	2.625		41.49	353.92		**1342.4**
729		55.417	40.949	30.341	25.666	6.582	7.088	2.632		41.56	354.22		**1344.2**
730		55.497	41.012	30.382	25.705	6.593	7.100	2.639		41.62	354.53		**1346.0**

°C t90	Type T Cu-CuNi mV	Type E NiCr-CuNi mV	Type J Fe-CuNi mV	Type K NiCr-Ni mV	Type N NiCrSi-NiSi mV	Type S Pt10Rh-Pt mV	Type R Pt13Rh-Pt mV	Type B Pt30Rh-Pt6Rh mV	Type U Cu-CuNi mV	Type L Fe-CuNi mV	Pt100 Ω	Ni100 Ω	°F t90
731		55.576	41.075	30.424	25.744	6.603	7.112	2.646		41.69	354.84		**1347.8**
732		55.655	41.138	30.466	25.783	6.614	7.124	2.653		41.75	355.14		**1349.6**
733		55.734	41.201	30.507	25.823	6.624	7.136	2.660		41.82	355.45		**1351.4**
734		55.814	41.265	30.549	25.862	6.635	7.148	2.667		41.88	355.76		**1353.2**
735		55.893	41.328	30.590	25.901	6.646	7.160	2.674		41.95	356.06		**1355.0**
736		55.972	41.391	30.632	25.941	6.656	7.172	2.681		42.01	356.37		**1356.8**
737		56.051	41.455	30.674	25.980	6.667	7.184	2.688		42.08	356.67		**1358.6**
738		56.131	41.518	30.715	26.019	6.678	7.196	2.696		42.14	356.98		**1360.4**
739		56.210	41.581	30.757	26.058	6.688	7.208	2.703		42.21	357.28		**1362.2**
740		56.289	41.645	30.798	26.098	6.699	7.220	2.710		42.27	357.59		**1364.0**
741		56.368	41.708	30.840	26.137	6.710	7.232	2.717		42.34	357.90		**1365.8**
742		56.447	41.772	30.881	26.176	6.720	7.244	2.724		42.40	358.20		**1367.6**
743		56.526	41.835	30.923	26.216	6.731	7.256	2.731		42.47	358.51		**1369.4**
744		56.606	41.899	30.964	26.255	6.742	7.268	2.738		42.53	358.81		**1371.2**
745		56.685	41.962	31.006	26.294	6.752	7.280	2.746		42.60	359.12		**1373.0**
746		56.764	42.026	31.047	26.333	6.763	7.292	2.753		42.66	359.42		**1374.8**
747		56.843	42.090	31.089	26.373	6.774	7.304	2.760		42.73	359.72		**1376.6**
748		56.922	42.153	31.130	26.412	6.784	7.316	2.767		42.79	360.03		**1378.4**
749		57.001	42.217	31.172	26.451	6.795	7.328	2.775		42.86	360.33		**1380.2**
750		57.080	42.281	31.213	26.491	6.806	7.340	2.782		42.92	360.64		**1382.0**
751		57.159	42.344	31.255	26.530	6.817	7.352	2.789		42.99	360.94		**1383.8**
752		57.238	42.408	31.296	26.569	6.827	7.364	2.796		43.05	361.25		**1385.6**
753		57.317	42.472	31.338	26.608	6.838	7.376	2.803		43.12	361.55		**1387.4**
754		57.396	42.536	31.379	26.648	6.849	7.389	2.811		43.18	361.85		**1389.2**
755		57.475	42.599	31.421	26.687	6.859	7.401	2.818		43.25	362.16		**1391.0**
756		57.554	42.663	31.462	26.726	6.870	7.413	2.825		43.31	362.46		**1392.8**
757		57.633	42.727	31.504	26.766	6.881	7.425	2.833		43.38	362.76		**1394.6**
758		57.712	42.791	31.545	26.805	6.892	7.437	2.840		43.44	363.07		**1396.4**
759		57.791	42.855	31.586	26.844	6.902	7.449	2.847		43.51	363.37		**1398.2**
760		57.870	42.919	31.628	26.883	6.913	7.461	2.854		43.57	363.67		**1400.0**
761		57.949	42.983	31.669	26.923	6.924	7.473	2.862		43.64	363.98		**1401.8**
762		58.028	43.047	31.710	26.962	6.934	7.485	2.869		43.70	364.28		**1403.6**
763		58.107	43.111	31.752	27.001	6.945	7.498	2.876		43.77	364.58		**1405.4**
764		58.186	43.175	31.793	27.041	6.956	7.510	2.884		43.83	364.89		**1407.2**
765		58.265	43.239	31.834	27.080	6.967	7.522	2.891		43.90	365.19		**1409.0**
766		58.343	43.303	31.876	27.119	6.977	7.534	2.898		43.97	365.49		**1410.8**
767		58.422	43.367	31.917	27.158	6.988	7.546	2.906		44.03	365.79		**1412.6**
768		58.501	43.431	31.958	27.198	6.999	7.558	2.913		44.10	366.10		**1414.4**
769		58.580	43.495	32.000	27.237	7.010	7.570	2.921		44.16	366.40		**1416.2**
770		58.659	43.559	32.041	27.276	7.020	7.583	2.928		44.23	366.70		**1418.0**
771		58.738	43.624	32.082	27.316	7.031	7.595	2.935		44.30	367.00		**1419.8**
772		58.816	43.688	32.124	27.355	7.042	7.607	2.943		44.36	367.30		**1421.6**
773		58.895	43.752	32.165	27.394	7.053	7.619	2.950		44.43	367.60		**1423.4**
774		58.974	43.817	32.206	27.433	7.064	7.631	2.958		44.49	367.91		**1425.2**
775		59.053	43.881	32.247	27.473	7.074	7.644	2.965		44.56	368.21		**1427.0**
776		59.131	43.945	32.289	27.512	7.085	7.656	2.973		44.63	368.51		**1428.8**
777		59.210	44.010	32.330	27.551	7.096	7.668	2.980		44.69	368.81		**1430.6**
778		59.289	44.074	32.371	27.591	7.107	7.680	2.987		44.76	369.11		**1432.4**
779		59.367	44.139	32.412	27.630	7.117	7.692	2.995		44.82	369.41		**1434.2**
780		59.446	44.203	32.453	27.669	7.128	7.705	3.002		44.89	369.71		**1436.0**

°C t90	**Type T** Cu-CuNi mV	**Type E** NiCr-CuNi mV	**Type J** Fe-CuNi mV	**Type K** NiCr-Ni mV	**Type N** NiCrSi-NiSi mV	**Type S** Pt10Rh-Pt mV	**Type R** Pt13Rh-Pt mV	**Type B** Pt30Rh-Pt6Rh mV	**Type U** Cu-CuNi mV	**Type L** Fe-CuNi mV	**Pt100** Ω	**Ni100** Ω	**°F** t90
781		59.525	44.267	32.495	27.708	7.139	7.717	3.010		44.96	370.01		**1437.8**
782		59.604	44.332	32.536	27.748	7.150	7.729	3.017		45.02	370.31		**1439.6**
783		59.682	44.396	32.577	27.787	7.161	7.741	3.025		45.09	370.61		**1441.4**
784		59.761	44.461	32.618	27.826	7.171	7.753	3.032		45.15	370.91		**1443.2**
785		59.839	44.525	32.659	27.866	7.182	7.766	3.040		45.22	371.21		**1445.0**
786		59.918	44.590	32.700	27.905	7.193	7.778	3.047		45.29	371.51		**1446.8**
787		59.997	44.655	32.742	27.944	7.204	7.790	3.055		45.35	371.81		**1448.6**
788		60.075	44.719	32.783	27.983	7.215	7.802	3.062		45.42	372.11		**1450.4**
789		60.154	44.784	32.824	28.023	7.226	7.815	3.070		45.48	372.41		**1452.2**
790		60.232	44.848	32.865	28.062	7.236	7.827	3.078		45.55	372.71		**1454.0**
791		60.311	44.913	32.906	28.101	7.247	7.839	3.085		45.62	373.01		**1455.8**
792		60.390	44.977	32.947	28.140	7.258	7.852	3.093		45.68	373.31		**1457.6**
793		60.468	45.042	32.988	28.180	7.269	7.864	3.100		45.75	373.61		**1459.4**
794		60.547	45.107	33.029	28.219	7.280	7.876	3.108		45.82	373.91		**1461.2**
795		60.625	45.171	33.070	28.258	7.291	7.888	3.116		45.89	374.21		**1463.0**
796		60.704	45.236	33.111	28.297	7.302	7.901	3.123		45.95	374.51		**1464.8**
797		60.782	45.301	33.152	28.337	7.312	7.913	3.131		46.02	374.81		**1466.6**
798		60.860	45.365	33.193	28.376	7.323	7.925	3.138		46.09	375.11		**1468.4**
799		60.939	45.430	33.234	28.415	7.334	7.938	3.146		46.15	375.41		**1470.2**
800		61.017	45.494	33.275	28.455	7.345	7.950	3.154		46.22	375.70		**1472.0**
801		61.096	45.559	33.316	28.494	7.356	7.962	3.161		46.29	376.00		**1473.8**
802		61.174	45.624	33.357	28.533	7.367	7.974	3.169		46.35	376.30		**1475.6**
803		61.253	45.688	33.398	28.572	7.378	7.987	3.177		46.42	376.60		**1477.4**
804		61.331	45.753	33.439	28.612	7.388	7.999	3.184		46.49	376.90		**1479.2**
805		61.409	45.818	33.480	28.651	7.399	8.011	3.192		46.56	377.19		**1481.0**
806		61.488	45.882	33.521	28.690	7.410	8.024	3.200		46.62	377.49		**1482.8**
807		61.566	45.947	33.562	28.729	7.421	8.036	3.207		46.69	377.79		**1484.6**
808		61.644	46.011	33.603	28.769	7.432	8.048	3.215		46.76	378.09		**1486.4**
809		61.723	46.076	33.644	28.808	7.443	8.061	3.223		46.82	378.39		**1488.2**
810		61.801	46.141	33.685	28.847	7.454	8.073	3.230		46.89	378.68		**1490.0**
811		61.879	46.205	33.726	28.886	7.465	8.086	3.238		46.96	378.98		**1491.8**
812		61.958	46.270	33.767	28.926	7.476	8.098	3.246		47.03	379.28		**1493.6**
813		62.036	46.334	33.808	28.965	7.487	8.110	3.254		47.09	379.57		**1495.4**
814		62.114	46.399	33.848	29.004	7.497	8.123	3.261		47.16	379.87		**1497.2**
815		62.192	46.464	33.889	29.043	7.508	8.135	3.269		47.23	380.17		**1499.0**
816		62.271	46.528	33.930	29.083	7.519	8.147	3.277		47.30	380.46		**1500.8**
817		62.349	46.593	33.971	29.122	7.530	8.160	3.285		47.37	380.76		**1502.6**
818		62.427	46.657	34.012	29.161	7.541	8.172	3.292		47.43	381.06		**1504.4**
819		62.505	46.722	34.053	29.200	7.552	8.185	3.300		47.50	381.35		**1506.2**
820		62.583	46.786	34.093	29.239	7.563	8.197	3.308		47.57	381.65		**1508.0**
821		62.662	46.851	34.134	29.279	7.574	8.209	3.316		47.64	381.95		**1509.8**
822		62.740	46.915	34.175	29.318	7.585	8.222	3.324		47.71	382.24		**1511.6**
823		62.818	46.980	34.216	29.357	7.596	8.234	3.331		47.77	382.54		**1513.4**
824		62.896	47.044	34.257	29.396	7.607	8.247	3.339		47.84	382.83		**1515.2**
825		62.974	47.109	34.297	29.436	7.618	8.259	3.347		47.91	383.13		**1517.0**
826		63.052	47.173	34.338	29.475	7.629	8.272	3.355		47.98	383.42		**1518.8**
827		63.130	47.238	34.379	29.514	7.640	8.284	3.363		48.05	383.72		**1520.6**
828		63.208	47.302	34.420	29.553	7.651	8.296	3.371		48.11	384.01		**1522.4**
829		63.286	47.367	34.460	29.592	7.662	8.309	3.379		48.18	384.31		**1524.2**
830		63.364	47.431	34.501	29.632	7.673	8.321	3.386		48.25	384.60		**1526.0**

°C t90	Type T Cu-CuNi mV	Type E NiCr-CuNi mV	Type J Fe-CuNi mV	Type K NiCr-Ni mV	Type N NiCrSi-NiSi mV	Type S Pt10Rh-Pt mV	Type R Pt13Rh-Pt mV	Type B Pt30Rh-Pt6Rh mV	Type U Cu-CuNi mV	Type L Fe-CuNi mV	Pt100 Ω	Ni100 Ω	°F t90
831		63.442	47.495	34.542	29.671	7.684	8.334	3.394		48.32	384.90		**1527.8**
832		63.520	47.560	34.582	29.710	7.695	8.346	3.402		48.39	385.19		**1529.6**
833		63.598	47.624	34.623	29.749	7.706	8.359	3.410		48.46	385.49		**1531.4**
834		63.676	47.688	34.664	29.789	7.717	8.371	3.418		48.53	385.78		**1533.2**
835		63.754	47.753	34.704	29.828	7.728	8.384	3.426		48.60	386.08		**1535.0**
836		63.832	47.817	34.745	29.867	7.739	8.396	3.434		48.66	386.37		**1536.8**
837		63.910	47.881	34.786	29.906	7.750	8.409	3.442		48.73	386.67		**1538.6**
838		63.988	47.946	34.826	29.945	7.761	8.421	3.450		48.80	386.96		**1540.4**
839		64.066	48.010	34.867	29.985	7.772	8.434	3.458		48.87	387.25		**1542.2**
840		64.144	48.074	34.908	30.024	7.783	8.446	3.466		48.94	387.55		**1544.0**
841		64.222	48.138	34.948	30.063	7.794	8.459	3.474		49.01	387.84		**1545.8**
842		64.300	48.202	34.989	30.102	7.805	8.471	3.482		49.08	388.14		**1547.6**
843		64.377	48.267	35.029	30.141	7.816	8.484	3.490		49.15	388.43		**1549.4**
844		64.455	48.331	35.070	30.181	7.827	8.496	3.498		49.22	388.72		**1551.2**
845		64.533	48.395	35.110	30.220	7.838	8.509	3.506		49.29	389.02		**1553.0**
846		64.611	48.459	35.151	30.259	7.849	8.521	3.514		49.35	389.31		**1554.8**
847		64.689	48.523	35.192	30.298	7.860	8.534	3.522		49.42	389.60		**1556.6**
848		64.766	48.587	35.232	30.337	7.871	8.546	3.530		49.49	389.90		**1558.4**
849		64.844	48.651	35.273	30.376	7.882	8.559	3.538		49.56	390.19		**1560.2**
850		64.922	48.715	35.313	30.416	7.893	8.571	3.546		49.63	390.48		**1562.0**
851		65.000	48.779	35.354	30.455	7.904	8.584	3.554		49.70			**1563.8**
852		65.077	48.843	35.394	30.494	7.915	8.597	3.562		49.77			**1565.6**
853		65.155	48.907	35.435	30.533	7.926	8.609	3.570		49.84			**1567.4**
854		65.233	48.971	35.475	30.572	7.937	8.622	3.578		49.91			**1569.2**
855		65.310	49.034	35.516	30.611	7.948	8.634	3.586		49.98			**1571.0**
856		65.388	49.098	35.556	30.651	7.959	8.647	3.594		50.04			**1572.8**
857		65.465	49.162	35.596	30.690	7.970	8.659	3.602		50.11			**1574.6**
858		65.543	49.226	35.637	30.729	7.981	8.672	3.610		50.18			**1576.4**
859		65.621	49.290	35.677	30.768	7.992	8.685	3.618		50.25			**1578.2**
860		65.698	49.353	35.718	30.807	8.003	8.697	3.626		50.32			**1580.0**
861		65.776	49.417	35.758	30.846	8.014	8.710	3.634		50.39			**1581.8**
862		65.853	49.481	35.798	30.886	8.026	8.722	3.643		50.46			**1583.6**
863		65.931	49.544	35.839	30.925	8.037	8.735	3.651		50.53			**1585.4**
864		66.008	49.608	35.879	30.964	8.048	8.748	3.659		50.60			**1587.2**
865		66.086	49.672	35.920	31.003	8.059	8.760	3.667		50.67			**1589.0**
866		66.163	49.735	35.960	31.042	8.070	8.773	3.675		50.74			**1590.8**
867		66.241	49.799	36.000	31.081	8.081	8.785	3.683		50.81			**1592.6**
868		66.318	49.862	36.041	31.120	8.092	8.798	3.692		50.88			**1594.4**
869		66.396	49.926	36.081	31.160	8.103	8.811	3.700		50.95			**1596.2**
870		66.473	49.989	36.121	31.199	8.114	8.823	3.708		51.02			**1598.0**
871		66.550	50.052	36.162	31.238	8.125	8.836	3.716		51.09			**1599.8**
872		66.628	50.116	36.202	31.277	8.137	8.849	3.724		51.16			**1601.6**
873		66.705	50.179	36.242	31.316	8.148	8.861	3.732		51.23			**1603.4**
874		66.782	50.243	36.282	31.355	8.159	8.874	3.741		51.30			**1605.2**
875		66.860	50.306	36.323	31.394	8.170	8.887	3.749		51.37			**1607.0**
876		66.937	50.369	36.363	31.433	8.181	8.899	3.757		51.44			**1608.8**
877		67.014	50.432	36.403	31.473	8.192	8.912	3.765		51.51			**1610.6**
878		67.092	50.495	36.443	31.512	8.203	8.925	3.774		51.58			**1612.4**
879		67.169	50.559	36.484	31.551	8.214	8.937	3.782		51.65			**1614.2**
880		67.246	50.622	36.524	31.590	8.226	8.950	3.790		51.72			**1616.0**

°C t90	Type T Cu-CuNi mV	Type E NiCr-CuNi mV	Type J Fe-CuNi mV	Type K NiCr-Ni mV	Type N NiCrSi-NiSi mV	Type S Pt10Rh-Pt mV	Type R Pt13Rh-Pt mV	Type B Pt30Rh-Pt6Rh mV	Type U Cu-CuNi mV	Type L Fe-CuNi mV	Pt100 Ω	Ni100 Ω	°F t90
881		67.323	50.685	36.564	31.629	8.237	8.963	3.798		51.79			**1617.8**
882		67.400	50.748	36.604	31.668	8.248	8.975	3.807		51.86			**1619.6**
883		67.478	50.811	36.644	31.707	8.259	8.988	3.815		51.93			**1621.4**
884		67.555	50.874	36.685	31.746	8.270	9.001	3.823		52.00			**1623.2**
885		67.632	50.937	36.725	31.785	8.281	9.014	3.832		52.08			**1625.0**
886		67.709	51.000	36.765	31.824	8.293	9.026	3.840		52.15			**1626.8**
887		67.786	51.063	36.805	31.863	8.304	9.039	3.848		52.22			**1628.6**
888		67.863	51.126	36.845	31.903	8.315	9.052	3.857		52.29			**1630.4**
889		67.940	51.188	36.885	31.942	8.326	9.065	3.865		52.36			**1632.2**
890		68.017	51.251	36.925	31.981	8.337	9.077	3.873		52.43			**1634.0**
891		68.094	51.314	36.965	32.020	8.348	9.090	3.882		52.50			**1635.8**
892		68.171	51.377	37.006	32.059	8.360	9.103	3.890		52.57			**1637.6**
893		68.248	51.439	37.046	32.098	8.371	9.115	3.898		52.64			**1639.4**
894		68.325	51.502	37.086	32.137	8.382	9.128	3.907		52.71			**1641.2**
895		68.402	51.565	37.126	32.176	8.393	9.141	3.915		52.79			**1643.0**
896		68.479	51.627	37.166	32.215	8.404	9.154	3.923		52.86			**1644.8**
897		68.556	51.690	37.206	32.254	8.416	9.167	3.932		52.93			**1646.6**
898		68.633	51.752	37.246	32.293	8.427	9.179	3.940		53.00			**1648.4**
899		68.710	51.815	37.286	32.332	8.438	9.192	3.949		53.07			**1650.2**
900		68.787	51.877	37.326	32.371	8.449	9.205	3.957		53.14			**1652.0**
901		68.863	51.940	37.366	32.410	8.460	9.218	3.965					**1653.8**
902		68.940	52.002	37.406	32.449	8.472	9.230	3.974					**1655.6**
903		69.017	52.064	37.446	32.488	8.483	9.243	3.982					**1657.4**
904		69.094	52.127	37.486	32.527	8.494	9.256	3.991					**1659.2**
905		69.171	52.189	37.526	32.566	8.505	9.269	3.999					**1661.0**
906		69.247	52.251	37.566	32.605	8.517	9.282	4.008					**1662.8**
907		69.324	52.314	37.606	32.644	8.528	9.294	4.016					**1664.6**
908		69.401	52.376	37.646	32.683	8.539	9.307	4.024					**1666.4**
909		69.477	52.438	37.686	32.722	8.550	9.320	4.033					**1668.2**
910		69.554	52.500	37.725	32.761	8.562	9.333	4.041					**1670.0**
911		69.631	52.562	37.765	32.800	8.573	9.346	4.050					**1671.8**
912		69.707	52.624	37.805	32.839	8.584	9.359	4.058					**1673.6**
913		69.784	52.686	37.845	32.878	8.595	9.371	4.067					**1675.4**
914		69.860	52.748	37.885	32.917	8.607	9.384	4.075					**1677.2**
915		69.937	52.810	37.925	32.956	8.618	9.397	4.084					**1679.0**
916		70.013	52.872	37.965	32.995	8.629	9.410	4.093					**1680.8**
917		70.090	52.934	38.005	33.034	8.640	9.423	4.101					**1682.6**
918		70.166	52.996	38.044	33.073	8.652	9.436	4.110					**1684.4**
919		70.243	53.057	38.084	33.112	8.663	9.449	4.118					**1686.2**
920		70.319	53.119	38.124	33.151	8.674	9.462	4.127					**1688.0**
921		70.396	53.181	38.164	33.190	8.685	9.474	4.135					**1689.8**
922		70.472	53.243	38.204	33.229	8.697	9.487	4.144					**1691.6**
923		70.548	53.304	38.243	33.268	8.708	9.500	4.152					**1693.4**
924		70.625	53.366	38.283	33.307	8.719	9.513	4.161					**1695.2**
925		70.701	53.427	38.323	33.346	8.731	9.526	4.170					**1697.0**
926		70.777	53.489	38.363	33.385	8.742	9.539	4.178					**1698.8**
927		70.854	53.550	38.402	33.424	8.753	9.552	4.187					**1700.6**
928		70.930	53.612	38.442	33.463	8.765	9.565	4.195					**1702.4**
929		71.006	53.673	38.482	33.502	8.776	9.578	4.204					**1704.2**
930		71.082	53.735	38.522	33.541	8.787	9.591	4.213					**1706.0**

°C t90	Type T Cu-CuNi mV	Type E NiCr-CuNi mV	Type J Fe-CuNi mV	Type K NiCr-Ni mV	Type N NiCrSi-NiSi mV	Type S Pt10Rh-Pt mV	Type R Pt13Rh-Pt mV	Type B Pt30Rh-Pt6Rh mV	Type U Cu-CuNi mV	Type L Fe-CuNi mV	Pt100 Ω	Ni100 Ω	°F t90
931		71.159	53.796	38.561	33.580	8.798	9.603	4.221					**1707.8**
932		71.235	53.857	38.601	33.619	8.810	9.616	4.230					**1709.6**
933		71.311	53.919	38.641	33.658	8.821	9.629	4.239					**1711.4**
934		71.387	53.980	38.680	33.697	8.832	9.642	4.247					**1713.2**
935		71.463	54.041	38.720	33.736	8.844	9.655	4.256					**1715.0**
936		71.539	54.102	38.760	33.774	8.855	9.668	4.265					**1716.8**
937		71.615	54.164	38.799	33.813	8.866	9.681	4.273					**1718.6**
938		71.692	54.225	38.839	33.852	8.878	9.694	4.282					**1720.4**
939		71.768	54.286	38.878	33.891	8.889	9.707	4.291					**1722.2**
940		71.844	54.347	38.918	33.930	8.900	9.720	4.299					**1724.0**
941		71.920	54.408	38.958	33.969	8.912	9.733	4.308					**1725.8**
942		71.996	54.469	38.997	34.008	8.923	9.746	4.317					**1727.6**
943		72.072	54.530	39.037	34.047	8.935	9.759	4.326					**1729.4**
944		72.147	54.591	39.076	34.086	8.946	9.772	4.334					**1731.2**
945		72.223	54.652	39.116	34.124	8.957	9.785	4.343					**1733.0**
946		72.299	54.713	39.155	34.163	8.969	9.798	4.352					**1734.8**
947		72.375	54.773	39.195	34.202	8.980	9.811	4.360					**1736.6**
948		72.451	54.834	39.235	34.241	8.991	9.824	4.369					**1738.4**
949		72.527	54.895	39.274	34.280	9.003	9.837	4.378					**1740.2**
950		72.603	54.956	39.314	34.319	9.014	9.850	4.387					**1742.0**
951		72.678	55.016	39.353	34.358	9.025	9.863	4.396					**1743.8**
952		72.754	55.077	39.393	34.396	9.037	9.876	4.404					**1745.6**
953		72.830	55.138	39.432	34.435	9.048	9.889	4.413					**1747.4**
954		72.906	55.198	39.471	34.474	9.060	9.902	4.422					**1749.2**
955		72.981	55.259	39.511	34.513	9.071	9.915	4.431					**1751.0**
956		73.057	55.319	39.550	34.552	9.082	9.928	4.440					**1752.8**
957		73.133	55.380	39.590	34.591	9.094	9.941	4.448					**1754.6**
958		73.208	55.440	39.629	34.629	9.105	9.954	4.457					**1756.4**
959		73.284	55.501	39.669	34.668	9.117	9.967	4.466					**1758.2**
960		73.360	55.561	39.708	34.707	9.128	9.980	4.475					**1760.0**
961		73.435	55.622	39.747	34.746	9.139	9.993	4.484					**1761.8**
962		73.511	55.682	39.787	34.785	9.151	10.006	4.493					**1763.6**
963		73.586	55.742	39.826	34.823	9.162	10.019	4.501					**1765.4**
964		73.662	55.803	39.866	34.862	9.174	10.032	4.510					**1767.2**
965		73.738	55.863	39.905	34.901	9.185	10.046	4.519					**1769.0**
966		73.813	55.923	39.944	34.940	9.197	10.059	4.528					**1770.8**
967		73.889	55.983	39.984	34.979	9.208	10.072	4.537					**1772.6**
968		73.964	56.043	40.023	35.017	9.219	10.085	4.546					**1774.4**
969		74.040	56.104	40.062	35.056	9.231	10.098	4.555					**1776.2**
970		74.115	56.164	40.101	35.095	9.242	10.111	4.564					**1778.0**
971		74.190	56.224	40.141	35.134	9.254	10.124	4.573					**1779.8**
972		74.266	56.284	40.180	35.172	9.265	10.137	4.582					**1781.6**
973		74.341	56.344	40.219	35.211	9.277	10.150	4.591					**1783.4**
974		74.417	56.404	40.259	35.250	9.288	10.163	4.599					**1785.2**
975		74.492	56.464	40.298	35.289	9.300	10.177	4.608					**1787.0**
976		74.567	56.524	40.337	35.327	9.311	10.190	4.617					**1788.8**
977		74.643	56.584	40.376	35.366	9.323	10.203	4.626					**1790.6**
978		74.718	56.643	40.415	35.405	9.334	10.216	4.635					**1792.4**
979		74.793	56.703	40.455	35.444	9.345	10.229	4.644					**1794.2**
980		74.869	56.763	40.494	35.482	9.357	10.242	4.653					**1796.0**

°C	Type T	Type E	Type J	Type K	Type N	Type S	Type R	Type B	Type U	Type L	Pt100	Ni100	°F
t90	Cu-CuNi mV	NiCr-CuNi mV	Fe-CuNi mV	NiCr-Ni mV	NiCrSi-NiSi mV	Pt10Rh-Pt mV	Pt13Rh-Pt mV	Pt30Rh-Pt6Rh mV	Cu-CuNi mV	Fe-CuNi mV	Ω	Ω	t90
981		74.944	56.823	40.533	35.521	9.368	10.255	4.662					**1797.8**
982		75.019	56.883	40.572	35.560	9.380	10.269	4.671					**1799.6**
983		75.095	56.942	40.611	35.598	9.391	10.282	4.680					**1801.4**
984		75.170	57.002	40.651	35.637	9.403	10.295	4.689					**1803.2**
985		75.245	57.062	40.690	35.676	9.414	10.308	4.698					**1805.0**
986		75.320	57.121	40.729	35.714	9.426	10.321	4.707					**1806.8**
987		75.395	57.181	40.768	35.753	9.437	10.334	4.716					**1808.6**
988		75.471	57.240	40.807	35.792	9.449	10.348	4.725					**1810.4**
989		75.546	57.300	40.846	35.831	9.460	10.361	4.734					**1812.2**
990		75.621	57.360	40.885	35.869	9.472	10.374	4.743					**1814.0**
991		75.696	57.419	40.924	35.908	9.483	10.387	4.753					**1815.8**
992		75.771	57.479	40.963	35.946	9.495	10.400	4.762					**1817.6**
993		75.847	57.538	41.002	35.985	9.506	10.413	4.771					**1819.4**
994		75.922	57.597	41.042	36.024	9.518	10.427	4.780					**1821.2**
995		75.997	57.657	41.081	36.062	9.529	10.440	4.789					**1823.0**
996		76.072	57.716	41.120	36.101	9.541	10.453	4.798					**1824.8**
997		76.147	57.776	41.159	36.140	9.552	10.466	4.807					**1826.6**
998		76.223	57.835	41.198	36.178	9.564	10.480	4.816					**1828.4**
999		76.298	57.894	41.237	36.217	9.576	10.493	4.825					**1830.2**
1000		76.373	57.953	41.276	36.256	9.587	10.506	4.834					**1832.0**
1001			58.013	41.315	36.294	9.599	10.519	4.843					**1833.8**
1002			58.072	41.354	36.333	9.610	10.532	4.853					**1835.6**
1003			58.131	41.393	36.371	9.622	10.546	4.862					**1837.4**
1004			58.190	41.431	36.410	9.633	10.559	4.871					**1839.2**
1005			58.249	41.470	36.449	9.645	10.572	4.880					**1841.0**
1006			58.309	41.509	36.487	9.656	10.585	4.889					**1842.8**
1007			58.368	41.548	36.526	9.668	10.599	4.898					**1844.6**
1008			58.427	41.587	36.564	9.679	10.612	4.908					**1846.4**
1009			58.486	41.626	36.603	9.691	10.625	4.917					**1848.2**
1010			58.545	41.665	36.641	9.703	10.639	4.926					**1850.0**
1011			58.604	41.704	36.680	9.714	10.652	4.935					**1851.8**
1012			58.663	41.743	36.718	9.726	10.665	4.944					**1853.6**
1013			58.722	41.781	36.757	9.737	10.678	4.954					**1855.4**
1014			58.781	41.820	36.796	9.749	10.692	4.963					**1857.2**
1015			58.840	41.859	36.834	9.761	10.705	4.972					**1859.0**
1016			58.899	41.898	36.873	9.772	10.718	4.981					**1860.8**
1017			58.957	41.937	36.911	9.784	10.732	4.990					**1862.6**
1018			59.016	41.976	36.950	9.795	10.745	5.000					**1864.4**
1019			59.075	42.014	36.988	9.807	10.758	5.009					**1866.2**
1020			59.134	42.053	37.027	9.818	10.771	5.018					**1868.0**
1021			59.193	42.092	37.065	9.830	10.785	5.027					**1869.8**
1022			59.252	42.131	37.104	9.842	10.798	5.037					**1871.6**
1023			59.310	42.169	37.142	9.853	10.811	5.046					**1873.4**
1024			59.369	42.208	37.181	9.865	10.825	5.055					**1875.2**
1025			59.428	42.247	37.219	9.877	10.838	5.065					**1877.0**
1026			59.487	42.286	37.258	9.888	10.851	5.074					**1878.8**
1027			59.545	42.324	37.296	9.900	10.865	5.083					**1880.6**
1028			59.604	42.363	37.334	9.911	10.878	5.092					**1882.4**
1029			59.663	42.402	37.373	9.923	10.891	5.102					**1884.2**
1030			59.721	42.440	37.411	9.935	10.905	5.111					**1886.0**

°C t90	Type T Cu-CuNi mV	Type E NiCr-CuNi mV	Type J Fe-CuNi mV	Type K NiCr-Ni mV	Type N NiCrSi-NiSi mV	Type S Pt10Rh-Pt mV	Type R Pt13Rh-Pt mV	Type B Pt30Rh-Pt6Rh mV	Type U Cu-CuNi mV	Type L Fe-CuNi mV	Pt100 Ω	Ni100 Ω	°F t90
1031			59.780	42.479	37.450	9.946	10.918	5.120					**1887.8**
1032			59.838	42.518	37.488	9.958	10.932	5.130					**1889.6**
1033			59.897	42.556	37.527	9.970	10.945	5.139					**1891.4**
1034			59.956	42.595	37.565	9.981	10.958	5.148					**1893.2**
1035			60.014	42.633	37.603	9.993	10.972	5.158					**1895.0**
1036			60.073	42.672	37.642	10.005	10.985	5.167					**1896.8**
1037			60.131	42.711	37.680	10.016	10.998	5.176					**1898.6**
1038			60.190	42.749	37.719	10.028	11.012	5.186					**1900.4**
1039			60.248	42.788	37.757	10.040	11.025	5.195					**1902.2**
1040			60.307	42.826	37.795	10.051	11.039	5.205					**1904.0**
1041			60.365	42.865	37.834	10.063	11.052	5.214					**1905.8**
1042			60.423	42.903	37.872	10.075	11.065	5.223					**1907.6**
1043			60.482	42.942	37.911	10.086	11.079	5.233					**1909.4**
1044			60.540	42.980	37.949	10.098	11.092	5.242					**1911.2**
1045			60.599	43.019	37.987	10.110	11.106	5.252					**1913.0**
1046			60.657	43.057	38.026	10.121	11.119	5.261					**1914.8**
1047			60.715	43.096	38.064	10.133	11.133	5.270					**1916.6**
1048			60.774	43.134	38.102	10.145	11.146	5.280					**1918.4**
1049			60.832	43.173	38.141	10.156	11.159	5.289					**1920.2**
1050			60.890	43.211	38.179	10.168	11.173	5.299					**1922.0**
1051			60.949	43.250	38.217	10.180	11.186	5.308					**1923.8**
1052			61.007	43.288	38.256	10.191	11.200	5.318					**1925.6**
1053			61.065	43.327	38.294	10.203	11.213	5.327					**1927.4**
1054			61.123	43.365	38.332	10.215	11.227	5.337					**1929.2**
1055			61.182	43.403	38.370	10.227	11.240	5.346					**1931.0**
1056			61.240	43.442	38.409	10.238	11.254	5.356					**1932.8**
1057			61.298	43.480	38.447	10.250	11.267	5.365					**1934.6**
1058			61.356	43.518	38.485	10.262	11.280	5.375					**1936.4**
1059			61.415	43.557	38.524	10.273	11.294	5.384					**1938.2**
1060			61.473	43.595	38.562	10.285	11.307	5.394					**1940.0**
1061			61.531	43.633	38.600	10.297	11.321	5.403					**1941.8**
1062			61.589	43.672	38.638	10.309	11.334	5.413					**1943.6**
1063			61.647	43.710	38.677	10.320	11.348	5.422					**1945.4**
1064			61.705	43.748	38.715	10.332	11.361	5.432					**1947.2**
1065			61.763	43.787	38.753	10.344	11.375	5.441					**1949.0**
1066			61.822	43.825	38.791	10.356	11.388	5.451					**1950.8**
1067			61.880	43.863	38.829	10.367	11.402	5.460					**1952.6**
1068			61.938	43.901	38.868	10.379	11.415	5.470					**1954.4**
1069			61.996	43.940	38.906	10.391	11.429	5.480					**1956.2**
1070			62.054	43.978	38.944	10.403	11.442	5.489					**1958.0**
1071			62.112	44.016	38.982	10.414	11.456	5.499					**1959.8**
1072			62.170	44.054	39.020	10.426	11.469	5.508					**1961.6**
1073			62.228	44.092	39.059	10.438	11.483	5.518					**1963.4**
1074			62.286	44.130	39.097	10.450	11.496	5.528					**1965.2**
1075			62.344	44.169	39.135	10.461	11.510	5.537					**1967.0**
1076			62.402	44.207	39.173	10.473	11.524	5.547					**1968.8**
1077			62.460	44.245	39.211	10.485	11.537	5.556					**1970.6**
1078			62.518	44.283	39.249	10.497	11.551	5.566					**1972.4**
1079			62.576	44.321	39.287	10.509	11.564	5.576					**1974.2**
1080			62.634	44.359	39.326	10.520	11.578	5.585					**1976.0**

°C	Type T	Type E	Type J	Type K	Type N	Type S	Type R	Type B	Type U	Type L	Pt100	Ni100	°F
	Cu-CuNi	NiCr-CuNi	Fe-CuNi	NiCr-Ni	NiCrSi-NiSi	Pt10Rh-Pt	Pt13Rh-Pt	Pt30Rh-Pt6Rh	Cu-CuNi	Fe-CuNi			
t90	mV	mV	mV	mV	mV	mV	mV	mV	mV	mV	Ω	Ω	t90
1081			62.692	44.397	39.364	10.532	11.591	5.595					**1977.8**
1082			62.750	44.435	39.402	10.544	11.605	5.605					**1979.6**
1083			62.808	44.473	39.440	10.556	11.618	5.614					**1981.4**
1084			62.866	44.512	39.478	10.567	11.632	5.624					**1983.2**
1085			62.924	44.550	39.516	10.579	11.646	5.634					**1985.0**
1086			62.982	44.588	39.554	10.591	11.659	5.643					**1986.8**
1087			63.040	44.626	39.592	10.603	11.673	5.653					**1988.6**
1088			63.098	44.664	39.630	10.615	11.686	5.663					**1990.4**
1089			63.156	44.702	39.668	10.626	11.700	5.672					**1992.2**
1090			63.214	44.740	39.706	10.638	11.714	5.682					**1994.0**
1091			63.271	44.778	39.744	10.650	11.727	5.692					**1995.8**
1092			63.329	44.816	39.783	10.662	11.741	5.702					**1997.6**
1093			63.387	44.853	39.821	10.674	11.754	5.711					**1999.4**
1094			63.445	44.891	39.859	10.686	11.768	5.721					**2001.2**
1095			63.503	44.929	39.897	10.697	11.782	5.731					**2003.0**
1096			63.561	44.967	39.935	10.709	11.795	5.740					**2004.8**
1097			63.619	45.005	39.973	10.721	11.809	5.750					**2006.6**
1098			63.677	45.043	40.011	10.733	11.822	5.760					**2008.4**
1099			63.734	45.081	40.049	10.745	11.836	5.770					**2010.2**
1100			63.792	45.119	40.087	10.757	11.850	5.780					**2012.0**
1101			63.850	45.157	40.125	10.768	11.863	5.789					**2013.8**
1102			63.908	45.194	40.163	10.780	11.877	5.799					**2015.6**
1103			63.966	45.232	40.201	10.792	11.891	5.809					**2017.4**
1104			64.024	45.270	40.238	10.804	11.904	5.819					**2019.2**
1105			64.081	45.308	40.276	10.816	11.918	5.828					**2021.0**
1106			64.139	45.346	40.314	10.828	11.931	5.838					**2022.8**
1107			64.197	45.383	40.352	10.839	11.945	5.848					**2024.6**
1108			64.255	45.421	40.390	10.851	11.959	5.858					**2026.4**
1109			64.313	45.459	40.428	10.863	11.972	5.868					**2028.2**
1110			64.370	45.497	40.466	10.875	11.986	5.878					**2030.0**
1111			64.428	45.534	40.504	10.887	12.000	5.887					**2031.8**
1112			64.486	45.572	40.542	10.899	12.013	5.897					**2033.6**
1113			64.544	45.610	40.580	10.911	12.027	5.907					**2035.4**
1114			64.602	45.647	40.618	10.922	12.041	5.917					**2037.2**
1115			64.659	45.685	40.655	10.934	12.054	5.927					**2039.0**
1116			64.717	45.723	40.693	10.946	12.068	5.937					**2040.8**
1117			64.775	45.760	40.731	10.958	12.082	5.947					**2042.6**
1118			64.833	45.798	40.769	10.970	12.096	5.956					**2044.4**
1119			64.890	45.836	40.807	10.982	12.109	5.966					**2046.2**
1120			64.948	45.873	40.845	10.994	12.123	5.976					**2048.0**
1121			65.006	45.911	40.883	11.006	12.137	5.986					**2049.8**
1122			65.064	45.948	40.920	11.017	12.150	5.996					**2051.6**
1123			65.121	45.986	40.958	11.029	12.164	6.006					**2053.4**
1124			65.179	46.024	40.996	11.041	12.178	6.016					**2055.2**
1125			65.237	46.061	41.034	11.053	12.191	6.026					**2057.0**
1126			65.295	46.099	41.072	11.065	12.205	6.036					**2058.8**
1127			65.352	46.136	41.109	11.077	12.219	6.046					**2060.6**
1128			65.410	46.174	41.147	11.089	12.233	6.055					**2062.4**
1129			65.468	46.211	41.185	11.101	12.246	6.065					**2064.2**
1130			65.525	46.249	41.223	11.113	12.260	6.075					**2066.0**

°C t90	Type T Cu-CuNi mV	Type E NiCr-CuNi mV	Type J Fe-CuNi mV	Type K NiCr-Ni mV	Type N NiCrSi-NiSi mV	Type S Pt10Rh-Pt mV	Type R Pt13Rh-Pt mV	Type B Pt30Rh-Pt6Rh mV	Type U Cu-CuNi mV	Type L Fe-CuNi mV	Pt100 Ω	Ni100 Ω	°F t90
1131			65.583	46.286	41.260	11.125	12.274	6.085					**2067.8**
1132			65.641	46.324	41.298	11.136	12.288	6.095					**2069.6**
1133			65.699	46.361	41.336	11.148	12.301	6.105					**2071.4**
1134			65.756	46.398	41.374	11.160	12.315	6.115					**2073.2**
1135			65.814	46.436	41.411	11.172	12.329	6.125					**2075.0**
1136			65.872	46.473	41.449	11.184	12.342	6.135					**2076.8**
1137			65.929	46.511	41.487	11.196	12.356	6.145					**2078.6**
1138			65.987	46.548	41.525	11.208	12.370	6.155					**2080.4**
1139			66.045	46.585	41.562	11.220	12.384	6.165					**2082.2**
1140			66.102	46.623	41.600	11.232	12.397	6.175					**2084.0**
1141			66.160	46.660	41.638	11.244	12.411	6.185					**2085.8**
1142			66.218	46.697	41.675	11.256	12.425	6.195					**2087.6**
1143			66.275	46.735	41.713	11.268	12.439	6.205					**2089.4**
1144			66.333	46.772	41.751	11.280	12.453	6.215					**2091.2**
1145			66.391	46.809	41.788	11.291	12.466	6.225					**2093.0**
1146			66.448	46.847	41.826	11.303	12.480	6.235					**2094.8**
1147			66.506	46.884	41.864	11.315	12.494	6.245					**2096.6**
1148			66.564	46.921	41.901	11.327	12.508	6.256					**2098.4**
1149			66.621	46.958	41.939	11.339	12.521	6.266					**2100.2**
1150			66.679	46.995	41.976	11.351	12.535	6.276					**2102.0**
1151			66.737	47.033	42.014	11.363	12.549	6.286					**2103.8**
1152			66.794	47.070	42.052	11.375	12.563	6.296					**2105.6**
1153			66.852	47.107	42.089	11.387	12.577	6.306					**2107.4**
1154			66.910	47.144	42.127	11.399	12.590	6.316					**2109.2**
1155			66.967	47.181	42.164	11.411	12.604	6.326					**2111.0**
1156			67.025	47.218	42.202	11.423	12.618	6.336					**2112.8**
1157			67.082	47.256	42.239	11.435	12.632	6.346					**2114.6**
1158			67.140	47.293	42.277	11.447	12.646	6.356					**2116.4**
1159			67.198	47.330	42.314	11.459	12.659	6.367					**2118.2**
1160			67.255	47.367	42.352	11.471	12.673	6.377					**2120.0**
1161			67.313	47.404	42.390	11.483	12.687	6.387					**2121.8**
1162			67.370	47.441	42.427	11.495	12.701	6.397					**2123.6**
1163			67.428	47.478	42.465	11.507	12.715	6.407					**2125.4**
1164			67.486	47.515	42.502	11.519	12.729	6.417					**2127.2**
1165			67.543	47.552	42.540	11.531	12.742	6.427					**2129.0**
1166			67.601	47.589	42.577	11.542	12.756	6.438					**2130.8**
1167			67.658	47.626	42.614	11.554	12.770	6.448					**2132.6**
1168			67.716	47.663	42.652	11.566	12.784	6.458					**2134.4**
1169			67.773	47.700	42.689	11.578	12.798	6.468					**2136.2**
1170			67.831	47.737	42.727	11.590	12.812	6.478					**2138.0**
1171			67.888	47.774	42.764	11.602	12.825	6.488					**2139.8**
1172			67.946	47.811	42.802	11.614	12.839	6.499					**2141.6**
1173			68.003	47.848	42.839	11.626	12.853	6.509					**2143.4**
1174			68.061	47.884	42.877	11.638	12.867	6.519					**2145.2**
1175			68.119	47.921	42.914	11.650	12.881	6.529					**2147.0**
1176			68.176	47.958	42.951	11.662	12.895	6.539					**2148.8**
1177			68.234	47.995	42.989	11.674	12.909	6.550					**2150.6**
1178			68.291	48.032	43.026	11.686	12.922	6.560					**2152.4**
1179			68.348	48.069	43.064	11.698	12.936	6.570					**2154.2**
1180			68.406	48.105	43.101	11.710	12.950	6.580					**2156.0**

°C t90	Type T Cu-CuNi mV	Type E NiCr-CuNi mV	Type J Fe-CuNi mV	Type K NiCr-Ni mV	Type N NiCrSi-NiSi mV	Type S Pt10Rh-Pt mV	Type R Pt13Rh-Pt mV	Type B Pt30Rh-Pt6Rh mV	Type U Cu-CuNi mV	Type L Fe-CuNi mV	Pt100 Ω	Ni100 Ω	°F t90
1181			68.463	48.142	43.138	11.722	12.964	6.591					**2157.8**
1182			68.521	48.179	43.176	11.734	12.978	6.601					**2159.6**
1183			68.578	48.216	43.213	11.746	12.992	6.611					**2161.4**
1184			68.636	48.252	43.250	11.758	13.006	6.621					**2163.2**
1185			68.693	48.289	43.288	11.770	13.019	6.632					**2165.0**
1186			68.751	48.326	43.325	11.782	13.033	6.642					**2166.8**
1187			68.808	48.363	43.362	11.794	13.047	6.652					**2168.6**
1188			68.865	48.399	43.399	11.806	13.061	6.663					**2170.4**
1189			68.923	48.436	43.437	11.818	13.075	6.673					**2172.2**
1190			68.980	48.473	43.474	11.830	13.089	6.683					**2174.0**
1191			69.037	48.509	43.511	11.842	13.103	6.693					**2175.8**
1192			69.095	48.546	43.549	11.854	13.117	6.704					**2177.6**
1193			69.152	48.582	43.586	11.866	13.131	6.714					**2179.4**
1194			69.209	48.619	43.623	11.878	13.145	6.724					**2181.2**
1195			69.267	48.656	43.660	11.890	13.158	6.735					**2183.0**
1196			69.324	48.692	43.698	11.902	13.172	6.745					**2184.8**
1197			69.381	48.729	43.735	11.914	13.186	6.755					**2186.6**
1198			69.439	48.765	43.772	11.926	13.200	6.766					**2188.4**
1199			69.496	48.802	43.809	11.939	13.214	6.776					**2190.2**
1200			69.553	48.838	43.846	11.951	13.228	6.786					**2192.0**
1201				48.875	43.884	11.963	13.242	6.797					**2193.8**
1202				48.911	43.921	11.975	13.256	6.807					**2195.6**
1203				48.948	43.958	11.987	13.270	6.818					**2197.4**
1204				48.984	43.995	11.999	13.284	6.828					**2199.2**
1205				49.021	44.032	12.011	13.298	6.838					**2201.0**
1206				49.057	44.069	12.023	13.311	6.849					**2202.8**
1207				49.093	44.106	12.035	13.325	6.859					**2204.6**
1208				49.130	44.144	12.047	13.339	6.869					**2206.4**
1209				49.166	44.181	12.059	13.353	6.880					**2208.2**
1210				49.202	44.218	12.071	13.367	6.890					**2210.0**
1211				49.239	44.255	12.083	13.381	6.901					**2211.8**
1212				49.275	44.292	12.095	13.395	6.911					**2213.6**
1213				49.311	44.329	12.107	13.409	6.922					**2215.4**
1214				49.348	44.366	12.119	13.423	6.932					**2217.2**
1215				49.384	44.403	12.131	13.437	6.942					**2219.0**
1216				49.420	44.440	12.143	13.451	6.953					**2220.8**
1217				49.456	44.477	12.155	13.465	6.963					**2222.6**
1218				49.493	44.514	12.167	13.479	6.974					**2224.4**
1219				49.529	44.551	12.179	13.493	6.984					**2226.2**
1220				49.565	44.588	12.191	13.507	6.995					**2228.0**
1221				49.601	44.625	12.203	13.521	7.005					**2229.8**
1222				49.637	44.662	12.216	13.535	7.016					**2231.6**
1223				49.674	44.699	12.228	13.549	7.026					**2233.4**
1224				49.710	44.736	12.240	13.563	7.037					**2235.2**
1225				49.746	44.773	12.252	13.577	7.047					**2237.0**
1226				49.782	44.810	12.264	13.590	7.058					**2238.8**
1227				49.818	44.847	12.276	13.604	7.068					**2240.6**
1228				49.854	44.884	12.288	13.618	7.079					**2242.4**
1229				49.890	44.921	12.300	13.632	7.089					**2244.2**
1230				49.926	44.958	12.312	13.646	7.100					**2246.0**

°C t90	Type T Cu-CuNi mV	Type E NiCr-CuNi mV	Type J Fe-CuNi mV	Type K NiCr-Ni mV	Type N NiCrSi-NiSi mV	Type S Pt10Rh-Pt mV	Type R Pt13Rh-Pt mV	Type B Pt30Rh-Pt6Rh mV	Type U Cu-CuNi mV	Type L Fe-CuNi mV	Pt100 Ω	Ni100 Ω	°F t90
1231				49.962	44.995	12.324	13.660	7.110					**2247.8**
1232				49.998	45.032	12.336	13.674	7.121					**2249.6**
1233				50.034	45.069	12.348	13.688	7.131					**2251.4**
1234				50.070	45.105	12.360	13.702	7.142					**2253.2**
1235				50.106	45.142	12.372	13.716	7.152					**2255.0**
1236				50.142	45.179	12.384	13.730	7.163					**2256.8**
1237				50.178	45.216	12.397	13.744	7.173					**2258.6**
1238				50.214	45.253	12.409	13.758	7.184					**2260.4**
1239				50.250	45.290	12.421	13.772	7.194					**2262.2**
1240				50.286	45.326	12.433	13.786	7.205					**2264.0**
1241				50.322	45.363	12.445	13.800	7.216					**2265.8**
1242				50.358	45.400	12.457	13.814	7.226					**2267.6**
1243				50.393	45.437	12.469	13.828	7.237					**2269.4**
1244				50.429	45.474	12.481	13.842	7.247					**2271.2**
1245				50.465	45.510	12.493	13.856	7.258					**2273.0**
1246				50.501	45.547	12.505	13.870	7.269					**2274.8**
1247				50.537	45.584	12.517	13.884	7.279					**2276.6**
1248				50.572	45.621	12.529	13.898	7.290					**2278.4**
1249				50.608	45.657	12.542	13.912	7.300					**2280.2**
1250				50.644	45.694	12.554	13.926	7.311					**2282.0**
1251				50.680	45.731	12.566	13.940	7.322					**2283.8**
1252				50.715	45.767	12.578	13.954	7.332					**2285.6**
1253				50.751	45.804	12.590	13.968	7.343					**2287.4**
1254				50.787	45.841	12.602	13.982	7.353					**2289.2**
1255				50.822	45.877	12.614	13.996	7.364					**2291.0**
1256				50.858	45.914	12.626	14.010	7.375					**2292.8**
1257				50.894	45.951	12.638	14.024	7.385					**2294.6**
1258				50.929	45.987	12.650	14.038	7.396					**2296.4**
1259				50.965	46.024	12.662	14.052	7.407					**2298.2**
1260				51.000	46.060	12.675	14.066	7.417					**2300.0**
1261				51.036	46.097	12.687	14.081	7.428					**2301.8**
1262				51.071	46.133	12.699	14.095	7.439					**2303.6**
1263				51.107	46.170	12.711	14.109	7.449					**2305.4**
1264				51.142	46.207	12.723	14.123	7.460					**2307.2**
1265				51.178	46.243	12.735	14.137	7.471					**2309.0**
1266				51.213	46.280	12.747	14.151	7.482					**2310.8**
1267				51.249	46.316	12.759	14.165	7.492					**2312.6**
1268				51.284	46.353	12.771	14.179	7.503					**2314.4**
1269				51.320	46.389	12.783	14.193	7.514					**2316.2**
1270				51.355	46.425	12.796	14.207	7.524					**2318.0**
1271				51.391	46.462	12.808	14.221	7.535					**2319.8**
1272				51.426	46.498	12.820	14.235	7.546					**2321.6**
1273				51.461	46.535	12.832	14.249	7.557					**2323.4**
1274				51.497	46.571	12.844	14.263	7.567					**2325.2**
1275				51.532	46.608	12.856	14.277	7.578					**2327.0**
1276				51.567	46.644	12.868	14.291	7.589					**2328.8**
1277				51.603	46.680	12.880	14.305	7.600					**2330.6**
1278				51.638	46.717	12.892	14.319	7.610					**2332.4**
1279				51.673	46.753	12.905	14.333	7.621					**2334.2**
1280				51.708	46.789	12.917	14.347	7.632					**2336.0**

°C t90	Type T Cu-CuNi mV	Type E NiCr-CuNi mV	Type J Fe-CuNi mV	Type K NiCr-Ni mV	Type N NiCrSi-NiSi mV	Type S Pt10Rh-Pt mV	Type R Pt13Rh-Pt mV	Type B Pt30Rh-Pt6Rh mV	Type U Cu-CuNi mV	Type L Fe-CuNi mV	Pt100 Ω	Ni100 Ω	°F t90
1281				51.744	46.826	12.929	14.361	7.643					**2337.8**
1282				51.779	46.862	12.941	14.375	7.653					**2339.6**
1283				51.814	46.898	12.953	14.390	7.664					**2341.4**
1284				51.849	46.935	12.965	14.404	7.675					**2343.2**
1285				51.885	46.971	12.977	14.418	7.686					**2345.0**
1286				51.920	47.007	12.989	14.432	7.697					**2346.8**
1287				51.955	47.043	13.001	14.446	7.707					**2348.6**
1288				51.990	47.079	13.014	14.460	7.718					**2350.4**
1289				52.025	47.116	13.026	14.474	7.729					**2352.2**
1290				52.060	47.152	13.038	14.488	7.740					**2354.0**
1291				52.095	47.188	13.050	14.502	7.751					**2355.8**
1292				52.130	47.224	13.062	14.516	7.761					**2357.6**
1293				52.165	47.260	13.074	14.530	7.772					**2359.4**
1294				52.200	47.296	13.086	14.544	7.783					**2361.2**
1295				52.235	47.333	13.098	14.558	7.794					**2363.0**
1296				52.270	47.369	13.111	14.572	7.805					**2364.8**
1297				52.305	47.405	13.123	14.586	7.816					**2366.6**
1298				52.340	47.441	13.135	14.601	7.827					**2368.4**
1299				52.375	47.477	13.147	14.615	7.837					**2370.2**
1300				52.410	47.513	13.159	14.629	7.848					**2372.0**
1301				52.445		13.171	14.643	7.859					**2373.8**
1302				52.480		13.183	14.657	7.870					**2375.6**
1303				52.515		13.195	14.671	7.881					**2377.4**
1304				52.550		13.208	14.685	7.892					**2379.2**
1305				52.585		13.220	14.699	7.903					**2381.0**
1306				52.620		13.232	14.713	7.914					**2382.8**
1397				52.654		13.244	14.727	7.924					**2384.6**
1308				52.689		13.256	14.741	7.935					**2386.4**
1309				52.724		13.268	14.755	7.946					**2388.2**
1310				52.759		13.280	14.770	7.957					**2390.0**
1311				52.794		13.292	14.784	7.968					**2391.8**
1312				52.828		13.305	14.798	7.979					**2393.6**
1313				52.863		13.317	14.812	7.990					**2395.4**
1314				52.898		13.329	14.826	8.001					**2397.2**
1315				52.932		13.341	14.840	8.012					**2399.0**
1316				52.967		13.353	14.854	8.023					**2400.8**
1317				53.002		13.365	14.868	8.034					**2402.6**
1318				53.037		13.377	14.882	8.045					**2404.4**
1319				53.071		13.390	14.896	8.056					**2406.2**
1320				53.106		13.402	14.911	8.066					**2408.0**
1321				53.140		13.414	14.925	8.077					**2409.8**
1322				53.175		13.426	14.939	8.088					**2411.6**
1323				53.210		13.438	14.953	8.099					**2413.4**
1324				53.244		13.450	14.967	8.110					**2415.2**
1325				53.279		13.462	14.981	8.121					**2417.0**
1326				53.313		13.474	14.995	8.132					**2418.8**
1327				53.348		13.487	15.009	8.143					**2420.6**
1328				53.382		13.499	15.023	8.154					**2422.4**
1329				53.417		13.511	15.037	8.165					**2424.2**
1330				53.451		13.523	15.052	8.176					**2426.0**

°C	Type T	Type E	Type J	Type K	Type N	Type S	Type R	Type B	Type U	Type L	Pt100	Ni100	°F
	Cu-CuNi	NiCr-CuNi	Fe-CuNi	NiCr-Ni	NiCrSi-NiSi	Pt10Rh-Pt	Pt13Rh-Pt	Pt30Rh-Pt6Rh	Cu-CuNi	Fe-CuNi			
t90	mV	mV	mV	mV	mV	mV	mV	mV	mV	mV	Ω	Ω	t90
1331				53.486		13.535	15.066	8.187					**2427.8**
1332				53.520		13.547	15.080	8.198					**2429.6**
1333				53.555		13.559	15.094	8.209					**2431.4**
1334				53.589		13.572	15.108	8.220					**2433.2**
1335				53.623		13.584	15.122	8.231					**2435.0**
1336				53.658		13.596	15.136	8.242					**2436.8**
1337				53.692		13.608	15.150	8.253					**2438.6**
1338				53.727		13.620	15.164	8.264					**2440.4**
1339				53.761		13.632	15.179	8.275					**2442.2**
1340				53.795		13.644	15.193	8.286					**2444.0**
1341				53.830		13.657	15.207	8.298					**2445.8**
1342				53.864		13.669	15.221	8.309					**2447.6**
1343				53.898		13.681	15.235	8.320					**2449.4**
1344				53.932		13.693	15.249	8.331					**2451.2**
1345				53.967		13.705	15.263	8.342					**2453.0**
1346				54.001		13.717	15.277	8.353					**2454.8**
1347				54.035		13.729	15.291	8.364					**2456.6**
1348				54.069		13.742	15.306	8.375					**2458.4**
1349				54.104		13.754	15.320	8.386					**2460.2**
1350				54.138		13.766	15.334	8.397					**2462.0**
1351				54.172		13.778	15.348	8.408					**2463.8**
1352				54.206		13.790	15.362	8.419					**2465.6**
1353				54.240		13.802	15.376	8.430					**2467.4**
1354				54.274		13.814	15.390	8.441					**2469.2**
1355				54.308		13.826	15.404	8.453					**2471.0**
1356				54.343		13.839	15.419	8.464					**2472.8**
1357				54.377		13.851	15.433	8.475					**2474.6**
1358				54.411		13.863	15.447	8.486					**2476.4**
1359				54.445		13.875	15.461	8.497					**2478.2**
1360				54.479		13.887	15.475	8.508					**2480.0**
1361				54.513		13.899	15.489	8.519					**2481.8**
1362				54.547		13.911	15.503	8.530					**2483.6**
1363				54.581		13.924	15.517	8.542					**2485.4**
1364				54.615		13.936	15.531	8.553					**2487.2**
1365				54.649		13.948	15.546	8.564					**2489.0**
1366				54.683		13.960	15.560	8.575					**2490.8**
1367				54.717		13.972	15.574	8.586					**2492.6**
1368				54.751		13.984	15.588	8.597					**2494.4**
1369				54.785		13.996	15.602	8.608					**2496.2**
1370				54.819		14.009	15.616	8.620					**2498.0**
1371				54.852		14.021	15.630	8.631					**2499.8**
1372				54.886		14.033	15.645	8.642					**2501.6**
1373						14.045	15.659	8.653					**2503.4**
1374						14.057	15.673	8.664					**2505.2**
1375						14.069	15.687	8.675					**2507.0**
1376						14.081	15.701	8.687					**2508.8**
1377						14.094	15.715	8.698					**2510.6**
1378						14.106	15.729	8.709					**2512.4**
1379						14.118	15.743	8.720					**2514.2**
1380						14.130	15.758	8.731					**2516.0**

°C t90	Type T Cu-CuNi mV	Type E NiCr-CuNi mV	Type J Fe-CuNi mV	Type K NiCr-Ni mV	Type N NiCrSi-NiSi mV	Type S Pt10Rh-Pt mV	Type R Pt13Rh-Pt mV	Type B Pt30Rh-Pt6Rh mV	Type U Cu-CuNi mV	Type L Fe-CuNi mV	Pt100 Ω	Ni100 Ω	°F t90
1381						14.142	15.772	8.743					**2517.8**
1382						14.154	15.786	8.754					**2519.6**
1383						14.166	15.800	8.765					**2521.4**
1384						14.178	15.814	8.776					**2523.2**
1385						14.191	15.828	8.787					**2525.0**
1386						14.203	15.842	8.799					**2526.8**
1387						14.215	15.856	8.810					**2528.6**
1388						14.227	15.871	8.821					**2530.4**
1389						14.239	15.885	8.832					**2532.2**
1390						14.251	15.899	8.844					**2534.0**
1391						14.263	15.913	8.855					**2535.8**
1392						14.276	15.927	8.866					**2537.6**
1393						14.288	15.941	8.877					**2539.4**
1394						14.300	15.955	8.889					**2541.2**
1395						14.312	15.969	8.900					**2543.0**
1396						14.324	15.984	8.911					**2544.8**
1397						14.336	15.998	8.922					**2546.6**
1398						14.348	16.012	8.934					**2548.4**
1399						14.360	16.026	8.945					**2550.2**
1400						14.373	16.040	8.956					**2552.0**
1401						14.385	16.054	8.967					**2553.8**
1402						14.397	16.068	8.979					**2555.6**
1403						14.409	16.082	8.990					**2557.4**
1404						14.421	16.097	9.001					**2559.2**
1405						14.433	16.111	9.013					**2561.0**
1406						14.445	16.125	9.024					**2562.8**
1407						14.457	16.139	9.035					**2564.6**
1408						14.470	16.153	9.047					**2566.4**
1409						14.482	16.167	9.058					**2568.2**
1410						14.494	16.181	9.069					**2570.0**
1411						14.506	16.196	9.080					**2571.8**
1412						14.518	16.210	9.092					**2573.6**
1413						14.530	16.224	9.103					**2575.4**
1414						14.542	16.238	9.114					**2577.2**
1415						14.554	16.252	9.126					**2579.0**
1416						14.567	16.266	9.137					**2580.8**
1417						14.579	16.280	9.148					**2582.6**
1418						14.591	16.294	9.160					**2584.4**
1419						14.603	16.309	9.171					**2586.2**
1420						14.615	16.323	9.182					**2588.0**
1421						14.627	16.337	9.194					**2589.8**
1422						14.639	16.351	9.205					**2591.6**
1423						14.651	16.365	9.216					**2593.4**
1424						14.664	16.379	9.228					**2595.2**
1425						14.676	16.393	9.239					**2597.0**
1426						14.688	16.407	9.251					**2598.8**
1427						14.700	16.422	9.262					**2600.6**
1428						14.712	16.436	9.273					**2602.4**
1429						14.724	16.450	9.285					**2604.2**
1430						14.736	16.464	9.296					**2606.0**

°C t90	Type T Cu-CuNi mV	Type E NiCr-CuNi mV	Type J Fe-CuNi mV	Type K NiCr-Ni mV	Type N NiCrSi-NiSi mV	Type S Pt10Rh-Pt mV	Type R Pt13Rh-Pt mV	Type B Pt30Rh-Pt6Rh mV	Type U Cu-CuNi mV	Type L Fe-CuNi mV	Pt100 Ω	Ni100 Ω	°F t90
1431						14.748	16.478	9.307					**2607.8**
1432						14.760	16.492	9.319					**2609.6**
1433						14.773	16.506	9.330					**2611.4**
1434						14.785	16.520	9.342					**2613.2**
1435						14.797	16.534	9.353					**2615.0**
1436						14.809	16.549	9.364					**2616.8**
1437						14.821	16.563	9.376					**2618.6**
1438						14.833	16.577	9.387					**2620.4**
1439						14.845	16.591	9.398					**2622.2**
1440						14.857	16.605	9.410					**2624.0**
1441						14.869	16.619	9.421					**2625.8**
1442						14.881	16.633	9.433					**2627.6**
1443						14.894	16.647	9.444					**2629.4**
1444						14.906	16.662	9.456					**2631.2**
1445						14.918	16.676	9.467					**2633.0**
1446						14.930	16.690	9.478					**2634.8**
1447						14.942	16.704	9.490					**2636.6**
1448						14.954	16.718	9.501					**2638.4**
1449						14.966	16.732	9.513					**2640.2**
1450						14.978	16.746	9.524					**2642.0**
1451						14.990	16.760	9.536					**2643.8**
1452						15.002	16.774	9.547					**2645.6**
1453						15.015	16.789	9.558					**2647.4**
1454						15.027	16.803	9.570					**2649.2**
1455						15.039	16.817	9.581					**2651.0**
1456						15.051	16.831	9.593					**2652.8**
1457						15.063	16.845	9.604					**2654.6**
1458						15.075	16.859	9.616					**2656.4**
1459						15.087	16.873	9.627					**2658.2**
1460						15.099	16.887	9.639					**2660.0**
1461						15.111	16.901	9.650					**2661.8**
1462						15.123	16.915	9.662					**2663.6**
1463						15.135	16.930	9.673					**2665.4**
1464						15.148	16.944	9.684					**2667.2**
1465						15.160	16.958	9.696					**2669.0**
1466						15.172	16.972	9.707					**2670.8**
1467						15.184	16.986	9.719					**2672.6**
1468						15.196	17.000	9.730					**2674.4**
1469						15.208	17.014	9.742					**2676.2**
1470						15.220	17.028	9.753					**2678.0**
1471						15.232	17.042	9.765					**2679.8**
1472						15.244	17.056	9.776					**2681.6**
1473						15.256	17.071	9.788					**2683.4**
1474						15.268	17.085	9.799					**2685.2**
1475						15.280	17.099	9.811					**2687.0**
1476						15.292	17.113	9.822					**2688.8**
1477						15.304	17.127	9.834					**2690.6**
1478						15.317	17.141	9.845					**2692.4**
1479						15.329	17.155	9.857					**2694.2**
1480						15.341	17.169	9.868					**2696.0**

°C t90	Type T Cu-CuNi mV	Type E NiCr-CuNi mV	Type J Fe-CuNi mV	Type K NiCr-Ni mV	Type N NiCrSi-NiSi mV	Type S Pt10Rh-Pt mV	Type R Pt13Rh-Pt mV	Type B Pt30Rh-Pt6Rh mV	Type U Cu-CuNi mV	Type L Fe-CuNi mV	Pt100 Ω	Ni100 Ω	°F t90
1481						15.353	17.183	9.880					**2697.8**
1482						15.365	17.197	9.891					**2699.6**
1483						15.377	17.211	9.903					**2701.4**
1484						15.389	17.225	9.914					**2703.2**
1485						15.401	17.240	9.926					**2705.0**
1486						15.413	17.254	9.937					**2706.8**
1487						15.425	17.268	9.949					**2708.6**
1488						15.437	17.282	9.961					**2710.4**
1489						15.449	17.296	9.972					**2712.2**
1490						15.461	17.310	9.984					**2714.0**
1491						15.473	17.324	9.995					**2715.8**
1492						15.485	17.338	10.007					**2717.6**
1493						15.497	17.352	10.018					**2719.4**
1494						15.509	17.366	10.030					**2721.2**
1495						15.521	17.380	10.041					**2723.0**
1496						15.534	17.394	10.053					**2724.8**
1497						15.546	17.408	10.064					**2726.6**
1498						15.558	17.423	10.076					**2728.4**
1499						15.570	17.437	10.088					**2730.2**
1500						15.582	17.451	10.099					**2732.0**
1501						15.594	17.465	10.111					**2733.8**
1502						15.606	17.479	10.122					**2735.6**
1503						15.618	17.493	10.134					**2737.4**
1504						15.630	17.507	10.145					**2739.2**
1505						15.642	17.521	10.157					**2741.0**
1506						15.654	17.535	10.168					**2742.8**
1507						15.666	17.549	10.180					**2744.6**
1508						15.678	17.563	10.192					**2746.4**
1509						15.690	17.577	10.203					**2748.2**
1510						15.702	17.591	10.215					**2750.0**
1511						15.714	17.605	10.226					**2751.8**
1512						15.726	17.619	10.238					**2753.6**
1513						15.738	17.633	10.249					**2755.4**
1514						15.750	17.647	10.261					**2757.2**
1515						15.762	17.661	10.273					**2759.0**
1516						15.774	17.676	10.284					**2760.8**
1517						15.786	17.690	10.296					**2762.6**
1518						15.798	17.704	10.307					**2764.4**
1519						15.810	17.718	10.319					**2766.2**
1520						15.822	17.732	10.331					**2768.0**
1521						15.834	17.746	10.342					**2769.8**
1522						15.846	17.760	10.354					**2771.6**
1523						15.858	17.774	10.365					**2773.4**
1524						15.870	17.788	10.377					**2775.2**
1525						15.882	17.802	10.389					**2777.0**
1526						15.894	17.816	10.400					**2778.8**
1527						15.906	17.830	10.412					**2780.6**
1528						15.918	17.844	10.423					**2782.4**
1529						15.930	17.858	10.435					**2784.2**
1530						15.942	17.872	10.447					**2786.0**

°C	Type T	Type E	Type J	Type K	Type N	Type S	Type R	Type B	Type U	Type L	Pt100	Ni100	°F
t90	Cu-CuNi mV	NiCr-CuNi mV	Fe-CuNi mV	NiCr-Ni mV	NiCrSi-NiSi mV	Pt10Rh-Pt mV	Pt13Rh-Pt mV	Pt30Rh-Pt6Rh mV	Cu-CuNi mV	Fe-CuNi mV	Ω	Ω	t90
1531						15.954	17.886	10.458					**2787.8**
1532						15.966	17.900	10.470					**2789.6**
1533						15.978	17.914	10.482					**2791.4**
1534						15.990	17.928	10.493					**2793.2**
1535						16.002	17.942	10.505					**2795.0**
1536						16.014	17.956	10.516					**2796.8**
1537						16.026	17.970	10.528					**2798.6**
1538						16.038	17.984	10.540					**2800.4**
1539						16.050	17.998	10.551					**2802.2**
1540						16.062	18.012	10.563					**2804.0**
1541						16.074	18.026	10.575					**2805.8**
1542						16.086	18.040	10.586					**2807.6**
1543						16.098	18.054	10.598					**2809.4**
1544						16.110	18.068	10.609					**2811.2**
1545						16.122	18.082	10.621					**2813.0**
1546						16.134	18.096	10.633					**2814.8**
1547						16.146	18.110	10.644					**2816.6**
1548						16.158	18.124	10.656					**2818.4**
1549						16.170	18.138	10.668					**2820.2**
1550						16.182	18.152	10.679					**2822.0**
1551						16.194	18.166	10.691					**2823.8**
1552						16.205	18.180	10.703					**2825.6**
1553						16.217	18.194	10.714					**2827.4**
1554						16.229	18.208	10.726					**2829.2**
1555						16.241	18.222	10.738					**2831.0**
1556						16.253	18.236	10.749					**2832.8**
1557						16.265	18.250	10.761					**2834.6**
1558						16.277	18.264	10.773					**2836.4**
1559						16.289	18.278	10.784					**2838.2**
1560						16.301	18.292	10.796					**2840.0**
1561						16.313	18.306	10.808					**2841.8**
1562						16.325	18.320	10.819					**2843.6**
1563						16.337	18.334	10.831					**2845.4**
1564						16.349	18.348	10.843					**2847.2**
1565						16.361	18.362	10.854					**2849.0**
1566						16.373	18.376	10.866					**2850.8**
1567						16.385	18.390	10.877					**2852.6**
1568						16.396	18.404	10.889					**2854.4**
1569						16.408	18.417	10.901					**2856.2**
1570						16.420	18.431	10.913					**2858.0**
1571						16.432	18.445	10.924					**2859.8**
1572						16.444	18.459	10.936					**2861.6**
1573						16.456	18.473	10.948					**2863.4**
1574						16.468	18.487	10.959					**2865.2**
1575						16.480	18.501	10.971					**2867.0**
1576						16.492	18.515	10.983					**2868.8**
1577						16.504	18.529	10.994					**2870.6**
1578						16.516	18.543	11.006					**2872.4**
1579						16.527	18.557	11.018					**2874.2**
1580						16.539	18.571	11.029					**2876.0**

°C	Type T	Type E	Type J	Type K	Type N	Type S	Type R	Type B	Type U	Type L	Pt100	Ni100	°F
t90	Cu-CuNi mV	NiCr-CuNi mV	Fe-CuNi mV	NiCr-Ni mV	NiCrSi-NiSi mV	Pt10Rh-Pt mV	Pt13Rh-Pt mV	Pt30Rh-Pt6Rh mV	Cu-CuNi mV	Fe-CuNi mV	Ω	Ω	t90
1581						16.551	18.585	11.041					**2877.8**
1582						16.563	18.599	11.053					**2879.6**
1583						16.575	18.613	11.064					**2881.4**
1584						16.587	18.627	11.076					**2883.2**
1585						16.599	18.640	11.088					**2885.0**
1586						16.611	18.654	11.099					**2886.8**
1587						16.623	18.668	11.111					**2888.6**
1588						16.634	18.682	11.123					**2890.4**
1589						16.646	18.696	11.134					**2892.2**
1590						16.658	18.710	11.146					**2894.0**
1591						16.670	18.724	11.158					**2895.8**
1592						16.682	18.738	11.169					**2897.6**
1593						16.694	18.752	11.181					**2899.4**
1594						16.706	18.766	11.193					**2901.2**
1595						16.718	18.779	11.205					**2903.0**
1596						16.729	18.793	11.216					**2904.8**
1597						16.741	18.807	11.228					**2906.6**
1598						16.753	18.821	11.240					**2908.4**
1599						16.765	18.835	11.251					**2910.2**
1600						16.777	18.849	11.263					**2912.0**
1601						16.789	18.863	11.275					**2913.8**
1602						16.801	18.877	11.286					**2915.6**
1603						16.812	18.891	11.298					**2917.4**
1604						16.824	18.904	11.310					**2919.2**
1605						16.836	18.918	11.321					**2921.0**
1606						16.848	18.932	11.333					**2922.8**
1607						16.860	18.946	11.345					**2924.6**
1608						16.872	18.960	11.357					**2926.4**
1609						16.883	18.974	11.368					**2928.2**
1610						16.895	18.988	11.380					**2930.0**
1611						16.907	19.002	11.392					**2931.8**
1612						16.919	19.015	11.403					**2933.6**
1613						16.931	19.029	11.415					**2935.4**
1614						16.943	19.043	11.427					**2937.2**
1615						16.954	19.057	11.438					**2939.0**
1616						16.966	19.071	11.450					**2940.8**
1617						16.978	19.085	11.462					**2942.6**
1618						16.990	19.098	11.474					**2944.4**
1619						17.002	19.112	11.485					**2946.2**
1620						17.013	19.126	11.497					**2948.0**
1621						17.025	19.140	11.509					**2949.8**
1622						17.037	19.154	11.520					**2951.6**
1623						17.049	19.168	11.532					**2953.4**
1624						17.061	19.181	11.544					**2955.2**
1625						17.072	19.195	11.555					**2957.0**
1626						17.084	19.209	11.567					**2958.8**
1627						17.096	19.223	11.579					**2960.6**
1628						17.108	19.237	11.591					**2962.4**
1629						17.120	19.250	11.602					**2964.2**
1630						17.131	19.264	11.614					**2966.0**

°C t90	Type T Cu-CuNi mV	Type E NiCr-CuNi mV	Type J Fe-CuNi mV	Type K NiCr-Ni mV	Type N NiCrSi-NiSi mV	Type S Pt10Rh-Pt mV	Type R Pt13Rh-Pt mV	Type B Pt30Rh-Pt6Rh mV	Type U Cu-CuNi mV	Type L Fe-CuNi mV	Pt100 Ω	Ni100 Ω	°F t90
1631						17.143	19.278	11.626					**2967.8**
1632						17.155	19.292	11.637					**2969.6**
1633						17.167	19.306	11.649					**2971.4**
1634						17.178	19.319	11.661					**2973.2**
1635						17.190	19.333	11.673					**2975.0**
1636						17.202	19.347	11.684					**2976.8**
1637						17.214	19.361	11.696					**2978.6**
1638						17.225	19.375	11.708					**2980.4**
1639						17.237	19.388	11.719					**2982.2**
1640						17.249	19.402	11.731					**2984.0**
1641						17.261	19.416	11.743					**2985.8**
1642						17.272	19.430	11.754					**2987.6**
1643						17.284	19.444	11.766					**2989.4**
1644						17.296	19.457	11.778					**2991.2**
1645						17.308	19.471	11.790					**2993.0**
1646						17.319	19.485	11.801					**2994.8**
1647						17.331	19.499	11.813					**2996.6**
1648						17.343	19.512	11.825					**2998.4**
1649						17.355	19.526	11.836					**3000.2**
1650						17.366	19.540	11.848					**3002.0**
1651						17.378	19.554	11.860					**3003.8**
1652						17.390	19.567	11.871					**3005.6**
1653						17.401	19.581	11.883					**3007.4**
1654						17.413	19.595	11.895					**3009.2**
1655						17.425	19.609	11.907					**3011.0**
1656						17.437	19.622	11.918					**3012.8**
1657						17.448	19.636	11.930					**3014.6**
1658						17.460	19.650	11.942					**3016.4**
1659						17.472	19.663	11.953					**3018.2**
1660						17.483	19.677	11.965					**3020.0**
1661						17.495	19.691	11.977					**3021.8**
1662						17.507	19.705	11.988					**3023.6**
1663						17.518	19.718	12.000					**3025.4**
1664						17.530	19.732	12.012					**3027.2**
1665						17.542	19.746	12.024					**3029.0**
1666						17.553	19.759	12.035					**3030.8**
1667						17.565	19.773	12.047					**3032.6**
1668						17.577	19.787	12.059					**3034.4**
1669						17.588	19.800	12.070					**3036.2**
1670						17.600	19.814	12.082					**3038.0**
1671						17.612	19.828	12.094					**3039.8**
1672						17.623	19.841	12.105					**3041.6**
1673						17.635	19.855	12.117					**3043.4**
1674						17.647	19.869	12.129					**3045.2**
1675						17.658	19.882	12.141					**3047.0**
1676						17.670	19.896	12.152					**3048.8**
1677						17.682	19.910	12.164					**3050.6**
1678						17.693	19.923	12.176					**3052.4**
1679						17.705	19.937	12.187					**3054.2**
1680						17.717	19.951	12.199					**3056.0**

°C t90	Type T Cu-CuNi mV	Type E NiCr-CuNi mV	Type J Fe-CuNi mV	Type K NiCr-Ni mV	Type N NiCrSi-NiSi mV	Type S Pt10Rh-Pt mV	Type R Pt13Rh-Pt mV	Type B Pt30Rh-Pt6Rh mV	Type U Cu-CuNi mV	Type L Fe-CuNi mV	Pt100 Ω	Ni100 Ω	°F t90
1681						17.728	19.964	12.211					**3057.8**
1682						17.740	19.978	12.222					**3059.6**
1683						17.751	19.992	12.234					**3061.4**
1684						17.763	20.005	12.246					**3063.2**
1685						17.775	20.019	12.257					**3065.0**
1686						17.786	20.032	12.269					**3066.8**
1687						17.798	20.046	12.281					**3068.6**
1688						17.809	20.060	12.292					**3070.4**
1689						17.821	20.073	12.304					**3072.2**
1690						17.832	20.087	12.316					**3074.0**
1691						17.844	20.100	12.327					**3075.8**
1692						17.855	20.114	12.339					**3077.6**
1693						17.867	20.127	12.351					**3079.4**
1694						17.878	20.141	12.363					**3081.2**
1695						17.890	20.154	12.374					**3083.0**
1696						17.901	20.168	12.386					**3084.8**
1697						17.913	20.181	12.398					**3086.6**
1698						17.924	20.195	12.409					**3088.4**
1699						17.936	20.208	12.421					**3090.2**
1700						17.947	20.222	12.433					**3092.0**
1701						17.959	20.235	12.444					**3093.8**
1702						17.970	20.249	12.456					**3095.6**
1703						17.982	20.262	12.468					**3097.4**
1704						17.993	20.275	12.479					**3099.2**
1705						18.004	20.289	12.491					**3101.0**
1706						18.016	20.302	12.503					**3102.8**
1707						18.027	20.316	12.514					**3104.6**
1708						18.039	20.329	12.526					**3106.4**
1709						18.050	20.342	12.538					**3108.2**
1710						18.061	20.356	12.549					**3110.0**
1711						18.073	20.369	12.561					**3111.8**
1712						18.084	20.382	12.572					**3113.6**
1713						18.095	20.396	12.584					**3115.4**
1714						18.107	20.409	12.596					**3117.2**
1715						18.118	20.422	12.607					**3119.0**
1716						18.129	20.436	12.619					**3120.8**
1717						18.140	20.449	12.631					**3122.6**
1718						18.152	20.462	12.642					**3124.4**
1719						18.163	20.475	12.654					**3126.2**
1720						18.174	20.488	12.666					**3128.0**
1721						18.185	20.502	12.677					**3129.8**
1722						18.196	20.515	12.689					**3131.6**
1723						18.208	20.528	12.701					**3133.4**
1724						18.219	20.541	12.712					**3135.2**
1725						18.230	20.554	12.724					**3137.0**
1726						18.241	20.567	12.736					**3138.8**
1727						18.252	20.581	12.747					**3140.6**
1728						18.263	20.594	12.759					**3142.4**
1729						18.274	20.607	12.770					**3144.2**
1730						18.285	20.620	12.782					**3146.0**

°C t90	Type T Cu-CuNi mV	Type E NiCr-CuNi mV	Type J Fe-CuNi mV	Type K NiCr-Ni mV	Type N NiCrSi-NiSi mV	Type S Pt10Rh-Pt mV	Type R Pt13Rh-Pt mV	Type B Pt30Rh-Pt6Rh mV	Type U Cu-CuNi mV	Type L Fe-CuNi mV	Pt100 Ω	Ni100 Ω	°F t90
1731						18.297	20.633	12.794					**3147.8**
1732						18.308	20.646	12.805					**3149.6**
1733						18.319	20.659	12.817					**3151.4**
1734						18.330	20.672	12.829					**3153.2**
1735						18.341	20.685	12.840					**3155.0**
1736						18.352	20.698	12.852					**3156.8**
1737						18.362	20.711	12.863					**3158.6**
1738						18.373	20.724	12.875					**3160.4**
1739						18.384	20.736	12.887					**3162.2**
1740						18.395	20.749	12.898					**3164.0**
1741						18.406	20.762	12.910					**3165.8**
1742						18.417	20.775	12.921					**3167.6**
1743						18.428	20.788	12.933					**3169.4**
1744						18.439	20.801	12.945					**3171.2**
1745						18.449	20.813	12.956					**3173.0**
1746						18.460	20.826	12.968					**3174.8**
1747						18.471	20.839	12.980					**3176.6**
1748						18.482	20.852	12.991					**3178.4**
1749						18.493	20.864	13.003					**3180.2**
1750						18.503	20.877	13.014					**3182.0**
1751						18.514	20.890	13.026					**3183.8**
1752						18.525	20.902	13.037					**3185.6**
1753						18.535	20.915	13.049					**3187.4**
1754						18.546	20.928	13.061					**3189.2**
1755						18.557	20.940	13.072					**3191.0**
1756						18.567	20.953	13.084					**3192.8**
1757						18.578	20.965	13.095					**3194.6**
1758						18.588	20.978	13.107					**3196.4**
1759						18.599	20.990	13.119					**3198.2**
1760						18.609	21.003	13.130					**3200.0**
1761						18.620	21.015	13.142					**3201.8**
1762						18.630	21.027	13.153					**3203.6**
1763						18.641	21.040	13.165					**3205.4**
1764						18.651	21.052	13.176					**3207.2**
1765						18.661	21.065	13.188					**3209.0**
1766						18.672	21.077	13.200					**3210.8**
1767						18.682	21.089	13.211					**3212.6**
1768						18.693	21.101	13.223					**3214.4**
1769								13.234					**3216.2**
1770								13.246					**3218.0**
1771								13.257					**3219.8**
1772								13.269					**3221.6**
1773								13.280					**3223.4**
1774								13.292					**3225.2**
1775								13.304					**3227.0**
1776								13.315					**3228.8**
1777								13.327					**3230.6**
1778								13.338					**3232.4**
1779								13.350					**3234.2**
1780								13.361					**3236.0**

°C t90	Type T Cu-CuNi mV	Type E NiCr-CuNi mV	Type J Fe-CuNi mV	Type K NiCr-Ni mV	Type N NiCrSi-NiSi mV	Type S Pt10Rh-Pt mV	Type R Pt13Rh-Pt mV	Type B Pt30Rh-Pt6Rh mV	Type U Cu-CuNi mV	Type L Fe-CuNi mV	Pt100 Ω	Ni100 Ω	°F t90
1781								13.373					**3237.8**
1782								13.384					**3239.6**
1783								13.396					**3241.4**
1784								13.407					**3243.2**
1785								13.419					**3245.0**
1786								13.430					**3246.8**
1787								13.442					**3248.6**
1788								13.453					**3250.4**
1789								13.465					**3252.2**
1790								13.476					**3254.0**
1791								13.488					**3255.8**
1792								13.499					**3257.6**
1793								13.511					**3259.4**
1794								13.522					**3261.2**
1795								13.534					**3263.0**
1796								13.545					**3264.8**
1797								13.557					**3266.6**
1798								13.568					**3268.4**
1799								13.580					**3270.2**
1800								13.591					**3272.0**
1801								13.603					**3273.8**
1802								13.614					**3275.6**
1803								13.626					**3277.4**
1804								13.637					**3279.2**
1805								13.649					**3281.0**
1806								13.660					**3282.8**
1807								13.672					**3284.6**
1808								13.683					**3286.4**
1809								13.694					**3288.2**
1810								13.706					**3290.0**
1811								13.717					**3291.8**
1812								13.729					**3293.6**
1813								13.740					**3295.4**
1814								13.752					**3297.2**
1815								13.763					**3299.0**
1816								13.775					**3300.8**
1817								13.786					**3302.6**
1818								13.797					**3304.4**
1819								13.809					**3306.2**
1820								13.820					**3308.0**

The most important methods for measuring temperature and their basic principles are described.

Numerous practical details provide the user with valuable information about temperature measurement in industrial applications.

03/TEMP-EN Rev. E 09.2017