A-PLUS Water LLC.

Eliminator Pro Series Service Manual

Aplus Water LLC
phone: 1-877-477-5452 - www.APLUSWATER.net

Contents

Installation Instructions

Water Pressure: A minimum of 20 psi inlet water pressure is required for effective regeneration.

Electrical Facilities: An uninterrupted alternating current (AC) supply is required. Please make sure your voltage supply is compatible with your unit before installation.

Existing Plumbing: Condition of existing plumbing should be free from lime and iron buildup. Piping that has heavy buildup with lime and/or iron should be replaced. If piping is clogged with iron, a separate iron filter unit should be installed ahead of the water softener.

Location of Softener and Drain: The softener should be located close to a clean working drain and connected according to local plumbing codes.

Bypass Valves: Always provide for the installation of a bypass valve if unit is not equipped with one.

⚠	Water pressure is not to exceed 120 psi, water temperature is not to exceed 110°F, and the unit cannot be subjected to freezing conditions.

Installation Instructions

1. Place the softener tank where you want to install the unit, making sure the tank is level and on a firm base.
2. All plumbing should be done in accordance with local plumbing codes. The pipe size for the drain line should be a minimum of ½". Backwash flow rates in excess of 7gpm or length in excess of 20' require ¾" drain line.
3. The 1" distributor tube (1.05 O.D) should be cut flush with top of tank.
4. **Pre-lubricate the distributor o-ring seal and tank o-ring seal. Twist the valve on to the tank. If applicable, pre-lubricate the plastic bypass o-ring seals and inside the plastic yoke before attaching to valve. Silicone lubricant is the only lubrication recommended.**
5. Solder joints near the drain must be done prior to connecting the Drain Line Flow Control fitting (DLFC). Leave at least 6" between the DLFC and solder joints when soldering pipes that are connected on the DLFC. Failure to do this could cause interior damage to the DLFC.
6. Teflon tape is the only sealant to be used on the drain fitting.
7. Make sure that the floor is clean beneath the salt storage tank and that it is level.
8. On units with a bypass, place in bypass position. Turn on the main water supply. Open a cold soft water tap nearby and let run a few minutes or until the system is free from foreign material that may have resulted from the installation. Once clean, close the water tap.
9. Place the bypass in service position and let water flow into mineral tank. When water flow stops, slowly open a cold water tap nearby and let run until the air is purged from the unit.
10. Plug unit into an electrical outlet.
    Note: All electrical connections must be connected according to local codes.
11. Add 7 inches of water to brine tank to cover air check on float. Manually step the valve to the Brine Draw position and allow the valve to draw water from the brine tank until it stops.
    Note: The air check will check at approximately the midpoint of the screened intake area.
12. Next, manually step the valve to the Brine Refill position and allow the valve to return to Service automatically.
13. With the valve in Service, check that there is about 1.0" of water above the grid in the brine tank, if used.
14. Fill the brine tank with salt.
15. Set-up is now finished; the control can now be left to run automatically.

In Service Display

Timed Regeneration Mode:
The display will show the current time, day of the week, and remaining time until the next set regeneration.

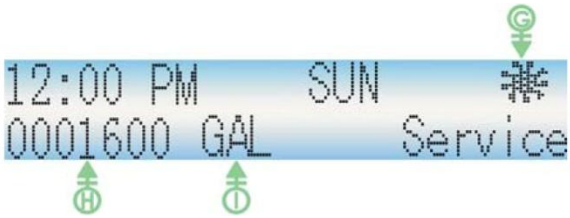

Meter Immediate Regeneration Mode:
The display will show the current time, day of the week, and amount of treated water remaining until next regeneration.

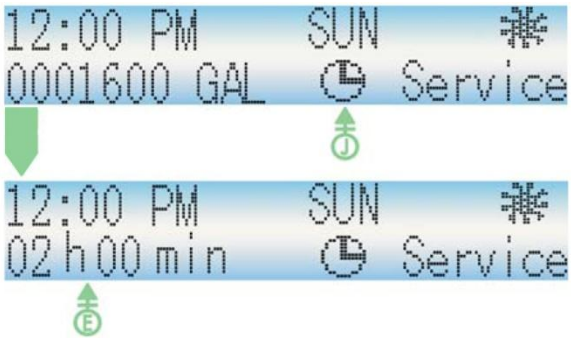

Meter Delay Regeneration Mode:
The display will show the current time, day of the week, and amount of remaining treated water. At zero the display changes to the regeneration time set by the user.

Weekly Regeneration Mode:
The display will show the current time, day of the week, and the remaining time until the next set regeneration.

- A Current Time-Hours
- B Current Time-Minutes
- C AM/PM
- D Day of the Week
- E Time Remaining Until Next Regeneration
- F Valve Stage
- G Meter Icon-Rotates When Meter is Operational
- H Remaining Amount of Treated Water Left Prior to Regeneration
- I Volume Unit
- J Meter Delay Activated Icon
- K Day of Week for Next Regeneration

Automatic Keypad Lock

If the keypad is not used for 3 minutes, the keyboard will be locked. To release, press any key to illuminate the screen, then press the button and then the button.

Memory During Power Failure

- All program settings are stored in permanent memory. Current valve position, cycle step elapsed, and time of day are stored during a power failure. Reset of current time is necessary when powering up.
- If the valve stopped at a regeneration stage during a power outage. The valve will begin at the prior position before the outage occurred. It takes 4-5 minutes to reset to the position.

Restore Factory Settings

Press and hold the Manual Regen. button. The following screen displays.

Release the Manual Regen. button. The valve has restored the factory default settings.

Fault Alarm

The system will automatically detect errors. If an error is found the following screen displays.

In this state, please cut off the power supply and then re-apply the power. If the errors are removed the valve will either stop in service position or reset. If conditions persist, contact your local supplier for more assistance.

No Hard Water Bypass

The D-Series valves are designed with the option of a no hard water bypass piston, which ensures no hard water out of the outlet in the process of regeneration.

Manual Regeneration

- Queuing a Regeneration
  - The system will initiate regeneration at the time set that same day. If set time has passed, the system will initiate regeneration that same time the next day.
  - When the valve is in service position press the “Manual Regen” button. The “Que Reg” icon will flash indicating regeneration has been queued. To cancel the queued regeneration press the “manual Regen” button again.

In the mode of **TIME** or **WEEK**, the display shows for the queued regeneration.

- A Current Time-Hours
- B Current Time-Minutes
- C AM/PM
- D Day of the Week
- E Time Remaining Until Next Regeneration
- F Icon of Queuing Regeneration
- G Valve Working Status

In the mode of **METER DELAY**, the display shows the queue for regeneration.

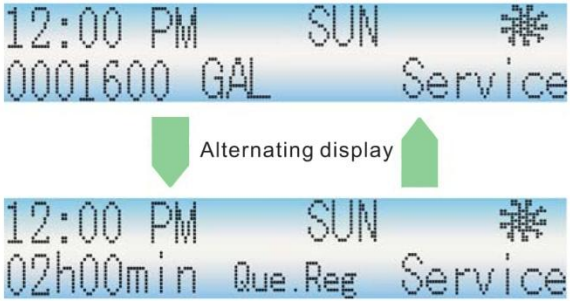

In the mode of **METER IMMEDIATE**, the display shows the queue for regeneration. The system will initiate a regeneration either the treated water remaining counts down to zero or the remaining time counts down to zero, whichever is first.

- Regenerating Immediately
  - When the valve is in service position press and hold the Manual Regen. button for 5 seconds. The valve immediately advances to the stage of regeneration.

Key Pad Functions

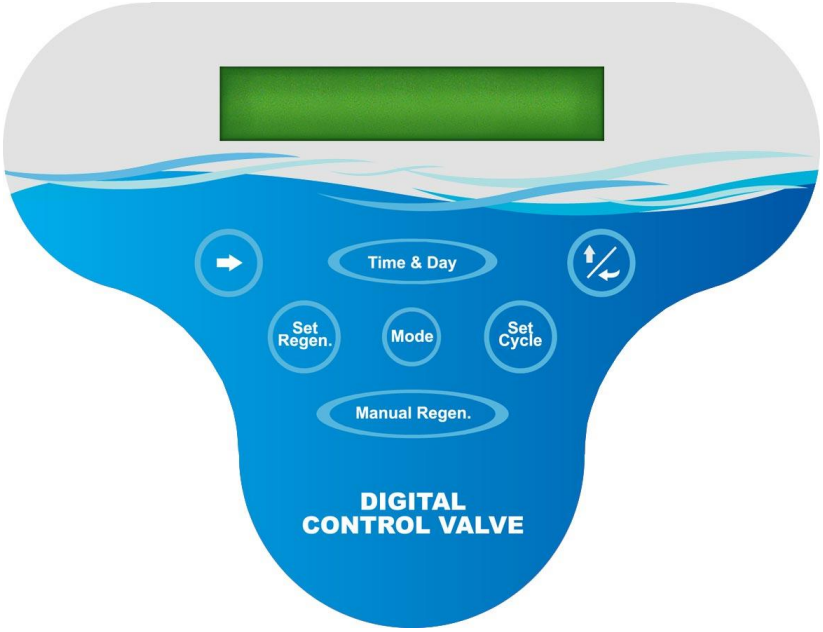

“Right Arrow” button moves the cursor to parameters for change.

“Up Arrow” button increases the value of the selected parameters or confirm the selected parameters.

“Time & Day” button sets the current time and day.

“Mode” button selects the valve regeneration type. There are 4 mode regeneration options: Timer, Meter Immediate, Meter Delayed, and Week Day initiated regenerations.

“Set Regen” button sets the appropriate requirements such as the regeneration time and water capacity for the specific mode selected.

“Set Cycle” button sets the duration of Backwash, Brine Draw, Rapid Rinse, and Brine Refill.

“Manual Regen” button manually initiates an immediate regeneration or a queued regeneration.

Distributor Information Programming Guide

Mode — Press and hold the "Mode" button while simultaneously powering up the valve.

Company & Telephone
Edit OFF

Edit: Editing and input information
OFF: Exit

Move & Select

Confirm

Input distributor name and telephone number or email address.
Total 2 lines

Move the cursor right to desired position.

Move cursor left to desired position.

Manual Regen. — Delete character and move to next position.

Time & Day

ABCDEFGHIJKLMNOPQRST
UVWXYZ 0123456789-.&@

Move the cursor right to desired capital letter.

Confirm choice.

Manual Regen. — Move the cursor up or down a line.

Time & Day

abcdefghij klmnopqrst
uvwxyz 0123456789-.&@

Move the cursor right to desired lower case letter.

Confirm choice.

Manual Regen. — Move the cursor up or down a line.

Mode — Save and exit setup. If no key is pressed, the screen will time out after 10 minutes. Changes will not be saved and display will return to service screen.

- Once saved this information will display alternating with the "In Service" information.
- Press and hold the button for 5 seconds to display the distributor information for 10 seconds.

Time & Day (Example: **2:30AM WED**)

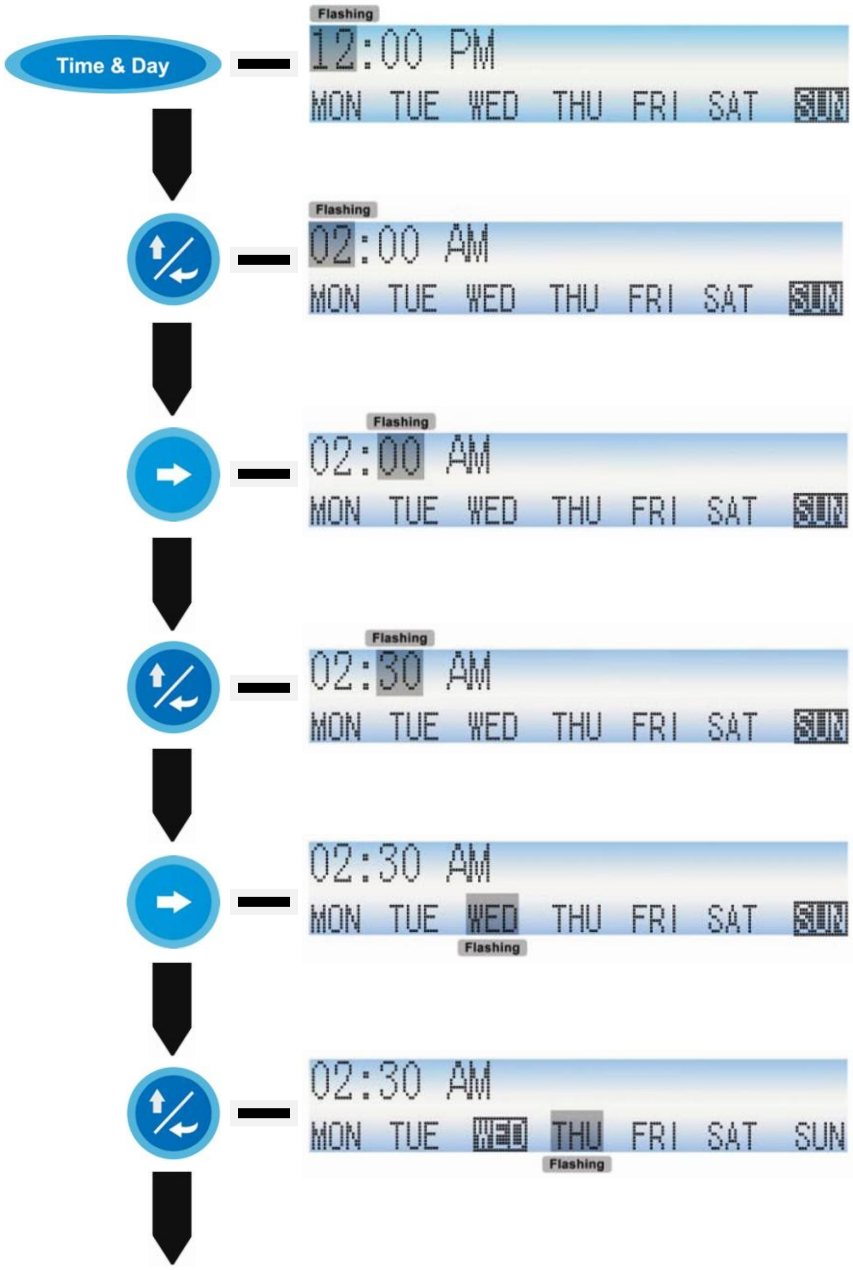

Default Setting

Increase hour number to “02”.
AM and PM change automatically according to the hours changing.

Move cursor to minute number.

Increase minute number to “30”.

Move cursor to desired day of week.

Confirm. Cursor will automatically move to next position.

Time & Day

Save and Exit. If this button is not pressed within 5 minutes, changes will not be saved and the display will return to service screen.

- **Mode** (Example: Regeneration Type=**Meter Imm** Unit=**M^3**)

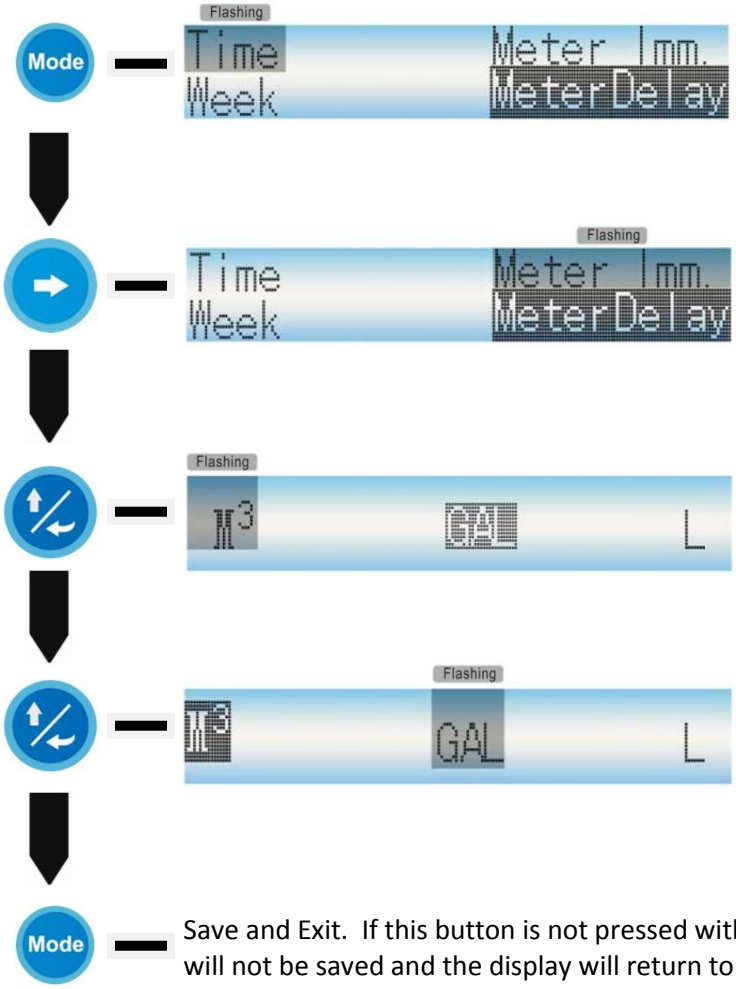

Set Regen-Time Mode (Example: Time=**02:30 AM** Day Override=**05**)

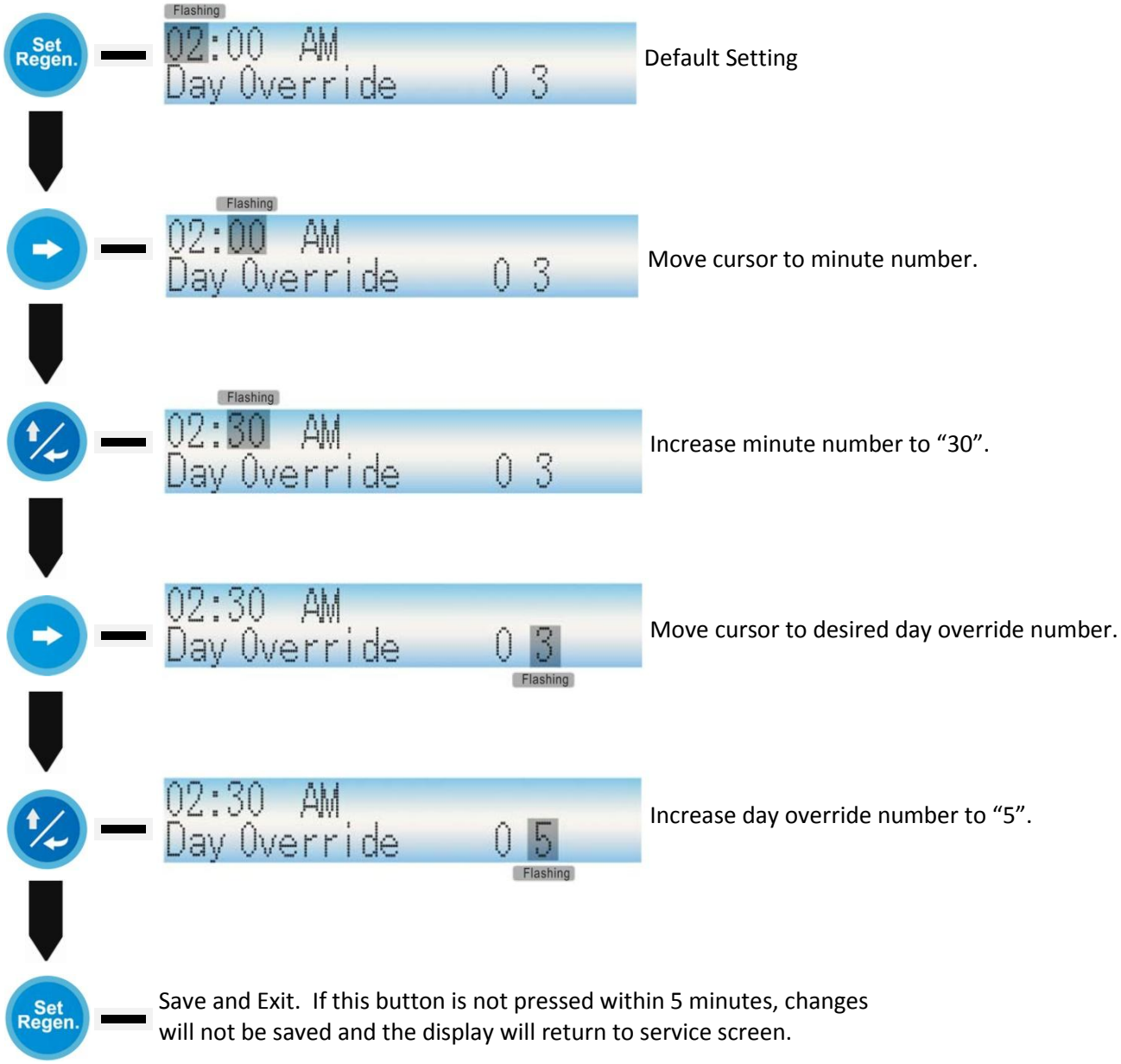

Set Regen-Meter Imm Mode (Example: Capacity=**0002000 GAL**)

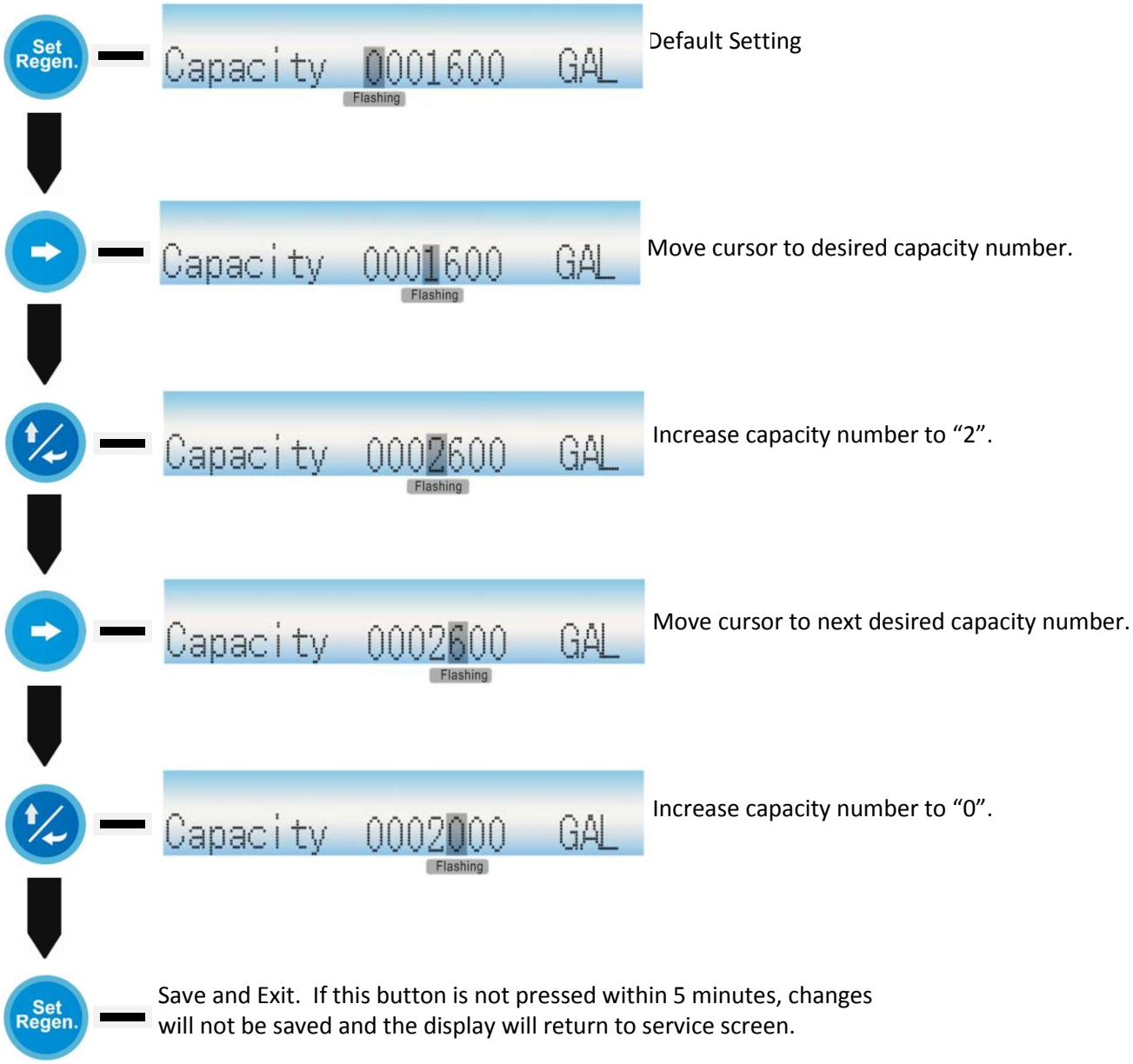

Set Regen-Week Mode (Example: **02:00 AM FRI SUN**)

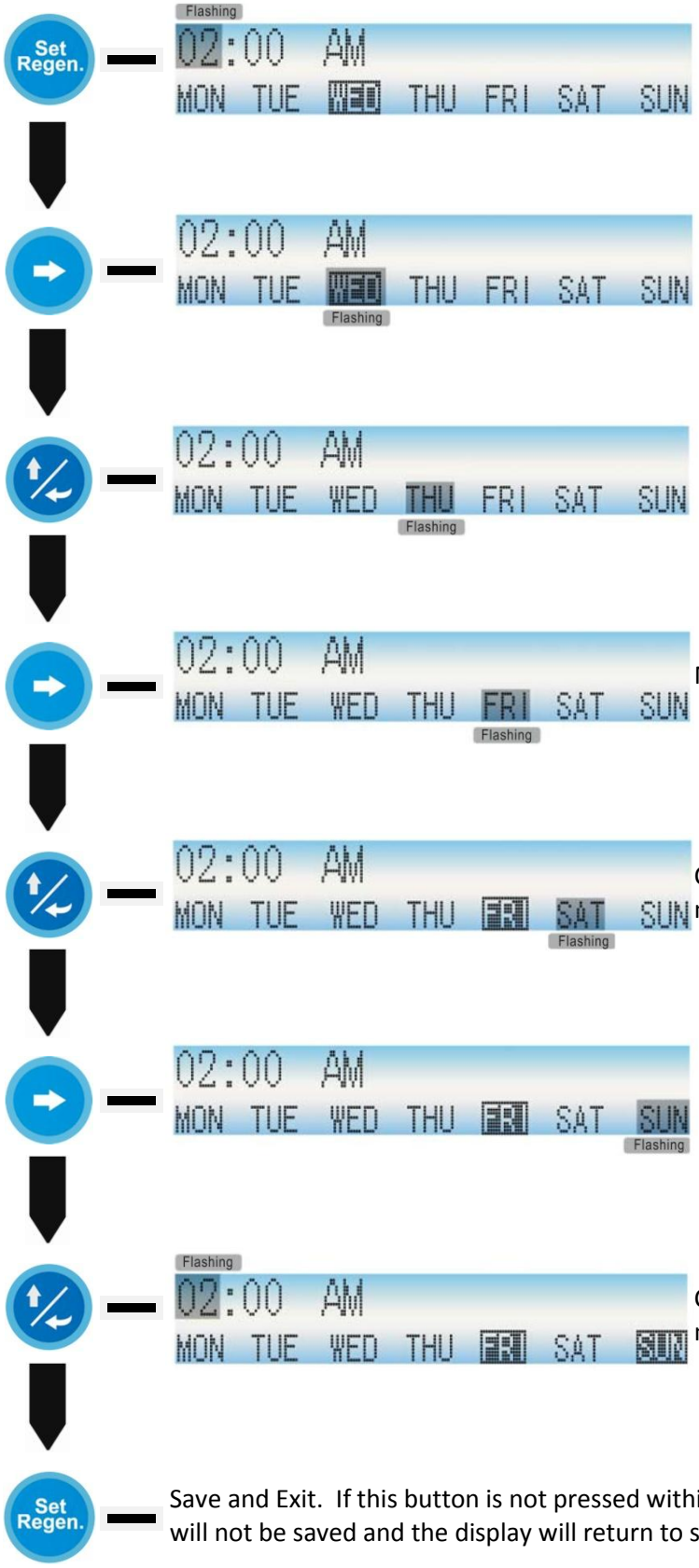

Set Regen-Meter Delay Mode

Flashing

02:00 AM
Capacity 0001600 GAL

Default Setting

Use mode of **"Time"** and **"Meter Imm"** to set.

Save and Exit. If this button is not pressed within 5 minutes, changes will not be saved and the display will return to service screen.

Set Cycle

Flashing

BackWas.015 BrineDr.060
RapidRs.010 ReFill 012

Default Setting
"BackWash" and "RapidRs" cannot be set to "000".

Move cursor to desired number.

Increase to desired number.

Save and Exit. If this button is not pressed within 5 minutes, changes will not be saved and the display will return to service screen.

Dimensional Drawing

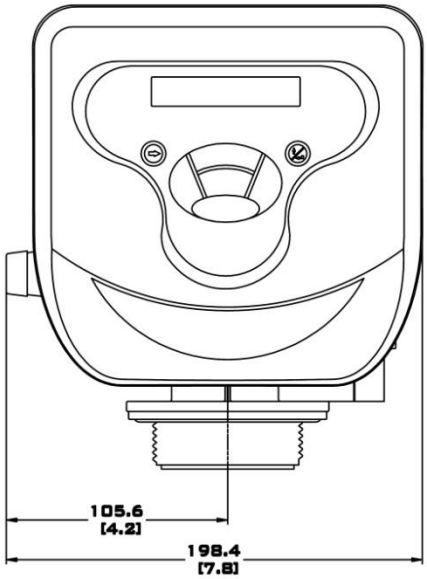

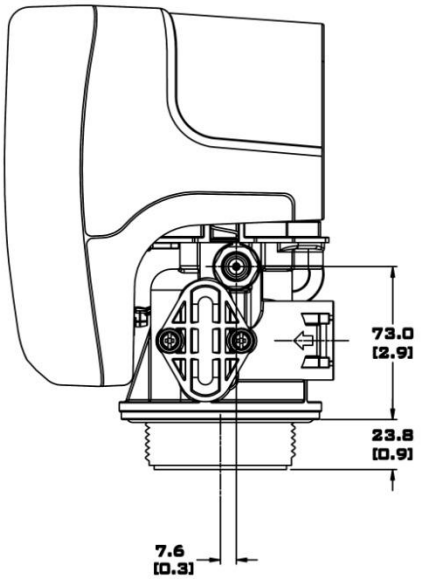

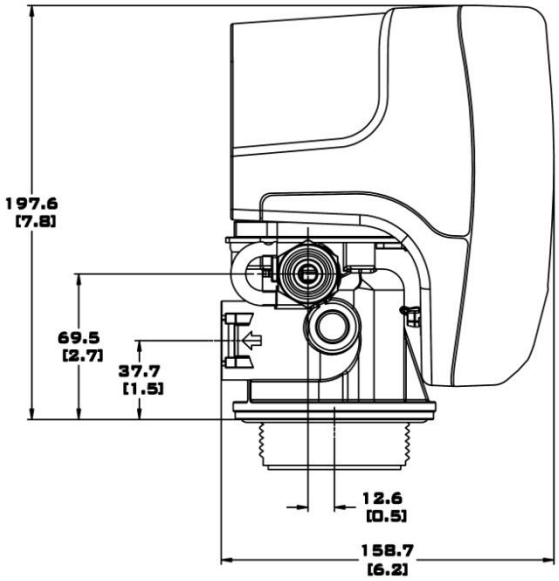

D-STC & D-SMM Valve Assembly

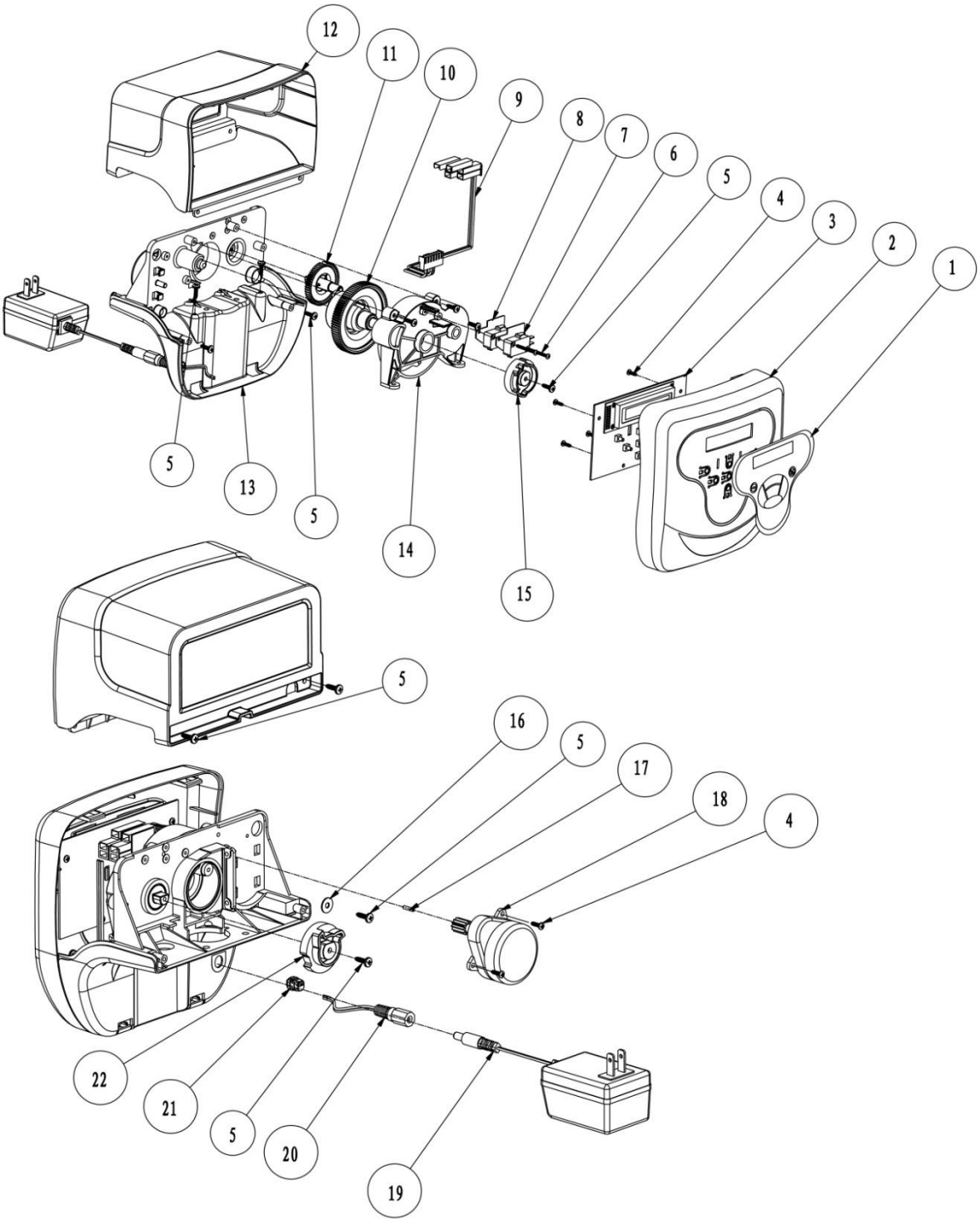

Item No.	Quantity	Part No.	Description
1	1	50090	Keypad Label
2	1	50014	Front Cover
3	1	07031	Circuit Board; Timer
4	6	02110	Screw
5	12	02106	Screw
6	2	02081	Screw
7	2	06003	Switch; Micro
8	2	06051	Insulator
9	1	C0001	Wire Set
10	1	50015	Main Gear
11	1	50016	Brine Gear
12	1	50023	Top Cover
13	1	50013	Bracket
14	1	50024	Gear Cover
15	1	50018	Main Cam
	1	50028	Main Cam; Filter
16	1	04002	Washer
17	1	00105	Pin
18	1	13265	Motor
19	1	07030	Transformer
20	1	07021	DC Socket
21	1	07091	Wiring Fastener
22	1	50017	Brine Cam; NHW
	1	50027	Brine Cam

D-FTC Valve Body Assembly

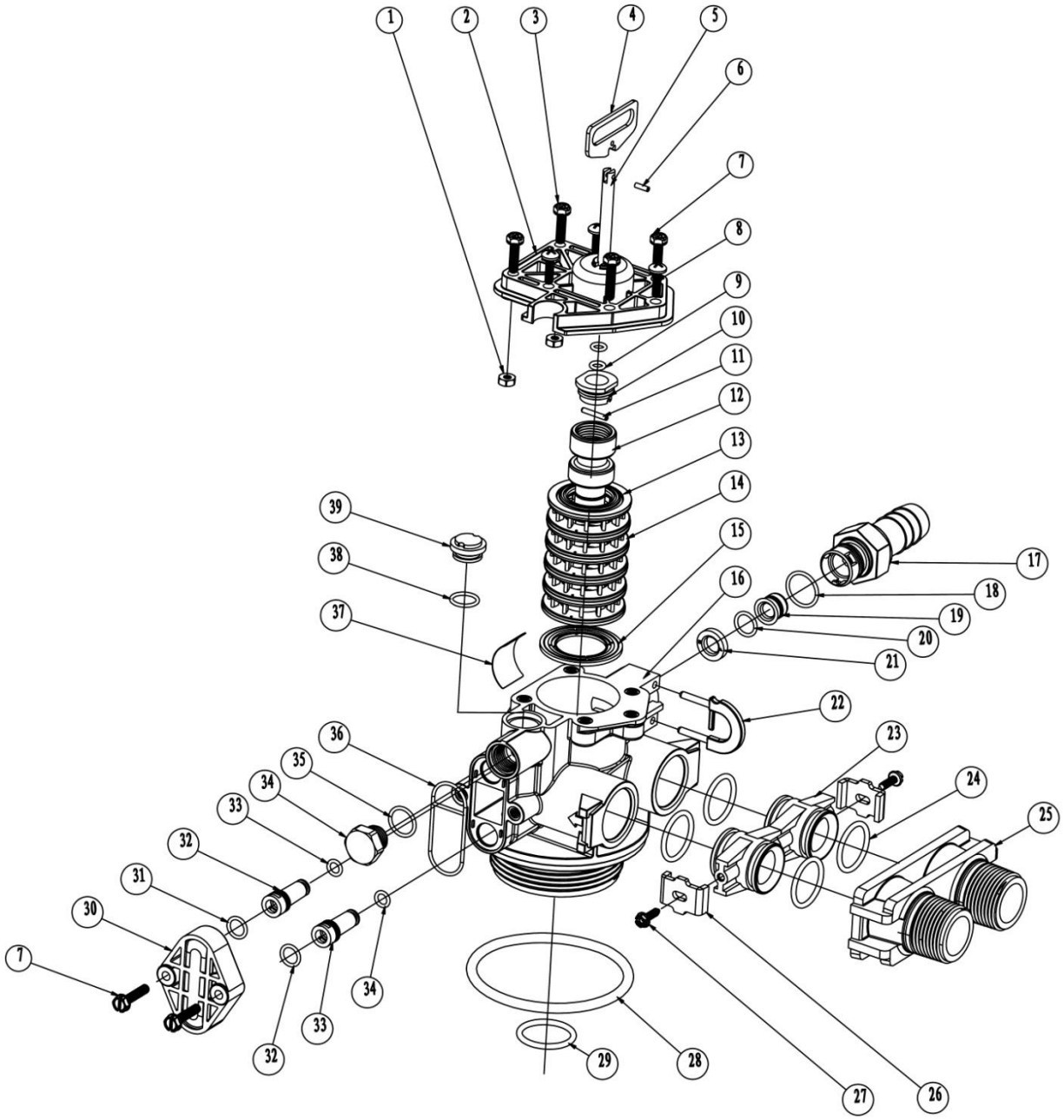

D-FTC Valve Body Assembly Continued

Item No.	Quantity	Part No.	Description
1	2	03002	Nut
2	1	50007	End Plug Retainer
3	2	02011	Screw
4	1	50043	Piston Joint Piece
5	1	50046-1	Piston Rod; Filter
6	1	00106	Piston Pin
7	4	02012	Screw
8	3	02001	Screw
9	2	01001	O-Ring
10	1	56006	Piston Rod Retainer
11	1	00101	Piston Pin
12	1	50045-1	Piston; Filter
13	6	56033	Seal
14	5	56004	Spacer
15	1	50008	Spacer; Gasket
16	1	50009	Valve Body Assembly
17	1	50010	Drain Hose Barb
18	1	01019	O-Ring
19	1	50025	DLFC Button Retainer
20	1	01006	O-Ring
21	1	56055	DLFC (15 GPM)
	1	56045	DLFC (12 GPM)
	1	56046	DLFC (9.0 GPM)
	1	56032	DLFC (7.0 GPM)
22	1	50011	DLFC Buckle
23	2	56017	Adaptor Coupling
24	4	01013	O-Ring
25	1	56019	1” Yoke; Plastic
	1	56018	¾” Yoke; Plastic
	1	56208	1 ¾” Yoke; Plastic
26	2	56051	Adaptor Clip
27	2	02105	Screw
28	1	01007	O-Ring
29	1	01102	O-Ring
30	1	50001	BLFC Top
31	2	01018	O-Ring
32	1	50006	Plug
33	2	01018	O-Ring
34	1	56102	Plug
35	1	01004	O-Ring
36	1	50060	O-Ring
37	1	56080	DLFC Label
38	1	01003	O-Ring
39	1	56101	Plug

D-STC & D-SMM Valve Body Assembly

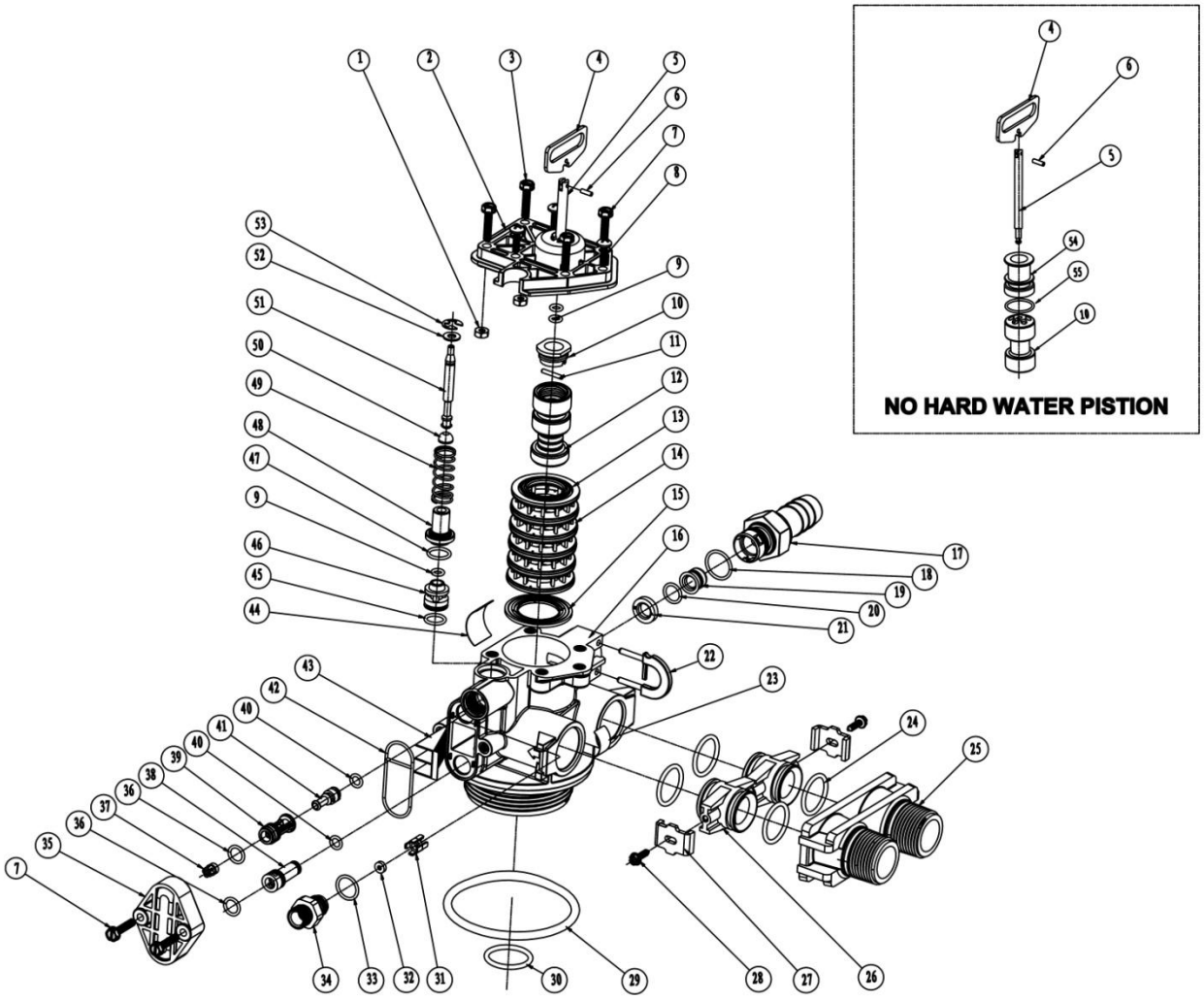

D-STC & D-SMM Valve Body Assembly Continued

Item No.	Quantity	Part No.	Description
1	2	03002	Nut
2	1	50007	End Plug Retainer
3	6	02011	Screw
4	1	50043	Piston Joint Piece
5	1	50046-1	Piston Rod; Filter
	2	50042-1	Piston Rod; Softener
6	1	00106	Piston Pin
7	4	02012	Screw
8	3	02001	Screw
9	3	01001	O-Ring
10	1	56006	Retainer; Piston Rod
11	1	00101	Piston Pin
12	1	50045-1	Piston; Filter
	1	50040-1	Piston; Softener
13	6	56033	Seal
14	5	56004	Spacer
15	1	50008	Spacer; End
16	1	50009	Valve Body Assembly
17	1	50010	Drain Hose Barb
18	1	01019	O-Ring
19	1	50025	DLFC Button Retainer
20	1	01006	O-Ring
21	1	56044	DLFC (15 GPM)
	1	56045	DLFC (12 GPM)
	1	56046	DLFC (9.0 GPM)
	1	56032	DLFC (7.0 GPM)
22	1	50011	Retainer; Drain
23	1	56081	BLFC Label
24	4	01013	O-Ring
25	1	56019	1” Yoke; Plastic
	1	56018	¾” Yoke; Plastic
	1	56208	1 ¾” Yoke; Plastic
26	2	56017	Adaptor Coupling
27	2	56051	Clip; Mounting
28	2	02103	Screw
29	1	01007	O-Ring
30	1	01102	O-Ring
31	1	56015	Retainer; BLFC Button
32	1	56031	BLFC (1.0 GPM)
	1	56042	BLFC (0.25 GPM)
	1	56034	BLFC (0.50 GPM)
33	1	01004	O-Ring
34	1	56056	BLFC Fitting
35	1	50001	Cap; Injector
36	2	01018	O-Ring
37	1	50004	Vortex Generator
38	1	50006	Plug; Injector

Item No.	Quantity	Part No.	Description
39	1	50003	Injector Nozzle (#4)
	1	50030	Injector Nozzle (#0)
	1	50032	Injector Nozzle (#1)
	1	50034	Injector Nozzle (#2)
	1	50036	Injector Nozzle (#3)
40	2	01017	O-Ring
41	1	50002	Injector Throat (#4)
	1	50029	Injector Throat (#0)
	1	50031	Injector Throat (#1)
	1	50033	Injector Throat (#2)
	1	50035	Injector Throat (#3)
42	1	50060	O-Ring
43	1	50005	Screen Injector
44	1	56080	DLFC Label
45	1	01105	O-Ring
46	1	56010	Brine Valve Spacer
47	1	01003	O-Ring
48	1	56007	Brine Valve Cap
49	1	56058	Spring; Brine Valve
50	1	56030	Brine Valve Seat
51	1	56054-1	Brine Valve Stem
52	1	04001	Washer; Brine Valve
53	1	04053	Retaining Ring
54	1	50041-1	Bypass Piston
55	1	01021	O-Ring

D-SMM Meter Assembly

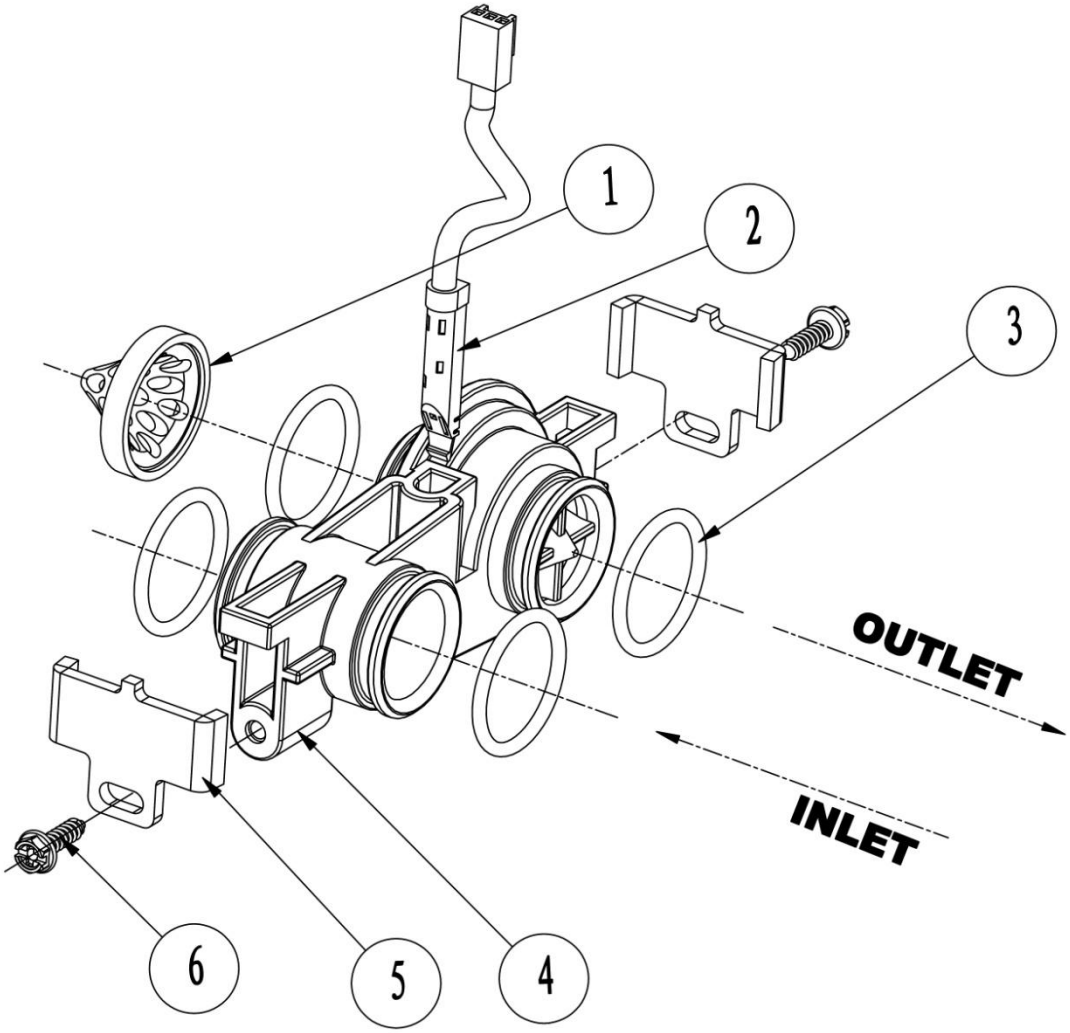

Item No.	Quantity	Part No.	Description
1	1	56013	Flow Straightener
2	1	50022-1	Meter Cable Assembly
3	4	01013	O-Ring; Meter Body
4	1	1220E	Meter Assembly
5	2	50044	Adaptor Clip
6	2	02105	Screw; Adaptor Clip

D-STC & D-SMM Wiring Diagram

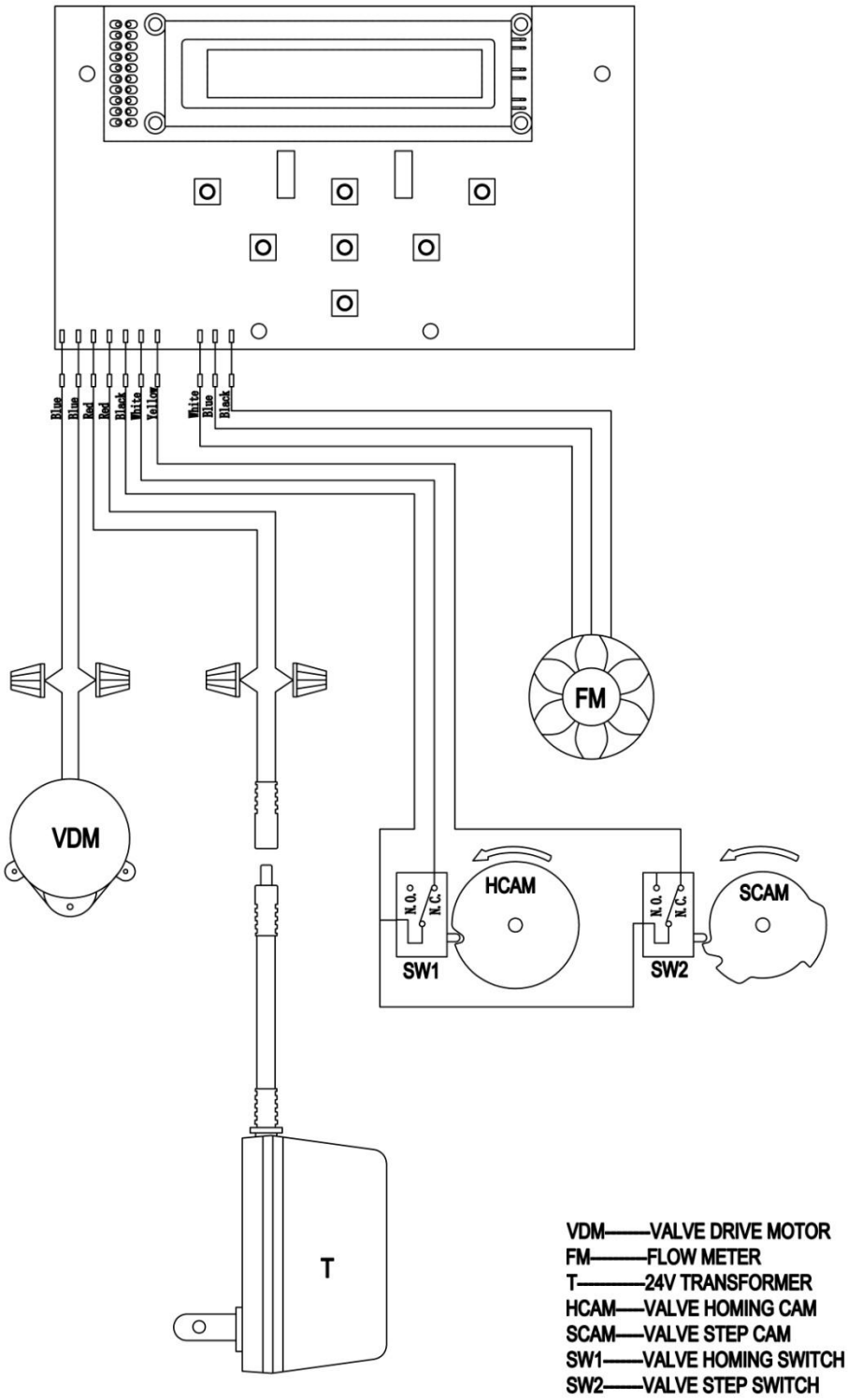

Troubleshooting

Symptom	Probable Cause	Correction
1. Softener Fails to regenerate automatically.	A. Cord plugged into intermittent or dead power source. B. Disconnected meter cable. C. Defective power cord. D. Defective timer, meter, or sensor.	A. Connect to constant power source B. Reconnect cable. C. Replace cord D. Replace or repair.
2. Regenerating at wrong time.	A. Timer improperly set due to power failure.	A. Reset timer.
3. Loss of capacity.	A. Increased raw water hardness. B. Brine concentration and/or quality. C. Contaminated resin D. Poor distribution, Channeling (uneven bed surface) E. Interval valve leak. F. Resin age. G. Resin loss	A. Reset unit to the new capacity. B. Keep brine tank full of salt. Clean brine tank yearly. Salt may be bridged. If using a salt grid plate, ensure refill water is in contact. C. Call dealer, find out how to confirm it, clean resin, and prevent future fouling. D. Call dealer. Check distributors and backwash flow. E. Call dealer. Replace spacers, seals, and/or piston. F. Call dealer. Check for resin oxidation caused by chlorine. or mushy resin. G. Call dealer. Check for correct bed path, broken distributors, air or gas in bed, well gas eliminator, or loose brine line.
4. Poor water quality.	A. Check items in #3. B. Bypass valve open. C. Channeling.	A. Check items in #3. B. Close bypass valve. C. Check for too slow or high service flow. Check for media fouling.
5. High salt usage.	A. High salt setting. B. Excessive water in brine tank.	A. Adjust salt setting. B. See symptom #7.
6. Loss of water pressure.	A. Scaling/buildup of inlet pipe. B. Contaminated resin C. Improper backwash.	A. Clean or replace pipeline. Pretreat to prevent. B. Clean the resin. Pretreat to prevent. C. Too many resin fines and or sediment. Call dealer, reset backwash flow rate and/or adjust time.
7. Excessive water in brine tank and/or salty water to service.	A. Plugged drain line. B. Dirty or damaged brine valve. C. Plugged injector. D. Low inlet pressure. E. Timer not cycling.	A. Check flow to drain. Clean flow control. B. Clean or replace brine valve. C. Clean injector and replace screen. D. Increase pressure to allow injector to perform properly (20 psi minimum). E. Replace timer.
8. Softener fails to use salt.	A. Plugged/restricted drain line. B. Injector plugged. C. No water in brine tank. D. Water pressure is too low. E. Brine line injects air during brine draw. F. Internal control leak.	A. Clean drain line and/or flow control. B. Clean or replace injector or screen. C. Check for restriction in BLFC. Ensure safety float is not stuck. D. Line pressure must be at least 20 psi. E. Check brine line for air leaks. F. Call dealer. Check piston, seals, and spacers for scratches and dents.
9. Control cycles continuously.	A. Faulty timer.	A. Replace timer.
10. Continuous flow to drain.	A. Foreign material in control. B. Internal control leak. C. Valve jammed in brine or backwash position. D. Timer motor stopped or jammed.	A. Call dealer. Clean valve/rebuild unit. B. Same as above. C. Same as above. D. Replace timer motor.

Contact Information

Thank you again for choosing this control valve for water treatment systems. Please contact your service professional with questions.

Place contact information

here.