Features

- Intrinsically safe solenoid enclosures to provide corrosion resistance in harsh environments
- Designed solely for installation in intrinsically safe areas, with properly approved and sized current and voltage-limiting safety barriers
- Acceptable for use in hazardous locations, as classified by the National Electrical Code: Classes I, II, and III, Division 1, including Groups A through G
- Electronically enhanced solenoids have efficient cartridge operators and nonpolarized coils
- Triple redundant diodes prevent electrical pulse from flowing back into the hazardous area
- Mountable in any position

Solenoid Operators

WBIS: Watertight, Type 3, 3S, 4, 4X, IP-67. Liquid Crystal Polymer (LCP) overmolded with 1/2" NPT conduit connection and screw terminals for simple wiring. The terminal block will accommodate 18 gage (AWG) wire, and grounding screw is located inside the enclosure.

ISSC: DIN 43650/ISO 4400, IP-65 Epoxy overmolded with Din Connector supplied, suitable to accept wiring cable diameters of 0.310 to 0.400 inches.

Solenoid Construction

Gasket Cover	NBR
Cover Screw	18-8 Stainless Steel
Cover Screw Gasket	NBR
Sleeve	430F Stainless Steel
Nameplate	Stainless Steel
Burp Cap Assembly	PA/CR

Valve Construction

Valve Parts in Contact with Fluids			
Body	Aluminum	Brass	Stainless Steel
Seals and Discs	PUR, NBR, FKM, CR, as listed		
Sleeve	304L Stainless Steel		
Core and Plugnut	430F Stainless Steel		
Core Springs	302 Stainless Steel		
Pilot Seat Cartridge (Series 8316 & 8344 only)	CA		
Rider Rings	PTFE		
Spring Retainer	CA		

Electrical

Nominal Wattage is 0.35 @ 24 VDC
Maximum Allowable "Off" State Current to the Valves must be less than 1 mA.

Electronically Enhanced "IS" Solenoid:
Maximum Capacitor Charge Time — 1 second
Minimum Time between Cycles — 1 second
Minimum Drop Current to Reset Electronic Coil — 2 mA
Nominal Temperature Rise at 24 VDC and 300 Ohms — 2˚C (36˚F)
Maximum Recommended Wire Run (#18 Wire) — 1.5 miles from barrier to valve

Important: Minimum series resistance of 200 ohms required in wiring circuit if a safety barrier is not used for non-"IS" system.

IS_ValvesR5

Ordering Information

The LCP Intrinsically Safe solenoid enclosure is designatedby the prefix "WBIS". The Epoxy Din Connector is ordered by prefix "ISSC".

Example: **WBIS**8314A300 **Spare Coil P/Ns**
ISSC8314A300 WBIS: 274445-001*
ISSC: 268976-001*

Nominal Ambient Temp. Ranges

Series	Body Material	Temperature Range
8551/8553	**Aluminum**	5˚F to 140˚F (-15˚C to 60˚C)
8262	**Brass & Stainless Steel**	-40˚F to 140˚F (-40˚C to 60˚C)
8314		
8317		
8551		
8551/8553	**Stainless Steel**	
8316 Suffix V	**Misc.**	32˚F to 140˚F (0˚C to 60˚C)
All Other		-4˚F to 140˚F (-20˚C to 60˚C)

Approvals

FM approved under J.I.3W8A8. AX (3610).
CSA certified under File LR-13976.
ATEX Ex II1G Ex ia IIC T6 approved
IEC Ga Ex ia IIC T6 approved
Meets applicable CE directives.
Refer to Engineering Section for details.

Important

These solenoids are intended for use on clean, dry air or inert gas filtered to 50 micrometers or better. To prevent freezing, the dew point of the media should be at least 18˚F (-8˚C) below the minimum temperature to which any portion of the clean air or gas system could be exposed. Instrument air in compliance with ANSI/ISA Standard S7.3-1975 (R1981) exceeds the above requirements and is, therefore, an acceptable medium for these valves.

Maximum Entity Parameters

Entity	Groups A-D	Groups C-D
Parameters	V max - 30 VDC	V max - 34 VDC
	I max - 100 mA	I max - 125 mA
	Capacitance = 0	Capacitance = 0
	Inductance = 0	Inductance = 0

Standard Voltage: 24 VDC only (±10%)
Minimum Operating Current: 0.028 amps

ASCO®

Specifications (English units)

2/2 VALVES, NORMALLY CLOSED, with NBR Disc

Pipe Size (ins.)	Orifice Size (ins.)	Cv Flow Factor	Operating Pressure Differential (psi) Air-Inert Gas Min.	Max.	Max. Fluid and Ambient Temp. ˚F	Brass Body Catalog Number	Const. Ref.	Stainless Steel Body Catalog Number	Const. Ref.
1/4	1/16	.08	0	150	140	WBIS8262A320	1	WBIS8262A386	1A
3/8	5/16	1.5	10	150	140	WBIS8223A323	2	-	-
1/2	3/8	3.2	25	150	140	WBIS8223A303	3	WBIS8223A310	3

3/2 VALVES

Pipe Size (ins.)	Orifice Size (ins.)	Cv Flow Factor Pressure to Cylinder	Cylinder to Exhaust	Operating Pressure Differential (psi) Air-Inert Gas Min.	Max.	Max. Fluid and Ambient Temp. ˚F	Brass Body Catalog Number	Const. Ref.	Stainless Steel Body Catalog Number	Const. Ref.
UNIVERSAL OPERATION (Pressure at any port) with NBR Disc										
1/4	1/16	.08	.08	0	150	140	WBIS8314A300	4	WBIS8314A301	4A
NORMALLY CLOSED (Closed when de-energized)										
1/4	5/16	1.5	1.5	⑥	150	140	WBIS8316A301 ③	5	WBIS8316A381V ⑤	8
3/8	5/16	1.8	1.8	⑥	150	140	WBIS8316A302 ③	5	WBIS8316A382V ⑤	8
3/8	5/8	4	4	⑥	150	140	WBIS8316A303 ③	6	-	-
1/2	5/8	4	4	⑥	150	140	WBIS8316A304 ③	6	WBIS8316A384V ⑤	9
3/4	11/16	5.5	5.5	10	150	140	WBIS8316A374 ③	7	-	-
1	1	13	13	10	150	140	WBIS8316A334 ③	7A	-	-
UNIVERSAL OPERATION (Normally Closed or Normally Open) "Quick Exhaust" with CR Diaphragm and NBR Disc										
1/4	②	.08	.73	5	150	140	WBIS8317A307 ①	10	WBIS8317A308 ①	11
4/2 VALVES, with NBR Disc and Seal										
1/4	1/16	.08	.08	10	150	140	WBIS8345A301 ①③	12	WBIS8345A381 ①③	12
4/2 VALVES, Brass Body with NBR Disc							**Single Solenoid**	**Const. Ref.**	**Dual Solenoid**	**Const. Ref.**
1/4	1/4	.80	1	10	150	140	WBIS8344A370 ①③	13	WBIS8344A344 ③	16
3/8	3/8	1.4	2.2	10	150	140	WBIS8344A372 ①③	14	WBIS8344A380 ③	17
1/2	3/8	1.4	2.2	10	150	140	WBIS8344A374 ①③	14	WBIS8344A382 ③	17
3/4	3/4	5.2	5.6	10	150	140	WBIS8344A376 ①③	15	WBIS8344A354 ③	18
1	3/4	5.2	5.6	10	150	140	WBIS8344A378 ①③	15	WBIS8344A356 ③	18

① There are two exhaust flows in the exhaust mode (pilot and main). The pilot exhaust must be connected to the main exhaust when the air or inert gas can not be exhausted to the atmosphere.

② For "Quick Exhaust" valves, pressure port is 1/16", exhaust port is 1/4".

③ **IMPORTANT:** A minimum operating pressure differential must be maintained between the pressure and exhaust ports. Supply and exhaust piping must be full area, unrestricted. ASCO flow controls and other similar components must be installed in the cylinder lines only.

⑤ Diaphragm and main disc FKM only (pilot is low-temperature NBR).

⑥ Zero minimum when valve selection gasket is in external position and proper auxiliary air pressure is applied. See chart on page 146 for auxiliary pressure vs. mainline pressure. Minimum 15 psi Operating Pressure Differential when selection gasket is in the internal position.

Specifications (English units)

Body Material	Pipe Size (ins.)	Orifice Size (ins.)	Cv Flow Factor	Single Solenoid: Operating Pressure Differential (psi) Air-Inert Gas Min.	Single Solenoid: Operating Pressure Differential (psi) Air-Inert Gas Max.	Single Solenoid: Max. Fluid Temp.˚F	Single Solenoid: Catalog Number	Single Solenoid: Const. Ref.	Dual Solenoid: Operating Pressure Differential (psi) Air-Inert Gas Min.	Dual Solenoid: Operating Pressure Differential (psi) Air-Inert Gas Max.	Dual Solenoid: Max. Fluid Temp.˚F	Dual Solenoid: Catalog Number	Dual Solenoid: Const. Ref.
3/2, 5/2, 5/3 VALVES, with NBR and PUR Seals													
Aluminum 3/2	1/4	1/4	.86	30	150	140	WBIS8551A305	19	30	150	140	WBIS8551A306	19
Aluminum 5/2							WBIS8551A317	20				WBIS8551A318	20
Aluminum 5/3 Center Closed							-	-				WBIS8551A367	20
Aluminum 5/3 Center Open							-	-				WBIS8551A368	20
Brass 3/2							WBIS8551A307	19				WBIS8551A308	19
Brass 5/2							WBIS8551A319	20				WBIS8551A320	20
316L Stainless Steel 3/2							WBIS8551A313 ②	19				WBIS8551A314 ②	19
316L Stainless Steel 5/2							WBIS8551A321 ②	20				WBIS8551A322 ②	20
Aluminum 3/2	1/2	1/2	3.7				WBIS8553A305	19				WBIS8553A306	19
Aluminum 5/2							WBIS8553A317	20				WBIS8553A318	20
316L Stainless Steel 3/2							WBIS8553A313 ②	19				WBIS8553A314 ②	19
316L Stainless Steel 5/2							WBIS8553A321 ②	20				WBIS8553A322 ②	20

Body Material	Pipe Size (ins.)	Orifice Size (ins.)	Cv Flow Factor	Single Solenoid: Operating Pressure Differential (psi) Air-Inert Gas Min.	Single Solenoid: Operating Pressure Differential (psi) Air-Inert Gas Max.	Single Solenoid: Max. Fluid Temp.˚F	Single Solenoid: Catalog Number	Single Solenoid: Const. Ref.	Dual Solenoid: Operating Pressure Differential (psi) Air-Inert Gas Min.	Dual Solenoid: Operating Pressure Differential (psi) Air-Inert Gas Max.	Dual Solenoid: Max. Fluid Temp.˚F	Dual Solenoid: Catalog Number	Dual Solenoid: Const. Ref.
3/2, 5/2, 5/3 VALVES, with NBR and PUR Seals, NAMUR Mount													
Aluminum 3/2, 5/2	1/4	1/4	.86	30	150	140	WBIS8551A301 ①	21	30	150	140	WBIS8551A302 ①	21
Aluminum 5/3 Center Closed							-	-				WBIS8551A365	22
Aluminum 5/3 Center Open							-	-				WBIS8551A366	22
Brass 3/2, 5/2							WBIS8551A303 ①	21				WBIS8551A304 ①	21
316L Stainless Steel 3/2, 5/2							WBIS8551A309 ②	22				WBIS8551A310 ②	22
Aluminum 3/2, 5/2	1/2	1/2	3.7				WBIS8553A301	22				WBIS8553A302	22
316L Stainless Steel 3/2, 5/2							WBIS8553A309 ②	22				WBIS8553A310 ②	22

① 1/8" NPT exhaust for 1/4" aluminum and brass. ② Can be used for ***dry*** natural gas service.

ASCO®

Specifications (Metric units)

2/2 VALVES, NORMALLY CLOSED, with NBR Disc										
Pipe Size (ins.)	Orifice Size (mm)	Kv Flow Factor (m3/h)	Operating Pressure Differential (bar) Air-Inert Gas Min.	Max.	Max. Fluid and Ambient Temp. ˚C	Brass Body Catalog Number	Const. Ref.	Stainless Steel Body Catalog Number	Const. Ref.
1/4	1	.07	0	10.3	60	WBIS8262A320	1	WBIS8262A386	1A
3/8	8	1.29	0.7	10.3	60	WBIS8223A323	2	-	-
1/2	10	2.74	1.7	10.3	60	WBIS8223A303	3	WBIS8223A310	3

3/2 VALVES										
Pipe Size (ins.)	Orifice Size (mm)	Kv Flow Factor (m3/h) Pressure to Cylinder	Kv Flow Factor (m3/h) Cylinder to Exhaust	Operating Pressure Differential (bar) Air-Inert Gas Min.	Max.	Max. Fluid and Ambient Temp. ˚C	Brass Body Catalog Number	Const. Ref.	Stainless Steel Body Catalog Number	Const. Ref.
UNIVERSAL OPERATION (Pressure at any port) with NBR Disc										
1/4	2	.07	.07	0	10.3	60	WBIS8314A300	4	WBIS8314A301	4A
NORMALLY CLOSED (Closed when de-energized)										
1/4	8	1.29	1.29	⑥	10.3	60	WBIS8316A301 ③	5	WBIS8316A381V ⑤	8
3/8	8	1.37	1.37	⑥	10.3	60	WBIS8316A302 ③	5	WBIS8316A382V ⑤	8
3/8	16	3.43	3.43	⑥	10.3	60	WBIS8316A303 ③	6	-	-
1/2	16	3.43	3.43	⑥	10.3	60	WBIS8316A304 ③	6	WBIS8316A384V ⑤	9
3/4	17	4.71	4.71	0.7	10.3	60	WBIS8316A374 ③	7	-	-
1	25	11.14	11.14	0.7	10.3	60	WBIS8316A334 ③	7A	-	-
UNIVERSAL OPERATION (Normally Closed or Normally Open) "Quick Exhaust" with CR Diaphragm and NBR Disc										
1/4	②	.07	.63	0.3	10.3	60	WBIS8317A307 ①	10	WBIS8317A308 ①	11
4/2 VALVES, with NBR Disc and Seal										
1/4	2	.07	.07	0.7	10.3	60	WBIS8345A301 ①③	12	WBIS8345A381 ①③	12
4/2 VALVES, Brass Body with NBR Disc							Single Solenoid	Const. Ref.	Dual Solenoid	Const. Ref.
1/4	6	.69	.86	0.7	10.3	60	WBIS8344A370 ①③	13	WBIS8344A344 ③	16
3/8	10	1.20	1.89	0.7	10.3	60	WBIS8344A372 ①③	14	WBIS8344A380 ③	17
1/2	10	1.20	1.89	0.7	10.3	60	WBIS8344A374 ①③	14	WBIS8344A382 ③	17
3/4	19	4.46	4.80	0.7	10.3	60	WBIS8344A376 ①③	15	WBIS8344A354 ③	18
1	19	4.46	4.80	0.7	10.3	60	WBIS8344A378 ①③	15	WBIS8344A356 ③	18

① There are two exhaust flows in the exhaust mode (pilot and main). The pilot exhaust must be connected to the main exhaust when the air or inert gas can not be exhausted to the atmosphere.

② For "Quick Exhaust" valves, pressure port is 1/16", exhaust port is 1/4".

③ **IMPORTANT:** A minimum operating pressure differential must be maintained between the pressure and exhaust ports. Supply and exhaust piping must be full area, unrestricted. ASCO flow controls and other similar components must be installed in the cylinder lines only.

⑤ Diaphragm and main disc FKM only (pilot is low-temperature NBR).

⑥ Zero minimum when valve selection gasket is in external position and proper auxiliary air pressure is applied. See chart on page 146 for auxiliary pressure vs. mainline pressure. Minimum 1 bar Operating Pressure Differential when selection gasket is in the internal position.

Specifications (Metric units)

Body Material	Pipe Size (ins.)	Orifice Size (mm)	Kv Flow Factor	Single Solenoid: Operating Pressure Differential (bar) Air-Inert Gas Min.	Single Solenoid: Operating Pressure Differential (bar) Air-Inert Gas Max.	Single Solenoid: Max. Fluid Temp.˚C	Single Solenoid: Catalog Number	Single Solenoid: Const. Ref.	Dual Solenoid: Operating Pressure Differential (bar) Air-Inert Gas Min.	Dual Solenoid: Operating Pressure Differential (bar) Air-Inert Gas Max.	Dual Solenoid: Max. Fluid Temp.˚C	Dual Solenoid: Catalog Number	Dual Solenoid: Const. Ref.
3/2, 5/2, 5/3 VALVES, with NBR and PUR Seals													
Aluminum 3/2	1/4	6	.7	2	10	60	WBIS8551A305	19	2	10	60	WBIS8551A306	19
Aluminum 5/2							WBIS8551A317	20				WBIS8551A318	20
Aluminum 5/3 Center Closed							-	-				WBIS8551A367	20
Aluminum 5/3 Center Open							-	-				WBIS8551A368	20
Brass 3/2							WBIS8551A307	19				WBIS8551A308	19
Brass 5/2							WBIS8551A319	20				WBIS8551A320	20
316L Stainless Steel 3/2							WBIS8551A313 ②	19				WBIS8551A314 ②	19
316L Stainless Steel 5/2							WBIS8551A321 ②	20				WBIS8551A322 ②	20
Aluminum 3/2	1/2	13	3.7				WBIS8553A305	19				WBIS8553A306	19
Aluminum 5/2							WBIS8553A317	20				WBIS8553A318	20
316L Stainless Steel 3/2							WBIS8553A313 ②	19				WBIS8553A314 ②	19
316L Stainless Steel 5/2							WBIS8553A321 ②	20				WBIS8553A322 ②	20

Body Material	Pipe Size (ins.)	Orifice Size (mm)	Kv Flow Factor	Single Solenoid: Operating Pressure Differential (bar) Air-Inert Gas Min.	Single Solenoid: Operating Pressure Differential (bar) Air-Inert Gas Max.	Single Solenoid: Max. Fluid Temp.˚C	Single Solenoid: Catalog Number	Single Solenoid: Const. Ref.	Dual Solenoid: Operating Pressure Differential (bar) Air-Inert Gas Min.	Dual Solenoid: Operating Pressure Differential (bar) Air-Inert Gas Max.	Dual Solenoid: Max. Fluid Temp.˚C	Dual Solenoid: Catalog Number	Dual Solenoid: Const. Ref.
3/2, 5/2, 5/3 VALVES, with NBR and PUR Seals, NAMUR Mount													
Aluminum 3/2, 5/2	1/4	6	.7	2	10	60	WBIS8551A301 ①	21	2	10	60	WBIS8551A302 ①	21
Aluminum 5/3 Center Closed							-	-				WBIS8551A365	22
Aluminum 5/3 Center Open							-	-				WBIS8551A366	22
Brass 3/2, 5/2							WBIS8551A303 ①	21				WBIS8551A304 ①	21
316L Stainless Steel 3/2, 5/2							WBIS8551A309 ②	22				WBIS8551A310 ②	22
Aluminum 3/2, 5/2	1/2	13	3.7				WBIS8553A301	22				WBIS8553A302	22
316L Stainless Steel 3/2, 5/2							WBIS8553A309 ②	22				WBIS8553A310 ②	22

① 1/8" NPT exhaust for 1/4" aluminum and brass. ② Can be used for ***dry*** natural gas service.

Dimensions: inches (mm)

Const. Ref. 1, 1A

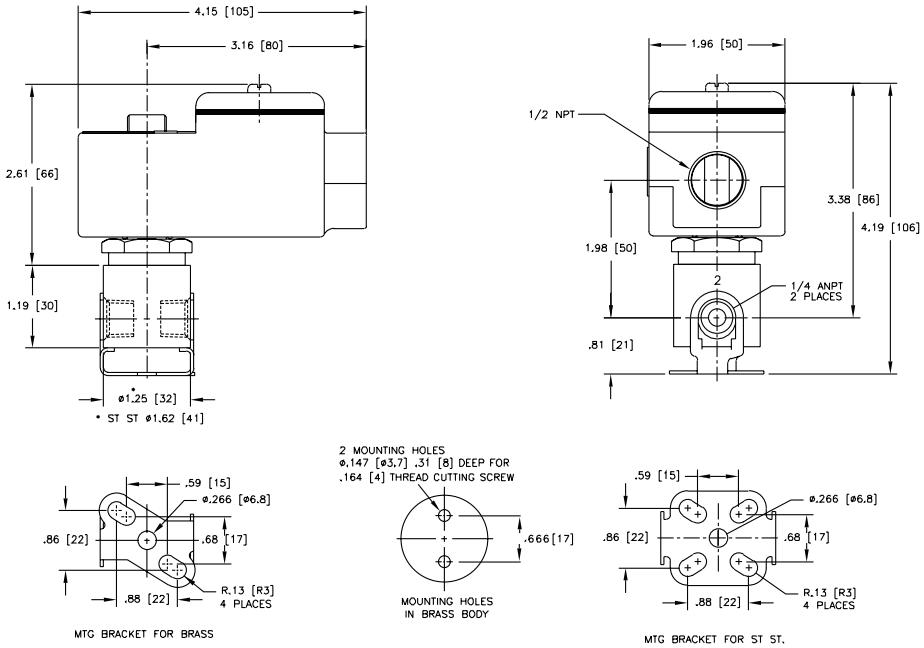

Const. Ref. 2

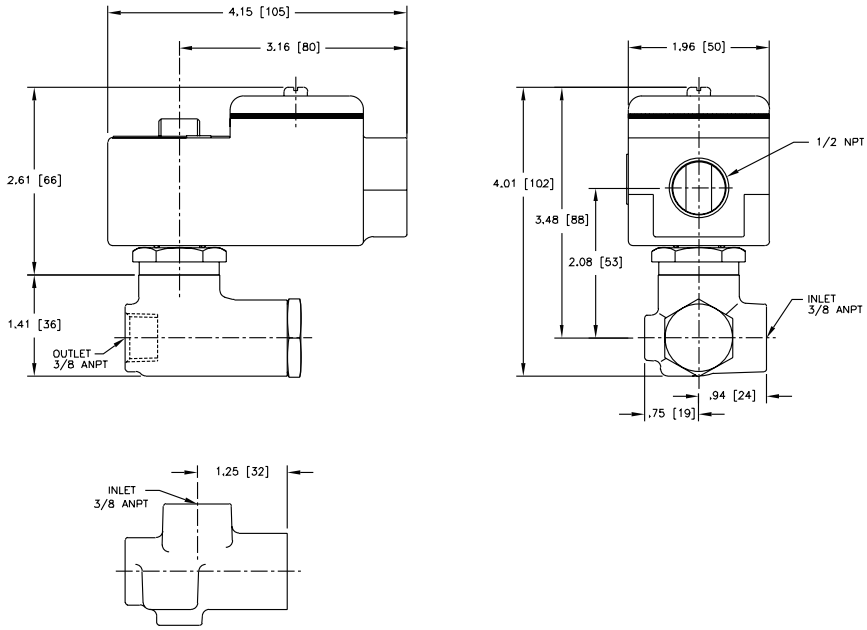

SPECIAL SERVICE PILOT

Dimensions: inches (mm)

Const. Ref. 3

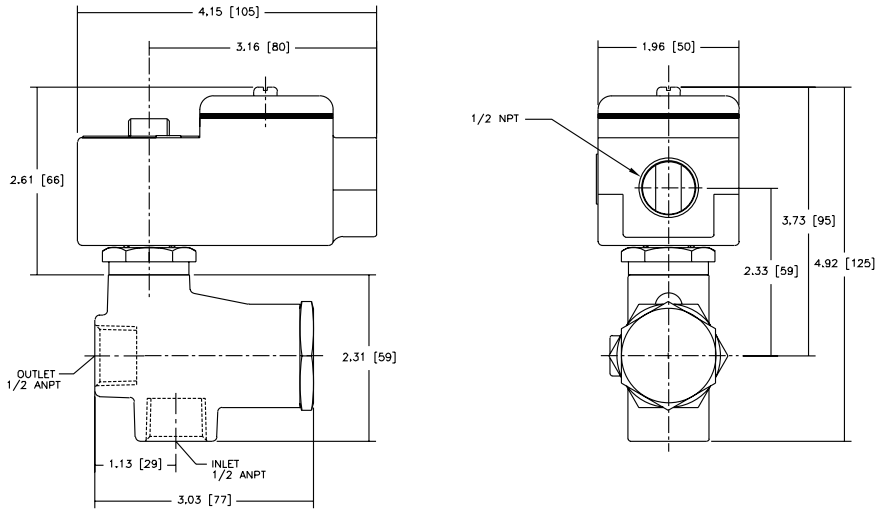

Const. Ref. 4, 4A

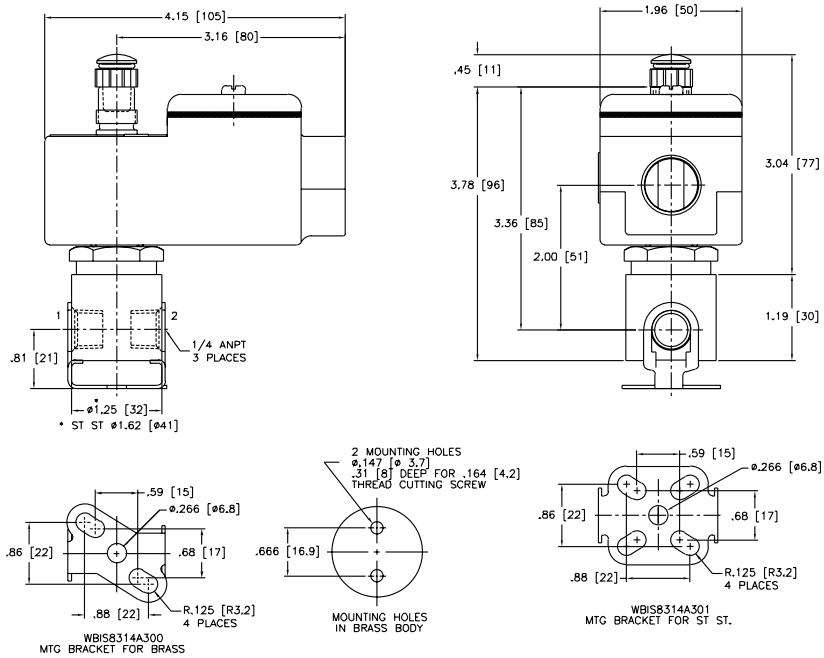

ASCO®

Dimensions: inches (mm)

Const. Ref. 5

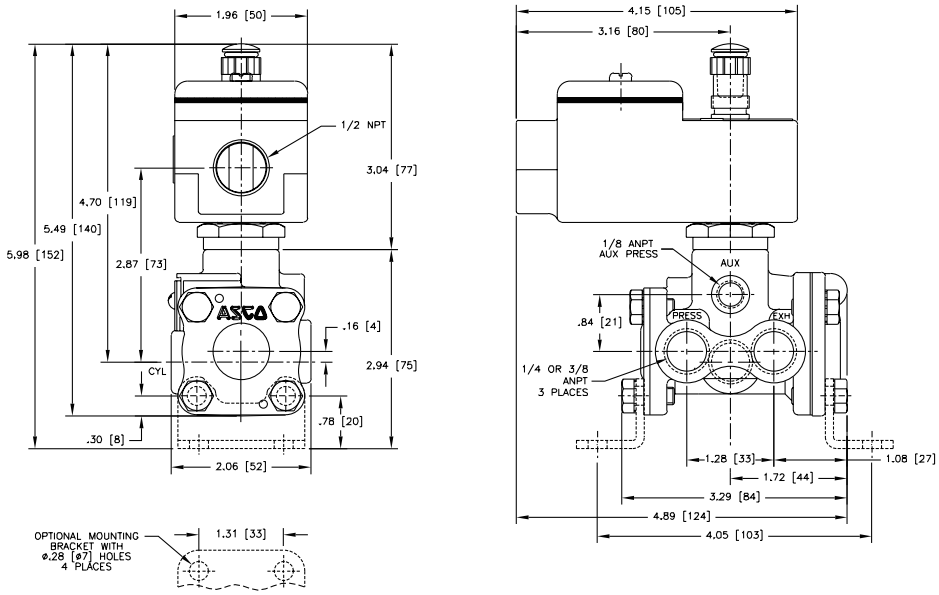

Const. Ref. 6

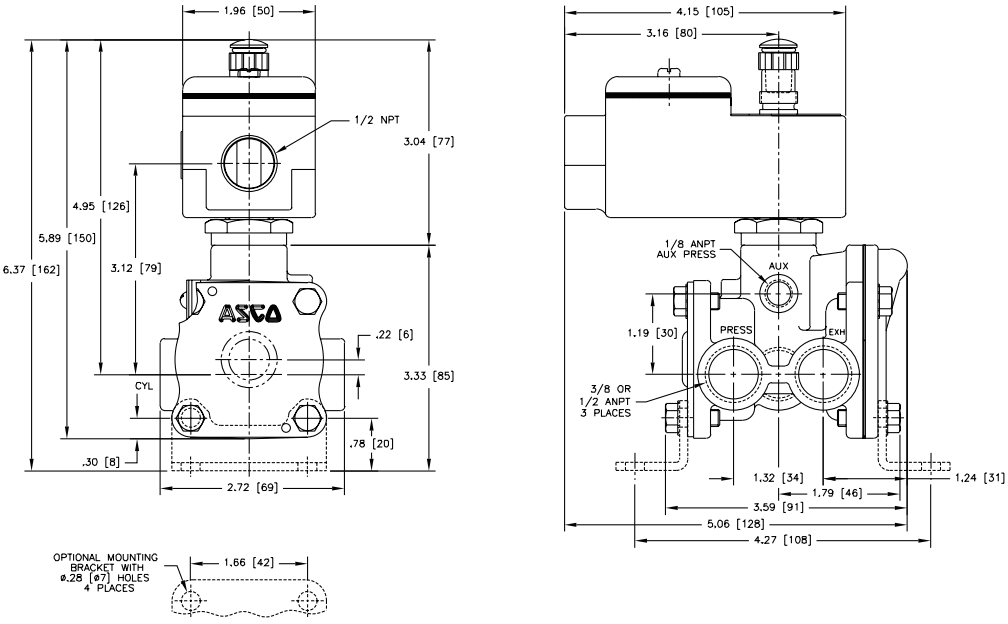

SPECIAL SERVICE PILOT

Dimensions: inches (mm)

Const. Ref. 7, 7A

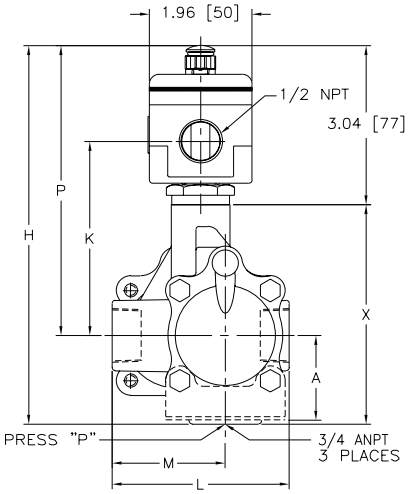

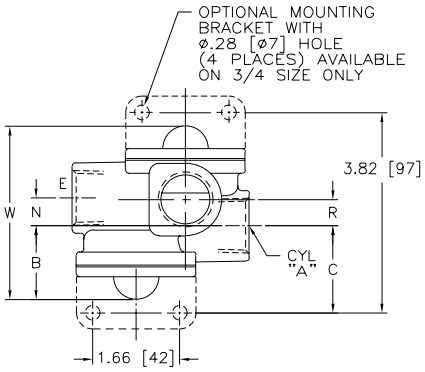

Catalog No.		A	B	C	H	K	L	M	N	P	R	W	X
WBIS8316A374	ins.	1.61	1.41	1.66	7.23	3.71	3.38	2.16	.53	5.54	.50	3.31	4.19
	mm	41	36	42	184	94	86	55	13	141	13	84	106
WBIS8316A334	ins.	-	1.78	-	7.85	3.96	4.44	2.81	.87	5.79	1.74	5.32	4..81
	mm	-	45	-	199	100	113	71	22	147	44	135	122

Const. Ref. 8

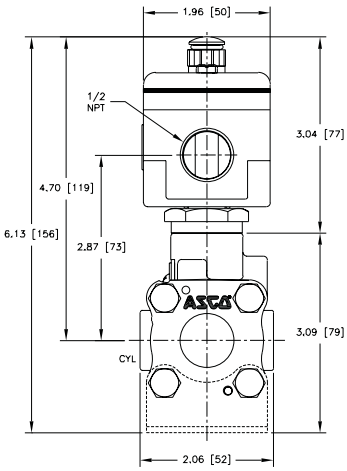

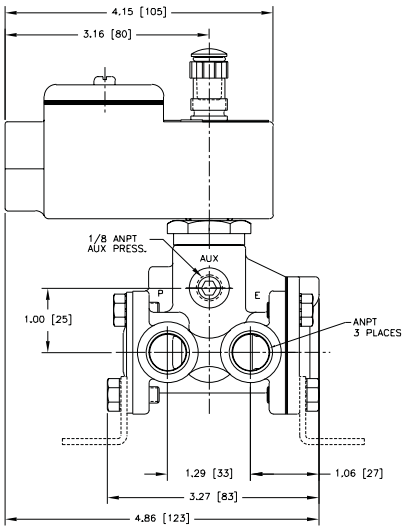

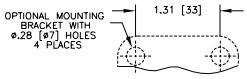

Dimensions: inches (mm)

Refer to note ⑥.
For all 8316 "0" Minimum Series only.

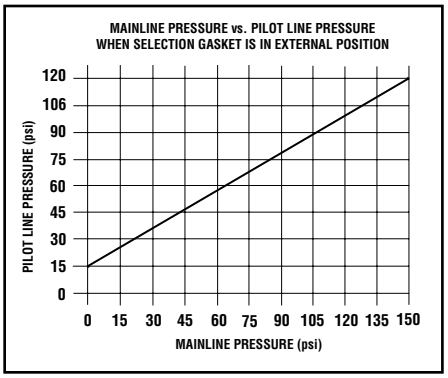

Const. Ref. 9

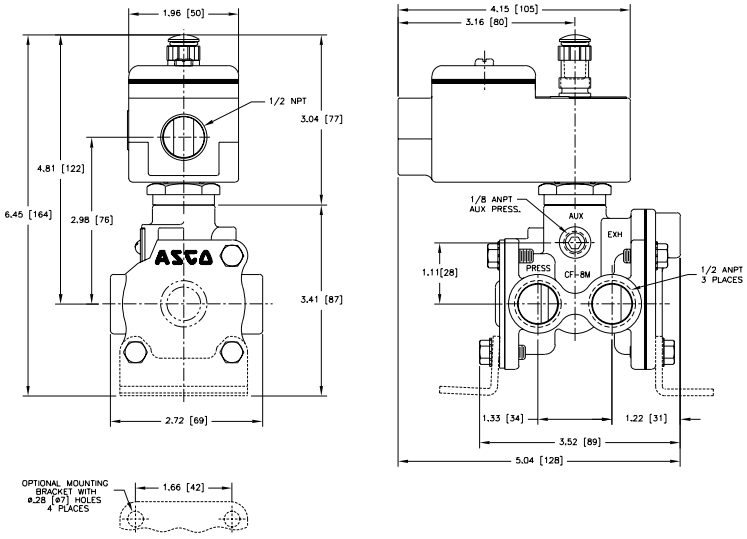

Const. Ref. 10

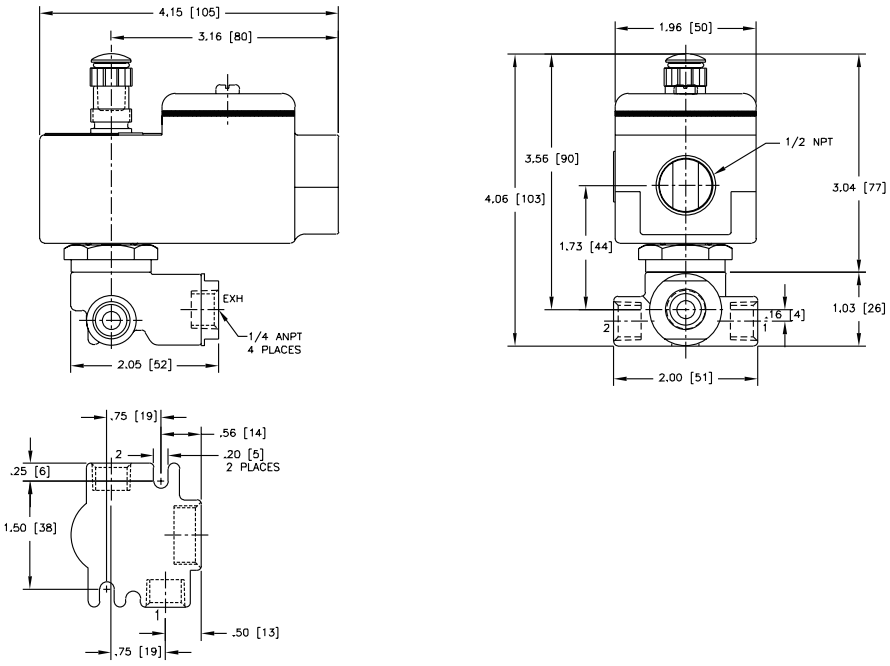

Dimensions: inches (mm)

Const. Ref. 11

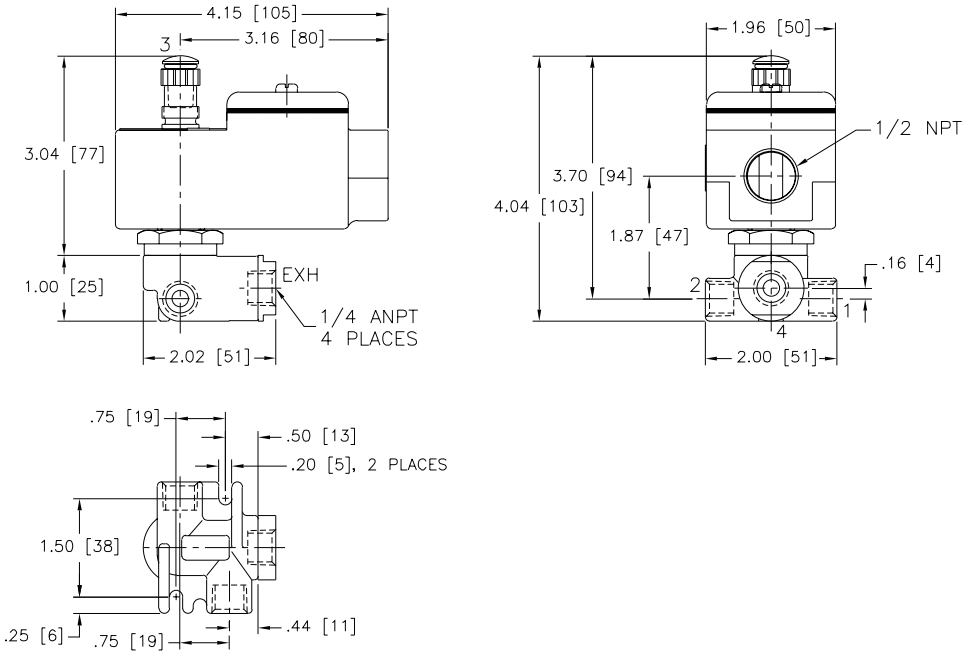

Const. Ref. 12

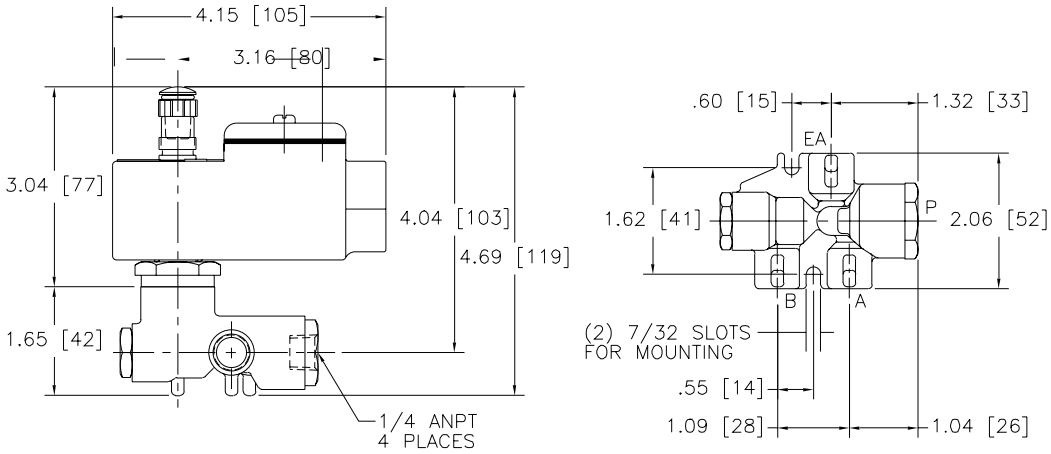

ASCO®

Dimensions: inches (mm)

Const. Ref. 13-18

13-15

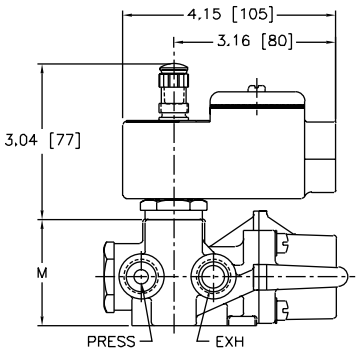

16-18

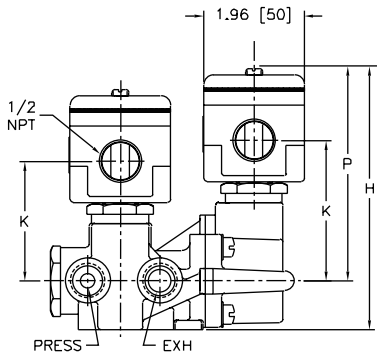

All

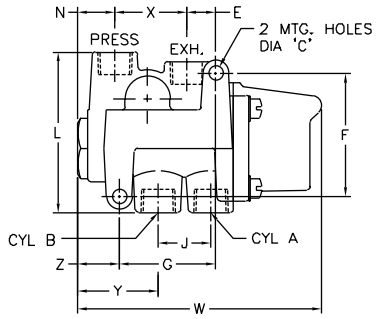

Catalog No.		ØC	E	F	G	H	J	K	L	M	N	P	W	X	Y	Z	Exhaust Pipe Size
WBIS8344A370	ins.	.28	.56	2.41	1.88	5.12	1.03	2.33	3.13	2.08	.72	4.16	4.75	1.41	1.56	.81	3/8"
	mm	7.1	14	61	48	130	26	59	80	53	18	106	121	36	40	21	
WBIS8344A380, 382	ins.	.34	.77	3.12	2.62	5.72	1.50	2.77	3.18	2.06	.83	4.60	6.06	1.86	1.90	.84	1/2"
	mm	8.6	20	79	67	145	38	70	81	52	21	117	154	47	48	21	
WBIS8344A372, 374	ins.	.34	.77	3.12	2.62	5.10	1.50	2.14	3.18	2.06	.83	3.98	6.06	1.86	1.90	.84	1/2"
	mm	8.6	20	79	67	120	38	54	81	52	21	101	154	47	48	21	
WBIS8344A344	ins.	.28	.56	2.41	1.88	5.12	1.03	2.74	3.13	2.08	.72	4.16	4.75	1.41	1.56	.81	3/8"
	mm	7.1	14	61	48	130	26	70	80	53	18	106	121	36	40	21	
WBIS8344A376, 378	ins.	.34	1.37	3.81	3.88	5.90	2.09	2.52	4.56	2.86	1.55	4.35	8.25	2.12	2.63	1.16	1"
	mm	8.6	35	97	99	150	53	64	116	73	39	110	210	54	67	30	
WBIS8344A354, 356	ins.	.34	137	3.81	3.88	6.54	2.09	3.21	4.56	2.81	1.55	4.35	8.25	2.12	2.63	1.16	1"
	mm	8.6	35	97	99	168	53	81	116	71	39	110	210	54	67	30	

IMPORTANT: Valves can be mounted in any position.

Dimensions: inches (mm)

Series	8551	8553
NPT	1/4	1/2
L1 ①	5.12 (132)	6.00 (153)
L2 ①	6.73 (171)	7.80 (198)
H2	4.38 (111)	4.77 (121)
H1	1.10 (28)	1.58 (40)
W	1.77 (45)	2.85 (72)

① Manual override option MH adds .250" (6.4), MS option adds .468" (11.9) to each solenoid endcap.

Optional Manual Operators		
Add Suffix		Description
MO	1 0 2	Push and turn to lock with flat head screwdriver slot
MI	1 0 2	Momentary push in with flat head screwdriver slot
MH	1 0 2	Momentary push in by hand
MS	1 0 2	Push and turn to lock by hand

Const. Ref. 19

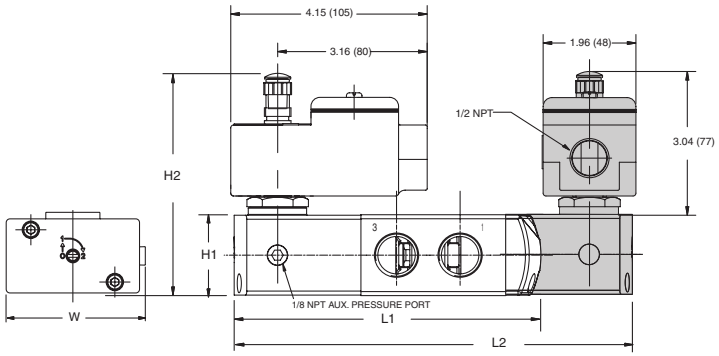

Series	8551	8553
NPT	1/4	1/2
L1 ①	5.63 (144)	7.06 (180)
L2 ①	7.20 (183)	8.86 (225)
H2	4.38 (111)	4.77 (121)
H1	1.10 (28)	1.58 (40)
W	1.77 (45)	2.85 (72)

① Manual override option MH adds .250" (6.4), MS option adds .468" (11.9) to each solenoid endcap.

Optional Manual Operators		
Add Suffix		Description
MO	1 0 2	Push and turn to lock with flat head screwdriver slot
MI	1 0 2	Momentary push in with flat head screwdriver slot
MH	1 0 2	Momentary push in by hand
MS	1 0 2	Push and turn to lock by hand

Const. Ref. 20

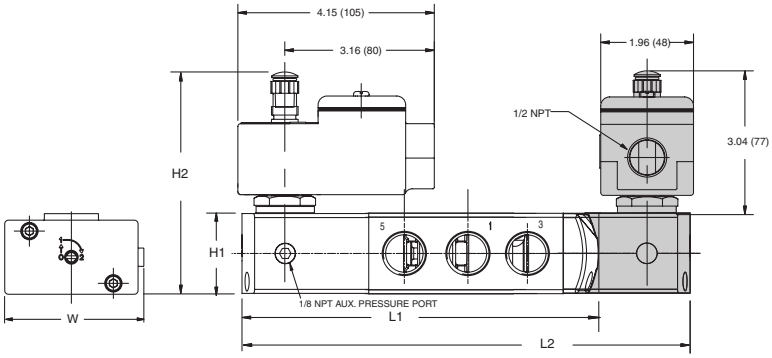

ASCO®

Dimensions: inches (mm)

Series	8551 (Aluminum, Brass)
NPT	1/4
L1 ①	4.96 (126)
L2 ①	6.49 (165)
H2	4.38 (111)
H1	1.57 (40)
W	1.77 (45)

① Manual override option MH adds .250" (6.4), MS option adds .468" (11.9) to each solenoid endcap.

Optional Manual Operators		
Add Suffix		Description
MO	1 0 2	Push and turn to lock with flat head screwdriver slot
MI	1 0 2	Momentary push in with flat head screwdriver slot
MH	1 0 2	Momentary push in by hand
MS	1 0 2	Push and turn to lock by hand

Const. Ref. 21

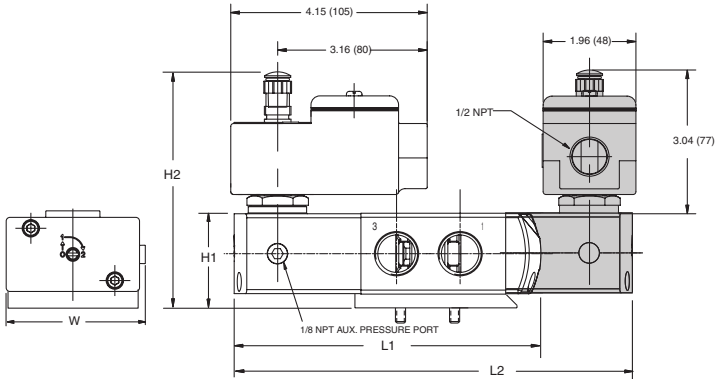

8551 NAMUR Footprint

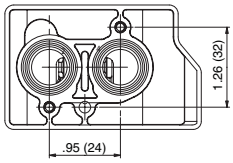

Series	8551 (316L SS)	8551 (5/3)	8553
NPT	1/4	1/4	1/2
L1 ①	5.20 (132)	-	7.08 (180)
L2 ①	6.73 (171)	7.44 (189)	8.85 (225)
H2	4.38 (111)	4.38 (111)	4.77 (121)
H1	1.57 (40)	1.57 (40)	2.08 (53)
W	1.77 (45)	1.77 (45)	2.87 (73)

① Manual override option MH adds .250" (6.4), MS option adds .468" (11.9) to each solenoid endcap.

Optional Manual Operators		
Add Suffix		Description
MO	1 0 2	Push and turn to lock with flat head screwdriver slot
MI	1 0 2	Momentary push in with flat head screwdriver slot
MH	1 0 2	Momentary push in by hand
MS	1 0 2	Push and turn to lock by hand

Const. Ref. 22

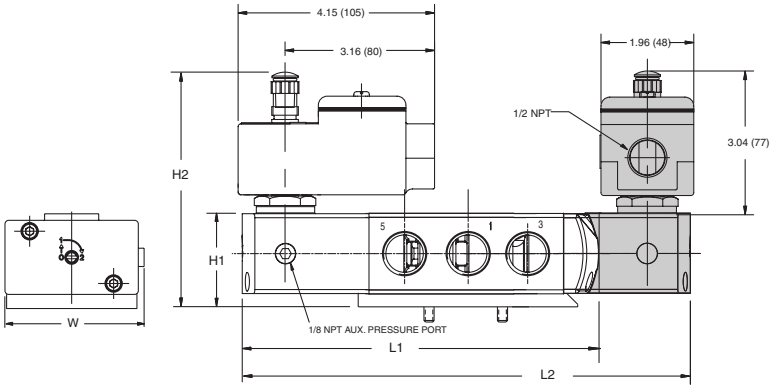

8553 NAMUR Footprint

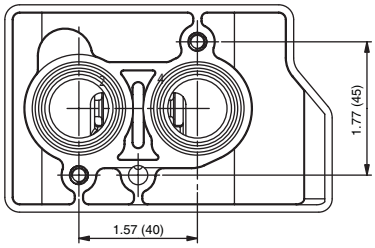

8551 NAMUR Footprint

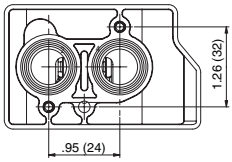

SPECIAL SERVICE PILOT