MECHANICAL / PLUMBING SYMBOLS AND ABBREVIATIONS

PLUMBING

- COLD WATER
- HOT WATER
- HOT WATER RETURN
- 140° — HOT WATER (140° F)
- 140° — HOT WATER RETURN (140° F)
- 180° — HOT WATER (180° F)
- 180° — HOT WATER RETURN (180° F)
- T — TEMPERED WATER
- CSW — COLD SOFT WATER
- HSW — HOT SOFT WATER
- HSWR — HOT SOFT WATER RETURN
- NPW — NON-POTABLE WATER
- G — GAS
- A — AIR (WITH PSI)
- STORM WATER (SUSPENDED)
- STORM WATER (BURIED)
- SANITARY WASTE (SUSPENDED)
- SANITARY WASTE (BURIED)
- SANITARY VENT LINE
- D — DRAIN LINE
- WW — WELL WATER
- GM — GAS METER
- WM — WATER METER
- RPBP (REDUCED PRESSURE BACKFLOW PREVENTER)
- RPZ (REDUCED PRESSURE BACKFLOW PREVENTER)

PIPE FITTINGS

- ELBOW UP
- ELBOW DOWN
- TEE UP
- TEE DOWN
- CONCENTRIC REDUCER
- ECCENTRICAL REDUCER
- END CAP
- UNION
- STRAINER
- FLANGED CONNECTION
- FLOW ARROW
- PIPE ANCHOR
- EXPANSION JOINT
- PIPE SLEEVE
- PIPE ALIGNMENT GUIDES
- FLEX CONNECTOR
- PIPE PITCH ARROW (DOWN IN ARROW DIRECTION)
- PRESSURE GAUGE
- AUTOMATIC AIR VENT
- COMPOUND GAUGE
- AIR CHAMBER
- SHOCK ABSORBER
- ELBOW
- TEE
- CO — CLEANOUT
- FD — FLOOR DRAIN
- THERMOMETER

STEAM PIPING

- BFW — BOILER FEED WATER
- EBFW — EMERGENCY BOILER FEED WATER
- LPS — LOW PRESSURE STEAM
- MPS — MEDIUM PRESSURE STEAM
- HPS — HIGH PRESSURE STEAM
- LPR — LOW PRESSURE CONDENSATE RETURN
- MPR — MEDIUM PRESSURE CONDENSATE RETURN
- HPR — HIGH PRESSURE CONDENSATE RETURN
- PD — CONDENSATE PUMP DISCHARGE
- CR — CONDENSATE RETURN
- F&T — FLOAT & THERMOSTATIC TRAP
- IB — INVERTED BUCKET TRAP
- T — THERMOSTATIC TRAP

HVAC PIPING

- CS — CONDENSER WATER SUPPLY
- CR — CONDENSER WATER RETURN
- CHWS — CHILLED WATER SUPPLY
- CHWR — CHILLED WATER RETURN
- GS — GROUND LOOP WATER SUPPLY
- GR — GROUND LOOP WATER RETURN
- HS — HEATING WATER SUPPLY
- HR — HEATING WATER RETURN
- FOS — FUEL OIL SUPPLY
- FOR — FUEL OIL RETURN
- FOV — FUEL OIL VENT
- RD — REFRIGERANT DISCHARGE
- RS — REFRIGERANT SUCTION
- RL — REFRIGERANT LIQUID
- RHG — REFRIGERANT HOT GAS
- DTS — DUAL TEMPERATURE SUPPLY
- DTR — DUAL TEMPERATURE RETURN

VALVES

- SHUT-OFF VALVE
- VERTICAL SHUT-OFF/NEEDLE VALVE
- BALANCING VALVE
- CHECK VALVE
- PRESSURE REDUCING VALVE
- MAKEUP WATER VALVE
- TCV — FLOW CONTROL VALVE
- SAFETY/PRESSURE RELIEF VALVE
- AUTOMATIC AIR VENT
- TEMP/PRESSURE RELIEF VALVE
- CONTROL VALVE (TCV)
- 3-WAY CONTROL VALVE
- THROTTLING VALVE

REFRIGERATION VALVES/FITTINGS

- D — FILTER-DRYER
- S — SIGHT GLASS
- CHARGING VALVE
- EVAPORATOR PRESSURE REGULATOR
- MANUAL REFRIGERATION VALVE
- THERMOSTATIC EXPANSION VALVE

RADIATION SYMBOLS

- FINNED TUBE RADIATION
- FINNED TUBE RADIATION IN COVER
- BARE PIPE IN COVER
- RADIATION COVER ONLY

DUCT SYMBOLS

- VOLUME DAMPER
- SUPPLY DUCT UP
- RETURN OR EXHAUST DUCT UP
- SUPPLY DUCT DOWN
- RETURN OR EXHAUST DUCT DOWN
- INTERNAL LINED DUCT
- FD — FIRE DAMPER (FD) IN DUCT
- FSD — COMBINATION FIRE/SMOKE DAMPER (FSD) IN DUCT
- SD — SMOKE DAMPER (SD) IN DUCT
- ACCESS PANEL

FIRE PROTECTION SYSTEM

- PENDANT SPRINKLER HEAD
- UPRIGHT SPRINKLER HEAD
- CONCEALED SPRINKLER HEAD
- F — FIRE PROTECTION PIPING
- DS — DRY STANDPIPE
- DP — DRY PIPE SPRINKLER PIPING
- PA — PRE-ACTION SPRINKLER PIPING
- WP — WET FIRE PROTECTION PIPING
- FIRE HYDRANT
- SIAMESE HOSE CONNECTION
- PIV — POST INDICATOR VALVE
- TS — TAMPER SWITCH
- FS — FLOW SWITCH
- ALARM CHECK VALVE

MEDICAL

- G — GAS OUTLET
- O — OXYGEN OUTLET
- MA — MEDICAL AIR OUTLET
- N — NITROGEN OUTLET
- NO — NITROUS OXIDE OUTLET
- V — VACUUM OUTLET
- S — SLIDE
- MA — MEDICAL AIR
- N — NITROGEN
- O — OXYGEN
- NO — NITROUS OXIDE
- V — VACUUM LINE
- ACID WASTE (SUSPENDED)
- ACID WASTE (BURIED)
- DW — DISTILLED WATER
- AV — ACID VENT
- DI — DEIONIZED WATER

ABBREVIATIONS

AD	AREA DRAIN	INV. EL.	INVERT ELEVATION
AFC	AUTOMATIC FLOW CONTROL	LAT	LEAVING AIR TEMPERATURE
AFF	ABOVE FINISHED FLOOR	LAV	LAVATORY
AHR	AIR HOSE REEL	MBH	1000 BTU/HOUR
AHU	AIR HANDLING UNIT	MECH	MECHANICAL
ALT	ALTERNATE	MH	MANHOLE
AP	ACCESS PANEL	MC	MECHANICAL CONTRACTOR
AS	AIR SEPARATOR	MS	MOP SINK
BD	BLOWDOWN	MUV	AUTOMATIC MAKE-UP VALVE
BDD	BACKDRAFT/PRESSURE RELIEF DAMPER	NC	NORMALLY CLOSED
BTU	BRITISH THERMAL UNIT	NO	NORMALLY OPEN
BV	BALANCE VALVE	OA	OUTSIDE AIR
CB	CATCH BASIN	OBD	OPPOSED BLADE DAMPER
CI	CAST IRON	OD	OUTSIDE DIAMETER
CL	CENTERLINE	OFD	OVERFLOW DRAIN
CO	CLEANOUT	OSD	OPEN SITE DRAIN
COND	CONDENSATE	PFHX	PLATE AND FRAME HEAT EXCHANGER
CONV	HYDRONIC CONVECTOR	PIV	POST INDICATOR VALVE
CUH	CABINET UNIT HEATER	PLBG	PLUMBING
CW	COLD WATER	PRV	PRESSURE REDUCING VALVE
DB	DRY BULB	PUH	PROPELLER UNIT HEATER
DF	DRINKING FOUNTAIN	RA	RETURN AIR
DIA	DIAMETER	RCP	RADIANT CEILING HEATING PANEL
DIFF	DIFFUSER	RCNP	REINFORCED CONCRETE PIPE
DS	DOWNSPOUT	RD	ROOF DRAIN
DXC	DIRECT EXPANSION COOLING COIL	RECIRC	RECIRCULATING
EA	EXHAUST AIR	RG	RETURN GRILLE
EAT	ENTERING AIR TEMPERATURE	RPZ	REDUCED PRESSURE BACKFLOW PREVENTER
EBBR	ELECTRIC BASE BOARD RADIATION	RR	RETURN REGISTER
EC	ELECTRICAL CONTRACTOR	RIV	ROOF INTAKE VENT
EG	EXHAUST GRILLE	RRV	ROOF RELIEF VENT
ECONV	ELECTRIC CONVECTOR	SA	SUPPLY AIR
ECUH	ELECTRIC CABINET UNIT HEATER	SAN	SANITARY
EF	EXHAUST FAN	SD	SMOKE DAMPER
ELEC	ELECTRICAL	SG	SUPPLY GRILLE
ELEV	ELEVATION	SHDR	SHOWER DRAIN
EOM	END OF MAIN DRIP	SK	SINK
EPUH	ELECTRIC PROPELLER UNIT HEATER	SR	SUPPLY REGISTER
ER	EXHAUST REGISTER	SS	STAINLESS STEEL
ERCP	ELECTRIC RADIANT CEILING PANEL	STHX	SHELL AND TUBE HEAT EXCHANGER
ESP	EXTERNAL STATIC PRESSURE	TCC	TEMPERATURE CONTROL CONTRACTOR
EWC	ELECTRIC WATER COOLER	TCP	TEMPERATURE CONTROL PANEL
EWH	ELECTRIC WATER HEATER	TG	TRANSFER GRILLE
ET	EXPANSION TANK	TO	TRANSFER OPENING
EXTG, E.	EXISTING	TP	TRAP PRIMER LINE
FD	FLOOR DRAIN OR FIRE DAMPER	TYP	TYPICAL
FPVAV	FAN POWERED VAV	UR	URINAL
FOB	FLAT ON BOTTOM	VAV	VARIABLE AIR VOLUME
FSD	COMBINATION FIRE/SMOKE DAMPER	VCP	VITRIFIED CLAY PIPE
FTR	HYDRONIC FINNED TUBE RADIATION	VFD	VARIABLE FREQUENCY DRIVE
GC	GENERAL CONTRACTOR	VS	VENT STACK
GEN	GENERAL	VTR	VENT THRU ROOF
HB	HOSE BIBB	W	WASTE
HTG	HEATING	WB	WET BULB
HW	HOT WATER	WC	WATER CLOSET
ID	INTERNAL DIAMETER	WH	WALL HYDRANT
		WS	WASTE STACK

TEMPERATURE CONTROL/MONITORING

- T_H — ROOM THERMOSTAT (HEAT)
- $T_{H,C}$ — ROOM THERMOSTAT (HEAT/COOL)
- T_C — ROOM THERMOSTAT (COOL)
- T — DUCT THERMOSTAT (PNEUMATIC)
- T_E — DUCT THERMOSTAT (ELECTRIC)
- H — HUMIDISTAT
- CO_2 — CARBON DIOXIDE SENSOR
- FS — FLOW SWITCH
- T — TEMPERATURE SENSOR
- FM — FLOW METER
- M — MOTORIZED DAMPER
- DPT — DIFFERENTIAL PRESSURE TRANSMITTER
- PETE'S PLUG
- VFD — VARIABLE FREQUENCY DRIVE
- TCP — TEMPERATURE CONTROL PANEL

DRAWING NOTATIONS

- CONNECTION TO EXISTING
- DENOTED EXISTING WORK
- DENOTED NEW WORK
- SIZE OF PIPE OR DUCT
- 8"E.
- DENOTED EXISTING

SECTIONS AND DETAILS

- SECTION OR ELEVATION NUMBER
- SHEET NUMBER OF SECTION OR ELEVATION
- DETAIL (LETTER)
- SHEET NUMBER OF DETAIL LOCATION

GENERAL NOTES:

1. THESE NOTES APPLY TO EACH AND EVERY DRAWING IN THIS SET.
2. ALL NEW WORK IS DRAWN DARK. ALL WORK DRAWN LIGHT AND FOLLOWED BY (E.) IS EXISTING. ALL WORK SHALL REMAIN UNLESS SPECIFICALLY NOTED OTHERWISE.
3. FIELD VERIFY ALL EXISTING CONDITIONS AS TO EXACT SERVICE, LOCATION, TYPE OF MATERIAL, ETC. BEFORE BIDDING AND BEFORE BEGINNING RENOVATION WORK.
4. COORDINATE ALL SHUT-DOWNS, DELIVERY AND STORAGE OF MATERIALS, ETC. WITH OWNERS REPRESENTATIVE.
5. CONTRACTORS SHALL PROTECT ALL EXISTING OWNER FACILITIES DURING CONSTRUCTION. ANY AND ALL OWNER FACILITIES DAMAGED OR DISCONNECTED BY CONTRACTOR OPERATIONS SHALL BE FULLY RESTORED TO PREVIOUS OPERATING AND APPEARANCE CONDITION BY CONTRACTOR.
6. ADDITIONAL GENERAL NOTES SPECIFIC TO A PARTICULAR DRAWING ARE NOTED ON THOSE DRAWINGS.
7. THOROUGHLY REVIEW ALL DRAWINGS PRIOR TO ANY DEMOLITION WORK. ANY DEVICES REMOVED ACCIDENTALLY WILL BE REPLACED AT NO ADDITIONAL COST TO OWNER.
8. CONTRACTOR SHALL BE RESPONSIBLE FOR CORE DRILLING AND CUTTING HOLES THRU WALLS, FLOOR OR ROOF AS REQUIRED TO INSTALL NEW PIPING, DUCTWORK, ETC. WHETHER SHOWN OR NOT. PROVIDE SLEEVES FOR ALL PIPING AND CONDUIT THAT PENETRATE FULL HEIGHT WALLS.
9. SMOKING, ALCOHOL, DRUGS, WEAPONS AND CONTRABAND ARE STRICTLY FORBIDDEN ON THIS PROPERTY.
10. DISPOSAL OF DEMOLISHED MATERIALS SHALL COMPLY WITH ALL LOCAL, STATE AND FEDERAL REGULATIONS.
11. PROVIDE 24/24 ACCESS PANELS IN HARD CEILINGS WHEREVER ACCESS IS REQUIRED TO INSTALL OR SERVICE MECHANICAL EQUIPMENT.
12. CONTRACTOR SHALL PROVIDE MATERIALS AS REQUIRED TO PROTECT SURFACE OF EXISTING FINISHED FLOORS. PROVIDE PROTECTION UNDER WHEELS OF SCAFFOLDS, LIFTING DEVICES AND ANY OTHER EQUIPMENT THAT COULD DAMAGE THE EXISTING FLOOR FINISHES.
13. FIELD VERIFY EXACT SIZES OF EXISTING PIPING SYSTEMS SHOWN TO BE CONNECTED TO. IN THE EVENT ACTUAL SIZE IS DIFFERENT THAN SHOWN ON DRAWING, CONTACT ENGINEER FOR DIRECTION PRIOR TO ANY WORK.
14. NOTIFY THE OWNER A MINIMUM OF 72 HOURS PRIOR TO ANY SHUT-DOWN OR SERVICE INTERRUPTION. NOTIFICATION REQUIRED FOR ALL SHUT-DOWNS REGARDLESS OF SYSTEM(S) AFFECTED OR THEIR EXPECTED DURATIONS.
15. REMOVE AND REPLACE CEILINGS, LIGHT FIXTURES ETC. AS REQUIRED TO INSTALL MECHANICAL AND PLUMBING SYSTEMS. REPAIR TO PREVIOUS (OR BETTER) CONDITION. COORDINATE WITH 'A' SERIES DRAWINGS.
16. ALL WIRING AND/OR TUBING TO THERMOSTATS SHALL BE ROUTED CONCEALED. WIREMOLD IS NOT ACCEPTABLE. COORDINATE THERMOSTAT LOCATIONS WITH G.C. PRIOR TO WALL CONSTRUCTION.
17. MOUNT THERMOSTATS AT 56" A.F.F. UNLESS NOTES OTHERWISE.
18. COLORS OF EXPOSED UNITS SHALL BE SELECTED BY ARCHTECT. COLORS SHALL BE MANUFACTURER'S STANDARD OR CUSTOM COLOR AS REQUESTED. SUBMIT COLOR CHARTS WITH SHOP DRAWINGS.
19. ALL UNDERLINED EQUIPMENT IS SCHEDULED. SEE M600 SERIES DRAWINGS FOR SCHEDULES.

A MAXIMUM 6 HOUR DOWN-TIME OF PLUMBING SYSTEMS IS ALLOWED.

DANIEL E. DIMOND
REGISTERED
No. 60910351
STATE OF INDIANA
PROFESSIONAL ENGINEER

INDIANA STATE UNIVERSITY
DA #13052

R.E. Dimond and Associates, Inc.
Consulting Engineers
732 North Capitol Avenue
Indianapolis, IN 46204
Phone (317) 634-4672
Fax (317) 638-8725

UA UNIT I CHILDCARE RENOVATION
MARRIED STUDENT HOUSING

SYMBOLS AND ABBREVIATIONS, GENERAL NOTES

FILENAME:	
PROPERTY NO.:	
REVISIONS	
1	
2	
DATE:	05/01/2013
SCALE:	AS SHOWN
DRAWN BY:	S.D.F.
CHECKED BY:	D.E.D.
APPROVED BY:	D.E.D.
PROJECT NO.:	DA #13052

SHEET NO.:

MP001

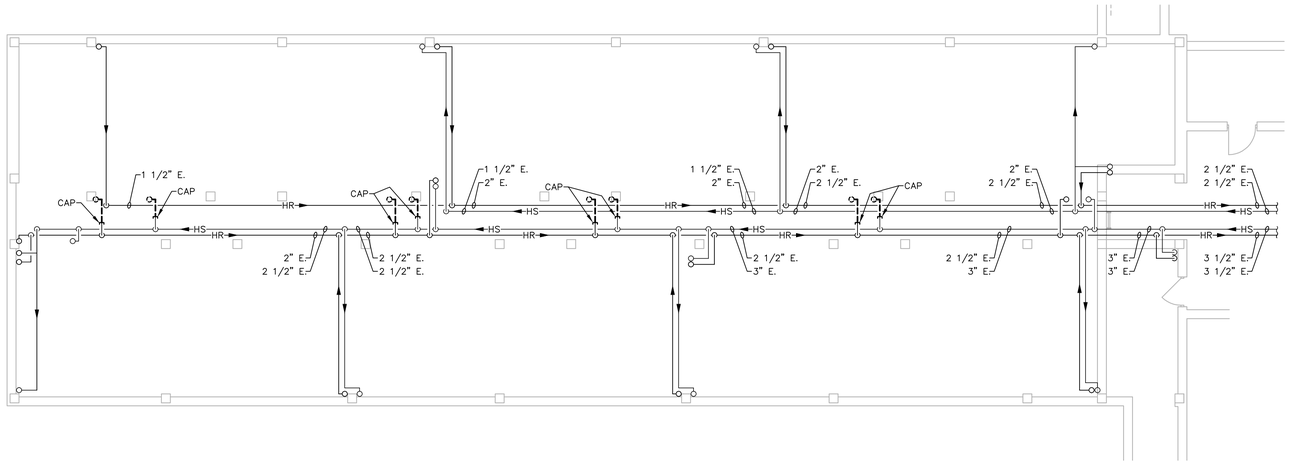

CRAWL SPACE PLAN - MECHANICAL DEMOLITION

SCALE: 1/8" = 1'-0"

NORTH

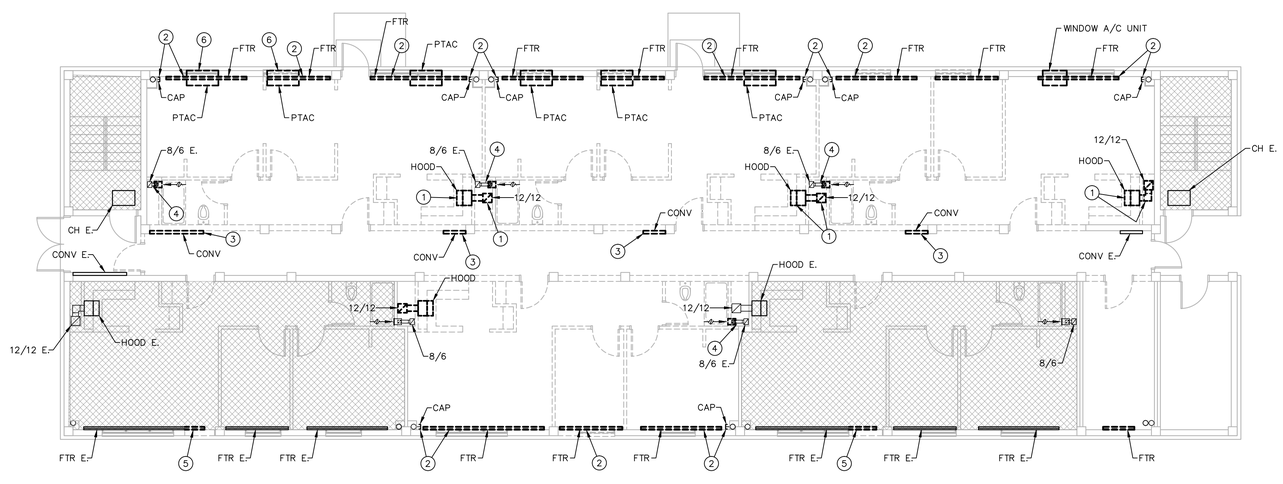

FIRST FLOOR PLAN - MECHANICAL DEMOLITION

SCALE: 1/4" = 1'-0"

NORTH

DEMOLITION GENERAL NOTES

1. ALL PIPING AND EQUIPMENT ABANDONED BY NATURE OF NEW CONSTRUCTION SHALL BE REMOVED IN THIS CONTRACT.
2. THOROUGHLY REVIEW ALL DRAWINGS PRIOR TO ANY DEMOLITION WORK. ANY DEVICES REMOVED ACCIDENTALLY WILL BE REPLACED AT NO ADDITIONAL COST TO OWNER.
3. REMOVE ALL PIPING, EQUIPMENT, VALVES, ETC., DRAWN DARK DASHED. ALL PIPING, EQUIPMENT, VALVES, ETC., DRAWN LIGHT SHALL REMAIN.
4. INSTALL CAPS ON ALL PIPING AND DUCTWORK WHERE THEY ARE LEFT OPEN ENDED BY DEMOLITION.
5. FIELD VERIFY ALL EXISTING CONDITIONS AS TO EXACT SERVICE, LOCATION, TYPE OF MATERIAL, ETC. BEFORE BIDDING AND BEFORE BEGINNING ANY DEMOLITION.
6. REMOVE ALL HANGERS, STRAPS, BRACKETS, ETC. ASSOCIATED WITH DUCTWORK AND OR PIPING TO BE REMOVED.
7. MECHANICAL CONTRACTOR SHALL REMOVE AND REPLACE EXISTING CEILINGS, LIGHT FIXTURES, ETC. IN EXISTING BUILDING AS REQUIRED TO PERFORM DEMOLITION AND RENOVATION WORK. AFTER WORK IS COMPLETE, CEILINGS AND LIGHT FIXTURES SHALL BE REPAIRED TO AT LEAST AS GOOD A CONDITION AS BEFORE.
8. REPAIR OR REPLACE PIPE AND DUCT INSULATION DAMAGED DURING DEMOLITION OR RENOVATION TO MATCH ORIGINAL CONDITION.
9. COORDINATE ALL SHUT-DOWNS, DELIVERY AND STORAGE OF MATERIALS, ETC. WITH OWNER'S REPRESENTATIVE.
10. MECHANICAL CONTRACTOR SHALL CUT AND PATCH FINISHED AREAS AS REQUIRED BY MECHANICAL CONTRACTOR UNLESS SPECIFICALLY NOTED OTHERWISE IN DOCUMENTS.
11. CONTRACTORS SHALL PROTECT ALL EXISTING OWNER FACILITIES DURING CONSTRUCTION. ANY AND ALL OWNER FACILITIES DAMAGED OR DIS-CONNECTED BY CONTRACTOR OPERATIONS SHALL BE FULLY RESTORED TO PREVIOUS OPERATING AND APPEARANCE CONDITION BY THE CONTRACTOR.
12. FIELD VERIFY EXACT SIZES OF EXISTING PIPING AND DUCTWORK SYSTEMS SHOWN TO BE CONNECTED TO. IN THE EVENT ACTUAL SIZE IS DIFFERENT THAN SHOWN ON DRAWING, CONTACT ENGINEER FOR DIRECTION PRIOR TO ANY WORK.
13. SEE ALSO MP001 FOR ADDITIONAL GENERAL NOTES.
14. REPAIR HOLES IN WALLS AND FLOORS WHERE PIPES/DUCTS ARE REMOVED. REPAIR SHALL MATCH ADJACENT SURFACE.

DEMOLITION PLAN NOTES:

1. REMOVE HOOD, CAP 12/12 HOOD EXHAUST DUCT BELOW FLOOR ABOVE.
2. REMOVE RADIATION AND ENCLOSURE COMPLETE, CAP PIPING AS SHOWN. SAVE RADIATION AND COVERS, USE BEST PIECES TO REPLACE COVERS ON SOUTH WALL THAT WERE REMOVED TO INSTALL DOORS.
3. REMOVE CONVECTOR COMPLETE, CAP PIPING BELOW FLOOR AS SHOWN.
4. RECONNECT TO 8/6 EXHAUST DUCT BELOW FLOOR ABOVE. SEE M101.
5. REMOVE PORTION OF RADIATION AS REQUIRED FOR NEW DOOR INSTALLATION.
6. REMOVE PACKAGE TERMINAL AIR CONDITIONING UNITS AND TURN OVER TO OWNER. INFILL OPENING.

DEMOLITION LEGEND:

EXISTING WORK TO BE REMOVED

EXISTING WORK TO REMAIN

INDIANA STATE UNIVERSITY

DA #13052

R.E. Dimond and Associates, Inc.
Consulting Engineers

732 North Capitol Avenue
Indianapolis, IN 46204
Phone (317) 634-8672
Fax (317) 638-8725

UA UNIT I CHILDCARE RENOVATION
MARRIED STUDENT HOUSING

CRAWL SPACE & FIRST FLOOR - MECH. DEMOLITION

FILENAME:	
PROPERTY NO.:	
REVISIONS	
1	
2	
DATE:	05/01/2013
SCALE:	AS SHOWN
DRAWN BY:	S.D.F.
CHECKED BY:	D.E.D.
APPROVED BY:	D.E.D.
PROJECT NO.:	DA #13052

SHEET NO.:

MD101

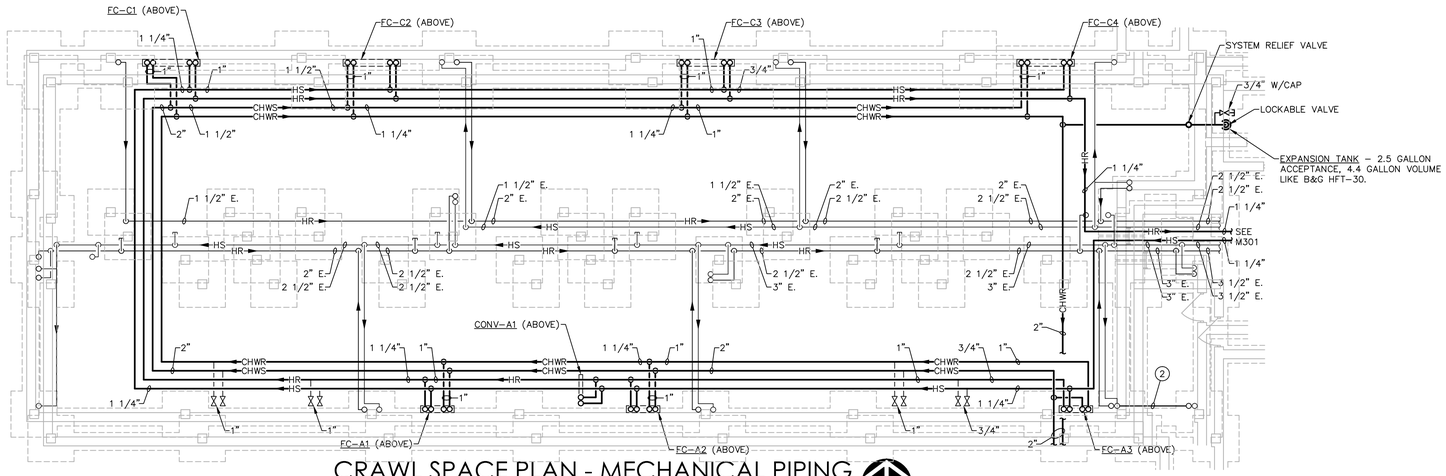

CRAWL SPACE PLAN - MECHANICAL PIPING

SCALE: 1/8" = 1'-0"

NORTH

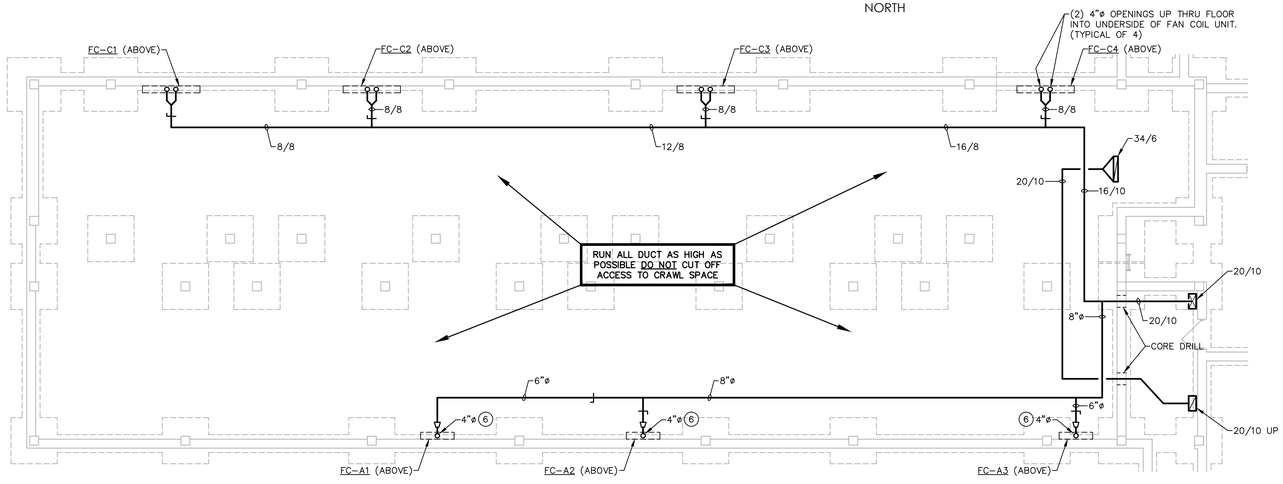

CRAWL SPACE PLAN - AIR DISTRIBUTION

SCALE: 1/8" = 1'-0"

NORTH

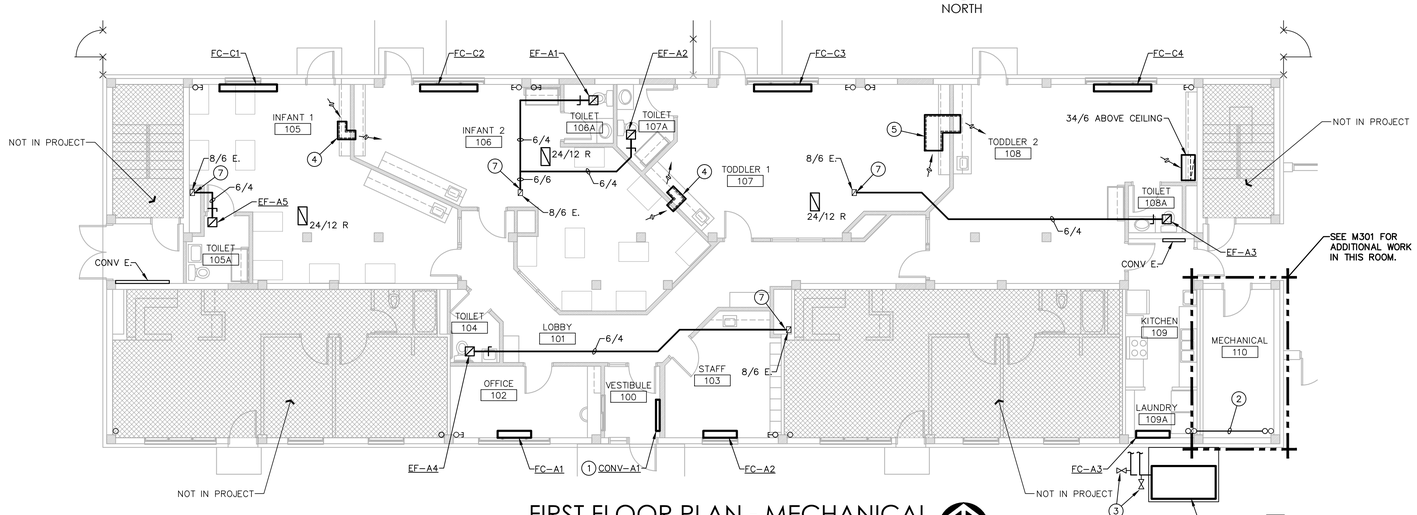

FIRST FLOOR PLAN - MECHANICAL

SCALE: 1/8" = 1'-0"

NORTH

GENERAL NOTES - HYDRONIC:

1. CONTRACTOR SHALL BE RESPONSIBLE FOR TESTING, CLEANING AND FLUSHING OF PIPING AND SYSTEMS. OWNER WILL PROVIDE AND ASSIST CONTRACTOR IN FILLING OF GLYCOL IN SYSTEM.
2. ALL BRANCH PIPING TO EQUIPMENT TO BE MINIMUM 3/4" UNLESS NOTED AS LARGER.
3. ALL FLOOR PENETRATIONS TO BE FIRE STOPPED.
4. CHILLED WATER SYSTEM WILL BE GLYCOL, PROVIDE MANUAL AIR VENTS ONLY.

GENERAL NOTES - AIR DISTRIBUTION:

1. INSTALL FIRE DAMPER AT ALL FLOOR PENETRATIONS.
2. BRANCH DUCTS TO DIFFUSERS SHALL BE 45° BOOT TAP FROM SIDE OF MAIN. SEE DETAIL.
3. PROVIDE VOLUME DAMPERS IN ALL BRANCH DUCTS TO DIFFUSERS, EXHAUST GRILLES, ETC. WHETHER SHOWN OR NOT. THESE DAMPERS ARE TO BE USED FOR SYSTEM BALANCE. DAMPERS IN DIFFUSERS, REGISTERS, ETC. SHALL NOT BE USED FOR AIR BALANCE.
4. ALL DUCT IN CRAWL SPACE SHALL BE HARD PIPE. NO FLEX DUCT. ALLOWED.
5. INSULATE ALL DUCT IN CRAWL SPACE.
6. SEE ALSO MP001 FOR ADDITIONAL NOTES.

PLAN NOTES:

1. SEMI RECESSED PIPES UP IN WALL.
2. OFFSET EXISTING PIPES IN CRAWL SPACE. RUN VERTICAL IN MECHANICAL #110 THEN OFFSET BACK TO WEST ABOVE FIRST FLOOR NEAR CEILING.
3. 1" GLYCOL FILL AND VENT CONNECTIONS.
4. 12/6 INTERNALLY LINED TRANSFER DUCT.
5. 24/6 INTERNALLY LINED TRANSFER DUCT.
6. REDUCE TO 4"ø @ FLOOR PENETRATION.
7. CONNECT TO EXISTING 8/6 EXHAUST DUCT BELOW FLOOR ABOVE.

RENOVATION LEGEND:

- NEW WORK TO BE INSTALLED
- EXISTING WORK TO REMAIN

DANIEL E. DIMOND REGISTERED No. 60910351 STATE OF INDIANA PROFESSIONAL ENGINEER

INDIANA STATE UNIVERSITY

DA #13052

R.E. Dimond and Associates, Inc. Consulting Engineers
732 North Capitol Avenue
Indianapolis, IN 46204
Phone (317) 634-4672
Fax (317) 638-8725

UA UNIT 1 CHILDCARE RENOVATION
MARRIED STUDENT HOUSING

FIRST FLOOR PLAN - MECHANICAL

FILENAME:	
PROPERTY NO.:	
REVISIONS	
1	
2	
DATE:	05/01/2013
SCALE:	AS SHOWN
DRAWN BY:	S.D.F.
CHECKED BY:	D.E.D.
APPROVED BY:	D.E.D.
PROJECT NO.:	DA #13052

SHEET NO.: M101

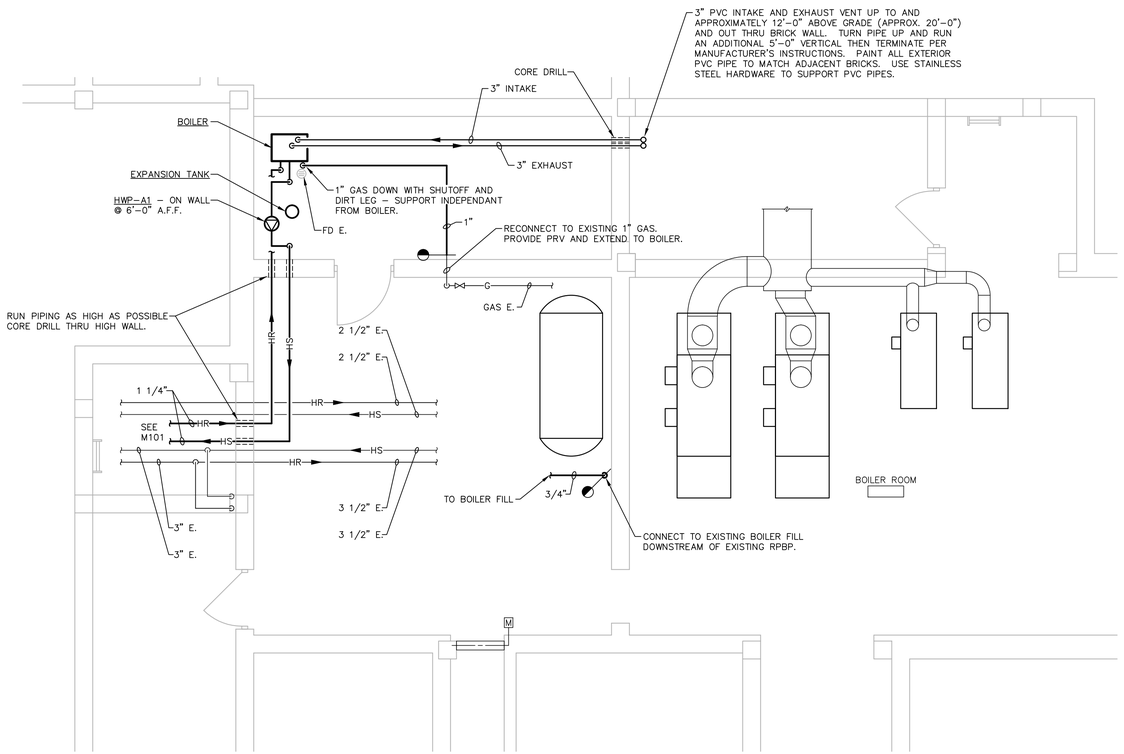

ENLARGED BOILER ROOM PLAN

SCALE: 1/4" = 1'-0"

NORTH

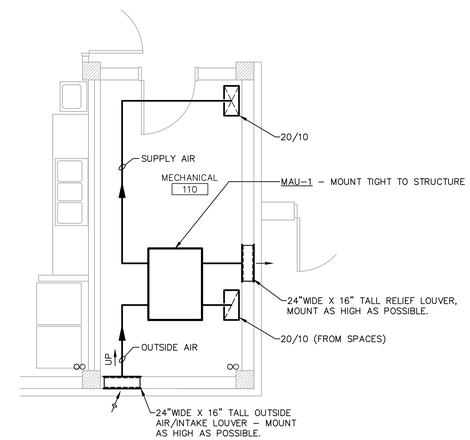

MECHANICAL ROOM PLAN

SCALE: 1/4" = 1'-0"

NORTH

DANIEL E. DIMOND
REGISTERED
No. 60910351
STATE OF INDIANA
PROFESSIONAL ENGINEER

INDIANA STATE UNIVERSITY

DA #13052

R.E. Dimond and Associates, Inc.
Consulting Engineers
732 North Capitol Avenue
Indianapolis, IN 46204
Phone (317) 634-4672
Fax (317) 638-8725

UA UNIT 1 CHILDCARE RENOVATION
MARRIED STUDENT HOUSING

ENLARGED BOILER ROOM PLAN

FILENAME:	
PROPERTY NO.:	
REVISIONS	
1	
2	
DATE:	05/01/2013
SCALE:	AS SHOWN
DRAWN BY:	S.D.F.
CHECKED BY:	D.E.D.
APPROVED BY:	D.E.D.
PROJECT NO.:	DA #13052

SHEET NO.:

M301

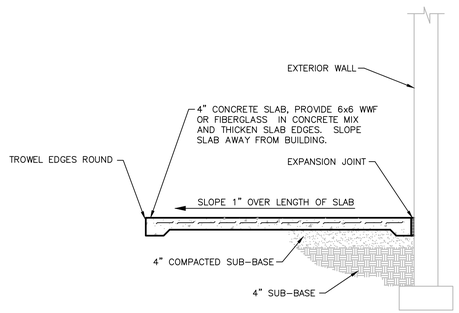

DETAIL 'C'
EXTERIOR EQUIPMENT PAD
ADJACENT TO BUILDING
NO SCALE

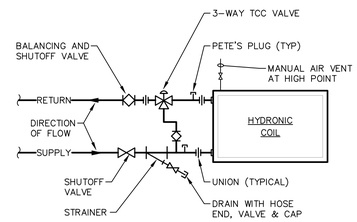

NOTE:
ALL FAN COIL VALVES AND TRIM TO BE FACTORY PIPED BY FAN COIL MANUFACTURER.

DETAIL 'B'
TERMINAL UNIT HYDRONIC COIL
PIPING WITH 3-WAY VALVE
NO SCALE

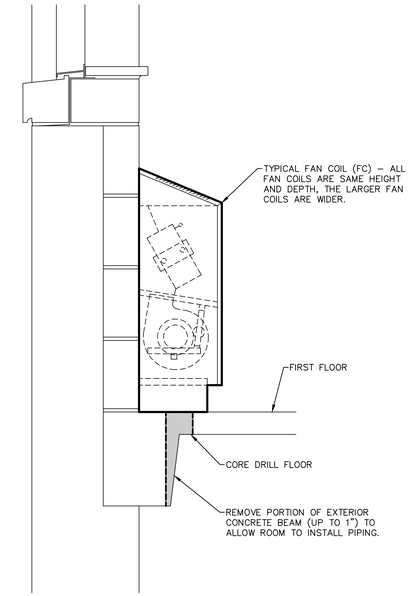

DETAIL 'A'
FAN COIL INSTALLATION
SCALE: 1 1/2"=1'-0"

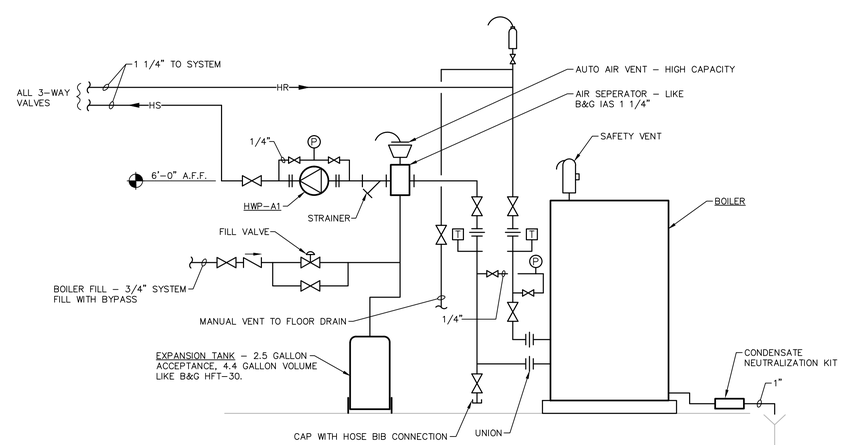

DETAIL 'D'
HEATING WATER
PIPING SCHEMATIC
NO SCALE

DANIEL E. DIMOND
REGISTERED
No. 60910351
STATE OF INDIANA
PROFESSIONAL ENGINEER

INDIANA STATE UNIVERSITY

DA #13052

R.E. Dimond and Associates, Inc.
Consulting Engineers
732 North Capitol Avenue
Indianapolis, IN 46204
Phone: (317) 634-4672
Fax: (317) 638-8725

UA UNIT I CHILDCARE RENOVATION
MARRIED STUDENT HOUSING

DETAILS - MECHANICAL

FILENAME:	
PROPERTY NO.:	
REVISIONS	
1	
2	
DATE:	05/01/2013
SCALE:	AS SHOWN
DRAWN BY:	S.D.F.
CHECKED BY:	D.E.D.
APPROVED BY:	D.E.D.
PROJECT NO.:	DA #13052

SHEET NO.:

M401

FAN COIL SCHEDULE

MARK NO.	DRAWING NAME &/ OR PURPOSE	SPECIFICATION NAME	SPECIFICATION NUMBER	MANUFACTURER AND MODEL NO.	FAN HIGH CFM / AMPS	FAN VOLTAGE	FAN HP	COOLING COIL MIN. MBH	EAT DB / WB	LAT DB / WB	CHILLED WATER EWT	CHILLED WATER LWT	WATER FLOW (GPM)	MIN. ROWS DEEP	MAX. FPI	MAX. FACE (FPM)	MAX. WPD (FT)	HEATING COIL MIN. MBH	EAT	MIN. LAT	HEATING WATER EWT	HEATING WATER LWT	WATER FLOW (GPM)	MIN. ROWS DEEP	MAX. FPI	MAX. FACE (FPM)	MAX. WPD (FT)	REMARKS
FC–A	HEATING AND COOLING FAN COIL			INTERNATIONAL FSY–03	285 / .83	120	1/30	6.7	75 / 63	55 / 54	45	55	1.4	4			10'	12.8	50	91	180	155	1.5	1			10'	DOUBLE DEFLECTION DISCHARGE GRILLE, SLOPED TOP
FC–C	HEATING AND COOLING FAN COIL			INTERNATIONAL FSY–10	885 / 2.2	120	2 @ 1/12	25	75 / 63	55 / 54	45	55	5.0	4			10'	44.2	50	96	180	155	2.0	1			10'	DOUBLE DEFLECTION DISCHARGE GRILLE, SLOPED TOP

EQUIPMENT TYPE — SIZE – TYPE
FC – FAN COIL
BC – BLOWER COIL
FC–A1 — NUMBER IDENTIFICATION

MAKE-UP AIR UNIT SCHEDULE

MARK NO.	AREA SERVED	MFG MODEL NO.	AIR VOLUME (CFM) SUPPLY	AIR VOLUME (CFM) EXHAUST	ECONOMIZER	PRE–FILTER	4" WHEEL PERFORMANCE SUMMER EAT DB / WB	SUMMER LAT DB / WB	WINTER EAT DB / WB	WINTER LAT DB / WB	PREHEAT COIL	SUPPLY FAN MOTOR ESP (IN WG.)	FAN RPM / DIA. (IN)	HP	BHP	VOLTS / PHASE	EXHAUST FAN MOTOR ESP (IN WG.)	FAN RPM / DIA. (IN)	HP	BHP	VOLTS / PHASE	WEIGHT (LB)	REMARKS
MAU–1	VENTILATION AIR	GREENHECK MINIVENT 750	800	700	N/A	Y	95.0 / 78.0	81.9 / 68.1	–2 / –2.2	46.5 / 40.3	N/A	.625	1,500	1/3	–	120 / 1	1.2	1,300	1/3	–	120 / 1	250	INDOOR INSTALLATION ERV REMOTE PANEL, WHEEL DEFROST CONTROL, HINGED ACCESS DOORS EXHAUST FAN TO HAVE SPEED CONTROLLER.
							WHEEL PERFORMANCE CONDITIONS BASED ON INDOOR CONDITIONS: 75.0F/62.4F SUMMER 72.0F/55.7F WINTER																

AIR COOLED PACKAGED CHILLER SCHEDULE

MARK NO.	SPECIFICATION NAME	MANUFACTURER AND MODEL NO.	TOTAL CAPACITY	EVAPORATOR GPM	EWT °F / LWT °F	PASS	MAX. PRESS. DROP	STAGES/ UNLOADING	# CIRCUITS	EXP. VA.	METERING ORIFICE	COMPRESSORS QUANTITY	TYPE	PERFORMANCE @ 95°F AMB TONS	KW	EER	REFRIG.	WEIGHT LBS. DRY	WET	ELECTRICAL DATA MCA	VOLT	PH	REMARKS
CHILLER–1	PACKAGED CHILLER	AAON LC–008–0	8 TONS	19	43.3 / 54		11.4'	10% TO 100%	2			2	SCROLL		9.15	10.47	R410A	1,530	1,580	73	208	1ø	COMPLETE SELF CONTAINED PACKAGED AIR COOLED CHILLER INCLUDING PUMPS, DESIGNED FOR CONSTANT PRIMARY/VARIABLE SECONDARY PUMPING. CAPACITY FOR 30% PROPEYLENE GLYCOL. LOW AMBIENT OPERATION DOWN TO 40°F, 115V OUTLET, PAINTED DARK BRONZE WITH KYNAR PAINT, DESIGNED TO SIT ON CONCRETE PAD.

GAS FIRED HOT WATER BOILER SCHEDULE

MARK NO.	SPECIFICATION NAME	SPECIFICATION NUMBER	MANUFACTURER & MODEL	FUEL	MBH INPUT	MBH OUTPUT	EWT °F / LWT °F	WATER FLOW (GPM)	MAX WPD. (FT)	WEIGHT LBS.	MOTOR DATA HP	VOLTS	PH.	REMARKS
BOILER			HTP ELITE EL–150	GAS	150	137	155 / 180	12.5	17'	126		120	1ø	STAINLESS STEEL CONDENSING BOILER, POWER DIRECT VENTING WITH PVC, INTEGRATED MICROPROCESSOR CONTROLS WITH TEXT DISPLAY, FULLY MODULATING FROM 10% TO 100% CAPACITY, REMOTE AMBIENT TEMPERATURE SENSOR TO BE INCLUDED AND INSTALLED, COMPLETE AMBIENT RESET SCHEDULE, 180°F. @ 15°F. AMBIENT AND 80°F. @ 70°F. AMBIENT, SPARK IGNITION, SUPPLY & RETURN TEMPERATURE SENSORS, CONDENSATE NEUTRALIZATION KIT, FLOW SWITCH, TEMPERATURE PRESSURE RELIEF VALVE, AND VENT TERMINATION KIT.

PUMP SCHEDULE

MARK NO.	DRAWING NAME AND/OR PURPOSE	SPECIFICATION NAME	MANUFACTURER AND MODEL NO.	FLUID	GPM	FT. HD. WTR.	EFF. %	IMP. DIA.	SUCTION	DISCHARGE	WT.	MOTOR DATA HP	BHP	RPM	VOLTS	PH.	VFD	REMARKS
HWP–A	HEATING WATER PUMP		BELL & GOSSETT SERIES 90 – 1 1/2A	WATER	12	55'	–	–	1/2	1/2	–	1.0	.6	1750	208	1ø	NO	–

FAN SCHEDULE

MARK NO.	DRAWING NAME &/ OR PURPOSE	SPECIFICATION NAME	MANUFACTURER & MODEL	OPERATING DATA CFM	TIP SPEED (FPM)	TOT. S.P.	RPM	WATTS	SONES	DRIVE	WHEEL DIA.	MOTOR DATA KW	VOLT	PH.	WT. LBS.	REMARKS
EF–A	EXHAUST FAN		GREENHECK SP–B70	70		.1"	675	45	1.4	DIRECT		.045	120	1ø	9	CEILING POWERED EXHAUST FAN WITH INTEGRAL EXHAUST REGISTER.

HOT WATER CONVECTOR SCHEDULE

MARK NO.	SPECIFICATION NAME	MANUFACTURER & MODEL	HEATING DATA MBH	W.P.D. (FT.)	E.W.T. (°F)	L.W.T. (°F)	E.A.T. (°F)	ENCLOSURE HEIGHT (IN.)	WIDTH (IN.)	DEPTH (IN.)	RECESSED DEPTH (IN.)	REMARKS
CONV–A1		STERLING PW–A	1.6	10'	180	160	65	24	36	4 1/4	2 1/4	PROVIDE WITH DANFOSS SELF CONTAINED CONTROL VALVE, SEMI–RECESSED 2" INTO WALL, EXTENDS 2 1/4" INTO SPACE. ACCESS DOOR FOR VALVE ACCESS, STANDARD COLOR

DANIEL E. DIMOND REGISTERED No. 60910351 STATE OF INDIANA PROFESSIONAL ENGINEER

INDIANA STATE UNIVERSITY

DA #13052

R.E. Dimond and Associates, Inc.
Consulting Engineers
732 North Capitol Avenue
Indianapolis, IN 46204
Phone (317) 634-8672
Fax (317) 638-8725

UA UNIT I CHILDCARE RENOVATION
MARRIED STUDENT HOUSING

SCHEDULES - MECHANICAL

FILENAME:	
PROPERTY NO.:	
REVISIONS	
1	
2	
DATE:	05/01/2013
SCALE:	AS SHOWN
DRAWN BY:	S.D.F.
CHECKED BY:	D.E.D.
APPROVED BY:	D.E.D.
PROJECT NO.:	DA #13052

SHEET NO.:

M601

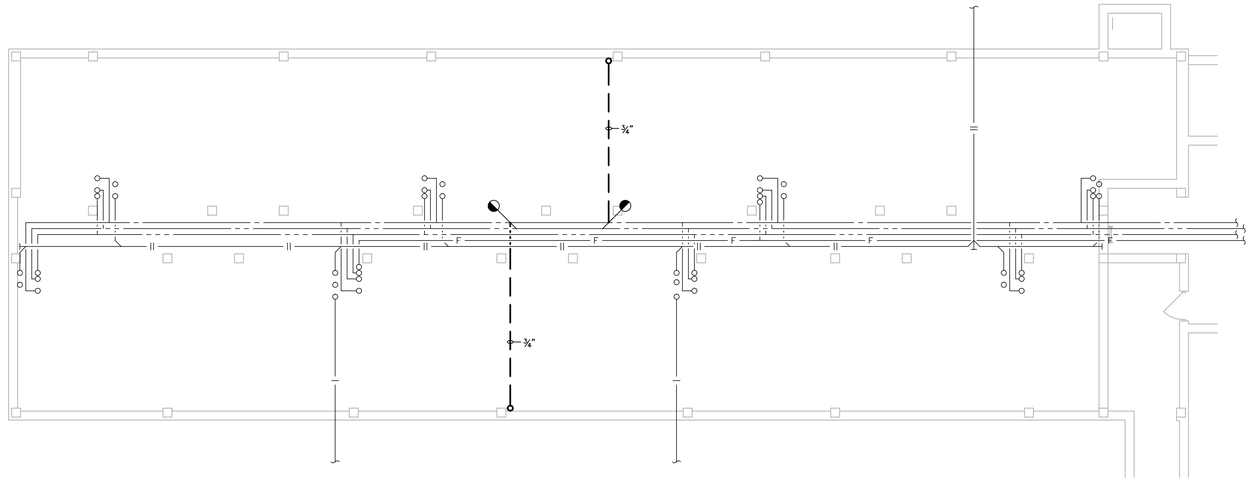

CRAWL SPACE PLAN - PLUMBING DEMOLITION

SCALE: 1/8" = 1'-0"

NORTH

GENERAL NOTES:

1. THESE NOTES APPLY TO ALL 'P' AND 'PD' SERIES DRAWINGS.
2. ALL UNDERLINED EQUIPMENT IS SCHEDULED. SEE P600 SERIES DRAWINGS FOR SCHEDULES.
3. SEE DRAWING MP001 FOR SYMBOLS AND ABBREVIATIONS.
4. CONTRACTOR SHALL COORDINATE WORK WITH ALL OTHER TRADES PRIOR TO INSTALLATION. CONTACT ENGINEER WITH CONFLICTS OR DISCREPANCIES.
5. PROVIDE SLEEVES FOR ALL PIPING THAT PENETRATES FULL HEIGHT WALLS, WHETHER SHOWN OR NOT.
6. CONTRACTOR SHALL BE RESPONSIBLE FOR CORE DRILLING AND CUTTING HOLES THRU WALLS AND FLOORS AS REQUIRED TO INSTALL NEW PIPING WHETHER SHOWN OR NOT.
7. ALL FLOOR PENETRATIONS TO BE FIRE STOPPED.
8. INSULATE ALL PLASTIC PIPING IN RETURN AIR PLENUMS TO MAINTAIN 25/50 FIRE SMOKE RATING AND AS DIRECTED IN SPEC SECTION 200180.
9. ALL PLUMBING SYSTEMS TO BE INSTALLED TO MEET THE REQUIREMENTS OF INDIANA PLUMBING CODE, 2012 (INTERNATIONAL PLUMBING CODE, 2006 WITH INDIANA AMENDMENTS).
10. PIPE ROUTINGS INDICATED ON DRAWINGS ARE DIAGRAMMATIC AND ARE A SUGGESTED METHOD FOR DESIGN. CONTRACTOR SHALL BE RESPONSIBLE FOR FINAL COORDINATION, LAYOUT, CODE COMPLIANCE, AND DESIGN.
11. ALL NEW WORK IS DRAWN DARK. ALL WORK DRAWN LIGHT AND FOLLOWED BY (E.) IS EXISTING.
12. CONTRACTOR SHALL FIELD VERIFY EXISTING PIPE AND EQUIPMENT SIZES, LOCATIONS, ELEVATIONS, MATERIALS, ETC. BEFORE BIDDING OR BEGINNING WORK.
13. CONTRACTOR SHALL COORDINATE SHUT DOWN OF ANY MECHANICAL SYSTEM WITH THE OWNER, OCCUPANTS OF THE AFFECTED AREA, AND ANY OTHER AUTHORITY HAVING JURISDICTION.
14. PROVIDE TEMPORARY CAPS FOR ALL SERVICES AS REQUIRED SO EXISTING SYSTEMS WILL REMAIN OPERATIONAL.
15. CONTRACTORS SHALL PROTECT ALL EXISTING OWNER FACILITIES DURING CONSTRUCTION. ANY FACILITY DAMAGED OR DISCONNECTED BY CONTRACTOR OPERATIONS SHALL BE FULLY RESTORED TO PREVIOUS OPERATING AND APPEARANCE CONDITION.
16. REPAIR OR REPLACE PIPE INSULATION DAMAGED DURING DEMOLITION OR RENOVATION WORK TO MATCH ORIGINAL CONDITION.
17. REMOVE ALL PIPING, VALVES, ETC. MADE OBSOLETE AS A RESULT OF NEW CONSTRUCTION.
18. THOROUGHLY REVIEW ALL DRAWINGS PRIOR TO ANY DEMOLITION WORK. ANY DEVICES REMOVED ACCIDENTALLY WILL BE REPLACED AT NO ADDITIONAL COST TO OWNER.
19. DISPOSAL OF DEMOLISHED MATERIALS SHALL COMPLY WITH ALL LOCAL, STATE, AND FEDERAL REGULATIONS.
20. SMOKING, ALCOHOL, DRUGS AND CONTRABAND ARE STRICTLY FORBIDDEN ON OWNERS PROPERTY.
21. PIPING SUPPLIES TO FIXTURES ARE SAME SIZE AS INDICATED IN ROUGH-IN SCHEDULE UNLESS OTHERWISE NOTED ON DRAWINGS.

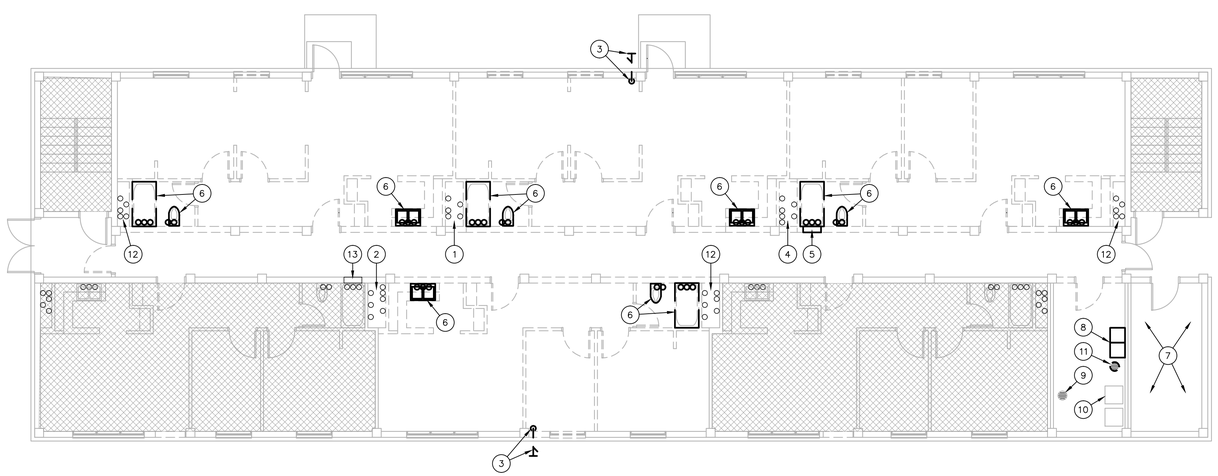

FIRST FLOOR PLAN - PLUMBING DEMOLITION

SCALE: 1/8" = 1'-0"

NORTH

DEMOLITION PLAN NOTES:

1. PREP 2" COLD WATER RISER, 1" HOT WATER RISER, 1/2" HOT WATER RETURN RISER, 3" WASTE STACK, AND 3" VENT STACK FOR OFFSET INTO NEW FIRST FLOOR CHASE. REFER TO DRAWING P101 FOR ADDITIONAL REQUIREMENTS.
2. PREP 2" COLD WATER RISER, 1" HOT WATER RISER, 1/2" HOT WATER RETURN RISER, 4" FIRE RISER, 3" WASTE STACK, 3" VENT STACK, AND 4" STORM CONDUCTOR FOR OFFSET INTO NEW FIRST FLOOR CHASE. REFER TO DRAWING P101 FOR ADDITIONAL REQUIREMENTS.
3. REMOVE WALL HYDRANT AND ASSOCIATED PIPING COMPLETE. PATCH EXTERIOR WALL TO MATCH EXISTING.
4. PREP 2" COLD WATER RISER, 1" HOT WATER RISER, 1/2" HOT WATER RETURN RISER, 4" FIRE RISER, 3" WASTE STACK, AND 3" VENT STACK FOR OFFSET INTO NEW FIRST FLOOR CHASE. REFER TO DRAWING P101 FOR ADDITIONAL REQUIREMENTS.
5. DISCONNECT AND RELOCATE FIRE HOSE CABINET. REMOVE ASSOCIATED SUPPLY PIPING BACK TO FIRE RISER.
6. REMOVE PLUMBING FIXTURE, TRIM, AND ALL ASSOCIATED WATER, WASTE, AND VENT PIPING BACK TO RISERS/STACKS COMPLETE. CUT AND PATCH WALL/FLOOR (AS REQUIRED) TO MATCH EXISTING.
7. PLUMBING FIXTURES AND PIPING IN THIS ROOM TO REMAIN.
8. DISCONNECT AND REMOVE LAUNDRY TUB. WATER, WASTE, AND VENT ROUGH-INS TO REMAIN.
9. FLOOR DRAIN TO REMAIN.
10. WATER, WASTE, AND VENT ROUGH-INS FOR CLOTHES WASHER TO REMAIN.
11. REMOVE FLOOR DRAIN AND ASSOCIATED WASTE PIPING COMPLETE. CUT AND PATCH FLOOR TO MATCH EXISTING.
12. STACKS AND RISERS IN THIS CHASE TO REMAIN.
13. FIRE HOSE CABINET TO REMAIN.

DEMOLITION LEGEND:

EXISTING WORK TO BE REMOVED

EXISTING WORK TO REMAIN

DANIEL E. DIMOND
REGISTERED
No. 60910351
STATE OF INDIANA
PROFESSIONAL ENGINEER

INDIANA STATE UNIVERSITY

DA #13052

R.E. Dimond and Associates, Inc.
Consulting Engineers
732 North Capitol Avenue
Indianapolis, IN 46204
Phone: (317) 638-4672
Fax: (317) 638-8725

UA UNIT I CHILDCARE RENOVATION
MARRIED STUDENT HOUSING

FLOOR PLANS - PLUMBING DEMOLITION

FILENAME:	
PROPERTY NO.:	
REVISIONS	
1	
2	
DATE:	05/01/2013
SCALE:	AS SHOWN
DRAWN BY:	M.B.W.
CHECKED BY:	M.B.W.
APPROVED BY:	D.E.D.
PROJECT NO.:	DA #13052

SHEET NO.:

PD101

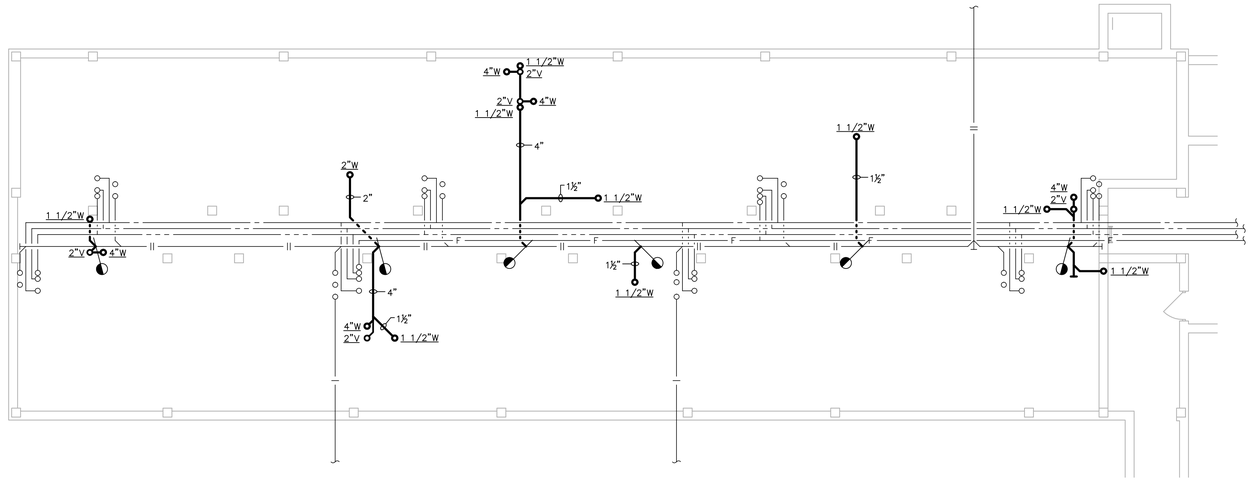

CRAWL SPACE PLAN - PLUMBING

SCALE: 1/8" = 1'-0"

NORTH

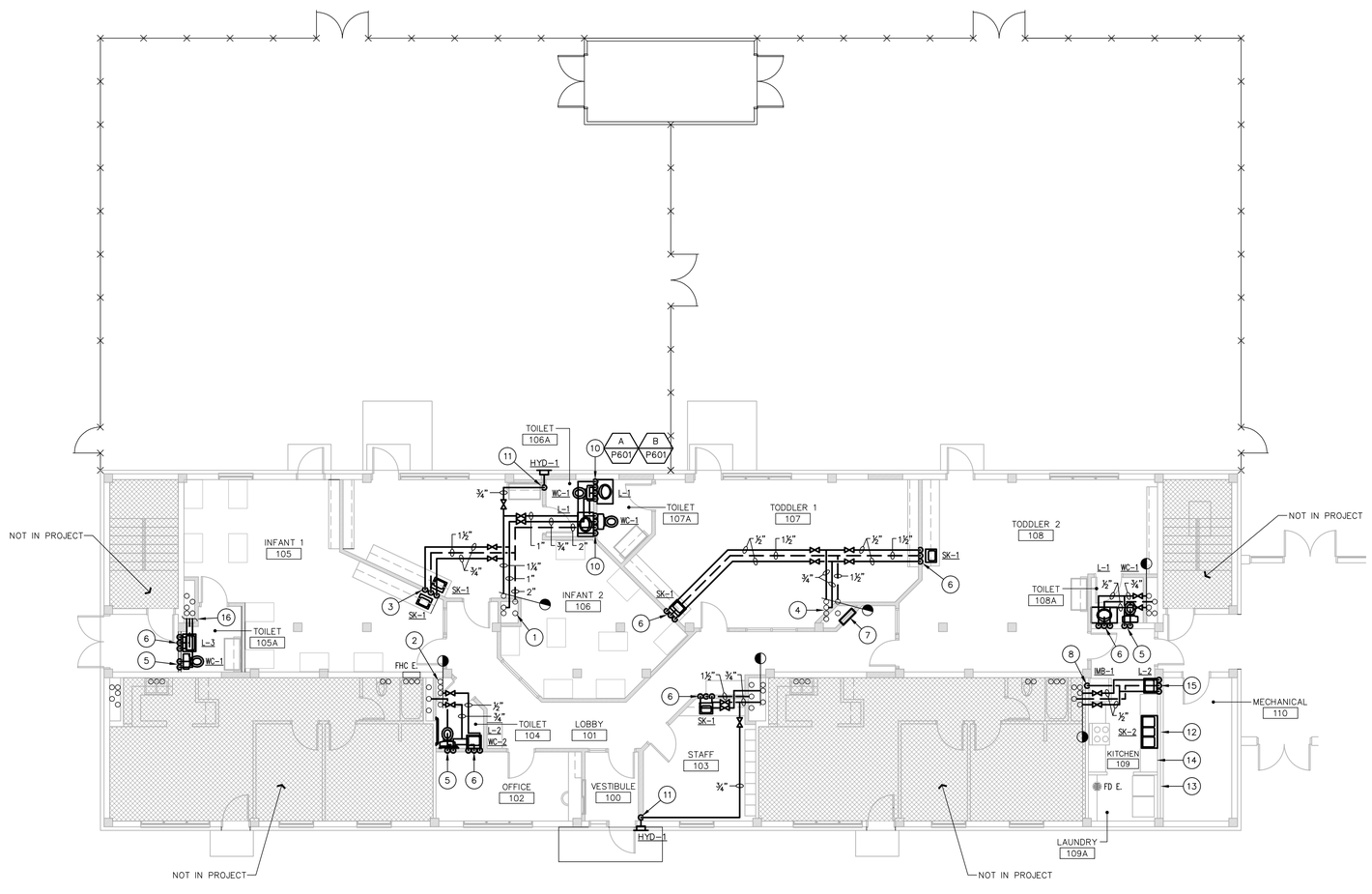

FIRST FLOOR PLAN - PLUMBING

SCALE: 1/8" = 1'-0"

NORTH

GENERAL NOTES:

1. REFER TO DRAWING PD101 FOR GENERAL NOTES.

PLAN NOTES:

1. OFFSET 2" COLD WATER RISER, 1" HOT WATER RISER, 1/2" HOT WATER RETURN RISER, 3" WASTE STACK, AND 3" VENT STACK INTO NEW FIRST FLOOR CHASE. INTERCEPT PIPING IN CRAWL SPACE BELOW AND RE-CONNECT TO EXISTING ABOVE FIRST FLOOR CEILING.
2. OFFSET 2" COLD WATER RISER, 1" HOT WATER RISER, 1/2" HOT WATER RETURN RISER, 4" FIRE RISER, 3" WASTE STACK, 3" VENT STACK, AND 4" STORM CONDUCTOR INTO NEW FIRST FLOOR CHASE. INTERCEPT PIPING IN CRAWL SPACE BELOW AND RE-CONNECT TO EXISTING ABOVE FIRST FLOOR CEILING.
3. 3/4" HOT AND COLD WATER, 2" WASTE, 1 1/2" VENT.
4. OFFSET 2" COLD WATER RISER, 1" HOT WATER RISER, 1/2" HOT WATER RETURN RISER, 4" FIRE RISER, 3" WASTE STACK, AND 3" VENT STACK INTO NEW FIRST FLOOR CHASE. INTERCEPT PIPING IN CRAWL SPACE BELOW AND RE-CONNECT TO EXISTING ABOVE FIRST FLOOR CEILING.
5. 1/2" COLD WATER, 4" WASTE, 2" VENT.
6. 1/2" HOT AND COLD WATER, 1 1/2" WASTE, 1 1/2" VENT.
7. RELOCATE FIRE HOSE CABINET TO THIS LOCATION.
8. 1/2" COLD WATER. CUT AND PATCH WALL TO MATCH EXISTING.
9. 1/2" HOT AND COLD WATER, 2" WASTE STANDPIPE, 1 1/2" VENT.
10. 3/4" COLD WATER, 1/2" HOT WATER, 1 1/2" WASTE, 1 1/2" VENT, 4" WASTE, 2" VENT.
11. 3/4" COLD WATER.
12. CONNECT SINK TO EXISTING WATER, WASTE, AND VENT ROUGH-INS. RE-WORK AS REQUIRED.
13. CONNECT OWNER FURNISHED CLOTHES WASHER TO EXISTING WATER, WASTE, AND VENT ROUGH-INS. RE-WORK AS REQUIRED.
14. EXTEND 3/8" HOT WATER FROM SINK ROUGH-IN TO DISHWASHER. PROVIDE ISOLATION SHUTOFF VALVE. CONNECT DISHWASHER DRAIN TO GARBAGE DISPOSER (GD-1).
15. 1/2" HOT AND COLD WATER, 1 1/2" WASTE, 1 1/2" VENT. CUT AND PATCH WALL TO MATCH EXISTING.
16. EXTEND 3/4" COLD WATER, 1/2" HOT WATER, 2" VENT FROM EXISTING RISERS AND STACKS IN CHASE. PROVIDE SHUTOFF VALVES ON WATER SUPPLIES. ROUTE PIPING TIGHT TO BOTTOM OF BEAM. COORDINATE INSTALLATION WITH BULKHEAD.

RENOVATION LEGEND:

- NEW WORK TO BE INSTALLED
- EXISTING WORK TO REMAIN

DANIEL E. DIMOND
REGISTERED
No. 60910351
STATE OF INDIANA
PROFESSIONAL ENGINEER

INDIANA STATE UNIVERSITY

DA #13052

R.E. Dimond and Associates, Inc.
Consulting Engineers
732 North Capitol Avenue
Indianapolis, IN 46204
Phone: (317) 638-4672
Fax: (317) 638-8725

UA UNIT 1 CHILDCARE RENOVATION
MARRIED STUDENT HOUSING

FLOOR PLANS - PLUMBING

FILENAME:	
PROPERTY NO.:	
REVISIONS	
1	
2	
DATE:	05/01/2013
SCALE:	AS SHOWN
DRAWN BY:	S.D.F.
CHECKED BY:	D.E.D.
APPROVED BY:	D.E.D.
PROJECT NO.:	DA #13052

SHEET NO.: P101

FIXTURE ROUGH-IN SCHEDULE & MOUNTING HEIGHTS

MARK NO.	FIXTURE DESCRIPTION	HW	CW	TRAP	W	V	MOUNTING HEIGHT
WC-1	WATER CLOSET – FLOOR MOUNTED, TANK TYPE	–	1/2"	INTEGRAL	4"	2"	10" TO SEAT
WC-2	WATER CLOSET – FLOOR MOUNTED, TANK TYPE, ADA	–	1/2"	INTEGRAL	4"	2"	17" TO SEAT
L-1	LAVATORY – COUNTERTOP	1/2"	1/2"	1 1/4"	1 1/2"	1 1/2"	MOUNT SINK IN COUNTERTOP
L-2	LAVATORY – WALL HUNG, ADA	1/2"	1/2"	1 1/4"	1 1/2"	1 1/2"	34" TO DECK
L-3	LAVATORY – WALL HUNG	1/2"	1/2"	1 1/4"	1 1/2"	1 1/2"	24" TO DECK
SK-1	SINK – ONE COMPARTMENT	1/2"	1/2"	1 1/2"	1 1/2"	1 1/2"	MOUNT SINK IN COUNTERTOP
SK-2	SINK – THREE COMPARTMENT WITH DISPOSER	(2) 1/2"	(2) 1/2"	1 1/2"	1 1/2"	1 1/2"	MOUNT SINK IN COUNTERTOP
IMB-1	ICE MAKER BOX	–	1/2"	–	–	–	24"
HYD-1	WALL HYDRANT	–	3/4"	–	–	–	18" ABOVE ADJACENT GRADE

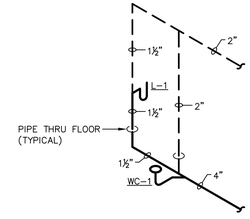

DETAIL 'A'
WASTE AND VENT PIPING
NO SCALE

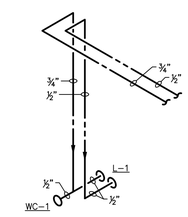

DETAIL 'B'
HOT AND COLD WATER PIPING
NO SCALE

DANIEL E. DIMOND
REGISTERED
No. 60910351
STATE OF
INDIANA
PROFESSIONAL ENGINEER

INDIANA STATE UNIVERSITY

DA #13052

R.E. Dimond and Associates, Inc.
Consulting Engineers
732 North Capitol Avenue
Indianapolis, IN 46204
Phone: (317) 634-4672
Fax: (317) 638-8725

UA UNIT I CHILDCARE RENOVATION
MARRIED STUDENT HOUSING

SCHEDULES AND DETAILS - PLUMBING

FILENAME:	
PROPERTY NO.:	
REVISIONS	
1	
2	
DATE:	05/01/2013
SCALE:	AS SHOWN
DRAWN BY:	S.D.F.
CHECKED BY:	D.E.D.
APPROVED BY:	D.E.D.
PROJECT NO.:	DA #13052

SHEET NO.:

P601

ELECTRICAL ABBREVIATIONS

A	AMPERE
A/C	AIR–CONDITIONING
AC	ALTERNATING CURRENT; ARMORED CABLE
ADJ	ADJUSTABLE
AF	AMPERE FUSE; AMPERE FRAME
AFF	ABOVE FINISHED FLOOR
AFG	ABOVE FINISHED GRADE
AHU	AIR HANDLING UNIT
AIC	AMPERE INTERRUPTING CAPACITY
AL	ALUMINUM
ALT	ALTERNATE
ALUM	ALUMINUM
AMP	AMPERE
ANSI	AMERICAN NATIONAL STANDARDS INSTITUTE
AP	ACCESS PANEL
APPROX	APPROXIMATE
ARCH	ARCHITECT
ASYM	ASYMMETRICAL
AT	AMPERE TRIP
ATS	AUTOMATIC TRANSFER SWITCH
AUX	AUXILIARY
AVG	AVERAGE
AWG	AMERICAN WIRE GAUGE
BATT	BATTERY
BD	BOARD
BFG	BELOW FINISHED GRADE
BLDG	BUILDING
BPS	BOLTED PRESSURE SWITCH
BR	BRANCH
BRKR	BREAKER
C	CONDUIT; CENTIGRADE
C/C	CENTER TO CENTER
CAB	CABINET
CAP	CAPACITY
CB	CIRCUIT BREAKER
CCTV	CLOSED CIRCUIT TELEVISION
CD	CANDELA; CLOTHES DRYER
CF	CUBIC FEET; COMPACT FLUORESCENT
CHW	CHILLED WATER
CHWP	CHILLED WATER PUMP
CIP	CAST IN PLACE
CIR	CIRCUIT
CKT	CIRCUIT
CLF	CURRENT LIMITING FUSE
CLG	COOLING; CEILING
CM	CONSTRUCTION MANAGER
CMU	CONCRETE MASONRY UNIT
CO	CENTRAL OFFICE
COGB	CENTRAL OFFICE GROUND BAR
COL	COLUMN
COMB	COMBINATION
COMPR	COMPRESSOR
CONC	CONCRETE
COND	CONDENSATE; CONDUCTOR
CONT	CONTINUOUS; CONTINUED; CONTRACTOR
CP	CONTROL PANEL
CPT	CONTROL POWER TRANSFORMER
CSAC	CENTRAL STATION AIR CONDITIONER
CT	CURRENT TRANSFORMER
CU	COPPER; CUBIC
CU FT	CUBIC FOOT
CUH	CABINET UNIT HEATER
CW	COOL WHITE; COLD WATER; CLOTHES WASHER
CY	CUBIC YARD
CYL	CYLINDER
D	DEEP; DEPTH; DISCHARGE
DB	DECIBEL; DIRECT BURIED
DC	DIRECT CURRENT
DDC	DIRECT DIGITAL CONTROL
DF	DRINKING FOUNTAIN
DHW	DOMESTIC HOT WATER
DIA	DIAMETER
DIAG	DIAGONAL
DIAM	DIAMETER
DIFF	DIFFUSER
DISC	DISCONNECT
DIST	DISTRIBUTION
DN	DOWN
DP	DUSTPROOF; DOUBLE POLE
DPDT	DOUBLE POLE, DOUBLE THROW
DPST	DOUBLE POLE, SINGLE THROW
DT	DUSTTIGHT; DOUBLE THROW
DW	DISHWASHER
DWG	DRAWING
DX	DIRECT EXPANSION
E	EQUIPMENT ONLY; EAST; ELECTRICAL; EXISTING
EA	EACH
EBBR	ELECTRIC BASEBOARD RADIATION
EB	ELECTRONIC BALLAST
EC	ELECTRICAL CONTRACTOR
EF	EXHAUST FAN
EGC	EQUIPMENT GROUNDING CONDUCTOR
EIFS	EXTERIOR INSULATION FINISH SYSTEM
ELECT	ELECTRICIAN; ELECTRICAL; ELECTRONIC
ELEV	ELEVATOR; ELEVATION
EM	EMERGENCY
EMERG	EMERGENCY
EMS	ENERGY MANAGEMENT SYSTEM
EMT	ELECTRICAL METALLIC TUBING
ENCL	ENCLOSURE
ENG	ENGINE; ENGINEERED
ENGR	ENGINEER
EP	EXPLOSIONPROOF; ELECTRIC–PNEUMATIC
EQUIP	EQUIPMENT
ER	EXISTING TO REMAIN
ES	ENERGY SAVER
EST	ESTIMATED
EWC	ELECTRIC WATER COOLER
EWH	ELECTRIC WATER HEATER
EX	EXISTING
EXCAV	EXCAVATION
EXIST	EXISTING
EXH	EXHAUST
EXP	EXPOSED
EXR	EXISTING RELOCATED
EXT	EXTERIOR
EXTG	EXISTING
F	FUSED; FAHRENHEIT
FA	FIRE ALARM
FAAP	FIRE ALARM ANNUNCIATOR PANEL
FACP	FIRE ALARM CONTROL PANEL
FC	FOOT–CANDLE
FCU	FAN COIL UNIT
FD	FUSED DISCONNECT
FDR	FEEDER
FEP	FLUORINATED ETHYLENE PROPYLENE
FFEC	FOODSERVICE FACILITIES EQUIPMENT CONTRACTOR
FIG	FIGURE
FIN	FINISHED
FIXT	FIXTURE
FLA	FULL LOAD AMPS
FLR	FLOOR
FLUOR	FLUORESCENT
FM	FREQUENCY MODULATION; FACTORY MUTUAL
FPM	FEET PER MINUTE
FR	FIRE RATING
FT	FOOT; FEET
FTG	FITTING; FOOTING
FURN	FURNISHED
FVNR	FULL VOLTAGE NON–REVERSING
G	GROUND
GA	GAUGE
GAL	GALLON
GALV	GALVANIZED
GC	GENERAL CONTRACTOR
GEN	GENERAL; GENERATOR
GFCI	GROUND FAULT CIRCUIT INTERRUPTER
GFI	GROUND FAULT INTERRUPTER
GFP	GROUND FAULT PROTECTOR
GND	GROUND
GP	GENERAL PURPOSE
GPM	GALLONS PER MINUTE
GRC	GALVANIZED RIGID CONDUIT
GRD	GROUND; GROUNDED
GRS	GALVANIZED RIGID STEEL
H	HIGH
HACR	HEATING, AIR CONDITIONING & REFRIGERATION
HD	HEAVY DUTY
HG	MERCURY
HH	HAND HOLE
HIC	HIGH INTERRUPTING CAPACITY
HO	HIGH OUTPUT
HOA	HAND–OFF–AUTOMATIC
HORIZ	HORIZONTAL
HP	HORSEPOWER; HIGH PRESSURE
HPF	HIGH POWER FACTOR
HPS	HIGH PRESSURE SODIUM
HR	HOUR
HRS/DAY	HOURS PER DAY
HSC	HIGH SHORT CIRCUIT
HT	HEIGHT
HTG	HEATING
HTRS	HEATERS
HV	HIGHT VOLTAGE
HVAC	HEATING, VENTILATION & AIR–CONDITIONING
HW	HOT WATER; HEAVY WALL
HWP	HEATING WATER PUMP
HYD	HYDRAULIC
HZ	HERTZ
IC	INTERRUPTING CAPACITY
ID	INSIDE DIAMETER
IDF	INTERMEDIATE DISTRIBUTION FRAME
IEEE	INSTITUTE OF ELECTRICAL & ELECTRONICS ENGINEERS
IF	INSIDE FROSTED
IG	ISOLATED GROUND
IMC	INTERMEDIATE METAL CONDUIT
IMP	IMPEDANCE
IN	INCH
INCAND	INCANDESCENT
INCL	INCLUDED; INCLUDING
INST	INSTALLATION
INSUL	INSULATION; INSULATED
INT	INTERIOR; INTERNAL
INV EL	INVERT ELEVATION
IS	INSTANT START
J	JOULE; JUNCTION
JB	JUNCTION BOX
J–BOX	JUNCTION BOX
K	THOUSAND
KCMIL	THOUSAND CIRCULAR MILS
KEC	KITCHEN EQUIPMENT CONTRACTOR
KHZ	KILOHERTZ
KK	KIRK KEY
KP	KEYPAD
KV	KILOVOLT
KVA	KILOVOLT AMPERE
KVAR	KILOVOLT AMPERE REACTIVE
KW	KILOWATT
KWH	KILOWATT–HOUR
L	LENGTH; LONG
LAB	LABOR; LABORATORY
LB	POUND; ELL CONDUIT BODY
LEC	LABORATORY EQUIPMENT COMPANY (CONTRACTOR)
LED	LIGHT EMITTING DIODE
LF	LINEAR FOOT
LG	LONG; LENGTH; LARGE
LLD	LAMP LUMEN DEPRECIATION
LM	LUMEN
LO	LOCKOUT
LP	LIGHTING PANEL
LPF	LOW POWER FACTOR
LRA	LOCKED ROTOR AMPS
LT	LIGHT; LIQUID–TIGHT
LTG	LIGHTING
LTR	LETTER
LV	LOW VOLTAGE
M	THOUSAND; MATERIAL; MECHANICAL; METER
MA	MILLIAMPERE
MACH	MACHINE
MAG STR	MAGNETIC STARTER
MAINT	MAINTENANCE
MAN	MANUAL
MAT	MATERIAL
MATV	MASTER ANTENNA TELEVISION
MAX	MAXIMUM
MC	METAL CLAD CABLE; MECHANICAL CONTRACTOR; MOTOR CONTROLLER
MCA	MINIMUM CIRCUIT AMPS
MCB	MAIN CIRCUIT BREAKER
MCC	MOTOR CONTROL CENTER
MCCB	MOLDED CASE CIRCUIT BREAKER
MCM	THOUSAND CIRCULAR MILS
MCP	MOTOR CIRCUIT PROTECTOR
MCS	MOTOR CIRCUIT SWITCH
MDF	MAIN DISTRIBUTION FRAME
MDP	MAIN DISTRIBUTION PANELBOARD
MECH	MECHANICAL
MED	MEDIUM
MFG	MANUFACTURING
MFR	MANUFACTURER
MH	MANHOLE; METAL HALIDE; MAN–HOUR
MHZ	MEGAHERTZ
MI	MALLEABLE IRON; MINERAL INSULATED
MIC	MICROPHONE
MIN	MINIMUM; MINUTE
MISC	MISCELLANEOUS
MLO	MAIN LUG ONLY
MO	MONTH
MOBIL	MOBILIZATION
MOCP	MAXIMUM OVERCURRENT PROTECTION
MOG	MOGUL
MTD	MOUNTED
MTG	MOUNTING
MTS	MANUAL TRANSFER SWITCH
MULT	MULTI; MULTIPLY
MV	MERCURY VAPOR, MEGAVOLT; MEDIUM VOLTAGE
MVA	MEGAVOLT AMPERES
MVAR	MEGAVOLT AMPERES REACTIVE
MW	MEGAWATT
N	NORTH; NEW; NEUTRAL
N/A	NOT AVAILABLE; NOT APPLICABLE
NA	NON–AUTOMATIC
NAT	NATURAL
NC	NORMALLY CLOSED
ND	NORMAL DUTY
NEC	NATIONAL ELECTRICAL CODE
NEMA	NATIONAL ELECTRICAL MANUFACTURERS ASSOCIATION
NF	NON–FUSED
NFD	NON–FUSED DISCONNECT
NIC	NOT IN CONTRACT
NL	NIGHT LIGHT
NM	NON–METALLIC SHEATHED CABLE
NO	NUMBER; NORMALLY OPEN
NTS	NOT TO SCALE
O&P	OVERHEAD AND PROFIT
OC	ON CENTER; OVERCURRENT
OD	OUTSIDE DIAMETER
ODS	OVERHEAD DISTRIBUTION SYSTEM
OH	OVERHEAD
OHD	OVERHEAD DOOR
OL	OVERLOAD
OPGP	OFFICE PRINCIPAL GROUND POINT
OS&Y	OUTSIDE SCREW AND YOKE
OZ	OUNCE
P	POLE; PULL
PA	PUBLIC ADDRESS
PB	PUSHBUTTON; PULL BOX
PC	POWER CONNECTOR; PHOTOCELL
PD	PROTECTIVE DEVICE
PE	PROFESSIONAL ENGINEER
PF	POWER FACTOR
PFCC	POWER FACTOR CORRECTION CAPACITOR
PH	PHASE
PIV	POST INDICATOR VALVE
PKG	PACKAGE
PL	PILOT LIGHT
PLBG	PLUMBING
PNL	PANELBOARD
PR	PAIR
PRI	PRIMARY
PSF	POUNDS PER SQUARE FOOT
PSI	POUNDS PER SQUARE INCH
PSIG	POUNDS PER SQUARE INCH GAUGE
PT	POTENTIAL TRANSFORMER
PU	PER UNIT
PVC	POLYVINYL CHLORIDE
PWR	POWER
QUAN	QUANTITY
R	RESISTANCE; RELOCATED; RECESSED
RCS	RELAY CONTROL STATION
RECEPT	RECEPTACLE
RECIRC	RECIRCULATING
REF	REFERENCE; REFRIGERATED
REQ'D	REQUIRED
RET	RETURN
RF	RETURN FAN
RGS	RIGID GALVANIZED STEEL
RLA	RUNNING LOAD AMPS
RM	ROOM
RMS	ROOT MEAN SQUARE
RNC	RIGID NON–METALLIC CONDUIT
RP	RAINPROOF
RPM	REVOLUTIONS PER MINUTE
RR	RESTROOM
R&R	REMOVE & REPLACE
RS	RAPID START
RSC	RIGID STEEL CONDUIT
RT	RAINTIGHT
S	SOUTH
SCCR	SHORT–CIRCUIT CURRENT–RATING
SCHED	SCHEDULE
SCR	SHORT CIRCUIT RATING
SD	SERVICE DROP
SE	SERVICE ENTRANCE; SERVICE EQUIPMENT
SEC	SECONDARY
SF	SUPPLY FAN; SQUARE FOOT
SL	SLIM LINE; SERVICE LATERAL
SN	SOLID NEUTRAL
SP	SINGLE POLE
SPD	SURGE PROTECTIVE DEVICE
SPDT	SINGLE POLE, DOUBLE THROW
SPKR	SPEAKER
SPST	SINGLE POLE, SINGLE THROW
SQ	SQUARE
SQ FT	SQUARE FOOT
SQ IN	SQUARE INCH
SR	SERVICE RACEWAY; SURFACE RACEWAY
SS	STAINLESS STEEL; SAFETY SWITCH
S/S	START/STOP
ST	STEEL: SHUNT TRIP; SINGLE THROW
STD	STANDARD
STR	STARTER
STRUCT	STRUCTURAL
SUBS	SUBCONTRACTORS
SURF	SURFACE
SV	SOLENOID VALVE
SW	SWITCH
SWD	SWITCHING DUTY
SWBRD	SWITCHBOARD
SY	SQUARE YARD
SYM	SYMMETRICAL
SYN	SYNTHETIC
SYS	SYSTEM
T	TEMPERATURE; TRANSFORMER
TB	TERMINAL BLOCK
TC	TIME CLOCK
TCC	TEMPERATURE CONTROL CONTRACTOR
TD	TIME DELAY
TELE	TELEPHONE
TFE	TETRAFLUOROETHYLENE
TFF	TOP OF FINISHED FLOOR
TFMR	TRANSFORMER
TH	THICK
THD	TOTAL HARMONIC DISTORTION: THREAD
TR	TAMPER RESISTANT
TS	TRIGGER START
TTB	TELEPHONE TERMINAL BOARD
TV	TELEVISION
TVSS	TRANSIENT VOLTAGE SURGE SUPPRESSOR
TYP	TYPICAL
UC	UNDER (CABINET OR COUNTER)
UF	UNDERGROUND FEEDER
UG	UNDERGROUND
UH	UNIT HEATER
UHF	ULTRA HIGH FREQUENCY
UL	UNDERWRITERS LABORATORY
UNFIN	UNFINISHED
UOI	UNLESS OTHERWISE INDICATED
UTIL	UTILITY
UTP	UNSHIELDED TWISTED PAIR
UVR	UNDERVOLTAGE RELAY (RELEASE)
V	VOLT; VENTILATION
VA	VOLT AMPERES
VAR	VOLT–AMPERES REACTIVE
VAV	VARIABLE AIR VOLUME
VDT	VIDEO DISPLAY TERMINAL
VERT	VERTICAL
VFD	VARIABLE FREQUENCY DRIVE
VHF	VERY HIGH FREQUENCY
VHO	VERY HIGH OUTPUT
VOL	VOLUME
VT	VAPORTIGHT
W	WIRE; WATT; WIDE; WEST; WASTE
W/	WITH
WG	WIRE GUARD
WM	"WIREMOLD" (SURFACE RACEWAY)
WO	WELDER OUTLET
WP	WEATHERPROOF
WT	WEIGHT: WATERTIGHT
WWF	WELDED WIRE FABRIC
WW	WELL WATER; WARM WHITE
XHD	EXTRA HEAVY DUTY
XFMR	TRANSFORMER
XFER	TRANSFER
Y	WYE
°	DEGREE
Δ	DELTA
Ø	PHASE; DIAMETER
#	POUND; NUMBER
%	PERCENT
@	AT
~	APPROXIMATELY
'	FEET
"	INCHES

TYPICAL WIRING DESIGNATIONS

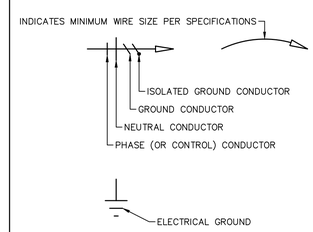

ROOM CIRCUIT DESIGNATIONS

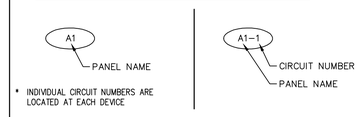

* INDIVIDUAL CIRCUIT NUMBERS ARE LOCATED AT EACH DEVICE

TYPICAL DEVICE DESIGNATIONS

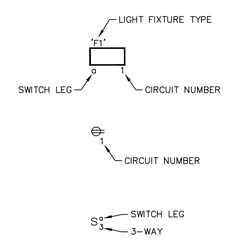

LIGHT FIXTURES

- LIGHT, CEILING
- LIGHT, CEILING
- LIGHT, WALL
- EXIT LIGHT, CEILING
- EXIT LIGHT, WALL
- EXIT LIGHT WITH DIRECTIONAL ARROW, CEILING
- EXIT LIGHT WITH DIRECTIONAL ARROW, WALL
- EMERGENCY LIGHTING UNIT
- TRACK LIGHT FIXTURE
- LIGHT FIXTURE CONNECTED TO EMERGENCY CIRCUIT (AND NIGHT LIGHT WITH 'NL' SUBSCRIPT)

SWITCHES

- S — SWITCH, SINGLE POLE
- S_2 — SWITCH, DOUBLE POLE
- S_3 — SWITCH, THREE WAY
- S_4 — SWITCH, FOUR WAY
- S_K — SWITCH, KEY OPERATED
- S_P — SWITCH, WITH PILOT LIGHT
- S_{WP} — SWITCH, WEATHERPROOF
- S_X — SWITCH, EXPLOSIONPROOF
- S_D — SWITCH, DIMMER
- MT — MULTI–TECHNOLOGY CEILING OCCUPANCY SENSOR
- US — ULTRASONIC CEILING OCCUPANCY SENSOR
- PI — PASSIVE INFRARED CEILING OCCUPANCY SENSOR
- S1 — SINGLE POLE WALL OCCUPANCY SENSOR
- S2 — TWO POLE WALL OCCUPANCY SENSOR
- TC — TIMECLOCK
- PC — PHOTOCELL
- R — RELAY PANEL
- LC — LIGHTING CONTACTOR

PANELS

- PANEL, FLUSH
- PANEL, SURFACE
- CONTROL PANEL (AS NOTED), FLUSH
- CONTROL PANEL (AS NOTED), SURFACE

RECEPTACLES AND OUTLETS

- DUPLEX RECEPTACLE
- DOUBLE DUPLEX (QUAD) RECEPTACLE
- ISOLATED GROUND DUPLEX RECEPTACLE
- ISOLATED GROUND DOUBLE DUPLEX (QUAD) RECEPTACLE
- GROUND FAULT CIRCUIT INTERRUPTER DUPLEX RECEPTACLE
- DOUBLE DUPLEX (QUAD) GROUND FAULT CIRCUIT INTERRUPTER RECEPTACLE
- WP — GROUND FAULT CIRCUIT INTERRUPTER/ WEATHERPROOF DUPLEX RECEPTACLE
- SINGLE RECEPTACLE
- FLOOR OUTLET
- SPECIAL OUTLET OR EQUIPMENT CONNECTION (AS NOTED)
- DROP CORD (AS NOTED)
- POWER POLE

POWER EQUIPMENT

- 1–PHASE MOTOR
- 3–PHASE MOTOR
- DISCONNECT
- MANUAL MOTOR STARTER
- P — MANUAL MOTOR STARTER WITH PILOT SWITCH
- MAGNETIC MOTOR STARTER
- COMBINATION DISCONNECT & MAGNETIC MOTOR STARTER
- T — TRANSFORMER

RACEWAYS

- CONDUIT, IN WALL OR CEILING
- CONDUIT, BELOW FLOOR
- CONDUIT, EXPOSED
- W — SURFACE RACEWAY ("WIREMOLD")
- CONDUIT, TURNING UP
- CONDUIT, TURNING DOWN
- CONDUIT, CAPPED
- UNDERFLOOR DUCT & JUNCTION BOX, SINGLE SYSTEM
- UNDERFLOOR DUCT & JUNCTION BOX, DUAL SYSTEM
- UNDERFLOOR DUCT & JUNCTION BOX, TRIPLE SYSTEM
- J — JUNCTION BOX
- P — PULL BOX

FIRE ALARM SYSTEMS

- FACP — FIRE ALARM CONTROL PANEL
- FAA — FIRE ALARM ANNUNCIATOR
- VCC — VOICE COMMAND CENTER
- F — MANUAL PULL STATION
- F — FIRE ALARM SPEAKER–STROBE
- FIRE ALARM STROBE LIGHT
- F — FIRE ALARM BELL
- DH — MAGNETIC DOOR HOLDER
- F — SMOKE DETECTOR
- D — DUCT TYPE SMOKE DETECTOR
- H — HEAT DETECTOR
- FS — SPRINKLER FLOW SWITCH
- TS — SPRINKLER TAMPER SWITCH

SECURITY

- DC — DOOR CONTACT
- PIR — PASSIVE INFRARED DETECTOR
- KP — KEYPAD
- C — VIDEO SURVEILLANCE CAMERA (WALL)
- C — VIDEO SURVEILLANCE CAMERA (CEILING)

TECHNOLOGY

- TELEPHONE OUTLET
- W — WALL PHONE OUTLET
- DATA OUTLET, WALL
- COMBINATION TELEPHONE/DATA OUTLET
- AP — WIRELESS ACCESS POINT
- TELEPHONE OUTLET, FLOOR
- DATA OUTLET, FLOOR
- TELEPHONE/DATA OUTLET, FLOOR
- TV — TELEVISION OUTLET
- PR — VIDEO PROJECTOR ROUGH–IN

COMMUNICATIONS

- INTERCOM CALL SWITCH
- BELL
- BUZZER
- M — MICROPHONE OUTLET
- V — SPEAKER VOLUME CONTROL
- WALL MOUNTED SPEAKER (SQUARE)
- S — WALL MOUNTED SPEAKER (ROUND)
- S — CEILING MOUNTED SPEAKER (ROUND)
- S — CEILING MOUNTED SPEAKER (SQUARE)
- P — HORN–PAGING

MISCELLANEOUS

- CLOCK (WALL)
- CLOCK (CEILING)
- PUSHBUTTON
- UP/DOWN PUSHBUTTON
- UP/DOWN/STOP PUSHBUTTON
- HORN

DANIEL E. DIMOND REGISTERED No. 60910351 STATE OF INDIANA PROFESSIONAL ENGINEER

INDIANA STATE UNIVERSITY

DA #13052

R.E. Dimond and Associates, Inc. Consulting Engineers
732 North Capitol Avenue
Indianapolis, IN 46204-1572
Phone (317) 638-8726
Fax (317) 638-8725

UA UNIT I CHILDCARE RENOVATION
MARRIED STUDENT HOUSING

SYMBOLS, NOTES & ABBREVIATIONS

FILENAME:	
PROPERTY NO.:	
REVISIONS	
1	
2	
DATE:	05/01/2013
SCALE:	AS SHOWN
DRAWN BY:	D.E.W.
CHECKED BY:	D.E.W.
APPROVED BY:	D.E.D.
PROJECT NO.:	DA #13052

SHEET NO.:

E001

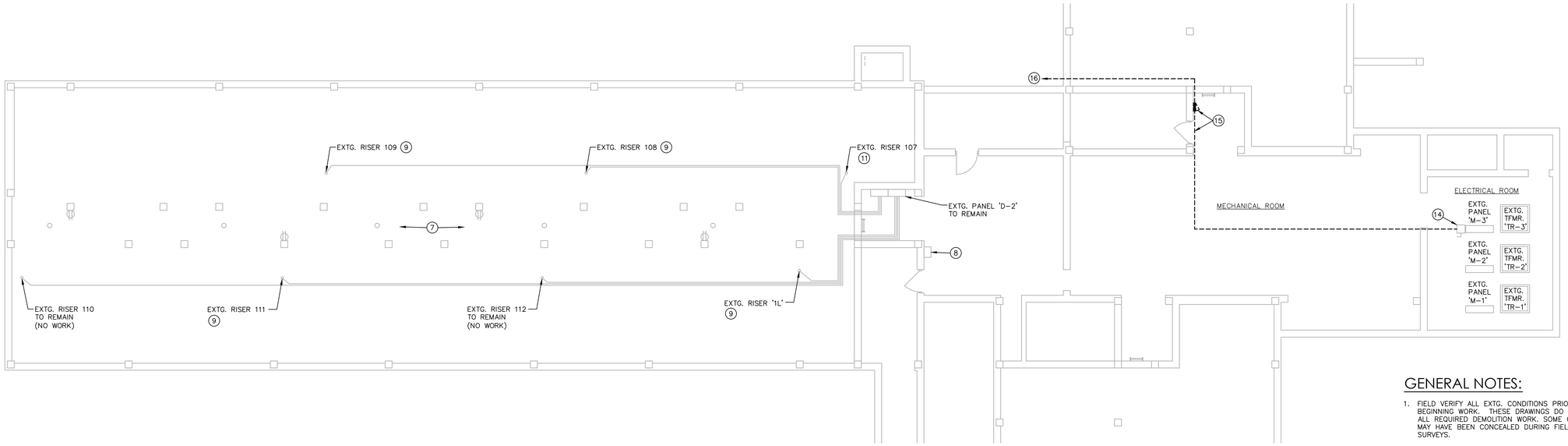

CRAWL SPACE/BASEMENT PLAN - ELECTRICAL DEMOLITION

SCALE: 1/8" = 1'-0"

NORTH

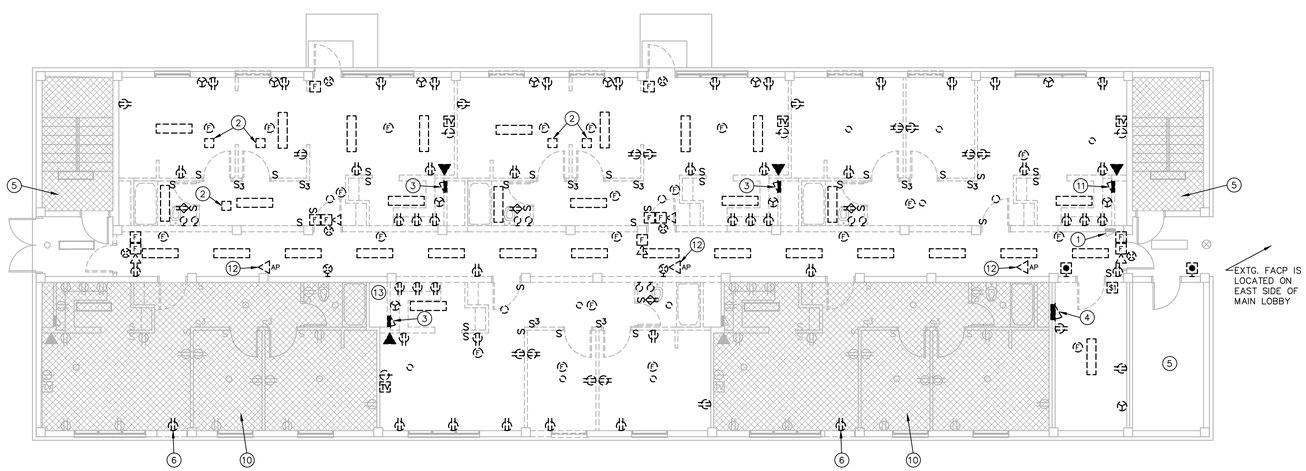

FIRST FLOOR PLAN - ELECTRICAL DEMOLITION

SCALE: 1/8" = 1'-0"

NORTH

DEMOLITION PLAN NOTES:

1. EXTG. TELECOMM CABINET TO REMAIN. ALL EXTG. VOICE AND DATA CABLES IN THIS REMODEL AREA (MINUS THE CABLES FOR WIRELESS ACCESS POINTS) ARE CURRENTLY WIRED TO THIS CABINET. REMOVE ALL STATION CABLES FROM JACKS TO BE REMOVED BACK TO THIS CABINET. THIS CABINET IS FED FROM THE EXTG. MDF, SEE DWG. E101. THIS CABINET ALSO CONTAINS RISER CABLING TO SIMILAR CABINETS ON EACH OF THE UPPER FLOORS, WHICH SHALL REMAIN INTACT.
2. REMOVE EXTG. EMERGENCY LIGHT FIXTURE. REMOVE ALL SUCH LIGHTS IN REMODEL AREAS.
3. REMOVE EXTG. ELECTRICAL LOADCENTER THAT SERVES THIS APARTMENT UNIT. THIS PANEL IS ON A RISER WITH THREE OTHER PANELS LOCATED IN APARTMENTS ABOVE. THE EXISTING RISER SHALL BE REWORKED TO MAINTAIN SERVICE TO THOSE UPPER APARTMENTS. SEE RISER DIAGRAM ON DWG. E102.
4. REMOVE EXTG. ELECTRICAL PANEL '1L' THAT SERVES THE COMMON AREAS IN THIS WING, ON THIS FLOOR. THIS PANEL IS ON A RISER WITH THREE OTHER PANELS LOCATED IN ABOVE LAUNDRY ROOMS. THE EXISTING RISER SHALL BE REWORKED TO MAINTAIN SERVICE TO THOSE UPPER PANELS. SEE RISER DIAGRAM ON DWG. E102.
5. SEE DWG. E101 FOR NOTES REGARDING REFEED TO EXTG. EQUIPMENT IN THIS SPACE THAT IS CURRENTLY FED FROM EXTG. PANEL '1L'
6. REMOVE EXTG. RECEPTACLE TO ALLOW FOR NEW DOOR CONSTRUCTION. WIRING IS FED THRU FLOOR SLAB TO ADJACENT DEVICES. PROVIDE SURFACE RACEWAY AND WIRE AS REQUIRED TO RECONNECT ALL SUCH DEVICES.
7. REFEED EXTG. LIGHTS AND RECEPTACLES IN CRAWLSPACE FROM A DEDICATED SPARE CIRCUIT IN EXTG. PANEL '2L' ON THE SECOND FLOOR AND LABEL ACCORDINGLY.
8. EXTG. TV CABLE TAP BOX. COAX CABLES TO APARTMENTS IN THIS WING ARE ROUTED FROM THIS BOX, THRU CRAWLSPACE, THEN UP THRU PIPE CHASES. FOR CABLES IN CHASES THAT ARE BEING REMOVED, INTERCEPT SUCH CABLES ABOVE FIRST FLOOR CEILING AND EXTEND TO THIS TAP BOX AS REQUIRED AND RECONNECT. EACH APARTMENT HAS AT LEAST ONE COAX CABLE "HOMERUN" TO THIS TAP BOX.
9. INTERCEPT EXTG. PANEL FEEDER RISER IN CRAWLSPACE AND REROUTE THRU NEW CHASE ON FIRST FLOOR AND RECONNECT TO EXTG. RISER ABOVE FIRST FLOOR CEILING TO MAINTAIN SERVICE TO UPPER APARTMENTS. SEE RISER DIAGRAM ON DWG. E102.
10. EXTG. APARTMENT TO REMAIN, EXCEPT AS NOTED OTHERWISE.
11. EXTG. ELECTRICAL LOADCENTER THAT SERVES THIS APARTMENT UNIT TO REMAIN AND BE USED AS A JUNCTION BOX. THIS PANEL IS ON A RISER WITH THREE OTHER PANELS LOCATED IN APARTMENTS ABOVE. REMOVE EXTG. PANEL INTERIORS AND RECONNECT FEEDER CONDUCTORS AS REQUIRED TO MAINTAIN SERVICE TO UPPER APARTMENTS. SEE RISER DIAGRAM ON DWG. E102.
12. REMOVE EXTG. WIRELESS ACCESS POINTS, WHICH ARE "HOMERUN" WIRED TO EXTG. MDF THRU THE CRAWL SPACE/BASEMENT. REMOVE THIS CABLING.
13. EXTG. CABLES TO WIRELESS ACCESS POINTS ON ALL FLOORS ARE ROUTED THRU THIS CHASE. REWORK AS REQUIRED TO MAINTAIN OPERATION ON UPPER FLOORS.
14. EXTG. 100 AMP, 2 POLE DISCONNECT SWITCH TO REMAIN.
15. REMOVE EXTG. PANEL THAT SERVES EXTG. HVAC THRU-WALL UNITS LOCATED IN UNITS 108 & 109. REMOVE ASSOCIATED FEEDER.
16. REMOVE BRANCH CIRCUIT WIRING TO EXTG. HVAC THRU-WALL UNITS LOCATED IN UNITS 108 & 109. MAJORITY OF EXTG. CONDUIT IS BURIED UNDERGROUND AND SHALL REMAIN. REMOVE EXTG. WIRING AND ALL EXPOSED RACEWAY.

GENERAL NOTES:

1. FIELD VERIFY ALL EXTG. CONDITIONS PRIOR TO BEGINNING WORK. THESE DRAWINGS DO NOT SHOW ALL REQUIRED DEMOLITION WORK. SOME CONDITIONS MAY HAVE BEEN CONCEALED DURING FIELD SURVEYS.
2. ALL DEVICES AND EQUIPMENT SHOWN DASHED OR WITH HEAVY LINE WEIGHT SHALL BE REMOVED IN THEIR ENTIRETY, INCLUDING ALL WIRING TO SOURCE. UNLESS OTHERWISE NOTED.
3. DISPOSAL OF DEMOLISHED MATERIALS SHALL COMPLY WITH ALL LOCAL, STATE & FEDERAL REGULATIONS.
4. CONTRACTORS SHALL PROTECT ALL EXTG. OWNER FACILITIES, THAT ARE TO REMAIN, DURING CONSTRUCTION. ANY FACILITIES DAMAGED OR DISCONNECTED BY CONTRACTOR SHALL BE IMMEDIATELY RESTORED TO PREVIOUS CONDITION.
5. OWNER SHALL HAVE "RIGHT OF FIRST REFUSAL" FOR ALL DEMOLISHED ELECTRICAL ITEMS. CONTRACTOR SHALL COORDINATE W/ OWNER PRIOR TO BEGINNING WORK TO DETERMINE WHAT ITEMS THE OWNER MAY BE INTERESTED IN KEEPING. CONTRACTOR SHALL CAREFULLY REMOVE ALL SUCH ITEMS AND DELIVER TO OWNER DESIGNATED STORAGE AREA ON CAMPUS. FOR ALL ITEMS DEEMED OBSOLETE BY THE OWNER, CONTRACTOR SHALL IMMEDIATELY REMOVE SUCH ITEMS FROM THE PREMISES, UNLESS OTHERWISE NOTED.
6. FOR MECH. EQUIPMENT BEING REMOVED. REMOVE ALL ASSOCIATED DISCONNECTS, CONTROLLERS, WIRING, ETC. COMPLETE. VERIFY W/ M.C.
7. FOR EQUIPMENT OR DEVICES BEING REMOVED FROM WALLS THAT WILL REMAIN, PROVIDE A BLANK COVERPLATE (TO MATCH NEW) ON EXTG. BOX.
8. CONTRACTOR SHALL REMOVE ALL EXTG. TECHNOLOGY CABLING TO DEVICES AND EQUIPMENT BEING REMOVED, AS INDICATED.
9. PROVIDE ADEQUATE SUPPORT FOR EXTG. CABLING/RACEWAYS ABOVE CEILING AS REQ'D. REMOVE ALL OBSOLETE CABLING, WIRING, RACEWAYS, ETC.
10. REMOVE ALL ASSOCIATED ELECTRICAL FOR ANY EXISTING EQUIPMENT BEING REMOVED BY ANY TRADE. REFER TO ALL DRAWINGS.
11. CONTRACTOR SHALL REMOVE ALL EXTG. DEVICES ON WALLS BEING REMOVED, WHETHER DEVICES ARE SHOWN OR NOT, UNLESS OTHERWISE INSTRUCTED.
12. COORDINATE SCHEDULING OF DEMOLITION WORK WITH OWNER AND ALL TRADES.
13. ALL EXTG. FIRE ALARM EQUIPMENT AND DEVICES SHALL BE CAREFULLY REMOVED BY THE CONTRACTOR AND TURNED OVER TO THE OWNER FOR SALVAGE. COORDINATE WITH THE OWNER PRIOR TO REMOVAL AND DELIVER TO DESIGNATED LOCATION ON CAMPUS FOR STORAGE. CONTRACTOR SHALL PROVIDE AND USE FIBER DRUMS FOR STORAGE OF DEVICES AND DELIVER DRUMS/DEVICES TO OWNER.
14. PATCH ALL EXTG. HOLES THRU WALLS AND FLOORS WHERE EXTG. RACEWAYS OR CABLES ARE REMOVED.
15. MAINTAIN SERVICE TO ADJACENT AREAS. FOR CIRCUITS THAT PASS THRU A DEVICE OR EQUIPMENT THAT'S BEING REMOVED AND ALSO SERVES SOMETHING THAT IS TO REMAIN, REWORK AND REROUTE THE EXISTING WIRING AS REQUIRED TO MAINTAIN SUCH SERVICE.
16. PER EXTG. DWGS., THE MAJORITY OF CONDUITS SERVING DEVICES ARE ROUTED THRU THE SLAB AND CONDUITS TO LIGHTS ARE ROUTED ABOVE THE CEILING. VERIFY IN FIELD.
17. ANY INTERRUPTION OF SERVICES TO APARTMENTS SHALL BE KEPT TO A MINIMUM. CONTRACTOR SHALL COORDINATE MEANS AND METHODS AND SCHEDULING WITH OWNER MANY WEEKS IN ADVANCE.

DEMOLITION LEGEND:

EXISTING WORK TO BE REMOVED

EXISTING WORK TO REMAIN

DANIEL E. DIMOND REGISTERED No. 60910351 STATE OF INDIANA PROFESSIONAL ENGINEER

INDIANA STATE UNIVERSITY
DA #13052
R.E. Dimond and Associates, Inc. Consulting Engineers
732 North Capitol Avenue
Indianapolis, IN 46204
Phone (317) 634-6672
Fax (317) 638-8725

UA UNIT I CHILDCARE RENOVATION
MARRIED STUDENT HOUSING

CRAWL SPACE/BASEMENT & FIRST FLOOR - ELECTRICAL DEMOLITION

FILENAME:	
PROPERTY NO.:	
REVISIONS	
1	
2	
DATE:	05/01/2013
SCALE:	AS SHOWN
DRAWN BY:	D.E.W.
CHECKED BY:	D.E.W.
APPROVED BY:	D.E.D.
PROJECT NO.:	DA #13052

SHEET NO.:

ED101

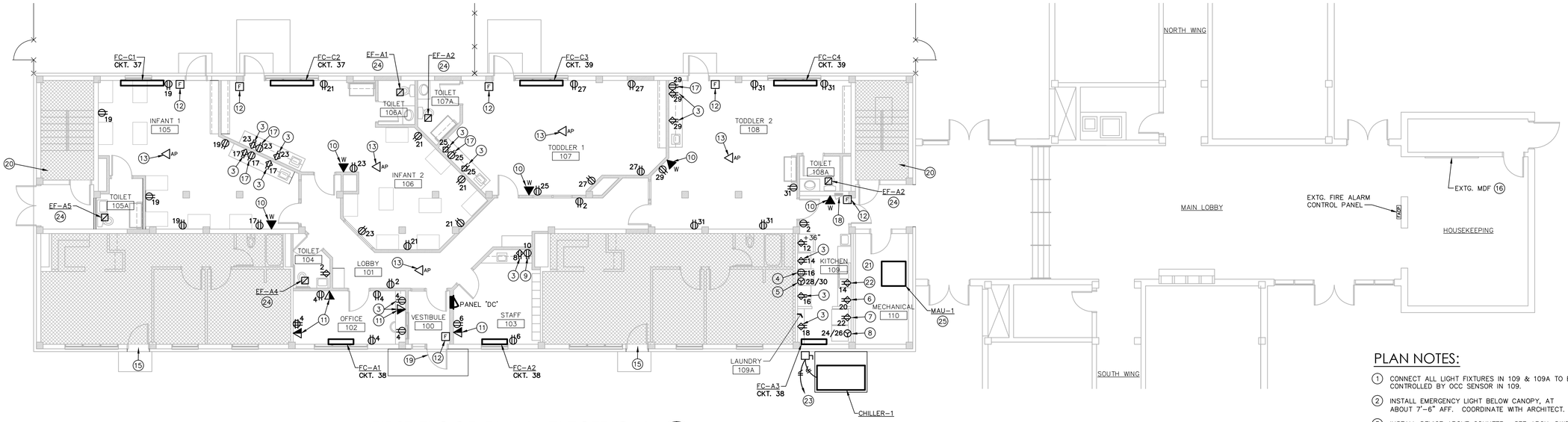

FIRST FLOOR PLAN - ELECTRICAL

SCALE: 1/8" = 1'-0"

NORTH

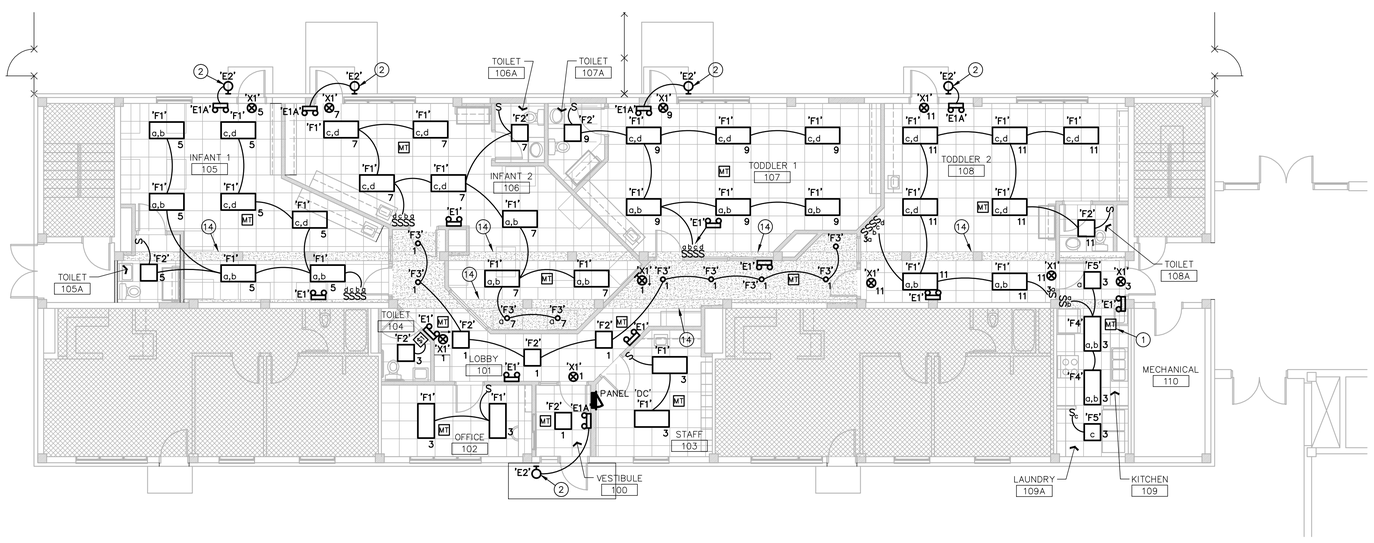

FIRST FLOOR PLAN - LIGHTING

SCALE: 1/8" = 1'-0"

NORTH

GENERAL NOTES:

1. SEE DRAWING E001 FOR SYMBOLS.
2. ALL CIRCUITS SHALL BE FROM NEW PANEL 'DC' (DAYCARE) UNLESS OTHERWISE NOTED.
3. REFER TO INTERIOR ELEVATIONS ON ARCHITECTURAL DRAWINGS FOR LOCATIONS OF DEVICES AT CASEWORK.
4. **ALL RECEPTACLES SHALL BE TAMPER-PROOF HOSPITAL GRADE TYPE, LIKE HUBBELL #HBL8300SG SERIES DUPLEX OR #GFR8300SG SERIES GFCI DUPLEX.**
5. ALL DEVICE BOXES SHALL BE RECESSED AND ALL RACEWAYS CONCEALED. CUT AND PATCH EXTG. WALLS/CEILINGS AS REQUIRED. THE USE OF SURFACE BOXES AND RACEWAYS SHALL BE ALLOWED ONLY AS APPROVED BY THE OWNER.
6. ALL 120 VOLT CIRCUITS SHALL UTILIZE SEPARATE INDEPENDENT NEUTRAL CONDUCTORS. DO NOT SHARE NEUTRALS.
7. CONTRACTOR SHALL COORDINATE WITH ALL TRADES. NO ADDITIONAL COMPENSATION WILL BE ALLOWED FOR INCORRECT WORK, OR FOR INFRINGEMENT UPON OTHERS WORK, DUE TO A LACK OF COORDINATION.
8. COORDINATE & VERIFY LOCATIONS OF DEVICES W/ BLOCK COURSING, FINISH MATERIALS, CASEWORK, ETC. PRIOR TO ROUGH-IN.
9. ALL WIRING SHALL BE MINIMUM #12 AWG. IN 3/4" CONDUIT UNLESS OTHERWISE NOTED OR REQUIRED.
10. ALL LOW VOLTAGE PLENUM-RATED CABLING (FIRE ALARM, TELEPHONE/DATA, ETC.) SHALL BE CONCEALED ABOVE ACCESSIBLE CEILINGS. FOR CABLES BEING ROUTED THRU AREAS WITH EXPOSED STRUCTURE, INSTALL CABLES IN MINIMUM 3/4" CONDUITS.
11. REPLACE ALL EXISTING BLANK COVERPLATES WITH NEW. FINISH/MATERIAL TO MATCH THOSE USED FOR NEW DEVICES.
12. ROUTE NEW TECHNOLOGY CABLING IN CRAWLSPACE AND BASEMENT AS MUCH AS POSSIBLE TO AVOID NEED FOR EXPOSED RACEWAYS IN MAIN LOBBY. COORDINATE WITH OWNER.
13. CONNECT ALL EMERGENCY LIGHTS TO THE UNSWITCHED LIGHTING CIRCUIT SERVING THE ROOM'S NORMAL LIGHT FIXTURES. INSTALL ALL EMERGENCY LIGHTS AT 7'-6" AFF UNLESS OTHERWISE DIRECTED.
14. FIRE ALARM SYSTEM UPGRADES WILL BE BY OTHERS UNDER SEPARATE CONTRACT. COORDINATE IN FIELD.
15. UNDER ALTERNATE BID, CHANGE LIGHT FIXTURE TYPES 'F1' AND 'F2' TO LED LAMPING. SEE LIGHT FIXTURE SCHEDULE ON DWG. E401. 'F1' FIXTURES IN ROOMS 105, 106, 107 & 108 SHALL BE DIMMED. PROVIDE A COMPATIBLE 0-10V DIMMER TO REPLACE SWITCHES a & b AND ANOTHER DIMMER TO REPLACE SWITCHES c & d (TOTAL OF TWO DIMMERS PER ROOM). REMAINDER OF 'F1' FIXTURES AND ALL 'F2' FIXTURES SHALL BE SWITCHED, AS SHOWN FOR BASE BID SCOPE.

PLAN NOTES:

1. CONNECT ALL LIGHT FIXTURES IN 109 & 109A TO BE CONTROLLED BY OCC SENSOR IN 109.
2. INSTALL EMERGENCY LIGHT BELOW CANOPY, AT ABOUT 7'-6" AFF. COORDINATE WITH ARCHITECT.
3. INSTALL DEVICE ABOVE COUNTER. SEE ARCH. DWGS.
4. INSTALL DEVICE INSIDE UPPER WALL CABINET FOR MICROWAVE.
5. PROVIDE 50A-120/240V-1ø-4W RANGE RECEPTACLE AND WIRE WITH 3#6, 1#10G - 1"C TO PANEL 'DC'.
6. INSTALL DEVICE BELOW COUNTER FOR DISHWASHER.
7. PROVIDE DEVICE FOR CLOTHES WASHER. CONFIRM LOCATION WITH OWNER.
8. PROVIDE 30A-120/240V-1ø-4W CLOTHES DRYER RECEPTACLE AND WIRE WITH 3#10, 1#10G - 3/4"C TO PANEL 'DC'.
9. INSTALL DEVICE BELOW COUNTER FOR REFRIGERATOR.
10. PROVIDE CAT.6a JACK AND CABLE FOR WALL PHONE, AT 46" AFF TO CENTER. WIRE TO EXTG. MDF.
11. PROVIDE (1) VOICE AND (1) DATA CAT.6a JACKS AND CABLES. WIRE TO EXTG. MDF.
12. PROVIDE ROUGH-IN FOR FUTURE FIRE ALARM PULL STATION. INSTALL AT 46" AFF TO CENTER WITH 3/4"C TO ABOVE ACCESSIBLE CEILING.
13. PROVIDE CAT.6a JACK AND CABLE ABOVE CEILING FOR FUTURE WIRELESS ACCESS POINT. LEAVE 10'-0" SERVICE LOOP IN CABLE. WIRE TO EXTG. MDF.
14. EXTG. CONCRETE BEAM TO BE EXPOSED BELOW CEILING. CONTRACTOR SHALL ROUTE CONDUITS AND WIRING THRU FULL HEIGHT WALLS TO AVOID EXPOSED CONDUITS AS MUCH AS POSSIBLE.
15. SEE DWG. ED101 FOR WORK IN THIS AREA REGARDING DEMOLITION OF EXTG. RECEPTACLE AND REFEED OF ADJACENT RECEPTACLES. ALSO, PROVIDE A LIGHT SWITCH NEXT TO DOOR AND WIRE TO CONTROL 1/2 OF NEAREST RECEPTACLE.
16. CONNECT NEW VOICE AND DATA CABLES TO EXTG. PATCH PANELS AT EXTG. MDF. TERMINATE PER SPECS.
17. INSTALL DEVICE BELOW COUNTER FOR REFRIGERATOR.
18. EXTG. TELECOMM CABINET TO REMAIN.
19. PROVIDE 120V CIRCUIT #15 TO DOOR OPERATOR AND CONNECT ALL CONTROLS/PUSHPADS.
20. RECONNECT EXTG. CUH IN STAIRS TO SPARE CIRCUIT IN EXTG. PANEL '2L' IN 2ND FLOOR LAUNDRY. RELABEL CUH ACCORDINGLY.
21. RECONNECT EXTG. LIGHTS, RECEPTACLES AND CUH IN MECHANICAL 110 TO SPARE CIRCUIT IN EXTG. PANEL '2L' IN 2ND FLOOR LAUNDRY. RELABEL ACCORDINGLY.
22. PROVIDE RECEPTACLE BELOW COUNTER FOR DISPOSAL. PROVIDE SWITCH ABOVE COUNTER FOR CONTROL.
23. PROVIDE 100A/2P NF NEMA 3R DISCONNECT SWITCH. VERIFY LOCATION AND CONNECTION IN FIELD. PROVIDE CIRCUIT FROM PANEL 'DC-M' IN BASEMENT, CONSISTING OF 2#3, 1#8G - 1"C. ROUTE THRU CRAWL SPACE. CONNECT TO 80A/2P BREAKER IN PANEL.
24. CONNECT EXHAUST FAN TO SWITCHED LIGHTING CIRCUIT.
25. PROVIDE 25A, 120V CIRCUIT FOR MAU-1 WITH #10 WIRE FROM PANEL 'DC-M' IN BASEMENT. CONNECT TO 25A/1P BREAKER IN PANEL.

RENOVATION LEGEND:

NEW WORK TO BE INSTALLED

EXISTING WORK TO REMAIN

DANIEL E. DIMOND
REGISTERED
No. 60910351
STATE OF INDIANA
PROFESSIONAL ENGINEER

INDIANA STATE UNIVERSITY

DA #13052

R.E. Dimond and Associates, Inc.
Consulting Engineers
732 North Capitol Avenue
Indianapolis, IN 46204
Phone (317) 634-8672
Fax (317) 638-8725

UA UNIT I CHILDCARE RENOVATION
MARRIED STUDENT HOUSING

FIRST FLOOR PLAN - ELECTRICAL

FILENAME:	
PROPERTY NO.:	
REVISIONS	
1	
2	
DATE:	05/01/2013
SCALE:	AS SHOWN
DRAWN BY:	D.E.W.
CHECKED BY:	D.E.W.
APPROVED BY:	D.E.D.
PROJECT NO.:	DA #13052

SHEET NO.: E101

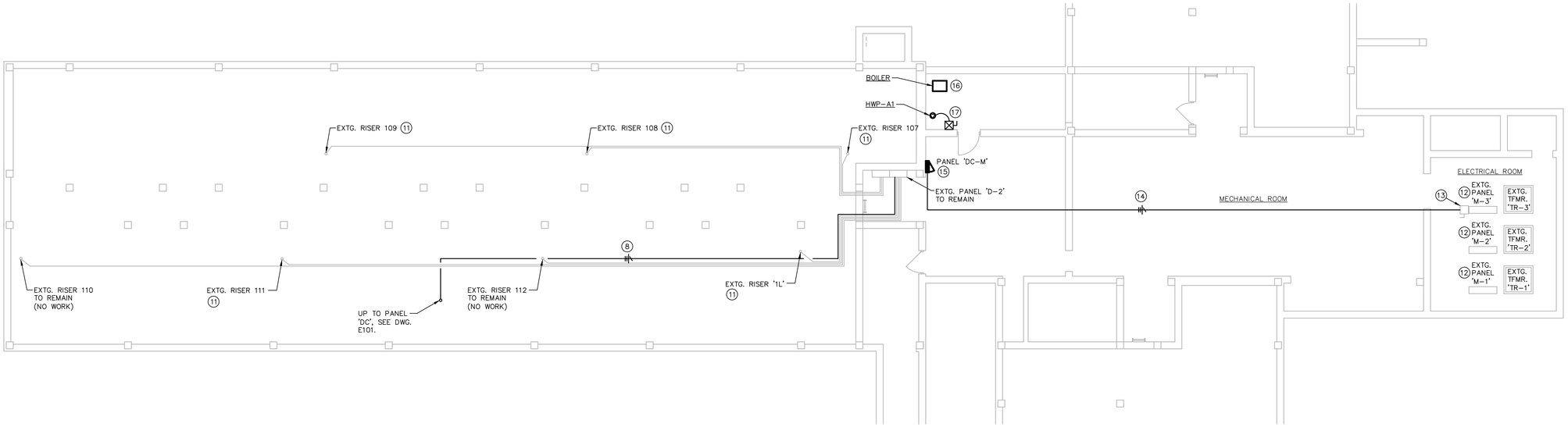

CRAWL SPACE/BASEMENT PLAN - ELECTRICAL

SCALE: 1/8" = 1'-0"

NORTH

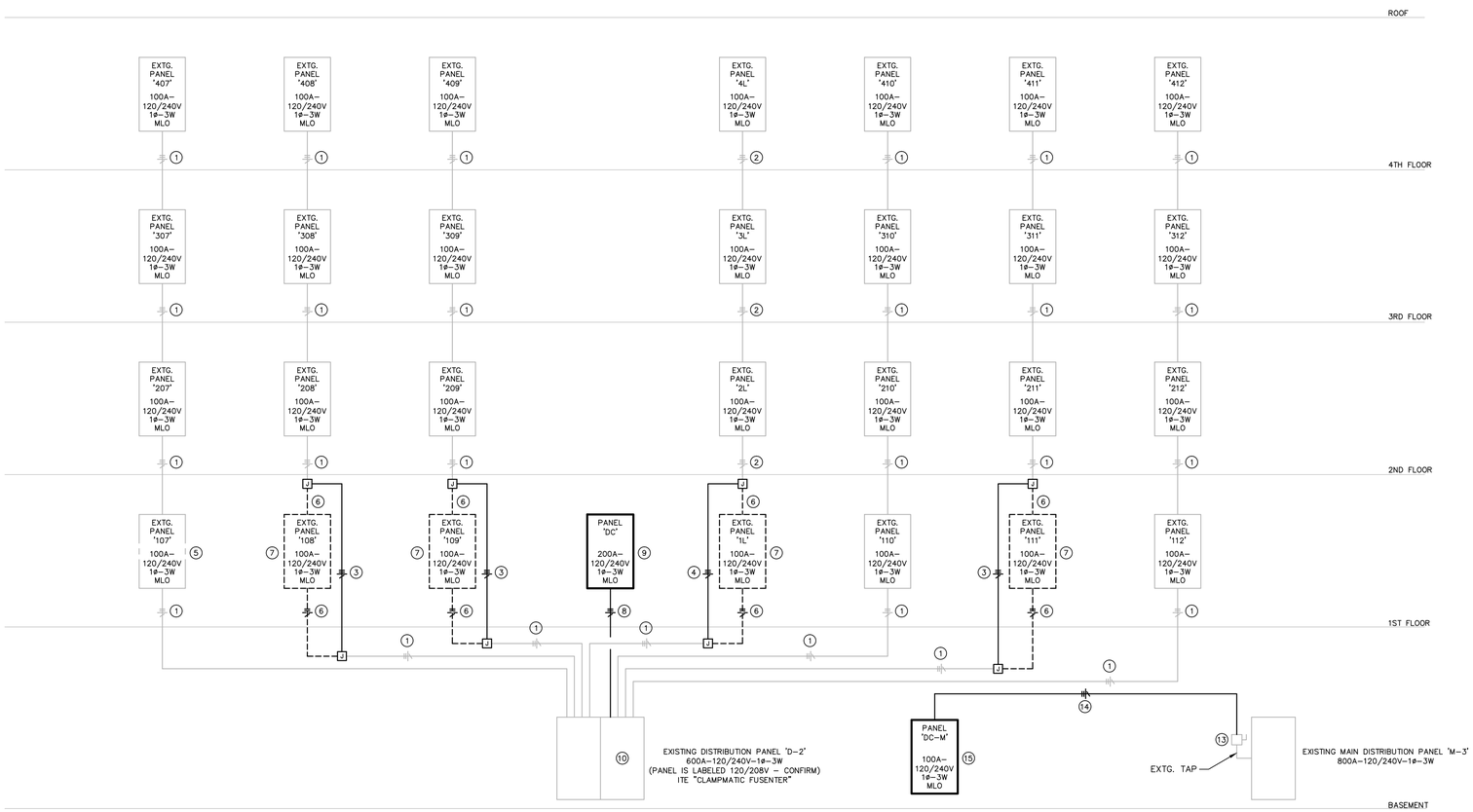

RISER DIAGRAM - ELECTRICAL

NO SCALE

GENERAL NOTES:

1. SEE DRAWING E001 FOR SYMBOLS.
2. SEE DRAWING E101 FOR GENERAL NOTES.

PLAN NOTES:

(1) EXTG. FEEDER/RISER TO REMAIN, 2#3/0, 1#2/0N – 2"C.

(2) EXTG. FEEDER/RISER TO REMAIN, 3#2, 1–1/4"C.

(3) INTERCEPT EXTG. PANEL FEEDER RISER IN CRAWLSPACE AND REROUTE THRU NEW CHASE ON FIRST FLOOR AND RECONNECT TO EXTG. RISER ABOVE FIRST FLOOR CEILING TO MAINTAIN SERVICE TO UPPER APARTMENTS. PROVIDE ACCESSIBLE JUNCTION BOXES, SIZE PER NEC. PERFORM THIS WORK AS REQUIRED TO MINIMIZE DOWNTIME TO UPPER APARTMENTS. SUBMIT PROPOSED METHOD AND SCHEDULE TO OWNER/ENGINEER FOR PRIOR–APPROVAL. PROVIDE 2#3/0, 1#2/0N, 1#6G – 2"C.

(4) INTERCEPT EXTG. PANEL FEEDER RISER IN CRAWLSPACE AND REROUTE THRU NEW CHASE ON FIRST FLOOR AND RECONNECT TO EXTG. RISER ABOVE FIRST FLOOR CEILING TO MAINTAIN SERVICE TO UPPER PANELS. PROVIDE ACCESSIBLE JUNCTION BOXES, SIZE PER NEC. PERFORM THIS WORK AS REQUIRED TO MINIMIZE DOWNTIME TO UPPER PANELS. SUBMIT PROPOSED METHOD AND SCHEDULE TO OWNER/ENGINEER FOR PRIOR–APPROVAL. PROVIDE 3#2, 1#6G – 1–1/4"C.

(5) EXTG. ELECTRICAL LOADCENTER THAT SERVES THIS APARTMENT UNIT TO REMAIN AND BE USED AS A JUNCTION BOX. REMOVE EXTG. PANEL INTERIORS AND RECONNECT FEEDER CONDUCTORS AS REQUIRED TO MAINTAIN SERVICE TO UPPER APARTMENTS. CONNECT WITH 2#3/0, 1#2/0N.

(6) REMOVE PORTION OF EXTG. FEEDER.

(7) REMOVE EXTG. PANEL.

(8) PROVIDE NEW 200 AMP, 120/240V, 1ø, 3W FEEDER, 3#3/0, 1#6G – 2"C TO NEW PANEL 'DC'.

(9) PROVIDE NEW PANEL 'DC' FOR DAYCARE. PANEL SHALL BE FLUSH MOUNT, 200 AMP, 120/240V, 1ø, 3W, MLO, 54 CIRCUIT WITH (50)20A/1P, (1)30A/2P & (1)50A/2P BRANCH BREAKERS.

(10) PROVIDE A 200A–2P FUSIBLE SWITCH IN EXTG. SPACE IN DIST. PANEL 'D–2' TO SERVE PANEL 'DC'. SWITCH SHALL BE LIKE ITE CLAMPMATIC VACU–BREAK MODEL V7E2204LR SERIES, OR COMPATIBLE EQUAL, TO MATCH EXTG. FUSE AT 200 AMPS. PANEL 'D–2' S.O. #76–33689–051.

(11) SEE RISER DIAGRAM FOR REQUIRED WORK ASSOCIATED WITH EXTG. FEEDER/RISER AND SEE DWGS. E101 & ED101.

(12) EXTG. MAIN DISTRIBUTION PANEL TO REMAIN.

(13) EXTG. 100 AMP, 2 POLE DISCONNECT SWITCH TO REMAIN.

(14) PROVIDE NEW 100 AMP, 120/240V, 1ø, 3W FEEDER CONSISTING OF 3#3, 1#8G – 1–1/4"C.

(15) PROVIDE NEW PANEL 'DC–M' FOR DAYCARE MECHANICAL EQUIPMENT. PANEL SHALL BE SURFACE MOUNT, 100 AMP, 120/240V, 1ø, 3W, MLO 24 CIRCUIT WITH (1)80A/2P, (1)20A/2P, (1)25A/1P, (9)20A/1P BRANCH BREAKERS AND (10)1P SPACES.

(16) PROVIDE DEDICATED 20A, 120V CIRCUIT FROM PANEL 'DC–M' TO BOILER. PROVIDE ON/OFF SWITCH.

(17) PROVIDE COMB. MAGNETIC STARTER WITH H–O–A AND FUSES FOR PUMP HWP–A1. PROVIDE 20A, 240V, 1ø CIRCUIT FROM PANEL 'DC–M' AND CONNECT TO 20A/2P BREAKER IN PANEL.

RENOVATION LEGEND:

NEW WORK TO BE INSTALLED

EXISTING WORK TO REMAIN

DANIEL E. DIMOND
REGISTERED
No. 60910351
STATE OF INDIANA
PROFESSIONAL ENGINEER

INDIANA STATE UNIVERSITY

DA #13052

R.E. Dimond and Associates, Inc.
Consulting Engineers
732 North Capitol Avenue
Indianapolis, IN 46204
Phone (317) 634-4672
Fax (317) 638-8725

UA UNIT I CHILDCARE RENOVATION
MARRIED STUDENT HOUSING

CRAWL SPACE/BASEMENT PLAN
& RISER DIAGRAM - ELECTRICAL

FILENAME:	
PROPERTY NO.:	
REVISIONS	
1	
2	
DATE:	05/01/2013
SCALE:	AS SHOWN
DRAWN BY:	D.E.W.
CHECKED BY:	D.E.W.
APPROVED BY:	D.E.D.
PROJECT NO.:	DA #13052

SHEET NO.:

E102

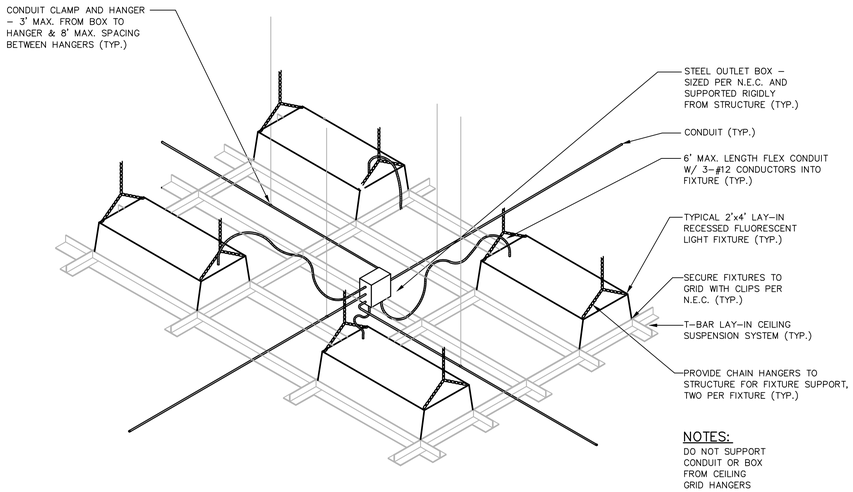

NOTES:
DO NOT SUPPORT CONDUIT OR BOX FROM CEILING GRID HANGERS

TYPICAL RECESSED FLUORESCENT LIGHTING INSTALLATION

NO SCALE

LIGHTING FIXTURE SCHEDULE

MARK	DESCRIPTION	MOUNTING	LAMP	VOLTAGE	MANUFACTURER(S)
"F1"	2'x4' FLUORESCENT TROFFER, STATIC, NOMINAL 4" DEEP WHITE STEEL HOUSING, LUMINOUS SIDE DIFFUSERS, OPAL SATIN CENTER DIFFUSER, REGRESSED DIFFUSER TRIM, (2) PROGRAMMED RAPID START ELECTRONIC BALLASTS (10% THD).	RECESSED, LAY–IN GRID	(3) F32–T8 3500K FLUORESCENT	120V	FINELITE #HPR–F–2X4–DCO–3T8–120–DC–C1–PS OR EQUAL BY: NEORAY, LINEAR, FOCAL POINT
"F2"	SAME AS "F1" EXCEPT 2'x2' AND (1) BALLAST.	RECESSED, LAY–IN GRID	(3) F17–T8 3500K FLUORESCENT	120V	FINELITE #HPR–F–2X2–DCO–3T8–120–SC–C1–PS OR EQUAL BY: NEORAY, LINEAR, FOCAL POINT
"F3"	NOMINAL 6" DIAMETER LED CYLINDER DOWNLIGHT, NOMINAL 12" DEEP, REGRESSED LENS, CLEAR ALZAK REFLECTOR AND TRIM, ELECTRONIC DRIVER, NOMINAL 1000 LUMENS. FINISH COLOR AS SELECTED BY ARCHITECT.	SURFACE	LED 3500K 80+ CRI	120V	PRESCOLITE # LD6LED4S–W–35K–8–FL35–XX OR EQUAL BY: JUNO, LITHONIA, PORTFOLIO
"F4"	2'x4' FLUORESCENT TROFFER, STATIC, NOMINAL 4" DEEP WHITE STEEL HOUSING, FLUSH WHITE STEEL DOOR FRAME, SPRING–LOADED LATCHES, INTEGRAL T–BAR CLIPS, 0.156" THICK #19 PATTERN PRISMATIC ACRYLIC LENS, (2) PROGRAMMED RAPID START ELECTRONIC BALLAST (10% THD)	RECESSED, LAY–IN GRID	(4) F32–T8 3500K FLUORESCENT	120V	COLUMBIA #STB–24–432G–FSA19–EPU–PAF–SLL OR EQUAL BY: METALUX, WILLIAMS, LITHONIA
"F5"	SAME AS "F4" EXCEPT 2'x2'	RECESSED, LAY–IN GRID	(4) F17–T8 3500K FLUORESCENT	120V	COLUMBIA #STB–22–417G–FSA19–EPU–PAF–SLL OR EQUAL BY: METALUX, WILLIAMS, LITHONIA
"E1"	BATTERY–POWERED EMERGENCY LIGHT, WHITE THERMOPLASTIC HOUSING, (2) 1 WATT LED LAMPS, NICKEL METAL HYDRIDE (NiMH) BATTERY, SELF DIAGNOSTICS, 5 YEAR WARRANTY.	SURFACE, WALL	(2) 1 WATT LED	120/277V	DUAL–LITE #EV–2–I OR APPROVED EQUAL BY: EMERGLITE, SURE–LITES, LITHONIA
"E1A"	SAME AS "E1" EXCEPT WITH REMOTE CAPACITY FOR (2) REMOTE LAMPS.	SURFACE, WALL	(2) 1 WATT LED	120/277V	DUAL–LITE #EV–4–I OR APPROVED EQUAL BY: EMERGLITE, SURE–LITES, LITHONIA
"E2"	REMOTE–POWERED EMERGENCY LIGHT, WHITE DIE CAST ALUMINUM HOUSING, (2) 1 WATT LED LAMPS, 3 YEAR WARRANTY.	SURFACE, WALL	(2) 1 WATT LED	4.8Vdc	DUAL–LITE #EVO–D–W OR APPROVED EQUAL BY: EMERGLITE, SURE–LITES, LITHONIA
"X1"	EXIT LIGHT, NOMINAL 13"Wx9"Hx2"D, WHITE THERMOPLASTIC HOUSING, RED LETTERS, CHEVRON DIRECTIONAL INDICATORS AS NEEDED, UNIVERSAL MOUNTING, DUAL VOLTAGE, UNIVERSAL FACE, Ni–CAD BATTERY. SELF–DIAGNOSTICS, 5 YEAR WARRANTY.	UNIVERSAL, SURFACE (CEILING MOUNT UNLESS OTHERWISE NOTED, SHOWN OR REQUIRED)	L.E.D.	120/277	DUAL–LITE #LX–U–R–W–E–I OR APPROVED EQUAL BY: EMERGLITE, SURE–LITES, LITHONIA

NOTES:
1. ALL COLORS & FINISHES TO BE VERIFIED WITH THE ARCHITECT BEFORE ORDERING FIXTURES.

UNDER ALTERNATE BID, PROVIDE LED LAMPING FOR FIXTURE TYPES 'F1' AND 'F2'. 'F1' FIXTURES SHALL BE LIKE FINELITE #HPR–F–2X4–DCO–LED–HO–3500K–120–SC–C1 (NOMINAL 5600 LUMENS). 'F2' FIXTURES SHALL BE LIKE FINELITE #HPR–F–2X2–DCO–LED–HO–3500K–120–SC–C1 (NOMINAL 4800 LUMENS). SEE DWG. E101 FOR FURTHER INFORMATION, REGARDING CONTROLS. MAJORITY OF 'F1' FIXTURES SHALL BE DIMMED. FIXTURES SHALL HAVE A 10 YEAR WARRANTY.

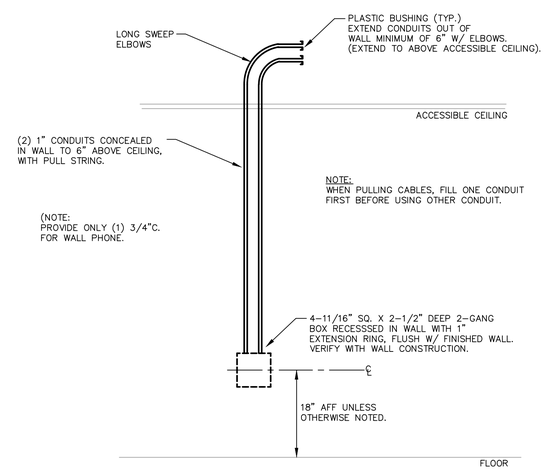

TECHNOLOGY OUTLET ROUGH-IN DETAIL

NO SCALE

DANIEL E. DIMOND
REGISTERED
No. 60910351
STATE OF INDIANA
PROFESSIONAL ENGINEER

INDIANA STATE UNIVERSITY
DA #13052

R.E. Dimond and Associates, Inc.
Consulting Engineers
732 North Capitol Avenue
Indianapolis, IN 46204
Phone (317) 634-6272
Fax (317) 638-8725

UA UNIT I CHILDCARE RENOVATION
MARRIED STUDENT HOUSING

SCHEDULES AND DETAILS - ELECTRICAL

FILENAME:	
PROPERTY NO.:	
REVISIONS	
1.	
2.	
DATE:	05/01/2013
SCALE:	AS SHOWN
DRAWN BY:	D.E.W.
CHECKED BY:	D.E.W.
APPROVED BY:	D.E.D.
PROJECT NO.:	DA #13052

SHEET NO.:
E401