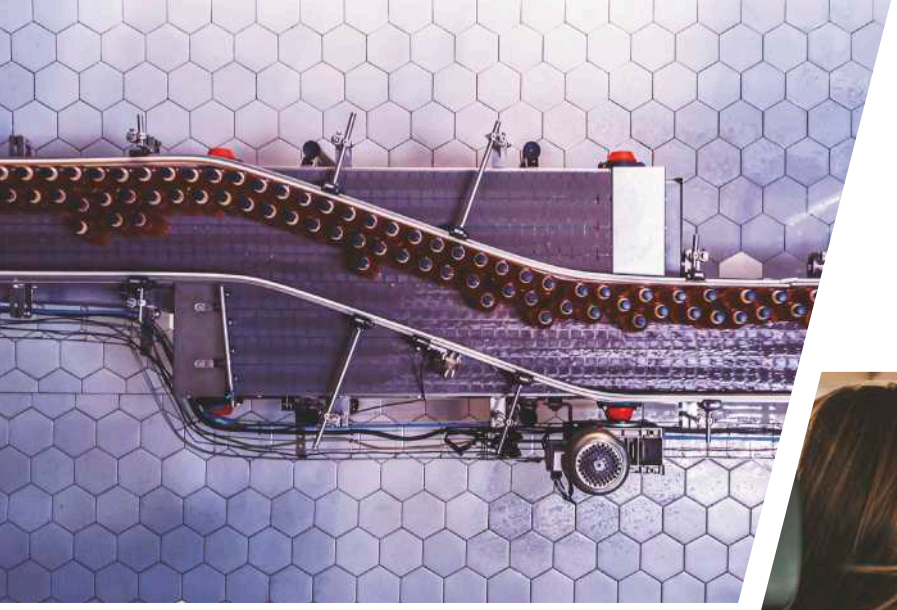

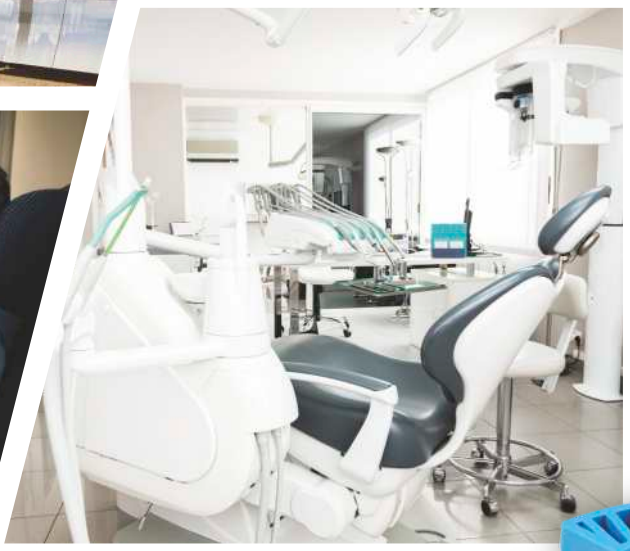

PERFORMANCE IN ALL SHAPES

COLLABORATE. INNOVATE. WORLDWIDE.

GGB EP® RANGE
Engineered Plastics Solutions

The Tribological Solution Provider for Industrial Progress, Regardless of Shape or Material

GGB helps create a world of motion with minimal frictional loss through plain bearing and surface engineering technologies. With R&D, testing and production facilities in the United States, Germany, France, Brazil, Slovakia and China, GGB partners with customers worldwide on customized tribological design solutions that are efficient and environmentally sustainable. GGB's engineers bring their expertise and passion for tribology to a wide range of industries, including automotive, aerospace and industrial manufacturing. To learn more about tribology for surface engineering from GGB, visit www.ggbearings.com.

GGB is an EnPro Industries company (NYSE: NPO).

Our products are used in tens of thousands of critical applications every day on our planet. It is always our goal to provide superior, high-quality solutions for our customers' needs, no matter where those demands take our products. From space vehicles to golf carts and virtually everything in between; we offer the industry's most extensive range of high performance, maintenance-free bearing solutions for a multitude of applications:

- Aerospace
- Agricultural
- Automotive
- Railway
- Industrial
- Primary Metals
- Recreation
- Construction
- Oil & Gas
- Energy
- Fluid Power
- Medical

The GGB Advantage

LOWER SYSTEM COST

GGB bearings reduce shaft costs by eliminating the need for hardening and machining grease paths. Their compact, one-piece construction provides space and weight savings and simplifies assembly.

LOW-FRICTION, HIGH WEAR RESISTANCE

Low coefficients of friction eliminate the need for lubrication, while providing smooth operation, reducing wear and extending service life. Low-friction also eliminates the effects of stick-slip or "stiction" during start up.

MAINTENANCE-FREE

GGB bearings are self-lubricating, making them ideal for applications requiring long bearing life without continuous maintenance, as well as operating conditions with inadequate or no lubrication.

ENVIRONMENTAL

Greaseless, lead-free GGB bearings comply with increasingly stringent environmental regulations such as the EU RoHS directive restricting the use of hazardous substances in certain types of electrical and electronic equipment.

CUSTOMER SUPPORT

GGB's flexible production platform and extensive supply network assure quick turnaround and timely deliveries. In addition, we offer local applications engineering and technical support.

The Highest Standards in Quality

SAFETY

Our deep-rooted culture of safety places a relentless focus on creating a secure, healthy work environment for all. As one of our core values, safety is essential for us to achieve our goal of having the safest employees in the industry.

EXCELLENCE

Our world-class manufacturing plants in the United States, Brazil, China, Germany, France, and Slovakia are certified in quality and excellence according to ISO 9001, IATF 16949, ISO 14001, OHSAS 18001, and AS9100D/EN9100. This allows us to access the industry's best practices while aligning our management system with global standards.

For a complete listing of our certifications, please visit our website:
www.ggbearings.com/en/company/certificates

RESPECT

Our teams work together with mutual respect regardless of background, nationality, or function, embracing the diversity of people and learning from one another - after all, with respect comes both individual and group growth.

GGB - Who We Are

GGB'S HISTORY AS THE GLOBAL LEADER IN PLAIN BEARING TECHNOLOGIES DATES BACK MORE THAN 120 YEARS.

Beginning with the founding of Glacier Antifriction Metal Company in 1899 and later introducing the industry-leading DU® bearing in 1965, GGB has continued to create innovative technologies and solutions that improve safety, performance, and profitability in a wide range of markets. Today, our products can be found everywhere - from scientific vessels at the bottom of the ocean to racecars speeding down the tarmac to jumbo jets slicing through the sky to the Curiosity rover exploring the surface of Mars.

Throughout our history, safety, excellence, and respect have formed the foundational values for the entire GGB family. They are of paramount importance as we seek to maximize personal possibility, achieve excellence, and establish open, creative work environments

Table of Contents





INTRODUCTION

EP®, KA and Multilube Bearing Material

The more demanding specifications of today's high-performance equipment and systems require bearings that can reliably operate under extreme conditions with minimal maintenance and lower operating costs. Through unparalleled research and development, and worldwide engineering support, our EP® materials offer a nearly limitless variety of configurations and styles, and a wide range of applications, because of our diversity of raw materials made of resins compounded with reinforcing fibers and solid lubricant. Providing excellent wear resistance and low friction in both dry and lubricated operating conditions, they exhibit excellent dimensional stability, low coefficients of friction, high compressive strength and creep resistance, low thermal expansion, and good thermal conductivity.

For example, our **EP®15** solar plastics bushings are designed to withstand the demanding conditions and UV rays of the commercial solar power industry with a temperature range of -40 through 125 °C, while our **EP®73** bearings are used in the automotive and aerospace industries as they offer weight savings for turbojet engines.

A Partnership for Success

At GGB, we know there's no "one-size-fits-all" approach to efficiency. We're continually looking for new ways to tailor our products to meet a wide variety of applications - and these efforts are routinely met with outstanding results. Here are a few industries we've adapted our solutions for:

CYCLING EQUIPMENT

GGB plain bearings are better suited for cycling equipment than ball and roller bearings, which are subject to brinelling damage under high loads.

TRANSMISSIONS

GGB bushings and washers are widely used in manual, automatic, double-clutch, and continuously variable transmissions.

SOLAR POWER

GGB solutions that are optimized for solar applications offer mechanical characteristics that support smooth tracking with reduced wear, lower operational costs, and increased system performance.

A commitment to offering comprehensive solutions that meet your needs from the project onset to completion - that's what really sets us apart. As we continue to focus on the growth of our EP® product line, one of our top priorities is supporting our customers through world-class service.

The following stories prove that GGB has more to offer than just superior engineering solutions - we're your partner.

AWNINGS & PERGOLAS

We collaborated with an awning and pergola designer and manufacturer to replace a previous solution on an awning application. DP4-B was used for compression resistance and EP®43 was leveraged for a pergola application - and it was all accomplished at a competitive price.

HAND TOWEL DISPENSERS

Working alongside a major manufacturer of hand towel dispensers and other hygiene products, we managed to create a simple application that decreased friction and had low moisture absorption.

FOLDING BICYCLES

Working with a leader in folding bikes manufacturing, we enhanced a product while decreasing costs. In addition to improving the main fold of the crossbar and brake lever, we tested applications to better support the bike when folded and dragging behind a person.

AUTOMOTIVE DOOR HINGES

For use in an automotive rear-door hinge, we worked directly with manufacturers to quickly produce the EP®44 at a nearby location. Through our active approach, convenience of location, and willingness to collaborate on solutions, we continue to carry on a fulfilling partnership.

WATER PUMPS

Water pumps depend on mechanical security to ensure consistent, reliable performance. Working alongside multiple organizations, we achieved this objective while improving efficiency. Our team considered the full water pump assembly when determining a solution - and we determined a softer bearing material was necessary due to the hard housing materials surrounding it. We developed a special EP®30 injection molded plastic solution, ensuring the material remained rugged, yet flexible enough, for reliability. This improvement allows it to perform better in elastohydrodynamic applications.

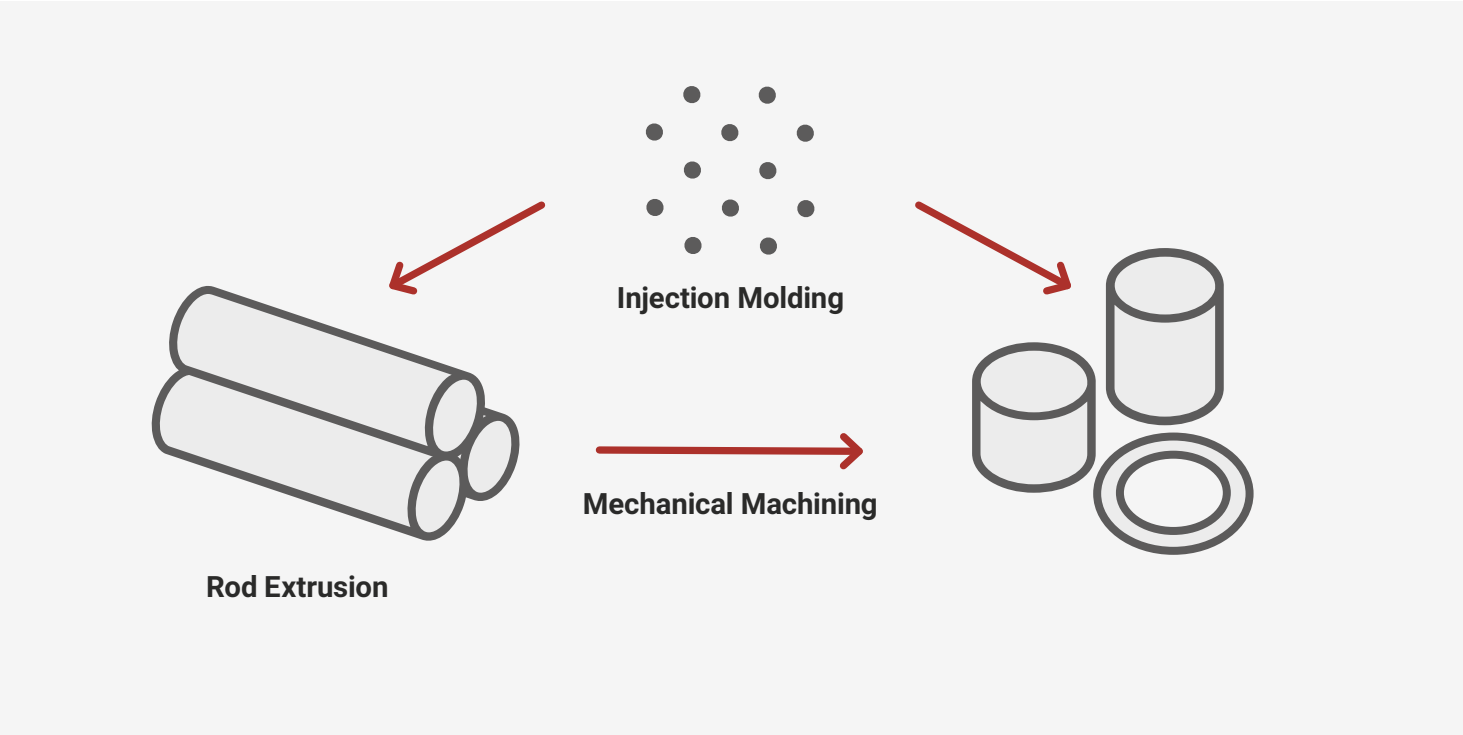

RECOMMENDED MARKET APPLICATIONS

EP® bearings are perfectly suited for a wide range of applications, such as:

- Agricultural
- Chemical processing
- Material handling
- Electronics assembly
- Food processing
- Gaming
- Medical
- Office
- Packaging
- Scientific
- Sports & recreation
- Textile
- Transportation
- Apparatus engineering
- Household appliances
- Furniture
- Industrial fittings
- Slot machines
- Automatic gears
- Pumps
- Turbo compressor sealing
- Piston rings
- Valves
- Industrial ovens
- Compressor blades for turbojet engines

CHARACTERISTICS

The EP® range has the following advantages:

- Design freedom
- Better corrosion resistance
- Accommodates edge loading
- Less weight
- Tribological characteristics without significant change within wear depth
- Integration of additional design features
- Greater wear depth

BENEFITS OF THE EP® SERIES

EP®

- Great price-to-performance ratio
- Corrosion-resistant in humid environments

EP®22

- Great price-to-performance ratio
- Corrosion-resistant in humid environments

EP®44

- Great price-to-performance ratio in high temperature environments
- Corrosion-resistant in humid environments

EP®73

- Corrosion-resistant in humid environments
- Excellent dimensional stability

EP®12

- Great price-to-performance ratio
- Corrosion-resistant in humid environments

EP®30

- Great in hydrodynamic applications
- Good price-to-performance ratio

EP®63

- High-temperature resistance
- Great chemical resistance

EP®79

- Excellent dimensional stability, flow erosion, and cavitation resistance
- Excellent bearing performance in fully-lubricated applications

EP®15

- UV-resistant
- Abrasion-resistant

EP®43

- Low water absorption
- Great chemical resistance

EP®64

- Excellent flow erosion and cavitation resistance
- High-temperature resistance

KA GLACETAL

- Great performance in light-duty working conditions
- Corrosion-resistant in humid environments

MULTILUBE

- Great weight and price performance ratio
- Corrosion-resistant in humid environments

ADVANTAGES OF THE EP® SERIES

- Shaft hardness is not critical because of softness and less-abrasive components
- Great for sealing applications
- Dramatic weight savings compared to rolling element bearings, bronze bushings, and metal-backed competitor bushings
- Maintenance-free dry running operation saves on recurring costs
- Safe operating conditions with no need for additional lubrication
- Robust operating with edge loads, shocks, dirty environment, radiation, and chemicals
- Damping and stick-slip-free properties reduce noise problems
- Injection molding offers flexible design options

PROBLEM SOLVING

The EP® solutions can solve the following application problems:

Housing material: Thermal expansion corrosion

Shaft material: Hardness / roughness / assembly accuracy / edge load

Assembly problems: Overmolding

One-piece construction: Overmolding with low-cost plastic housing / integration of elastomer seal

Shape: Can be used in a variety of applications regardless of shape or material

Wear depth: Homogenious composition for constant tribological bearings properties throughout the wear depth

Friction: Nearly homogeneous, no restricted emergency running properties

Electric: Insulating or conductive

MOISTURE ABSORPTION OF EP® STANDARD RANGE MATERIALS

Every polymer is subject to moisture absorption; i.e., saturation of engineered plastics in a moist/wet environment.

MOISTURE ABSORPTION 23°C AT 50% Relative moisture in accordance with DIN43495	
EP®	0.26%
EP®12	0.2%
EP®22 (PBT+PTFE)	0.06%
EP®30	0.65%
EP®43 (PPS+Aramid+PTFE)	0.05%
EP®44	0.05%
EP®63 (PEEK+Aramid+PTFE)	0.1%
EP®64	<0.1%
EP®73	0.2%
EP®79	0.26%
Glacetal KA	0.2%
Multilube	0.1%

Engineered plastics created from thermoplastic bearing material are processed by injection molding.
This method enables us to produce unlimited dimensions while satisfying our standards.

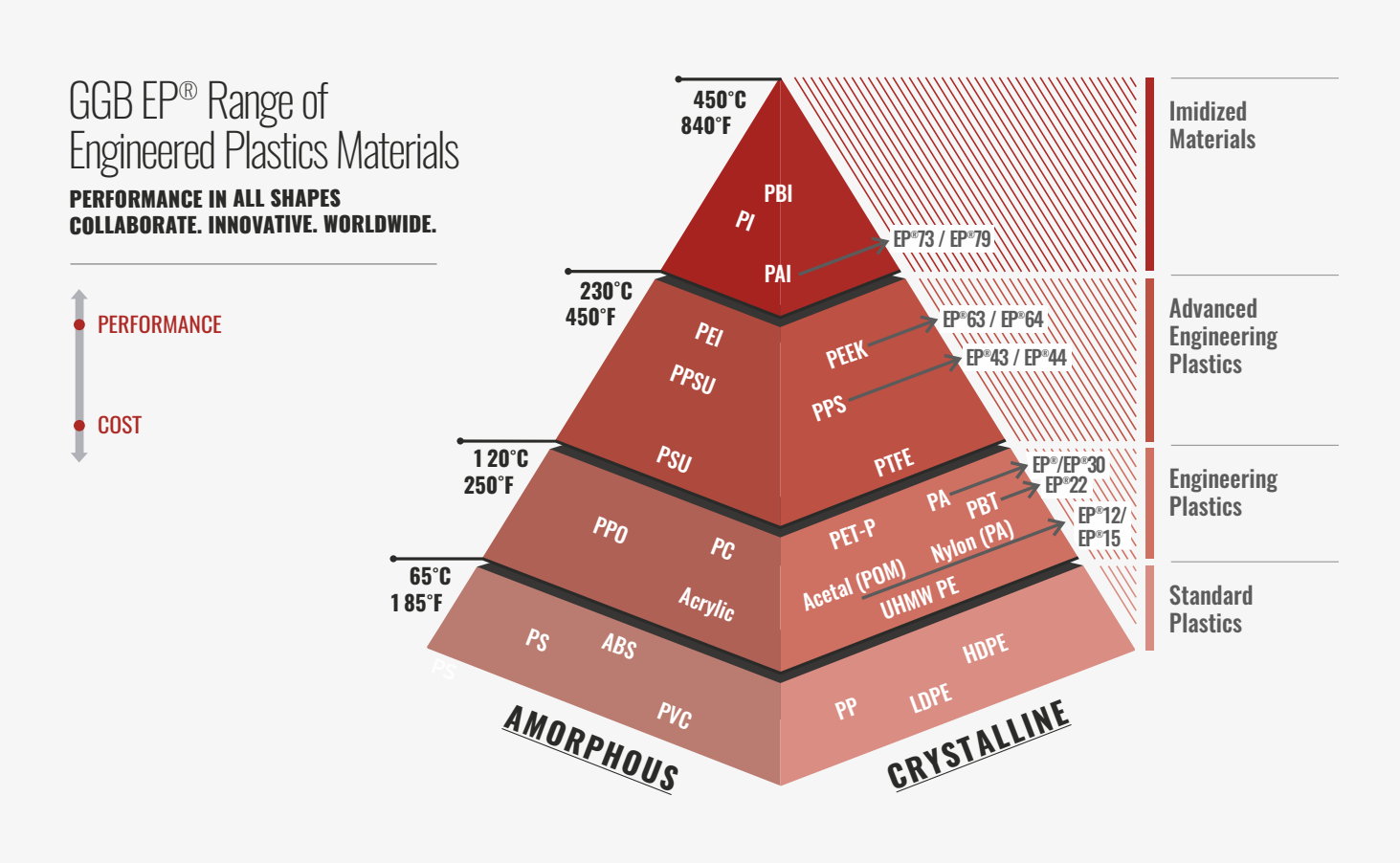

CHEMICAL RESISTANCE OVERVIEW

The resistance overviews below are specific to the basic compounds and their additives.

PA6.6 (EP®, EP30®)	Resistant to solvents, oils, greases, gasoline, benzene, weak alkalis, esters, ketones, and water. Not resistant to acids and strong alkalis. Natural dyes, such as tea, coffee, and fruit juices, can stain.
PA6.6T (EP®)	Resistant to solvents, oils, greases, gasoline, benzene, weak alkalis, esters, ketones, and water. Not resistant to acids and strong alkalis. Natural dyes, such as tea, coffee, and fruit juices, can stain.
POM (EP®12, EP®15)	POM is stable against alkaline lye, as well as against gasoline, diesel and oils, alcohols, aromatics such as benzene, and many other solvents.
PBT (EP®22)	Resistant to water, aqueous solutions (at room temperature), weak acids, many organic solvents, oils, greases, brake fluid, and carbon tetrachloride. Not resistant to strong acids, bases, phenol, ethyl acetate, acetone. Prolonged contact with water at 60°C leads to hydrolytic degradation.
PPS (EP®43, EP®44)	Resistant to diluted mineral acids, alkalis, aliphatic and aromatic hydrocarbons, ketones, alcohols, chlorinated hydrocarbons, oils, greases, and water hydrolysis. Not resistant to chlorosulfonic acid. Constant contact with hot water or hot aqueous solutions can lead to a deterioration of the physical properties lead by hydrolysis.
PEEK (EP®63, EP®64)	Resistant to diluted mineral acids, alkalis, aliphatic and aromatic hydrocarbons, ketones, alcohols, chlorinated hydrocarbons, oils, greases, and water hydrolysis. Not resistant to chlorosulfonic acid. Constant contact with hot water or hot aqueous solutions can lead to a deterioration of the physical properties lead by hydrolysis.
Graphite (EP®)	Resistant to many acids and bases, alkali, solvents, ammonia, water, salts, and oxidants. Not resistant to concentrated sulfuric acid, nitric acid, chromic acid, chlorosulfonic acid, liquid bromine, and sodium chlorite.
Glass Fiber (EP®)	Resistant to most chemicals. Acids dissolve certain atoms from the glass surface which leads to embrittlement. Alkalis dissolve the glass surface slowly.
Aramid Fiber (EP®43, EP®63)	Resistant to most chemicals. Not resistant to hot concentrated acids and alkalis such as 60% sulfuric acid and 50% sodium hydroxide.
Carbon Fiber (EP®44, EP®64)	Excellent chemical resistance, high resistance to acids, alkalis and organic solvents.
PAI (EP®73, EP®79)	Good general chemical resistance, high chemical resistance especially to strong acids and many organic solvents.

EP® Bearing Material

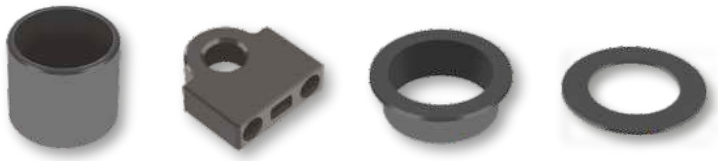

SELF-LUBRICATING ENGINEERED PLASTIC BEARINGS

CHARACTERISTICS

- Good bearing performance in dry working conditions
- Good bearing performance in lubricated or marginally lubricated applications
- Corrosion-resistant in humid/saline environments
- Very good price performance ratio
- Very good weight performance ratio
- Within injection moulding tool feasibility unlimited dimensions and design features
- Compliant to ELV, WEEE and RoHS specifications

AVAILABILITY

Bearing forms available in standard dimensions:

- Plain cylindrical bushes
- Plain flanged bushes

Bearing forms made-to-order: Standard forms in special dimensions, thrust washers, half-bearings, sliding plates, customized bearing designs

APPLICATIONS

General: Generally applicable within the limits of the material properties

Industrial: Medical equipment, awnings and blinds, scientific equipment, gaming equipment, office equipment, etc.

MICROSECTION

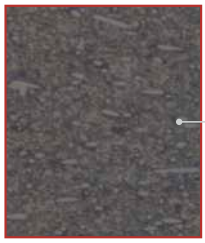

OPERATING PERFORMANCE	
Dry	Good
Oil lubricated	Good
Grease lubricated	Good
Water lubricated	Fair
Process fluid lubricated	Good after resistance testing

FOR SUPERIOR PEFORMANCE	
Water lubricated	EP22

BEARING PROPERTIES		IMPERIAL UNITS	IMPERIAL VALUE	METRIC UNITS	METRIC VALUE
GENERAL					
Maximum load, p	Static Dynamic	psi psi	12 000 6 000	N/mm^2 N/mm^2	80 40
Operating temperature	Min Max	°F °F	-40 284	°C °C	-40 140
Coefficient of linear thermal expansion		10^{-6}/F	12	10^{-6}/K	22
DRY					
Maximum sliding speed, U		fpm	200	m/s	1.0
Maximum pU factor	for A_H/A_C = 5 for A_H/A_C = 10 for A_H/A_C = 20	psi x fpm psi x fpm psi x fpm	1 700 6 800 28 600	N/mm^2 x m/s N/mm^2 x m/s N/mm^2 x m/s	0.06 0.24 1.00
Coefficient of friction, f			0.15 - 0.3		0.15 - 0.3
RECOMMENDATIONS					
Shaft surface roughness, Ra		µin	8 - 32	µm	0.2 - 0.8
Shaft surface hardness			> 200 HV		

EP®12 Bearing Material

SELF-LUBRICATING ENGINEERED PLASTIC BEARINGS

CHARACTERISTICS

- Good bearing performance in dry working conditions
- Good bearing performance in lubricated or marginally lubricated applications
- Corrosion-resistant in humid/saline environments
- Very good price performance ratio
- Very good weight performance ratio
- Within injection moulding tool feasibility unlimited dimensions and design features
- Compliant to ELV, WEEE and RoHS specifications

AVAILABILITY

Bearing forms made-to-order: Cylindrical bushes, flanged bearings, thrust washers, sliding plates, half-bearings, customized bearing designs

APPLICATIONS

General: Generally applicable within the limits of the material properties

Industrial: Domestic appliances, furniture, office equipment, sports equipment and many more

MICROSECTION

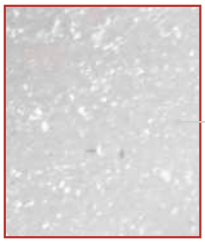

OPERATING PERFORMANCE	
Dry	Very good
Oil lubricated	Good
Grease lubricated	Good
Water lubricated	Fair
Process fluid lubricated	Good after resistance testing

FOR SUPERIOR PEFORMANCE	
Water lubricated	EP22

BEARING PROPERTIES		IMPERIAL UNITS	IMPERIAL VALUE	METRIC UNITS	METRIC VALUE
GENERAL					
Maximum load, p	Static	psi	9 500	N/mm²	65
Operating temperature	Min Max	°F °F	-40 257	°C °C	-40 125
Coefficient of linear thermal expansion		10^{-6}/F	67	10^{-6}/K	120
DRY					
Maximum sliding speed, U		fpm	200	m/s	1.0
Maximum pU factor	for A_H/A_C = 5 for A_H/A_C = 10 for A_H/A_C = 20	psi x fpm psi x fpm psi x fpm	1 100 2 500 5 100	N/mm² x m/s N/mm² x m/s N/mm² x m/s	0.04 0.09 0.18
Coefficient of friction, f			0.18 - 0.3		0.18 - 0.3
RECOMMENDATIONS					
Shaft surface roughness, Ra		µin	4 - 20	µm	0.1 - 0.5
Shaft surface hardness			> 200 HV		

EP®15 Bearing Material

UV-RESISTANT BEARINGS FOR SUN & OUTDOOR APPLICATIONS

CHARACTERISTICS

- UV-resistant bearings
- Abrasion-resistant
- Lightweight
- Low coefficient of friction
- Very good bushing performance in dry working conditions
- Good bushing performance in lubricated or marginally lubricated applications
- Corrosion-resistant in humid/ saline environments
- Very good price performance ratio
- Very good weight performance ratio
- Within injection molding tool feasibility unlimited dimensions and design features
- Compliant to ELV, WEEE and RoHS specifications

AVAILABILITY

EP®15 Bearing forms made-to-order: Cylindrical bushings, flanged bushings, thrust washers, sliding plates, half-bushings, customized bearing designs

APPLICATIONS

Solar Power Equipment, Outdoor Applications, Recreational Applications

EP®15
ENGINEERED FOR SUN

MICROSECTION

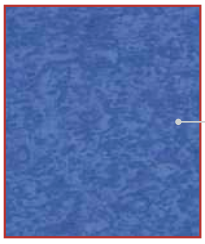

OPERATING PERFORMANCE	
Dry	Very good
Oil lubricated	Good
Grease lubricated	Good
Water lubricated	Fair
Process fluid lubricated	Good after resistance testing

BEARING PROPERTIES	STANDARD	UNITS	VALUE
CHARACTERISTICS			
Charpy unnotched impact strength	ISO 179/1eU	kJ/m^2	45
Charpy notched impact strength	ISO 179/1eA	kJ/m^2	4.5
Coefficient of linear thermal expansion	ISO 11359-2:1999-10	$x10^{-6}$	120
Minimum temperature		°C / °F	- 40 / - 40
Maximum temperature		°C / °F	125 / 260
Maximum extended temperature limit		°C / °F	125 / 260
Density	DIN EN ISO 1183-1 :2013-04 DIN EN ISO 1183-2 :2004-10	g/cm^3	1.50
Tensile strength	DIN EN ISO 527-1 :2012-06 DIN EN ISO 527-2 :2012-06 DIN EN ISO 527-3 :2003-07	N/mm^2 / psi	50 / 7252
Elastic modulus in tension	DIN EN ISO 178:2013-09 DIN EN ISO 527-1:2012-06 DIN EN ISO 604:2003-12	N/mm^2 / psi	2750 / 398854
Maximum static load		N/mm^2 / psi	65 / 9500
Coefficient of friction, f			0.09 - 0.15
Color			Blue

EP®22 Bearing Material

SELF-LUBRICATING ENGINEERED PLASTIC BEARINGS

CHARACTERISTICS

- Good bearing performance in dry working conditions
- Very good bearing performance in lubricated or marginally lubricated applications
- Corrosion-resistant in humid/saline environments
- Very good price performance ratio
- Very good weight performance ratio
- Within injection moulding tool feasibility unlimited dimensions and design features
- Compliant to ELV, WEEE and RoHS specifications

AVAILABILITY

Bearing forms available in standard dimensions:

- Plain cylindrical bushes
- Plain flanged bushes

Bearing forms made-to-order: Standard forms in special dimensions, thrust washers, half-bearings, sliding plates, customized bearing designs

APPLICATIONS

General: Generally applicable within the limits of the material properties

Industrial: Domestic appliances, chemical equipment, office equipment, sports equipment and many more

MICROSECTION

OPERATING PERFORMANCE	
Dry	Very good
Oil lubricated	Good
Grease lubricated	Good
Water lubricated	Very good
Process fluid lubricated	Good after resistance testing

BEARING PROPERTIES		IMPERIAL UNITS	IMPERIAL VALUE	METRIC UNITS	METRIC VALUE
GENERAL					
Maximum load, p	Static	psi	7 000	N/mm^2	50
Operating temperature	Min Max	°F °F	-60 340	°C °C	-50 170
Coefficient of linear thermal expansion		10^{-6}/F	50	10^{-6}/K	90
DRY					
Maximum sliding speed, U		fpm	200	m/s	1.0
Maximum pU factor	for A_H/A_C = 5 for A_H/A_C = 10 for A_H/A_C = 20	psi x fpm psi x fpm psi x fpm	1 400 2 800 5 700	N/mm^2 x m/s N/mm^2 x m/s N/mm^2 x m/s	0.05 0.10 0.20
Coefficient of friction, f			0.22 - 0.37		0.22 - 0.37
RECOMMENDATIONS					
Shaft surface roughness, Ra		µin	4 - 20	µm	0.1 - 0.5
Shaft surface hardness			> 200 HV		

EP®30 Bearing Material

SELF-LUBRICATING ENGINEERED PLASTIC BEARINGS

CHARACTERISTICS

- Good bearing performance in dry working conditions
- Very good bearing performance in lubricated or marginally lubricated applications
- Corrosion-resistant in humid/saline environments
- Very good price performance ratio
- Very good weight performance ratio
- Very good in elasto hydrodynamic applications
- Within injection moulding tool feasibility unlimited dimensions and design features
- Compliant to ELV, WEEE and RoHS specifications

AVAILABILITY

Bearing forms available in standard dimensions:

- Plain cylindrical bushes
- Plain flanged bushes

Bearing forms made-to-order: Standard forms in special dimensions, thrust washers, half-bearings, sliding plates, customized bearing designs

APPLICATIONS

General: Generally applicable within the limits of the material properties

Industrial: Domestic appliances, chemical equipment, office equipment, sports equipment and many more

MICROSECTION

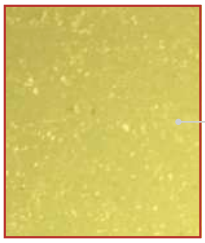

OPERATING PERFORMANCE	
Dry	Very good
Oil lubricated	Good
Grease lubricated	Good
Water lubricated	Very good
Process fluid lubricated	Good after resistance testing

BEARING PROPERTIES		IMPERIAL UNITS	IMPERIAL VALUE	METRIC UNITS	METRIC VALUE
GENERAL					
Maximum load, p	Static	psi	9 500	N/mm^2	65
Operating temperature	Min Max	°F °F	-60 392	°C °C	-50 200
Coefficient of linear thermal expansion		10^{-6}/F	22	10^{-6}/K	40
DRY					
Maximum sliding speed, U		fpm	200	m/s	1.0
Maximum pU factor	for A_H/A_C = 5 for A_H/A_C = 10 for A_H/A_C = 20	psi x fpm psi x fpm psi x fpm	1 400 2 800 5 700	N/mm^2 x m/s N/mm^2 x m/s N/mm^2 x m/s	0.05 0.10 0.20
Coefficient of friction, f			0.08 - 0.16		0.08 - 0.16
RECOMMENDATIONS					
Shaft surface roughness, Ra		µin	4 - 20	µm	0.1 - 0.5
Shaft surface hardness			> 200 HV		

EP®43 Bearing Material

SELF-LUBRICATING ENGINEERED PLASTIC BEARINGS

CHARACTERISTICS

- Good bearing performance in dry working conditions
- Good bearing performance in lubricated or marginally lubricated applications
- Corrosion-resistant in humid/saline environments
- Very good price performance ratio for high temperature applications
- Very good weight performance ratio
- Within injection moulding tool feasibility unlimited dimensions and design features
- Compliant to ELV, WEEE and RoHS specifications

AVAILABILITY

Bearing forms available in standard dimensions:

- Plain cylindrical bushes
- Plain flanged bushes

Bearing forms made-to-order: Standard forms in special dimensions, thrust washers, half-bearings, sliding plates, customized bearing designs

APPLICATIONS

General: Generally applicable within the limits of the material properties

Industrial: Domestic appliances, materials handling equipment, apparatus engineering, slot machines and cash boxes and many more

MICROSECTION

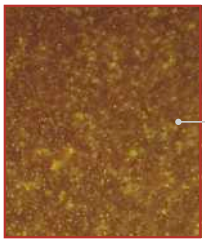

OPERATING PERFORMANCE	
Dry	Very good
Oil lubricated	Good
Grease lubricated	Good
Water lubricated	Very good
Process fluid lubricated	Good after resistance testing

BEARING PROPERTIES		IMPERIAL UNITS	IMPERIAL VALUE	METRIC UNITS	METRIC VALUE
GENERAL					
Maximum load, p	Static	psi	12 000	N/mm^2	83
Operating temperature	Min Max	°F °F	-40 460	°C °C	-40 240
Coefficient of linear thermal expansion		10^{-6}/F	25	10^{-6}/K	45
DRY					
Maximum sliding speed, U		fpm	200	m/s	1.0
Maximum pU factor	for A_H/A_C = 5 for A_H/A_C = 10 for A_H/A_C = 20	psi x fpm psi x fpm psi x fpm	2 600 25 700 102 000	N/mm^2 x m/s N/mm^2 x m/s N/mm^2 x m/s	0.22 0.90 3.59
Coefficient of friction, f			0.11 - 0.2		0.11 - 0.2
RECOMMENDATIONS					
Shaft surface roughness, Ra		µin	8 - 32	µm	0.2 - 0.8
Shaft surface hardness			> 200 HV		

EP®44 Bearing Material

SELF-LUBRICATING ENGINEERED PLASTIC BEARINGS

CHARACTERISTICS

- Good bearing performance in dry working conditions
- Good bearing performance in lubricated or marginally lubricated applications
- Corrosion-resistant in humid/saline environments
- Very good price performance ratio for high temperature applications
- Very good weight performance ratio
- Within injection moulding tool feasibility unlimited dimensions and design features
- Compliant to ELV, WEEE and RoHS specifications

AVAILABILITY

Bearing forms made-to-order: Cylindrical bushings, flanged bearings, thrust washers, sliding plates, half-bearings, customized bearing designs

APPLICATIONS

General: Generally applicable within the limits of the material properties

Industrial: Domestic appliances, valve technology, electronics assembly, apparatus engineering and many more

MICROSECTION

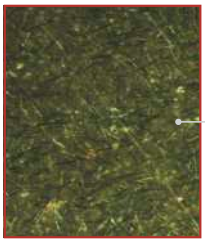

OPERATING PERFORMANCE	
Dry	Good
Oil lubricated	Very good
Grease lubricated	Very good
Water lubricated	Very good
Process fluid lubricated	Good after resistance testing

BEARING PROPERTIES		IMPERIAL UNITS	IMPERIAL VALUE	METRIC UNITS	METRIC VALUE
GENERAL					
Maximum load, p	Static	psi	14 000	N/mm^2	95
Operating temperature	Min Max	°F °F	-40 460	°C °C	-40 240
Coefficient of linear thermal expansion		10^{-6}/F	15	10^{-6}/K	27
DRY					
Maximum sliding speed, U		fpm	200	m/s	1.0
Maximum pU factor	for A_H/A_C = 5 for A_H/A_C = 10 for A_H/A_C = 20	psi x fpm psi x fpm psi x fpm	3 100 12 000 48 300	N/mm^2 x m/s N/mm^2 x m/s N/mm^2 x m/s	0.11 0.42 1.69
Coefficient of friction, f			0.16 - 0.26		0.16 - 0.26
RECOMMENDATIONS					
Shaft surface roughness, Ra		µin	8 - 32	µm	0.2 - 0.8
Shaft surface hardness			> 450 HV		

EP®63 Bearing Material

SELF-LUBRICATING ENGINEERED PLASTIC BEARINGS

CHARACTERISTICS

- Good bearing performance in dry working conditions
- Good bearing performance in lubricated or marginally lubricated applications
- Corrosion-resistant in humid/saline environments
- Suitable for very high temperature applications
- Very good weight performance ratio
- Within injection moulding tool feasibility unlimited dimensions and design features
- Compliant to ELV, WEEE and RoHS specifications

AVAILABILITY

Bearing forms available in standard dimensions:

- Plain cylindrical bushes
- Plain flanged bushes

Bearing forms made-to-order: Standard forms in special dimensions, thrust washers, half-bearings, sliding plates, customized bearing designs

APPLICATIONS

General: Generally applicable within the limits of the material properties

Industrial: Domestic appliances, valve technology, electronics assembly, agricultural machinery and many more

MICROSECTION

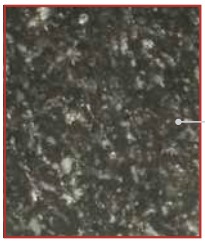

OPERATING PERFORMANCE	
Dry	Good
Oil lubricated	Good
Grease lubricated	Good
Water lubricated	Fair
Process fluid lubricated	Good after resistance testing

FOR SUPERIOR PEFORMANCE	
Water lubricated	EP64

BEARING PROPERTIES		IMPERIAL UNITS	IMPERIAL VALUE	METRIC UNITS	METRIC VALUE
GENERAL					
Maximum load, p	Static	psi	13 000	N/mm^2	90
Operating temperature	Min Max	°F °F	-150 550	°C °C	-100 290
Coefficient of linear thermal expansion		10^{-6}/F	28	10^{-6}/K	50
DRY					
Maximum sliding speed, U		fpm	200	m/s	1.0
Maximum pU factor	for A_H/A_C = 5 for A_H/A_C = 10 for A_H/A_C = 20	psi x fpm psi x fpm psi x fpm	4 500 18 800 75 200	N/mm^2 x m/s N/mm^2 x m/s N/mm^2 x m/s	0.16 0.66 2.63
Coefficient of friction, f			0.12 - 0.21		0.12 - 0.21
RECOMMENDATIONS					
Shaft surface roughness, Ra		µin	4 - 20	µm	0.1 - 0.5
Shaft surface hardness			> 200 HV		

EP®64 Bearing Material

SELF-LUBRICATING ENGINEERED PLASTIC BEARINGS

CHARACTERISTICS

- Good bearing performance in lubricated or marginally lubricated applications
- Excellent flow erosion and cavitation resistance
- Corrosion-resistant in humid/saline environments
- Suitable for very high temperature applications
- Very good weight performance ratio
- Within injection moulding tool feasibility unlimited dimensions and design features
- Compliant to ELV, WEEE and RoHS specifications

AVAILABILITY

Bearing forms made-to-order: Cylindrical bushes, flanged bearings, thrust washers, sliding plates, half-bearings, customized bearing designs

APPLICATIONS

General: Generally applicable within the limits of the material properties

Industrial: Domestic appliances, transportation equipment, apparatus engineering, conveyor equipment and many more

MICROSECTION

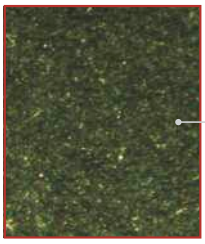

OPERATING PERFORMANCE	
Dry	Good
Oil lubricated	Very good
Grease lubricated	Very good
Water lubricated	Good
Process fluid lubricated	Good after resistance testing

BEARING PROPERTIES		IMPERIAL UNITS	IMPERIAL VALUE	METRIC UNITS	METRIC VALUE
GENERAL					
Maximum load, p	Static	psi	18 000	N/mm^2	125
Operating temperature	Min Max	°F °F	-150 550	°C °C	-100 290
Coefficient of linear thermal expansion		10^{-6}/F	8	10^{-6}/K	14
DRY					
Maximum sliding speed, U		fpm	200	m/s	1.0
Maximum pU factor	for A_H/A_C = 5 for A_H/A_C = 10 for A_H/A_C = 20	psi x fpm psi x fpm psi x fpm	2 500 10 000 40 000	N/mm^2 x m/s N/mm^2 x m/s N/mm^2 x m/s	0.09 0.35 1.40
Coefficient of friction, f			0.3 - 0.5		0.3 - 0.5
RECOMMENDATIONS					
Shaft surface roughness, Ra		µin	4 - 20	µm	0.1 - 0.5
Shaft surface hardness			> 450 HV		

EP®73 Bearing Material

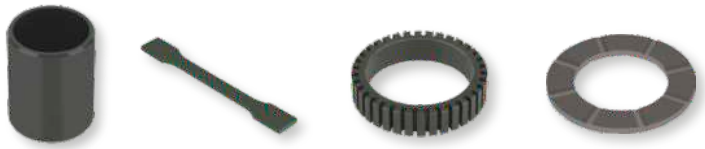

SELF-LUBRICATING ENGINEERED PLASTIC BEARINGS

CHARACTERISTICS

- Good bearing performance in dry working conditions
- Good bearing performance in lubricated or marginally lubricated applications
- Corrosion-resistant in humid/saline environments
- Very good dimensional stability
- Very good weight performance ratio
- Within injection moulding tool feasibility unlimited dimensions and design features
- Compliant to ELV, WEEE and RoHS specifications

AVAILABILITY

Bearing forms made-to-order: Cylindrical bushes, flanged bearings, thrust washers, sliding plates, half-bearings, customized bearing designs

APPLICATIONS

General: Generally applicable within the limits of the material properties

Automotive: Automatic gears, pumps, sealing in turbo compressors, piston rings, valve seats, sealings

Industrial: Continuous furnaces, drying furnaces for coating, textile machines and many more

Aerospace: Weight saving by replacement of aluminum or metal alloys, while providing superior stability and viscosity. Applicable in extreme high and low temperatures e.g. turbojet engine compressor blade

MICROSECTION

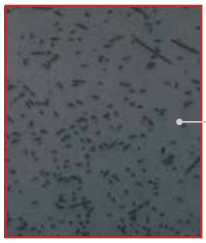

OPERATING PERFORMANCE	
Dry	Good
Oil lubricated	Good
Grease lubricated	Good
Water lubricated	Fair
Process fluid lubricated	Good after resistance testing

FOR SUPERIOR PEFORMANCE	
Water lubricated	EP64

BEARING PROPERTIES		IMPERIAL UNITS	IMPERIAL VALUE	METRIC UNITS	METRIC VALUE
GENERAL					
Maximum load, p	Static	psi	15 000	N/mm^2	105
Operating temperature	Min Max	°F °F	-330 500	°C °C	-200 260
Coefficient of linear thermal expansion		10^{-6}/F	14	10^{-6}/K	25
DRY					
Maximum sliding speed, U		fpm	500	m/s	2.5
Maximum pU factor	for A_H/A_C = 5 for A_H/A_C = 10 for A_H/A_C = 20	psi x fpm psi x fpm psi x fpm	2 800 11 100 44 900	N/mm^2 x m/s N/mm^2 x m/s N/mm^2 x m/s	0.10 0.39 1.57
Coefficient of friction, f			0.19 - 0.31		0.19 - 0.31
LUBRICATED					
Maximum sliding speed, U		fpm	1 000	m/s	5.0
RECOMMENDATIONS					
Shaft surface roughness, Ra		µin	8 - 32	µm	0.2 - 0.8
Shaft surface hardness			> 200 HV		

EP®79 Bearing Material

SELF-LUBRICATING ENGINEERED PLASTIC BEARINGS

CHARACTERISTICS

- Excellent flow erosion and cavitation resistance
- Excellent performance in fully lubricated applications
- Corrosion-resistant in humid/saline environments
- Excellent dimensional stability
- Very good weight performance ratio
- Within injection moulding tool feasibility unlimited dimensions and design features
- Compliant to ELV, WEEE and RoHS specifications

AVAILABILITY

Bearing forms made-to-order: Cylindrical bushes, flanged bearings, thrust washers, sliding plates, half-bearings, customized bearing designs

APPLICATIONS

General: Generally applicable within the limits of the material properties

Automotive: Automatic gears

Industrial: Domestic appliances, control valves, fittings, textile machines and many more

MICROSECTION

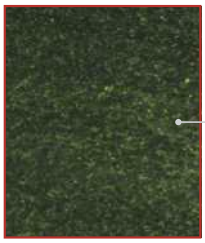

OPERATING PERFORMANCE	
Dry	Not recommended
Oil lubricated	Very good
Grease lubricated	Very good
Water lubricated	Fair
Process fluid lubricated	Good after resistance testing

FOR SUPERIOR PEFORMANCE	
Dry	EP73
Water lubricated	EP64

BEARING PROPERTIES		IMPERIAL UNITS	IMPERIAL VALUE	METRIC UNITS	METRIC VALUE
GENERAL					
Maximum load, p	Static	psi	19 000	N/mm^2	130
Operating temperature	Min Max	°F °F	-330 500	°C °C	-200 260
Coefficient of linear thermal expansion		10^{-6}/F	5	10^{-6}/K	9
DRY					
Maximum sliding speed, U		fpm	2 000	m/s	10.0
Maximum pU factor		psi x fpm	286 000	N/mm^2 x m/s	10.0
Coefficient of friction, f			0.005 - 0.1		0.005 - 0.1
RECOMMENDATIONS					
Shaft surface roughness, Ra		µin	8 - 32	µm	0.2 - 0.8
Shaft surface hardness			> 500 HV		

FLASH-CLICK® Bearing Material

ENGINEERED PLASTICS DOUBLE FLANGE BEARING ASSEMBLY

CHARACTERISTICS

- Can be used with different housing materials, e.g. aluminium, magnesium, and plastic
- Feasible for a larger variety of housing dimensions, from thin metal sheet housings to multiple and sectional longer housing areas
- Reduced total system costs with increased housing tolerances, even stamped or laser burned housings are suitable
- Manual and automated installation possible

AVAILABILITY

Non-standard parts made-to-order

APPLICATIONS

General: Generally applicable within the limits of the material properties

Industrial: Domestic appliances, materials handling equipment, apparatus engineering, slot machines and cash boxes, and many more

KA Glacetal Bearing Material

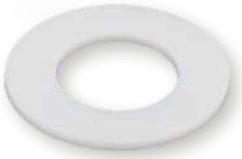

ENGINEERED PLASTIC THRUST WASHERS

CHARACTERISTICS

- Good bearing performance in light duty working conditions
- Good performance in lubricated or marginally lubricated applications
- Corrosion-resistant in humid/saline environments
- Very good price performance ratio
- Very good weight performance ratio

AVAILABILITY

Bearing forms available in standard dimensions:

- Plain thrust washers

Non standard parts made-to-order

APPLICATIONS

Industrial: Thrust washers are used as axial bearings in conjunction with all cylindrical bushes according to ISO 3547 to prevent metal-to-metal contact and fretting damage

MICROSECTION

OPERATING PERFORMANCE	
Dry	Fair
Oil lubricated	Good
Grease lubricated	Good
Water lubricated	Fair
Process fluid lubricated	Fair

FOR SUPERIOR PEFORMANCE	
Dry	EP22
Water lubricated	EP22
Process fluid lubricated	EP22

BEARING PROPERTIES		IMPERIAL UNITS	IMPERIAL VALUE	METRIC UNITS	METRIC VALUE
GENERAL					
Maximum load, p	Static Dynamic	psi psi	3 000 1 500	N/mm² N/mm²	20 10
Operating temperature	Min Max	°F °F	-40 180	°C °C	-40 80
GREASED					
Maximum sliding speed, U		fpm	300	m/s	1.5
Maximum pU factor		psi x fpm	10 000	N/mm² x m/s	0.35
Coefficient of friction, f			0.08 - 0.12		0.08 - 0.12
RECOMMENDATIONS					
Shaft surface roughness, Ra		µin	≤ 16	µm	≤ 0.4
Shaft surface hardness	Normal For longer service life		> 200 HB > 350 HB		

Multilube Bearing Material

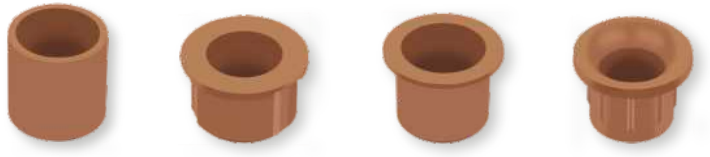

THERMOPLASTIC PLAIN BEARINGS

CHARACTERISTICS

- Good bearing performance in dry working conditions
- Good performance in lubricated or marginally lubricated applications
- Corrosion-resistant in humid/saline environments
- Good price performance ratio
- Very good weight performance ratio
- Within injection moulding tool feasibility unlimited dimensions and design features

AVAILABILITY

Bearing forms made-to-order: Cylindrical bushes, flanged bearings, thrust washers, sliding plates, half-bearings, customized bearing designs

APPLICATIONS

Industrial: Linkages, seat suspensions

MICROSECTION

OPERATING PERFORMANCE	
Dry	Good
Oil lubricated	Good
Grease lubricated	Good
Water lubricated	Fair
Process fluid lubricated	Fair

FOR SUPERIOR PEFORMANCE	
Water lubricated	EP22
Process fluid lubricated	EP22

BEARING PROPERTIES		IMPERIAL UNITS	IMPERIAL VALUE	METRIC UNITS	METRIC VALUE
GENERAL					
Maximum load, p	Static	psi	9 000	N/mm²	60
	Dynamic	psi	4 500	N/mm²	30
Operating temperature	Min	°F	-40	°C	-40
	Max	°F	180	°C	80
	Momentary	°F	250	°C	120
Coefficient of linear thermal expansion		10^{-6}/F	56	10^{-6}/K	101
DRY					
Maximum sliding speed, U		fpm	300	m/s	1.5
Maximum pU factor		psi x fpm	17 000	N/mm² x m/s	0.6
Coefficient of friction, f			0.1 - 0.2		0.1 - 0.2
RECOMMENDATIONS					
Shaft surface roughness, Ra		µin	8 - 32	µm	0.2 - 0.8
Shaft surface hardness	Normal	> 200 HB			
	For longer service life	> 350 HB			

STANDARD DIMENSIONS

EP® Cylindrical Bushes

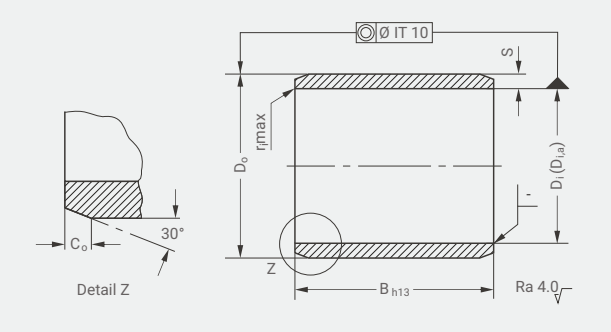

Dimensions [mm], tests, and material in accordance with GGB specification.

Outside chamfers and inside radii

S	C_o	$r_i$max
1.0	0.5	0.1
1.5	0.8	0.2
2.0	0.8	0.2

Recommended tolerance class for shafts H7.

PART NO.	TECHNICAL DATA					
GGB	DIMENSIONS [mm]				INSTALLATION TOLERANCE	
	Inside Ø D_i	Outside Ø D_o	Width B	Weight g	Housing H7	$D_{i,a}$
0505EP	5	7	5	0.1	+0.0150	+0.105 +0.030
0508EP	5	7	8	0.2		
0510EP	5	7	10	0.3		
0606EP	6	8	6	0.2		
0608EP	6	8	8	0.3		
0610EP	6	8	10	0.3		
0806EP	8	10	6	0.2		+0.130 +0.040
0808EP	8	10	8	0.3		
0810EP	8	10	10	0.4		
0812EP	8	10	12	0.5		
0815EP	8	10	15	0.6		
1004EP	10	12	4	0.2	+0.0180	
1006EP	10	12	6	0.3		
1008EP	10	12	8	0.4		
1010EP	10	12	10	0.5		
1015EP	10	12	15	0.7		
1020EP	10	12	20	1.0		
1210EP	12	14	10	0.6		+0.160 +0.050
1212EP	12	14	12	0.7		
1215EP	12	14	15	0.9		
1220EP	12	14	20	1.2		
1415EP	14	16	15	1.0		
1420EP	14	16	20	1.4		
1425EP	14	16	25	1.7		
1515EP	15	17	15	1.1		
1520EP	15	17	20	1.4		
1525EP	15	17	25	1.7		
2015EP	20	23	15	2.2	+0.0210	+0.195 +0.065
2020EP	20	23	20	2.9		
2030EP	20	23	30	4.4		
2515EP	25	28	15	2.7		
2520EP	25	28	20	3.6		
2530EP	25	28	30	5.4		
3020EP	30	34	20	5.8	+0-0250	+0.240 +0.080
3030EP	30	34	30	8.6		
3040EP	30	34	40	11.6		

Other dimensions available on request.
$D_{i,a}$ = Tolerances of internal bush diameter after installation in housing center H7.

EP® Flanged Bushes

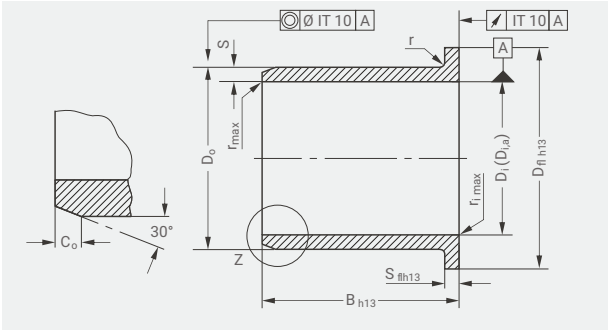

Dimensions [mm], tests, and material in accordance with GGB specification.

Outside chamfers and inside radii

S	C_o	$r_i$max
1.0	0.5	0.1
1.5	0.8	0.2

S	r (mm)
≤ 1	0.3
≥ 1	0.5

Recommended tolerance class for shafts H7.

PART NO.	TECHNICAL DATA							
GGB	DIMENSIONS [mm]						INSTALLATION TOLERANCE	
	Inside Ø D_i	Outside Ø D_o	Flange Ø D_{fl}	Flange Thickness Ø S_{fl}	Width B	Weight g	Housing H7	$D_{i,a}$
BB0505EP	5	7	11	1	5	0.2	+0.0150	+0.105 +0.030
BB0604EP	6	8	12	1	4	0.2		
BB0606EP	6	8	12	1	6	0.3		
BB0608EP	6	8	12	1	8	0.4		
BB0610EP	6	8	12	1	10	0.4		
BB0806EP	8	10	15	1	5.5	0.4		+0.130 +0.040
BB0808EP	8	10	15	1	7.5	0.5		
BB0810EP	8	10	15	1	10	0.5		
BB1007EP	10	12	18	1	7	0.6	+0.0180	
BB1009EP	10	12	18	1	9	0.7		
BB1012EP	10	12	18	1	12	0.8		
BB1015EP	10	12	18	1	15	1.0		
BB1017EP	10	12	18	1	17	1.1		
BB1207EP	12	14	20	1	7	0.6		+0.160 +0.050
BB1209EP	12	14	20	1	9	0.8		
BB1212EP	12	14	20	1	12	1.2		
BB1215EP	12	14	20	1	15	1.3		
BB1217EP	12	14	20	1	17	1.4		
BB1220EP	12	14	20	1	20	1.5		
BB1412EP	14	16	22	1	12	0.9		
BB1417EP	14	16	22	1	17	1.5		
BB1509EP	15	17	23	1	9	1.0		
BB1512EP	15	17	23	1	12	1.2		
BB1517EP	15	17	23	1	17	1.5		
BB1520EP	15	17	23	1	20	1.8		
BB1617EP	16	18	24	1	17	1.7		
BB2012EP	20	23	30	1.5	11.5	2.4	+0.0210	+0.195 +0.065
BB2017EP	20	23	30	1.5	16.5	3.2		
BB2022EP	20	23	30	1.5	21.5	3.9		
BB2512EP	25	28	35	1.5	11.5	2.9		
BB2517EP	25	28	35	1.5	16.5	3.9		
BB2522EP	25	28	35	1.5	21.5	4.9		

Other dimensions available on request.

EP®22 Cylindrical Bushes

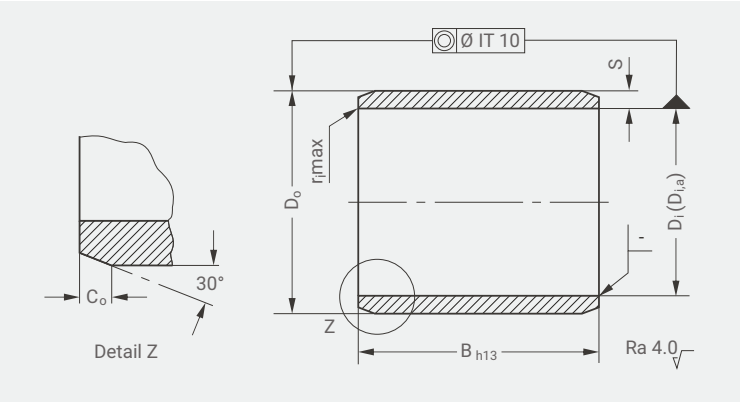

Dimensions [mm], tests, and material in accordance with GGB specification.

Outside chamfers and inside radii

S	C_o	$r_i$max
1.0	0.5	0.2
1.5	0.8	0.3
2.0	0.8	0.3

Recommended tolerance class for shafts H9.

PART NO.	TECHNICAL DATA					
GGB	DIMENSIONS [mm]				INSTALLATION TOLERANCE	
	Inside Ø D_i	Outside Ø D_o	Width B	Weight g	Housing H7	$D_{i,a}$
0806EP22	8	10	6	0.2	+0.0150	+0.083 +0.025
0808EP22	8	10	8	0.3		
0810EP22	8	10	10	0.4		
0812EP22	8	10	12	0.5		
0815EP22	8	10	15	0.6		
1004EP22	10	12	4	0.2	+0.0180	
1006EP22	10	12	6	0.3		
1008EP22	10	12	8	0.4		
1010EP22	10	12	10	0.5		
1015EP22	10	12	15	0.7		
1020EP22	10	12	20	1.0		
1210EP22	12	14	10	0.6		+0.102 +0.032
1212EP22	12	14	12	0.7		
1215EP22	12	14	15	0.9		
1220EP22	12	14	20	1.2		
1410EP22	14	16	10	0.7		
1412EP22	14	16	12	0.9		
1415EP22	14	16	15	1.0		
1420EP22	14	16	20	1.4		
1425EP22	14	16	25	1.7		
1510EP22	15	17	10	0.8		
1515EP22	15	17	15	1.1		
1520EP22	15	17	20	1.4		
1525EP22	15	17	25	1.7		
1610EP22	16	18	10	0.8		
1612EP22	16	18	12	1.0		
1615EP22	16	18	15	1.2		
1620EP22	16	18	20	1.6		
1625EP22	16	18	25	1.8		
1810EP22	18	20	10	0.9	+0.0210	
1815EP22	18	20	15	1.4		
1820EP22	18	20	20	1.8		
1825EP22	18	20	25	2.0		

PART NO.	TECHNICAL DATA					
GGB	DIMENSIONS [mm]				INSTALLATION TOLERANCE	
	Inside Ø D_i	Outside Ø D_o	Width B	Weight g	Housing H7	$D_{i,a}$
2010EP22	20	23	10	1.5	+0.0210	+0.124 +0.040
2015EP22	20	23	15	2.2		
2020EP22	20	23	20	2.9		
2025EP22	20	23	25	3.9		
2030EP22	20	23	30	4.4		
2515EP22	25	28	15	2.7		
2520EP22	25	28	20	3.6		
3010EP22	30	34	10	3.1	+0.0250	
3015EP22	30	34	15	4.6		
3020EP22	30	34	20	6.2		
3030EP22	30	34	30	9.3		
3040EP22	30	34	40	12.4		
4020EP22	40	44	20	8.1		+0.150 +0.050
4025EP22	40	44	25	10.2		
4030EP22	40	44	30	12.2		
4040EP22	40	44	40	16.3		
4050EP22	40	44	50	20.3		
5020EP22	50	55	20	12.7	+0.0380	
5030EP22	50	55	30	19.0		
5040EP22	50	55	40	25.4		
5050EP22	50	55	50	31.7		
5060EP22	50	55	60	38.1		
6020EP22	60	65	20	15.1		
6030EP22	60	65	30	22.7		
6040EP22	60	65	40	30.2		
6060EP22	60	65	60	45.4		
6070EP22	60	65	70	52.9		

Other dimensions available on request.
$D_{i,a}$ = Tolerances of internal bush diameter after installation in housing center H7.

EP®22 Flanged Bushes

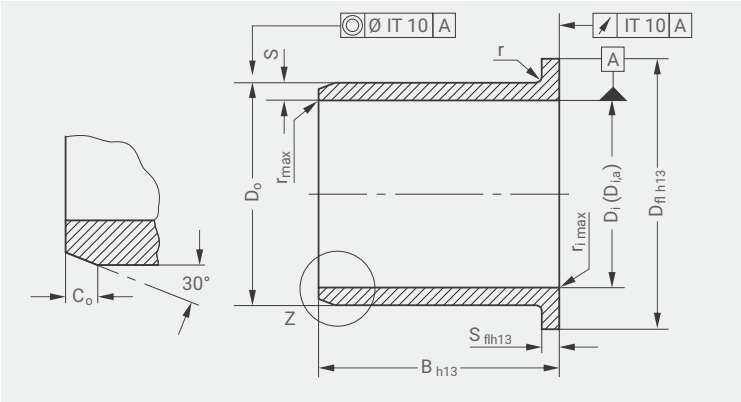

Dimensions [mm], tests, and material in accordance with GGB specification.

Outside chamfers and inside radii

S	C_o	$r_i$max
1.0	0.5	0.1
1.5	0.8	0.2

S	r (mm)
≤ 1	0.3
≥ 1	0.5

Recommended tolerance class for shafts H9.

PART NO.	TECHNICAL DATA							
GGB	DIMENSIONS [mm]						INSTALLATION TOLERANCE	
	Inside Ø D_i	Outside Ø D_o	Flange Ø D_{fl}	Flange Thickness Ø S_{fl}	Width B	Weight g	Housing H7	$D_{i,a}$
BB0806EP22	8	10	15	1.0	5.5	0.4	+0.0150	+0.083 +0.025
BB0808EP22	8	10	15	1.0	7.5	0.5		
BB0810EP22	8	10	15	1.0	10	0.5		
BB1007EP22	10	12	18	1.0	7	0.6	+0.0180	
BB1009EP22	10	12	18	1.0	9	0.7		
BB1012EP22	10	12	18	1.0	12	0.8		
BB1015EP22	10	12	18	1.0	15	1.0		
BB1017EP22	10	12	18	1.0	17	1.1		
BB1207EP22	12	14	20	1.0	7	0.6		+0.102 +0.032
BB1209EP22	12	14	20	1.0	9	0.8		
BB1212EP22	12	14	20	1.0	12	1.2		
BB1215EP22	12	14	20	1.0	15	1.3		
BB1217EP22	12	14	20	1.0	17	1.4		
BB1220EP22	12	14	20	1.0	20	1.5		
BB1412EP22	14	16	22	1.0	12	0.9		
BB1417EP22	14	16	22	1.0	17	1.5		
BB1509EP22	15	17	23	1.0	9	1.0		
BB1512EP22	15	17	23	1.0	12	1.2		
BB1517EP22	15	17	23	1.0	17	1.5		
BB1520EP22	15	17	23	1.0	20	1.8		
BB1612EP22	16	18	24	1.0	12	1.3		
BB1617EP22	16	18	24	1.0	17	1.7		
BB1812EP22	18	20	26	1.0	12	1.4	+0.0210	
BB1817EP22	18	20	26	1.0	17	2.1		
BB2012EP22	20	23	30	1.5	11.5	2.4		+0.124 +0.040
BB2017EP22	20	23	30	1.5	16.5	3.2		
BB2022EP22	20	23	30	1.5	21.5	3.9		
BB2512EP22	25	28	35	1.5	11.5	2.9		
BB2517EP22	25	28	35	1.5	16.5	3.9		
BB2522EP22	25	28	35	1.5	21.5	4.9		
BB3016EP22	30	34	42	2.0	16	6.4	+0.0250	
BB3026EP22	30	34	42	2.0	26	9.5		
BB3040EP22	30	34	42	2.0	40	13.9		
BB4016EP22	40	44	52	2.0	16	8.4		+0.150 +0.050
BB4026EP22	40	44	52	2.0	26	12.4		
BB4050EP22	40	44	52	2.0	50	22.2		
BB5026EP22	50	55	63	2.0	26	18.8	+0.0300	
BB5060EP22	50	55	63	2.0	60	40.4		
BB6050EP22	60	65	73	2.0	50	40.5		
BB6070EP22	60	65	73	2.0	70	55.6		

Other dimensions available on request.

EP®43 Cylindrical Bushes

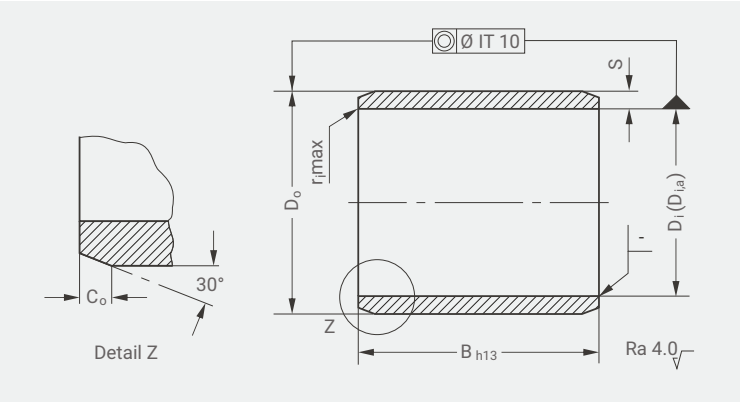

Dimensions [mm], tests, and material in accordance with GGB specification.

Outside chamfers and inside radii

S	C_o	$r_i$max
1.0	0.5	0.2
1.5	0.8	0.3
2.0	0.8	0.3

Recommended tolerance class for shafts H9.

PART NO.	TECHNICAL DATA					
GGB	DIMENSIONS [mm]				INSTALLATION TOLERANCE	
	Inside Ø D_i	Outside Ø D_o	Width B	Weight g	Housing H7	$D_{i,a}$
0806EP43	8	10	6	0.2	+0.0150	+0.071 +0.013
0808EP43	8	10	8	0.3		
0810EP43	8	10	10	0.4		
0812EP43	8	10	12	0.5		
0815EP43	8	10	15	0.6		
1004EP43	10	12	4	0.2	+0.0180	
1006EP43	10	12	6	0.3		
1008EP43	10	12	8	0.4		
1010EP43	10	12	10	0.5		
1015EP43	10	12	15	0.7		
1020EP43	10	12	20	1.0		
1210EP43	12	14	10	0.6		+0.086 +0.016
1212EP43	12	14	12	0.7		
1215EP43	12	14	15	0.9		
1220EP43	12	14	20	1.2		
1415EP43	14	16	15	1.0		
1420EP43	14	16	20	1.4		
1425EP43	14	16	25	1.7		
1515EP43	15	17	15	1.1		
1520EP43	15	17	20	1.4		
1525EP43	15	17	25	1.7		
1625EP43	16	18	25	1.8		
1825EP43	18	20	25	2.0	+0.0210	
2010EP43	20	23	10	1.5		+0.104 +0.020
2015EP43	20	23	15	2.2		
2020EP43	20	23	20	2.9		
2030EP43	20	23	30	4.4		
2515EP43	25	28	15	2.7		
2520EP43	25	28	20	3.6		

EP®43 Flanged Bushes

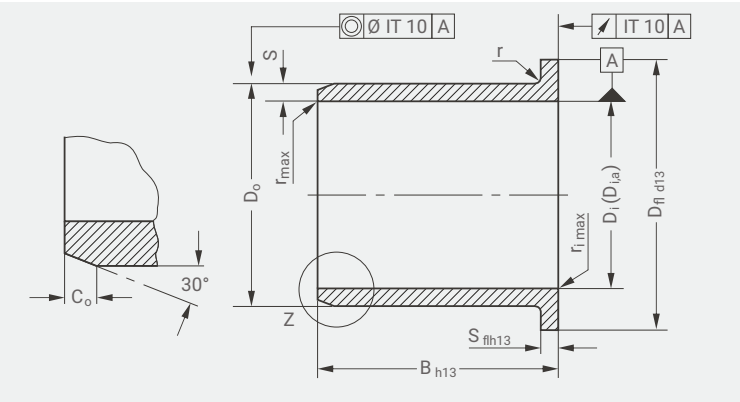

Dimensions [mm], tests, and material in accordance with GGB specification.

Outside chamfers and inside radii

S	C_o	$r_i$max
1.0	0.5	0.1
1.5	0.8	0.2

S	r (mm)
≤ 1	0.3
≥ 1	0.5

Recommended tolerance class for shafts H9.

PART NO.	TECHNICAL DATA							
GGB	DIMENSIONS [mm]						INSTALLATION TOLERANCE	
	Inside Ø D_i	Outside Ø D_o	Flange Ø D_{fl}	Flange Thickness Ø S_{fl}	Width B	Weight g	Housing H7	$D_{i,a}$
BB0806EP43	8	10	15	1.0	5.5	0.4	+0.0150	+0.071 +0.013
BB0808EP43	8	10	15	1.0	7.5	0.5		
BB0810EP43	8	10	15	1.0	10	0.5		
BB1007EP43	10	12	18	1.0	7	0.6	+0.0180	
BB1009EP43	10	12	18	1.0	9	0.7		
BB1012EP43	10	12	18	1.0	12	0.8		
BB1015EP43	10	12	18	1.0	15	1.0		
BB1017EP43	10	12	18	1.0	17	1.1		
BB1207EP43	12	14	20	1.0	7	0.6		+0.086 +0.016
BB1209EP43	12	14	20	1.0	9	0.8		
BB1212EP43	12	14	20	1.0	12	1.2		
BB1215EP43	12	14	20	1.0	15	1.3		
BB1217EP43	12	14	20	1.0	17	1.4		
BB1220EP43	12	14	20	1.0	20	1.5		
BB1412EP43	14	16	22	1.0	12	0.9		
BB1417EP43	14	16	22	1.0	17	1.5		
BB1509EP43	15	17	23	1.0	9	1.0		
BB1512EP43	15	17	23	1.0	12	1.2		
BB1517EP43	15	17	23	1.0	17	1.5		
BB1520EP43	15	17	23	1.0	20	1.8		
BB1617EP43	16	18	24	1.0	17	1.7		
BB2012EP43	20	23	30	1.5	11.5	2.4	+0.0210	+0.104 +0.020
BB2017EP43	20	23	30	1.5	16.5	3.2		
BB2022EP43	20	23	30	1.5	21.5	3.9		
BB2512EP43	25	28	35	1.5	11.5	2.9		
BB2517EP43	25	28	35	1.5	16.5	3.9		
BB2522EP43	25	28	35	1.5	21.5	4.9		

Other dimensions available on request.

EP®63 Cylindrical Bushes

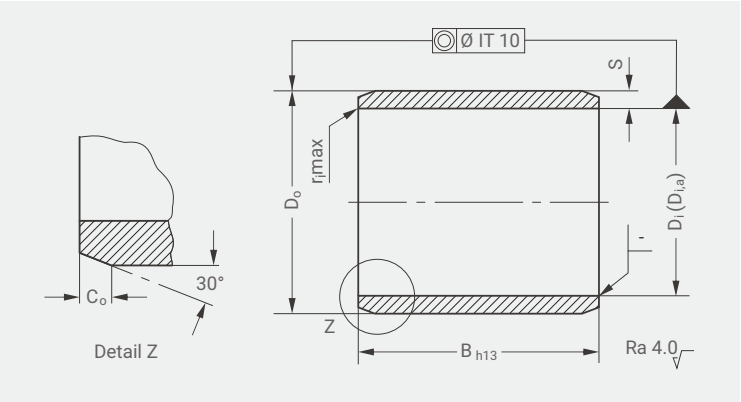

Dimensions [mm], tests, and material in accordance with GGB specification.

Outside chamfers and inside radii

S	C_o	$r_i$max
1.0	0.5	0.2
1.5	0.8	0.3
2.0	0.8	0.3

Recommended tolerance class for shafts H9.

PART NO.	TECHNICAL DATA					
GGB	DIMENSIONS [mm]				INSTALLATION TOLERANCE	
	Inside Ø D_i	Outside Ø D_o	Width B	Weight g	Housing H7	$D_{i,a}$
0806EP63	8	10	6	0.2	+0.0150	+0.071 +0.013
0808EP63	8	10	8	0.3		
0810EP63	8	10	10	0.4		
0812EP63	8	10	12	0.5		
0815EP63	8	10	15	0.6		
1004EP63	10	12	4	0.2	+0.0180	
1006EP63	10	12	6	0.3		
1008EP63	10	12	8	0.4		
1010EP63	10	12	10	0.5		
1015EP63	10	12	15	0.7		
1020EP63	10	12	20	1.0		
1210EP63	12	14	10	0.6		+0.086 +0.016
1212EP63	12	14	12	0.7		
1215EP63	12	14	15	0.9		
1220EP63	12	14	20	1.2		
1415EP63	14	16	15	1.0		
1420EP63	14	16	20	1.4		
1425EP63	14	16	25	1.7		
1515EP63	15	17	15	1.1		
1520EP63	15	17	20	1.4		
1525EP63	15	17	25	1.7		
2010EP63	20	23	10	1.5	+0.0210	+0.104 +0.020
2015EP63	20	23	15	2.2		
2020EP63	20	23	20	2.9		
2030EP63	20	23	30	4.4		
2515EP63	25	28	15	2.7		
2520EP63	25	28	20	3.6		

EP®63 Flanged Bushes

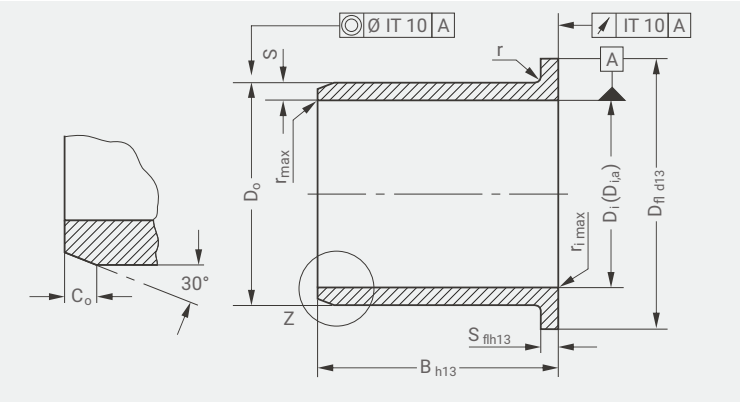

Dimensions [mm], tests, and material in accordance with GGB specification.

Outside chamfers and inside radii

S	C_o	$r_i$max
1.0	0.5	0.1
1.5	0.8	0.2

S	r (mm)
≤ 1	0.3
≥ 1	0.5

Recommended tolerance class for shafts H9.

PART NO.	TECHNICAL DATA							
GGB	DIMENSIONS [mm]						INSTALLATION TOLERANCE	
	Inside Ø D_i	Outside Ø D_o	Flange Ø D_{fl}	Flange Thickness Ø S_{fl}	Width B	Weight g	Housing H7	$D_{i,a}$
BB0806EP63	8	10	15	1.0	5.5	0.4	+0.0150	+0.071 +0.013
BB0808EP63	8	10	15	1.0	7.5	0.5		
BB0810EP63	8	10	15	1.0	10	0.5		
BB1007EP63	10	12	18	1.0	7	0.6	+0.0180	
BB1009EP63	10	12	18	1.0	9	0.7		
BB1012EP63	10	12	18	1.0	12	0.8		
BB1015EP63	10	12	18	1.0	15	1.0		
BB1017EP63	10	12	18	1.0	17	1.1		
BB1207EP63	12	14	20	1.0	7	0.6		+0.086 +0.016
BB1209EP63	12	14	20	1.0	9	0.8		
BB1212EP63	12	14	20	1.0	12	1.2		
BB1215EP63	12	14	20	1.0	15	1.3		
BB1217EP63	12	14	20	1.0	17	1.4		
BB1220EP63	12	14	20	1.0	20	1.5		
BB1412EP63	14	16	22	1.0	12	0.9		
BB1417EP63	14	16	22	1.0	17	1.5		
BB1509EP63	15	17	23	1.0	9	1.0		
BB1512EP63	15	17	23	1.0	12	1.2		
BB1517EP63	15	17	23	1.0	17	1.5		
BB1520EP63	15	17	23	1.0	20	1.8		
BB1617EP63	16	18	24	1.0	17	1.7		
BB2012EP63	20	23	30	1.5	11.5	2.4	+0.0210	+0.104 +0.020
BB2017EP63	20	23	30	1.5	16.5	3.2		
BB2022EP63	20	23	30	1.5	21.5	3.9		
BB2512EP63	25	28	35	1.5	11.5	2.9		
BB2517EP63	25	28	35	1.5	16.5	3.9		
BB2522EP63	25	28	35	1.5	21.5	4.9		

Other dimensions available on request.

KA Glacetal Thrust Washers

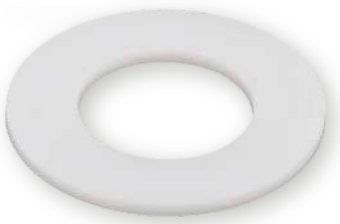

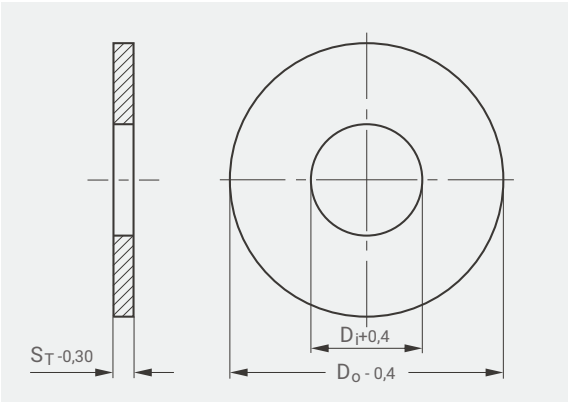

PART NO.	TECHNICAL DATA			
GGB	DIMENSIONS [mm]			
	Inside Ø D_i	Outside Ø D_o	Thickness S_T	Weight g
WC10KA	10.5	24.20	1.65	0.8
WC12KA	12.5	26.20	1.65	0.9
WC14KA	14.5	30.20	1.65	1.1
WC16KA	16.5	32.20	1.65	1.3
WC18KA	18.5	36.20	1.65	1.6
WC20KA	20.5	38.20	1.65	1.7
WC22KA	22.5	42.20	1.65	2.0
WC24KA	24.5	44.20	1.65	2.2
WC25KA	25.5	48.20	1.65	2.8
WC28KA	28.5	48.20	1.65	2.5
WC30KA	30.5	54.20	1.65	3.3
WC35KA	36.0	62.20	1.65	4.3
WC40KA	41.0	66.20	1.65	4.7
WC45KA	46.0	74.20	2.15	5.6
WC50KA	51.0	78.20	2.15	5.8

Other dimensions available on request.

Bearing Installation

HOUSING

GGB injection moulded bearings are manufactured for press fitting into housings machined to H7 tolerance. The press fit interference is 0.5 - 1.5% depending upon the diameter. For GGB injection moulded thermoplastic bearings, the interference is maintained at temperatures between -40 °C and the maximum temperature, although some reduction in the press-fit force will occur at temperatures above 100 °C. The bore of installed bushes will generally lie within the following tolerance range: EP® bushes D11 - D12.

JOURNALS

Journals finished to h7 tolerance are preferred. For EP® and KA bearings, optimum wear performance is obtained with a journal surface finish ground to Ra 0.4 - 0.8 µm. A minimum shaft hardness of HRC 50 is recommended.

BEARING CLEARANCE

The bearing clearance is designed for bush operating temperatures in the -10 °C to +80 °C range. Attention should be paid to the effect of thermal expansion. Where the normal operating temperature is above 80 °C, the clearance should be increased by about 0.15 o/oo per 10°C increment.

INSTALLATION

A GGB injection moulded bearing should be assembled into its housing with the aid of a stepped mandrel, preferably made from case-hardened mild steel. To assist assembly, a lead-in chamfer should be machined according to Fig. 1. The bush, mandrel, and housing must be correctly aligned during assembly. Recommended mandrel and chamfer dimensions are given in Fig. 1.

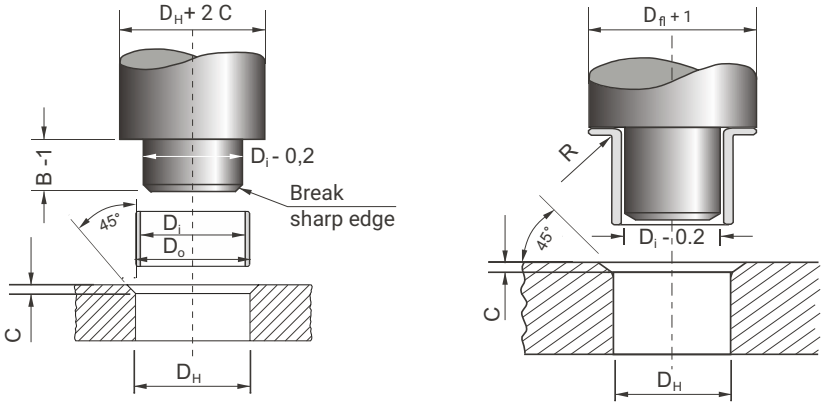

Figure 1: Fitting of cylindrical bushes

Chamfer C

D_H	C
≤ 12	0.8
>12 ≤ 65	1.2
> 65	2.3

Inner Diameter Measurement

The inner diameter of a cylindrical bearing can be measured using different types of equipment and procedures. See below for measurement methods, including advantages and disadvantages of each, and possible variation in the value of the inner diameter measurement obtained.

OF NOTE:

- The measurement of the internal diameter of a GGB split cylindrical bearing is to be carried out after mounting the bearing in the housing or in a ring gauge. The inner diameter of the bearing should not be measured in a free state.
- Except for the plug gauge measurement, it is recommended that measurements are made away from the split of the bearings.
- Only Plug Gauge and Air Gauge methods are employed by GGB for cylindrical bearings.

PLUG GAUGE

The inner diameter is checked with GO and NO GO plug gauges whose diameters correspond to the minimum and maximum diameter of the bearing. For standard-sized cylindrical bearings produced according to ISO 3547, this control corresponds to the Test C. The ends of the plug gauge are to be rounded to avoid possible removal and damage of the overlay during insertion of the plug gauge into the bearing.

A manual force is applied to the plug gauges during the control. It is also feasible to design a diameter of the plug gauge GO that drops freely through the bearing under its own mass, after concertation and agreement with GGB.

ADVANTAGES

- Low cost
- Easy and quick on-line measurement
- Functional measurement as the plug gauge replicates the shaft
- Suitable for small inner diameters

DISADVANTAGES

- No exact inner diameter value obtained
- Not suited to bearings with reduced inner diameter tolerances
- Can be operator-dependent

AIR GAUGE

The air gauge measurement is typically used to control bearings that are produced to tighter tolerances compared to the standard tolerance range which renders unfeasible control with GO and NO GO plug gauges. In some cases, a verification with a plug gauge GO under its own weight is also carried out for a functional control.

ADVANTAGES

- Easy and quick on-line measurement
- Exact values obtained
- High precision
- Appropriate for SPC
- Operator-independent (no contact between the air gauge and the bearing)

DISADVANTAGES

- Investment in the equipment
- Not suited to bearings with short width; diameter range for one air gauge limited

COORDINATE MEASURING MACHINE (CMM)

Many measurements made around the diameter and at different heights along the length of the bearing enable a visualization of the bearing shape and form.

ADVANTAGES

- Exact values with shape and form visualization
- High precision

DISADVANTAGES

- Not suitable for on-line measurement
- Expense equipment and time consuming

3-POINT INTERNAL MICROMETER

ADVANTAGES

- Exact values obtained
- Good precision
- Quick measurement lof arge surface area
- Wide diameter range of a micrometer

DISADVANTAGES

- Not a functional control

2-POINT GAUGE / CALIPER

The use of 2-point gauges is not recommended for the measurement of the inner dimension.
It is only suitable for the measurement of the bearing length.

VARIATION IN THE VALUE OF THE INNER DIAMETER

When different methods are used to measure the same inner diameter, the values of inner diameter obtained can vary. Typically, the plug gauge method will give the smallest inner diameter value as the plug gauge is in contact with the entire bearing surface (diameter and length) which englobes all shape and form defects (out of roundness and cylindricity).

The CCM value varies depending on the number of measurements made; few measurements will give a larger inner diameter than multiple measurements. If multiple measurements of the diameter are made at different heights, a value of inner diameter close to the GO plug gauge diameter can be obtained.

In general, the inner diameter measured with a 3-point internal micrometer or air gauge will be greater than the GO plug gauge diameter.

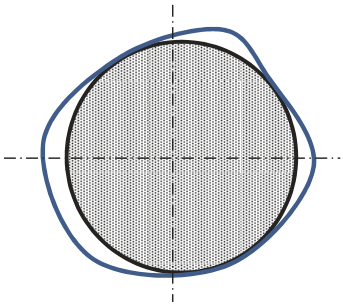

PLUG GAUGE

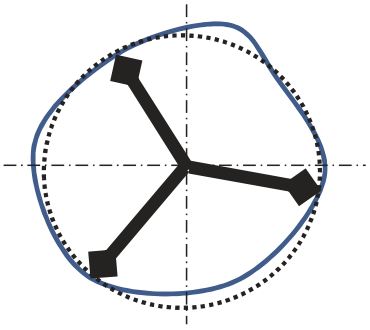

3 POINT INTERNAL MICROMETER AIR GUAGE

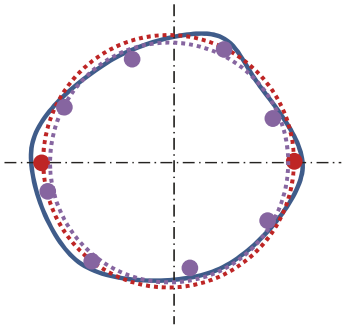

COORDINATE MEASURING MACHINE

- 2 Points Measurement
- 8 Points Measurement

Machining

GGB injection moulded bushes can be machined with conventional tools at normal speeds. For materials containing glass fibres, such as EP®, machining of the running surfaces is not recommended due to the increased exposure of glass fibre to the bearing surface which may result in excessive wear of the mating surface.

PROCESSING GUIDELINES FOR EP ROD STOCK

General Instructions:

- Only use pure water as the cooling fluid; otherwise machine dry or work with compressed air
- Use HSS-cutting tools or cutting tools with aluminium chip geometry for machining

TURNING	EP22	EP43	EP63
Cutting speed m/min	200 - 500	150 - 200	150 - 200
Feed rate mm/rev	0.05 - 0.5	0.05 - 0.03	0.05 - 0.03
Clearance angle α	5° - 15°	5° - 15°	5° - 15°
Cutting angle γ	0° - 10°	0° - 10°	0° - 10°
Setting angle χ	0° - 45°	0° - 45°	0° - 45°
Coolant	none	none	none

MILLING	EP22	EP43	EP63
Cutting tools	standard	standard	standard
Cutting speed m/min	200 - 500	50 - 150	50 - 150
Coolant	none	none	none

DRILLING	EP22	EP43	EP63
Cutting speed m/min	50 - 100	50 - 80	50 - 80
Feed rate mm/rev	0.1 - 0.3	0.1 - 0.3	0.1 - 0.3
Point angle φ	90° - 120°	90° - 120°	90° - 120°
Cutting angle γ	3° - 5°	3° - 5°	3° - 5°
Clearance angle α	10° - 15°	10° - 15°	10° - 15°
Coolant	none	none	none

Test Methods and Measuring Equipment

STANDARD AND SPECIAL TESTS

TEST B

DIN ISO 3547-2
Standard and special parts
Product type: bushing

ATTRIBUTES

- Outer diameter D_O - attributive = "Go-ring" or "No-go-ring" gauge
- "Go-ring" gauge - for improved distinction, the "Go-ring" gauge is always the bigger of the two
- "No-go-ring" gauge

DESCRIPTION OF TEST EQUIPMENT

Testing is done using two ring gauges - one "Go-ring" gauge and one "No-go" ring gauge. Their diameter is chosen and agreed on empirically from ISO 3547-2.

TESTING

Bushings are introduced and finally pushed through the "Go-ring" manually (maximum force 250N, but the "No-go" ring should not be fitted with the same force - see ISO 12307-1.)

COMMENTS

If they are not easily introduced by hand into the "Go-ring", the D_O is too big.

If they are easily introduced by hand into the "No-go-ring", the D_O is too small.

RECORDING OF RESULTS

The results obtained can be recorded in an error collection card or inspection sheet.

TEST C

DIN ISO 3547-2
PLEASE NOTE: destructive testing!
Attributive test: ring gauge
Product type: busing

ATTRIBUTES

- Inner diameter D_i - attributive = "Go-ring" or "No-go-ring" gauge
- Plug gauge
- "No-go-ring" gauge
- Ring gauge
- "Go" pluge gauge

TESTING

For testing the inner diameter, the bushing is pressed into a ring gauge whose diameter corresponds with the measurements set by ISO 3547-1. Other parameters of the ring gauge are in accordance with ISO 3547-6.

The inner diameter is checked using a "Go" plug gauge and a "No-go" plug gauge. The diameters of the two gauges equal the maximum and minimum tolerances for the D_i according to ISO 3547-1. The "Go" plug gauge must be easily insertable (under its own weight). The "No-go" plug gauge may not be introduced manually (maximum force 250N).

Force-fitting the bush into the ring gauge may cause a lasting reduction of its outer diameter (destructive testing).

RECORDING OF RESULTS

The results obtained can be recorded in an error collection card or inspection sheet.

THREE-POINT MEASURING TEST

Product type: bushing

SET-UP OF TEST PARAMETERS

The test equipment is set to zero - the exact D_i required using a setting ring gauge.

ATTRIBUTES

- Inner diameter - variable = measured values
- Digital dial gauge
- Setting ring gauge
- Probe
- Worktop

TESTING

For checking the D_i, the bushing is force-fitted into a ring gauge whose diameter equals the measurements set forth in ISO 3547-1. Other parameters of the ring gauge are in accordance with ISO 3547-6.

When measuring, the force-fitted bushing in the ring gauge is placed on the worktop and the D_i is measured by the probe of the 3-point-measuring test in accordance with ISO 3547.

Force-fitting the bush into the ring gauge may cause a lasting reduction of its outer diameter (destructive testing).

RECORDING OF RESULTS

The results obtained can be recorded in a control card or inspection sheet using software.

SPECIAL TESTS

TESTING WALL THICKNESS DIN ISO 3547

Product type: bushing

ATTRIBUTES

- Wall thickness - variable = measured values
- Measuring device: digital dial gauge for wall thickness
- Receiver
- Probe

TESTING

Testing is regulated in Norm 3547.
Measurements are done along the lines on the bushing's width at several reading points arranged on the circuit.

Based on the bushing's geometry (diameter and width), the number of lines and reading points is modified according to DIN ISO 3547.

MICROSCOPE FOR MEASURING CHAMFER GEOMETRY

Product type: bushing

ATTRIBUTES

- Chamfer angle and length - measuring = measured values
- Measuring tape
- Angle measure
- Digital display
- X-coordinate
- Y-coordinate

TESTING

Use a microscope to measure the chamfer geometry (chamfer angle and length) of bushings and special parts. See corresponding product description - for example, GSP / delivery program, technical manual, or customer specifications.

Chamfer tolerances are specified in DIN ISO 3547; they vary according to the bushing's dimensions.

Using x-coordinates, y-coordinates, and angle measure, the microscope determines chamfer width and angles.

RECORDING OF RESULTS

The are obtained can be recorded in a dimension sheet or inspection sheet.

LOAD CELL MEASURING ASSEMBLY FORCE

Product type: bushing

ATTRIBUTES

- Assembly force - variable = measured values
- Digital dial gauge
- Force
- Table

TESTING

The bushing is force-fitted into the ring gauge (in the middle of tolerance range, test method C). The load cell assesses the force required. The digital display gives the value.

RECORDING OF RESULTS

The results obtained can be recorded in a control card or inspection sheet using a software program.

3D-COORDINATE MACHINE

Product type: all product types

ATTRIBUTES

- All geometric shapes - variable = measured values
- Probe holder: contains several probes
- Bridge
- Probe
- Worktop

TESTING

With the 3D-coordinate machine, the dimensions of products can be digitized. Any geometrical shape may be measured (e.g., straightness, cylinder, and surfaces).

A fully automated measuring process, it can either be integrated into production or used for special, precise one-time measurements.

RECORDING OF RESULTS

The results obtained can be recorded in software then analyzed and displayed in numerous ways.

Bearing Application Data Sheet

Please complete the form below and share it with your GGB sales engineer or send it to: **usa@ggbearings.com**

DATA FOR BEARING DESIGN CALCULATION

Application: _____

_____

Project/No.: _____ Quantity: _____ ☐ New Design ☐ Existing Design

☐ Steady load ☐ Rotating load ☐ Rotational movement ☐ Oscillating movement ☐ Linear movement

DIMENSIONS [MM]

Inside diameter	D_i	
Outside diameter	D_o	
Length	B	
Flange Diameter	D_{fl}	
Flange thickness	B_{fl}	
Wall thickness	S_T	
Length of slideplate	L	
Width of slideplate	W	
Thickness of slideplate	S_S	

LOAD

☐ Static load
☐ Dynamic load

Axial load F	[N]	
Radial load F	[N]	

MOVEMENT

Rotational speed	N [1/min]	
Speed	U [m/s]	
Length of stroke	L_S [mm]	
Frequency of stroke	[1/min]	
Oscillating cycle 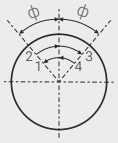	ϕ [°]	
Osc. frequence	N_{osz} [1/min]	

MATING SURFACE

Material		
Hardness	HB/HRC	
Surface finish	Ra [µm]	

FITS & TOLERANCES

Shaft	D_J	
Bearing housing	D_H	

OPERATING ENVIRONMENT

Ambient temperature	T_{amb}[°]	
Bearing housing material		

☐ Housing with good heating transfer properties
☐ Light pressing or insulated housing with poor heat transfer properties
☐ Non metal housing with poor heat transfer properties
☐ Alternate operation in water and dry

LUBRICATION

☐ Dry
☐ Continuous lubrication
☐ Process fluid lubrication
☐ Initial lubrication only
☐ Hydrodynamic conditions

Process fluid		
Lubricant		
Dynamic viscosity	η[mPas]	

SERVICE HOURS PER DAY

Continuous operation	
Intermittent operation	
Operating time	
Days per year	

SERVICE LIFE

Required service life	L_H [h]	

BEARING TYPE

☐ Cylindrical bush

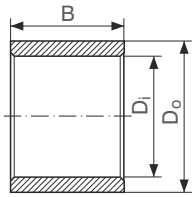

☐ Flanged bush

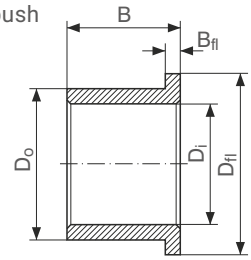

☐ Thrust washer

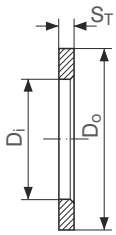

☐ Slideplate

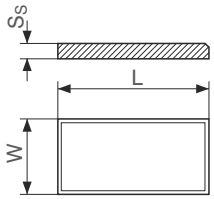

☐ Special parts (sketch)

CUSTOMER INFORMATION

Company _____

Street _____

City / State / Province / Post Code _____

Telephone _____ Fax _____

Name _____

Email Address _____ Date _____

Product Information

GGB assures the products described in this document have no manufacturing errors or material deficiencies.

The details set out in this document are registered to assist in assessing material suitability for intended use. They have been developed from our own investigations as well as generally accessible publications. They do not represent any assurance for the properties themselves.

Unless expressly declared in writing, GGB gives no warranty that the products described are suited for any particular purpose or specific operating circumstances. GGB accepts no liability for any losses, damages, or costs however they may arise through direct or indirect use of these products.

GGB's sales and delivery terms and conditions, included as an integral part of quotations, stock and price lists, apply absolutely to all business conducted by GGB. Copies can be made available on request.

Products are subject to continual development. GGB retains the right to make specification amendments or improvements to technical data without prior announcement. Edition 2020 (this edition replaces earlier editions which hereby lose their validity).

STATEMENT REGARDING LEAD CONTENT IN GGB PRODUCTS & EU DIRECTIVE COMPLIANCE

GGB is committed to adhering to all U.S., European, and international standards and regulations with regard to lead content. We have established internal processes that monitor any changes to existing standards and regulations, and we work collaboratively with customers and distributors to ensure all requirements are strictly followed. This includes RoHS and REACH guidelines.

GGB makes it a top priority to operate in an environmentally conscious and safe manner. We follow numerous industry best practices and are committed to meeting or exceeding a variety of internationally recognized standards for emissions control and workplace safety.

Each of our global locations has management systems in place that adhere to IATF 16949, ISO 9001, ISO 14001, OHSAS 18001, and AS9100D/EN9100 quality regulations.

All of our certificates can be found here: **www.ggbearings.com/en/company/certificates**. A detailed explanation of our commitment to REACH and RoHS directives can be found at **www.ggbearings.com/en/company/quality-and-environment**.

THE TRIBOLOGICAL SOLUTION PROVIDER FOR INDUSTRIAL PROGRESS, REGARDLESS OF SHAPE OR MATERIAL

GGB NORTH AMERICA

700 Mid Atlantic Parkway | Thorofare, New Jersey, 08086 USA

Tel: +1-856-848-3200 | Fax: + 1-856-848-5115

usa@ggbearings.com | https://www.ggbearings.com

HB400ENG07-20USA