EDMS Nb. 2040865
Created: 1 November 2018
Modified: 2 November 2018

Piping welding quality and applied standards for ATLAS & CMS Phase II CO_2

Prepared by:	To be checked by:	To be approved by:
C. Bortolin [EP/ADO]	D. Giakoumi [EP/DT] J. Daguin [EP/DT] P. Lopez Macia [EP/DT] T. Pakulski [EP/DT] P. Petagna [EP/DT] R. Puente Rico [EP/DT] P. Tropea [EP/DT] B.Verlaat [EP/DT] L. Zwalinski [EP/DT]	

Distribution List:

xxxxx

History of Changes

Rev.	Date	Nb of Pages	Description of Changes
0	1/11/18	12	First version

Outline

1. Scope of this document

In the framework of the Upgrade Phase II of the ATLAS and CMS Pixel detectors, the CO2 cooling systems piping must be designed and built according to the European standards for pressure equipment. This document deals with the requirements for welders, welding procedures and describes the quality and acceptance criteria for piping welding.

2. Welding: personnel and procedures rules

Welding personnel qualification (welders and procedures rules are described in the standards EN 13480 (2017), part 4 (Metallic industrial piping: fabrication and installation) chapter 9[1].
A recognized Examining Body should be identified to qualify welders and procedures before starting the production of the final joints.

2.1 Welding personnel

Welding operators must qualified with ISO 14732 (2013)[2]

2.2 Welding procedures

The quality level C is the one to be considered according to EN ISO 5817, this is a middle level as you can see in the tables listed in the file of the standard attached.
For category I as stated in the table 9.3.1.1 of EN 13480 the welding procedures to be qualified must follow the rules listed in EN 15614 part 1 (Arc and gas welding of steels and arc welding of nickel and nickel alloys) (2017)[3].
The rules explain how to prepare test pieces for butt joints, filled and branch connections.
In the introduction of the document the levels of welding procedures are mentioned and we consider level 2 as the accepted one.
The welded samples must be checked by a laboratory certified by PED, the foreseen list of tests for level 2 are shown in Table 2 (see Annexes below), the Examining Body will check the results:

- Visual testing
- Radiographic and ultrasonic testing
- Surface crack detection
- Transverse tensile test
- Transverse bend test
- Impact test
- Hardness test
- Macroscopic examination

[1] https://cds.cern.ch/record/2300726/files/NF-EN-13480-4-V1-en.pdf

[2] https://cds.cern.ch/record/1644951?ln=en

[3] https://cds.cern.ch/record/2298925/files/NF-EN-ISO-15614-1-en.pdf

Please check the footnotes in the table because for instance for thickness t of material below 8mm the ultrasonic testing is not foreseen and impact testing is applied only for t >12mm. The extent of testing for piping is showed in figure 6.

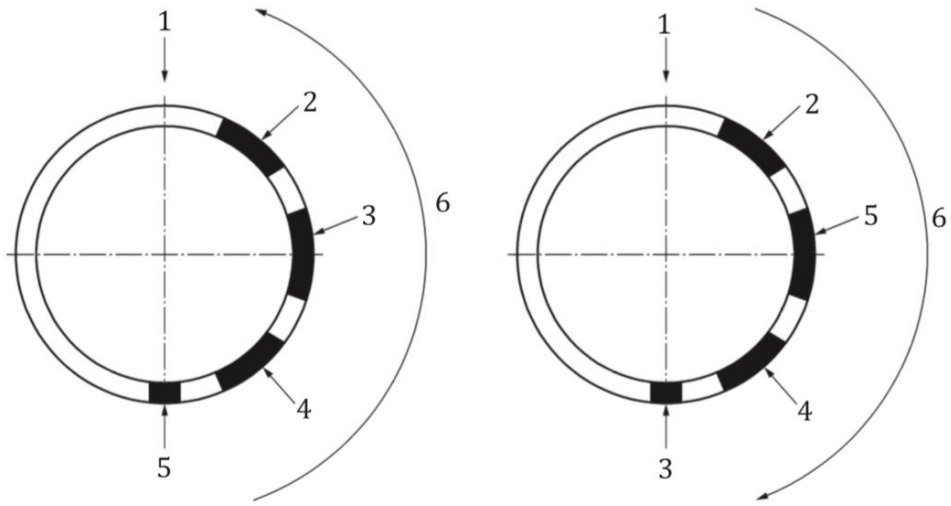

Key

1 end of weld
2 area for:
— 1 tensile test specimen
— bend test specimens
3 area for:
— impact and additional test specimens if required
4 area for:
— 1 tensile test specimen
— bend test specimens
5 start of weld; area for:
— 1 macro test specimen
— 1 hardness test specimen (taken from the start of weld)
6 weld direction
NOTE Not to scale.

Figure 6 — Location of test specimens for a butt joint in pipe

3. Range of qualification

In table 5[3] the range of qualifications are shown, the materials used for CO_2 piping will be always SS 316L or 304L, these materials are both in group 8.1
Table 7 is important because it shows how more thicknesses can be qualified in one test. For instance a t=3mm for level 2 means you qualify the procedure for thicknesses between 1.5mm to 6mm.
The same is valid for fillet and branch welding as showed in Table 8 and 9. Tables7, 8 and 9 are shown in the annexes of this document.

3.1 Common to all welding procedures

Orbital welding doesn't include a manual welding qualification, the position of the welding implies also some rules, in particular check the ones listed for level 2 on chapter 8.4.3. [3]

3.2 Post welding treatments

In chapter 9.6 of EN 13480[1] some information about cleaning procedures before and after welding process are described. In annex A of the mentioned document are listed some recommendations that are not compulsory but based on the best practice.
In section A.4.2 the decontamination and passivation methods are briefly described.

4. Summary of documentation for welding operation qualification

4.1 WPQR (welding procedure Qualification record)

The procedure must comply with the EN-15614-1 and approved by external and recognized examining body.
Specification and qualification of welding procedures for metallic materials - Welding procedure test - Part 1: arc and gas welding of steels and arc welding of nickel and nickel alloys [3].

4.2 WPS (Welding Procedures Specification)

The procedure must comply EN-15609-1[4] and approved only by the manufacturer.

4.3 WOPQ (Welding Operator Performance Qualification)

The operators must be qualified according to ISO 14372 and approved by external and recognized examining body.

5. Inspection and testing of manufactured parts

During production, in order to accept the welded components, the criteria established by EN 13480-5 §8 are to be followed. In particular, they describe the minimum extent of non-destructive inspection of welded joints in metallic piping.[5]
The piping category shall be determined in accordance with EN 13480-1[6], see Table 5.1-1 in the annexes of this document.

---

[4] https://cds.cern.ch/record/1271424/files/ISO_15609-1.pdf

[5] https://cds.cern.ch/record/2300733?ln=en

5.1 Extent of testing for circumferential butt, branch, fillet and seal welds

The type of NDT required and its minimum extent are determined in accordance with Table 8.2-1 of EN 13480-5[5], taking into account the category of the piping, and also the wall thickness and material grouping.
Due to the severity of the applications for which this specification is written (low temperature CO_2 in underground premises, long term operation with limited accessibility), the inspections of butt-welded joints for material group 8.1 (SS 316L and 304L) is requested to be 100% visual inspection and 10% of RT/UT for all categories I, II and III. Please see the table in the annexes.

5.2 Longitudinal welds

Longitudinal welds shall be subjected to a 10% of volumetric inspection (RT or UT).

5.3 Selection of welded samples when the extent of testing is < 100%

In accordance with EN 13480-5[5], when the required extent of testing is less than 100%, the sample welds to be examined are to be randomly selected and representative of a batch of welds.
A batch of welds is a quantity of welds, welded by an individual welder or welding operator, in accordance with a specific welding procedure specification.
All welders and welding operators shall be covered.
At least one complete sample weld is to be examined over its whole length.

5.4 NDT procedure and verification of the inspection results and acceptance level

The appropriate non-destructive testing techniques are to be selected taking into account the materials, the joint type, the required quality level and defect detectability, and in accordance with EN ISO 17635[7]. The techniques used are to be compliant with their respective standards:

- Visual testing (VT): EN ISO 17637;
- Radiographic testing (RT): EN ISO 17636-1 or -2 ;
- Ultrasonic testing (UT) : EN ISO 17640 ;
- Penetrant testing (PT) : EN ISO 3452-1, -2, -3, -5, -6 ;
- Magnetic particle testing (MT) : EN ISO 17638 ;
- Eddy current testing (ET): EN ISO 17643.

Level 1 is the acceptance level required for butt welds. The levels description and defects classifications are available on EN ISO 5817-2014[8], and EN ISO 10675[9].

---

[6] https://cds.cern.ch/record/2300709?ln=en
[7] https://cds.cern.ch/record/2263775/files/ISO_17635_2016.PDF
[8] https://cds.cern.ch/record/1970500/files/ISO_5817_2014_fr.PDF
[9] https://cds.cern.ch/record/1214193/files/ISO_10675-1-2008-f.pdf

5.5 Qualification of personnel for NDT

The Non-destructive testing personnel are to be qualified and certified in accordance with EN ISO 9712. Non-destructive testing personnel are to hold an appropriate certificate of competence (testing can be carried out by level 1 personnel, but always under the supervision of personnel certified to level 2 or level 3 who is also be responsible for the evaluation of the results. Ultrasonic testing is to be performed and evaluated by an individual certified to at least a level 2).
According to standards EN 13480 (for metallic piping) and EN 13445 (for pressure vessels), it is not required for personnel conducting visual testing (VT) to be certified in accordance with EN ISO 9712. Nevertheless, it is recommended that the results of a visual inspection are at least evaluated by a certified individual, or that the personnel carrying out the visual inspection are themselves certified.

6. Conclusions

The rules listed above must be followed in order to comply with the safety and match the quality criteria defined by CERN.

Annexes

Table 2 — For level 2: Examination and testing of the test pieces

Test piece	Type of test	Extent of testing	Footnote
Butt joint with full penetration — Figure 1 and Figure 2	Visual testing	100 %	—
	Radiographic or ultrasonic testing	100 %	a
	Surface crack detection	100 %	b
	Transverse tensile test	2 specimens	—
	Transverse bend test	4 specimens	c
	Impact test	2 sets	d
	Hardness test	required	e
	Macroscopic examination	1 specimen	—
T- joint with full penetration — Figure 3	Visual testing	100 %	
	Surface crack detection	100 %	b
Branch connection with full penetration — Figure 4 f	Ultrasonic or radiographic testing	100 %	a, g
	Hardness test	required	e
	Macroscopic examination	2 specimens	
Fillet weld — Figure 3 and Figure 4 f	Visual testing	100 %	
	Surface crack detection	100 %	b
	Hardness test	required	e
	Macroscopic examination	2 specimens	

a Ultrasonic testing shall not be used for $t < 8$ mm and not for material groups 8, 10, 41 to 48.

b Accessible weld surfaces: penetrant testing or magnetic particle testing. For non-magnetic materials, penetrant testing.

c For bend tests, see 7.4.2.

d One set in the weld metal and one set in the HAZ for materials ≥12 mm thick and having specified impact properties required by technical delivery conditions and/or if appropriate according to the service conditions. Application standards may require impact testing below 12 mm thick. The testing temperature shall be chosen by the manufacturer with regard to the application or application standards. For additional tests, see 7.4.4.

e Not required for parent metals: sub-group 1.1, groups 8 and 41 to 48 and dissimilar joints between these groups, except for dissimilar joints between sub-group 1.1 and group 8.

f Where mechanical properties are required by an application standard, it shall be tested accordingly. If an additional test piece is needed, the dimensions should be sufficient enough to allow testing of the mechanical properties. For this additional test piece, the welding parameter range, parent material group, filler metal and heat treatment are required to be the same.

g For outside diameter ≤50 mm, no ultrasonic testing is required, but radiographic testing is required provided that the joint configuration will provide valid results. For outside diameter >50 mm and where it is not technically possible to carry out ultrasonic testing, a radiographic testing shall be carried out provided that the joint configuration will provide valid results.

Table 7 — Range of qualification for butt welds material thickness and deposited metal thickness

Dimensions in millimetres

Thickness of test piece t	Range of qualification			
	Parent material thickness			Deposited weld metal thickness for each process s
	Level 1	Level 2		
		Single run	Multi-run	
$t \leq 3$	0,5 t to 2 t			max. 2 s
$3 < t \leq 12$	1,5 to 2 t	0,5 t (3 min) to 1,3 t	3 to 2 t[a]	max. 2 s[a]
$12 < t \leq 20$	5 to 2 t	0,5 t to 1,1 t	0,5 t to 2 t	max. 2 s
$20 < t \leq 40$	5 to 2 t	0,5 t to 1,1 t	0,5 t to 2 t	max. 2 s when $s < 20$ max. 2 t when $s \geq 20$
$40 < t \leq 100$	5 to 200	—	0,5 t to 2 t	max. 2 s when $s < 20$ max. 200 when $s \geq 20$
$100 < t \leq 150$	5 to 200	—	50 to 2 t	max. 2 s when $s < 20$ max. 300 when $s \geq 20$
$t > 150$	5 to 1,33 t	—	50 to 2 t	max. 2 s when $s < 20$ max. 1,33 t when $s \geq 20$

[a] For level 2: when impact requirements are specified but impact tests have not been performed, the maximum thickness of qualification is limited to 12 mm.

Table 8 — For level 2: Range of qualification for material thickness and throat thickness of fillet welds

Dimensions in millimetres

Thickness of test piece t	Range of qualification		
	Material thickness[a]	Throat thickness	
		Single run	Multi-run
$t \leq 3$	0,7 t to 2 t	0,75 a to 1,5 a	No restriction
$3 < t < 30$	3 to 2 t		
$t \geq 30$	≥5		

Where a fillet weld is qualified by means of a butt weld test, the throat thickness range shall be based on the thickness of the deposited weld metal.

NOTE a is the nominal throat thickness as specified in pWPS for the test piece.

[a] In case of different material thicknesses, the range of qualification of both thicknesses of the test pieces shall be calculated separately.

Table 9 — For level 2: Range of qualification for pipe and branch connection diameters

Dimensions in millimetres

Diameter of the test piece	Range of qualification
D	≥0,5 D

NOTE 1 For hollow section other than circular (for example, elliptic), D is the dimension of the smaller side.

NOTE 2 D is the outside diameter for the pipe of a butt weld or the outside diameter of the branch pipe for a branch connection (see Figure 4, outside diameter D_2).

Table 5.1-1 — Classification of piping systems by piping categories

Fluid	Fluid group (see CEN/TR 13480-7:2002, 4.2)	Criteria	Category	Reference to CEN/TR 13480-7
Gases [a]	1	*PS* >0,5 bar and DN>350 or *PS*>0,5 bar and DN>100 and *PS* · DN>3 500	III	See Figure A.1
		PS>0,5 bar and 100<DN≤350 and *PS* · DN≤3 500 or 25<DN≤100 and *PS* · DN>1 000 or 25<DN≤350 and 1 000<*PS* · DN <3500	II [b]	
		PS>0,5 bar and 25<DN≤100 and *PS* · DN≤1 000	I [b]	
		PS>0,5 bar and DN≤25	0 (see 5.2)	
	2	*PS*>0,5 bar and DN>250 and *PS* · DN>5 000	III	See Figure A.2
		PS>0,5 bar and DN>250 and 3 500<*PS* · DN≤5 000 or 100<DN≤250 and *PS* · DN>3 500	II [c]	
		PS>0,5 bar and DN>32 and 1 000<*PS* · DN≤3 500 or 32<DN≤100 and *PS* · DN>1 000	I	
		PS>0,5 bar and DN≤32 or *PS*>0,5 bar and *PS* · DN≤1000	0 (see 5.2)	
	All	*PS*≤0,5 bar	(see 5.3)	–
Liquids [d]	1	*PS*>500 bar and DN>25	III	see Figure A.3
		10 bar<*PS*≤500 bar and DN>25 and *PS* · DN>2 000	II	
		0,5 bar<*PS*≤10 bar and *PS* · DN>2 000	I	
		PS>0,5 bar and DN≤25 or *PS*>0,5 bar and *PS* · DN≤2 000	0 (see 5.2)	
	2	*PS*>500 bar and DN>200	II	See Figure A.4
		10<*PS*≤500 bar and DN>200 and *PS* · DN>5 000	I	
		0,5 bar<*PS*≤10 bar or *PS*>0,5 bar and DN≤200 or *PS*>0,5 bar and *PS* · DN≤5 000	0 (see 5.2)	
	All	*PS*≤0,5 bar	(see 5.3)	–

[a] Gases: gases, liquefied gases, gases dissolved under pressure, vapours and those liquids whose vapour pressure at the maximum allowable temperature is greater than 0,5 bar above normal atmospheric pressure of 1,013 bar (1 013 mbar).

[b] Piping for unstable gases which fall within category I or II on the basis of the above table, shall be classified in category III. (An unstable gas is a gas or a vapour liable to be transformed spontaneously and suddenly, which produces a variation in pressure when this transformation takes place in a closed volume under the sole effect of a small variation in one of the operation parameters.)

[c] All piping containing gases at a temperature greater than 350 °C which fall within category II on the basis of the above table shall be classified in category III.

[d] Liquids: liquids having a vapour pressure at the maximum allowable temperature of not more than 0,5 bar above normal atmospheric pressure of 1,013 bar (1 013 mbar).

Table 8.2-1 — Extent of testing for circumferential, branch, fillet and seal welds

Material group [a]	Category	All welds	Circumferential welds			Branch welds						Socket/fillet welds		Seal welds	
			Surface testing		Volumetric testing [b]	Surface testing			Volumetric testing [b,k]			Surface testing		Surface testing	
		VT %	e_n mm	MT/PT [c] %	RT/UT %	Branch diameter	e_n [h] mm	MT/PT [c] %	Branch diameter [i]	e_n [h] mm	RT/UT %	e_n mm	MT/PT %	e_n mm	MT/PT %
1.1, 1.2, 8.1	I	100	0 (5) [f,g]		5 (10) [g]	All		0 (5) [f,g]	All		0	All	0	All	0
	II														
	III				10			10	> DN 100	> 15	10		10		10
1.3, 1.4, 1.5, 2.1, 2.2, 4.1, 4.2, 5.1, 5.2, 8.2, 8.3, 9.1, 9.2, 9.3, 10.1, 10.2	I	100	≤ 30	5	10	All [e]		10 (25) [g]	All		0	All [e]	10	All [e]	5
			> 30	10	10										
	II		≤ 30	5	10										
			> 30	10	10										
	III		≤ 30	5	10 (25 [d]) [f,g]	All			> DN 100	> 15	10	All	25	All	25
			> 30	10	10 (25 [d]) [f,g]										
3.1, 3.2, 3.3, 5.3, 5.4, 6.1, 6.2, 6.3, 6.4, 7.1, 7.2	I	100	≤ 30	10	25	All		25	> DN 100	> 15	25	All	25	All	10
			> 30	25	25										
	II		≤ 30	25	25										
			> 30	25	25 (25 [d]) [f,g]										
	III		≤ 30	100	25 (100) [f,g]			100			100		100		100
			> 30	100	25 (100 [d]) [f,g]										

[a] Material group, see CEN ISO/TR 15608.
[b] For the selection of the appropriate NDT-method for volumetric testing, see 8.4.4.3.
[c] See 8.4.4.2.
[d] Additional testing for transverse defects from weld surface (see EN ISO 17640:2010, testing level C).
[e] Only if PWHT has been carried out.
[f] Value in brackets applies to piping where creep or fatigue is the controlling factor in design.
[g] Value in brackets applies to piping with pneumatic pressure test with 1,1 times the maximum allowable pressure.
[h] e_n is the nominal thickness of the branch pipe at the weld (see W3, W3.1 and W6 in EN 13480-4:2017, Figure 9.14.4-1 and Figure 9.14.4-2).
[i] For parts without DN designation d_i > 120 mm may be used instead of DN > 100.
[k] Volumetric testing is required if both criteria (branch diameter and nominal thickness) are satisfied.