TECHNICAL MANUAL

OPERATOR'S, ORGANIZATIONAL, DIRECT SUPPORT
AND GENERAL SUPPORT MAINTENANCE MANUAL
(INCLUDING REPAIR PARTS AND SPECIAL TOOLS LISTS)

POWER METER TS-3793/U
(HEWLETT-PACKARD MODEL 436A)
(NSN 6625-01-033-5050)

HEADQUARTERS, DEPARTMENT OF THE ARMY

9 MAY 80

SAFETY STEPS TO FOLLOW IF SOMEONE IS THE VICTIM OF ELECTRICAL SHOCK

1. **DO NOT TRY TO PULL OR GRAB THE INDIVIDUAL**

2. **IF POSSIBLE, TURN OFF THE ELECTRICAL POWER**

3. **IF YOU CANNOT TURN OFF THE ELECTRICAL POWER, PULL, PUSH, OR LIFT THE PERSON TO SAFETY USING A WOODEN POLE OR A ROPE OR SOME OTHER INSULATING MATERIAL**

4. **SEND FOR HELP AS SOON AS POSSIBLE**

5. **AFTER THE INJURED PERSON IS FREE OF CONTACT WITH THE SOURCE OF ELECTRICAL SHOCK, MOVE THE PERSON A SHORT DISTANCE AWAY AND IMMEDIATELY START ARTIFICIAL RESUSCITATION**

This manual includes copyright material reproduced by permission of the HEWLETT-PACKARD Company.

TECHNICAL MANUAL
No. 1l-6625-2969-14&P)

HEADQUARTERS
DEPARTMENT OF THE ARMY
WASHINGTON, DC, *9 May 1980*

OPERATOR'S, ORGANIZATIONAL, DIRECT SUPPORT AND GENERAL SUPPORT MAINTENANCE MANUAL (INCLUDING REPAIR PARTS AND SPECIAL TOOLS LISTS) POWER METER TS-3793/U (HEWLETT-PACKARD MODEL 436A) (NSN 6625-01-033-5050)

REPORTING OF ERRORS

You can improve this manual by recommending improvements using DA Form 2028-2 located in the back of the manual. Simply tear out the self-addressed form, fill it out as shown on the sample, fold it where shown, and drop it in the mail.

If there are no blank DA Forms 2028-2 in the back of your manual, use the standard DA Form 2028 (Recommended Changes to Publications and Blank Forms) and forward to the Commander, US Army Communications and Electronics Materiel Readiness Command, ATTN: DRSEL-ME-MQ, Fort Monmouth, NJ 0 7 7 0 3 .

In either case a reply will be furnished direct to you.

SERIAL NUMBER

This manual applies directly to instruments with serial numbers prefixed 1606A, 1611A and 1629A.

With changes described in section VII, this manual also applies to instruments with serial numbers prefixed 1447A, 1448A, 1451A, 1501A, 1503A, 1504A, 1505A, 1538, and 1550A.

For additional important information about serial numbers, see INSTRUMENTS COVERED BY MANUAL in section I.

This manual is an authentication of the manufacturer's commercial literature which, through usage, has been found to cover the data required to operate and maintain this equipment. Since the manual was not prepared in accordance with military specifications, the format has not been structured to consider levels of maintenance.

CONTENTS

Section		Page
0	INSTRUCTIONS	0-1
0-1	Scope	0-1
0-2	Indexes of Publications	0-1
0-3	Forms and Records	0-1
0-4	Reporting of Equipment Improvement Recommendations (EIR)	0-1
0-5	Administrative Storage	0-1
0-6	Destruction of Army Electronics Materiel	0-1
I	GENERAL INFORMATION	1-1
1-1.	Introduction	1-1
1-6.	Specifications	1-1
1-8.	Instruments Covered by Manual	1-1
1-14.	Description	1-1
1-18.	Options	1-3
1-19.	Input-Output Options	1-3
1-22.	Cable Options.	1-3
1-24.	Remote Control Options	1-4
1-27.	Accessories Supplied	1-4
1-29.	Equipment Required but not Supplied.	1-4
1-31.	Equipment Available	1-4
1-34.	Recommended Test Equipment	1-4
1-36.	Safety Considerations	1-4
II	INSTALLATION	2-1
2-1.	Introduction	2-1
2-3.	Initial Inspection	2-1
2-5.	Preparation for Use	2-1
2-6.	Power Requirements	2-1
2-8.	Line Voltage Selection	2-1
2-10.	Power Cable	2-1
2-12.	Circuit Options	2-2
2-14.	Interconnections	2-2
2-18.	Mating Connectors	2-2
2-21.	Operating Environment.	2-2
2-23.	Bench Operation	2-2
2-25.	Rack Mounting	2-2
2-28.	Storage and Shipment	2-3
2-29.	Environment	2-3
2-31.	Packaging.	2-3
III	OPERATION	3-1
3-1.	Introduction	3-1
3-4.	Panel Features.	3-1
3-6.	Operator's Maintenance	3-1
3-8.	Operator's Checks	3-1
3-10.	Local Operating Instructions	3-1
3-12.	Hewlett-Packard Interface Bus Remote Operation	3-20
3-14.	Compatibility	3-20
3-18.	DataMessages.	3-20
3-21.	Receiving Data Messages	3-20
3-32.	Sending Data Messages from the Power Meter	3-24
3-40.	Receiving the Trigger Message	3-29
3-42.	Receiving the Clear Message	3-29
3-44.	Receiving the Remote Message	3-29
3-46.	Receiving the Local Message	3-29
3-48.	Receiving the Local Lockout and Clear Lockout Set Local Messages	3-29
3-50.	Receiving the Pass Control Message	3-29
3-52.	Sending the Required Service Message	3-29
3-54.	Sending the Status Byte Message	3-29
3-56.	Sending the Status Bit Message	3-29
3-58.	Receiving the Abort Message	3-29
3-60.	Test of HP-IB Operation	3-29
3-62.	Remote BCD Interface Operation	3-29
3-65.	Output Data Format	3-36
3-67.	BCD Remote Programming	3-36
3-73.	Power Measurement Accuracy	3-37
3-75.	Sources of Error and Measurement Uncertainty	3-37
3-81.	Corrections for Error	3-38
3-86.	Calculating Total Uncertainty	3-38
IV	PERFORMANCE TESTS	4-1
4-1.	Introduction	4-1
4-3.	Equipment Required	4-1
4-5.	Test Record	4-1
4-7.	Performance Tests	4-1
4-10.	Zero Carryover Test	4-2
4-11.	Instrument Accuracy Test	4-3
4-12.	Calibration Factor Test	4-6
4-13.	Power Reference Level Test	4-7
V	ADJUSTMENTS	5-1
5-1.	Introduction	5-1
5-4.	Safety Considerations	5-1
5-10.	Equipment Required	5-1
5-12.	Factory Selected Components	5-1
5-14.	Adjustment Locations	5-1
5-16.	DC Offset Adjustment	5-2
5-17.	Auto Zero Offset Adjustment	5-3
5-18.	Spike Balance Adjustment	5-4
5-19.	Multivibrator Adjustment	5-5
5-20.	A-D Converter and Linear Meter Adjustment.	5-6
5-21.	Power Reference Oscillator Frequency Adjustment	5-8
5-22.	Power Reference Oscillator Level Adjustment	5-9
VI	REPLACEABLE PARTS	6-1
6-1.	Introduction	6-1
6-3.	Abbreviations	6-1
6-5.	Replaceable Parts List	6-1
6-7.	Ordering Information	6-1

CONTENTS (Cont'd)

Section		Page
6-10.	Parts Provisioning	6-1
6-12.	Direct Mail Order System	6-1
6-13	Cross Reference Index	6-21
VII	MANUAL CHANGES	7-1
7-1.	Introduction	7-1
7-3.	Manual Changes	7-1
7-6.	Manual Change Instructions	7-1
VIII	SERVICE	8-1
8-1.	Introduction	8-1
8-3.	Safety Considerations	8-1
8-9.	Recommended Test Equipment	8-5
8-11.	Service Adds	8-5
8-16.	Repair	8-5
8-17.	Factory Selected Components	8-5
8-19.	Disassembly and Reassembly Procedures	8-5
8-24.	Basic Circuit Descriptions	8-7
8-25.	Linear Integrated Circuits	8-7
8-30.	Digital Integrated Circuits and Symbols	8-7
8-55.	Troubleshooting	8-16
8-59.	Standard Instrument Checkout	8-16
8-64.	HP-IB Instrument Checkout	8-69
8-68.	BCD Instrument Checkout	8-117
8-70.	Block Diagram Circuit Descriptions	8-123
8-71.	Service Sheet 1	8-123
8-75.	Service Sheet 2	8-124
8-87.	Service Sheet 3	8-128
8-114.	Service Sheet 4	8-150
8-117.	Command Mode Operation	8-150
8-130.	Data Mode Operation	8-153
8-155.	Service Sheet 5	8-163

APPENDIXES

APPENDIX	A.	References	Page A-1
	B.	Components of End Item List	
Section	I.	Introduction	B-1
	II.	Integral Components of End Item	B-2
APPENDIX	C.	Additional Authorization List	(N/A)
	D.	Maintenance Allocation	
Section	I.	Introduction	D-1
	II.	Maintenance Allocation Chart	D-3
	III.	Tools and Test Equipment Requirements	D-5
	IV.	Remarks (N/A)	
APPENDIX	E.	Expendable Supplies and Materials List (N/A)	

ILLUSTRATIONS

Figure		Page
1-1.	HP Model 436A Power Meter and Accessories Supplied	1-0
2-1.	Line Voltage Selection	2-1
2-2.	Power Cable HP Part Numbers Versus Mains Plugs Available	2-2
2-3.	Hewlett-Packard Interface Bus Connection	2-6
2-4.	BCD Interface Connection.	2-7
3-1.	Front and Rear Panel Controls, Connectors, and Indicators.	3-2
3-2.	Operator's Checks	3-6
3-3.	Operating Instructions	3-16
3-4.	Power Meter Response Curve (Settling Time for Analog Circuits)	3-26
3-5.	Measurement Timing Flow Chart (Settling Time for Digital Circuitry)	3-27
3-6.	Operating Program Simplified Flow Chart.	3-28
3-7.	Test of HP-IB Operation Flowchart	3-30
3-8.	436A Quick Programming Guide	3-31
3-9.	Calculating Measurement Uncertainties	3-42
3-10.	The Effect of Power Sensor Mismatch on Measurement Accuracy	3-44
3-11.	Calculating Measurement Uncertainty (Uncertainty in dB Known)	3-45
4-1.	Zero Carryover Test Setup.	4-2
4-2.	Instrument Accuracy Test Setup	4-4
4-3.	Calibration Factor Test Setup	4-6
4-4.	Power Reference Level Test Setup	4-8
5-1.	DC Offset Adjustment Setup	5-2
5-2.	Auto Zero Offset Adjustment Setup	5-3
5-3.	Spike Balance Adjustment Setup	5-4
5-4.	Multivibrator Adjustment Setup	5-5
5-5.	A-D Converter and Linear Meter Adjustment Setup	5-6

ILLUSTRATIONS (Cont'd)

Figure		Page
5-6.	Power Reference Oscillator Frequency Adjustment Setup	5-8
5-7.	Power Reference Oscillator Level Adjustment Setup	5-9
6-1.	Cabinet Parts	6-18
8-1.	Schematic Diagram Notes	8-2
8-2.	Front Panel Removal	8-6
8-3.	Operational Amplifier Functional Circuits.	8-8
8-4.	Dual D-Type Flip-Flop	8-9
8-5.	Four-Bit Bistable Latch.	8-9
8-6.	Dual J-K Master/Slave Flip-Flop and Gate Pulse Timing.	8-10
8-7.	Dual J-K Edge-Triggered Flip-Flop	8-10
8-8.	Programmable Counters	8-11
8-9.	3-Line to 8-Line Decoder	8-12
8-10.	8-Input Data Selector (Multiplexer)	8-13
8-11.	LED Display Driver	8-14
8-12.	Numeric Display	8-15
8-13.	MOS and TTL ROMs	8-15
8-14.	Power Meter Operating Cycle	8-17
8-15.	Operating Program Flow Chart	8-25
8-16.	HP-IB Verification Program (HP 9830A Calculator)	8-70
8-17.	HP-IB Verification Program (HP 9820A Calculator)	8-95
8-18.	Analog-to-Digital Converter Simplified Diagram and Waveforms	8-126
8-19.	HP-IB Listen Handshake Timing	8-151
8-20.	Data Valid Status Generator Timing	8-160
8-21.	Overall Block Diagram	8-167
8-22.	AC Gain, A-D Converter and Display Circuits Block Diagram	8-169
8-23.	Controller and Counters Block Diagram	8-171
8-24.	HP-IB (Option 022) Circuit Block Diagram	8-173
8-25.	BCD Interface (Option 024) Circuit Block Diagram	8-175
8-26.	AlAl Display Assembly Component Locations	8-177
8-27.	A1A2 Pushbutton Assembly Component Locations	8-177
8-28.	Front Panel Assembly Schematic Diagram	8-177
8-29.	A2 AC Gain Assembly Component, Test Point, and Adjustment Locations	8-179
8-30.	AC Gain Assembly Schematic Diagram	8-179
8-31.	A1A3 CAL FACTOR % Switch Assembly Component Locations	8-181
8-32.	A3 A-D Converter Assembly Components, Test Point, and Adjustment Locations	8-181
8-33.	A-D Converter Assembly Schematic Diagram	8-181
8-34.	A4 Counter Relative Assembly Component and Test Point Locations	8-183
8-35.	Counter Relative Assembly Schematic Diagram	8-183
8-36.	A5 Controller Assembly Component and Test Point Locations	8-185
8-37.	Controller Assembly Schematic Diagram	8-185
8-38.	A6 HP-IB (Option 022) Control Assembly Component and Test Point Locations	8-186
8-39.	HP-IB (Option 022) Control Assembly Schematic Diagram	8-187
8-40.	A7 HP-IB (Option 022) Input/Output Assembly Component and Test Point Locations	8-189
8-41.	HP-IB (Option 022) Input/Output Assembly Schematic Diagram	8-189
8-42.	A6 BCD Interface Control (Option 024) Assembly Component and Test Point Locations	8-191
8-43.	BCD Interface Control (Option 024) Assembly Schematic Diagram	8-191
8-44.	A8 Power Reference Oscillator Assembly Component, Test Point, and Adjustment Locations	8-193
8-45.	Power Reference Oscillator Assembly Schematic Diagram	8-193
8-46.	A9 Power Supply Rectifier and Regulator Assembly Component and Test Point Locations	8-195
8-47.	Rear Panel Mounted Power Supply Component Locations	8-195
8-48.	Power Supply Rectifier and Regulator Assembly Schematic Diagram	8-195
8-49.	Rear View of Front Panel (Removed)	8-197
8-50.	Top Internal View Standard Instrument	8-197
8-51.	Top Internal View HP-IB or BCD Interface	8-197

TABLES

Table		Page
1-1.	Specifications	1-2
1-2.	Recommended Test Equipment	1-5
2-1.	Circuit Options	2-4
2-2.	USA Standard Code for Information Interchange (ASCII)	2-5
3-1.	Message Reference Table	3-21
3-2.	Measurement Sequence	3-22
3-3.	Hewlett-Packard Interface Bus Input Program Codes	3-23
3-4.	Hewlett-Packard Interface Bus Output Data String	3-25
3-5.	Power Meter Remote Access Time to First Output Data Character	3-26
3-6.	Power Meter Output Data Printout for HP 5055A Digital Recorder	3-36
3-7.	BCD Output Data Codes	3-39
3-8.	BCD Programming Commands	3-41
4-1.	Zero Carryover Autorange Digital Readout Results	4-3
4-2.	Instrument Accuracy Test Results	4-5
4-3.	Instrument Accuracy Test Results for dB [REF] Mode	4-5
4-4.	Calibration Factor Test Results	4-7
4-5.	Performance Test Record	4-10
5-1.	Factory Selected Components	5-2
6-1.	Reference Designators and Abbreviations	6-2
6-2.	Replaceable Parts	6-4
6-3.	Code List of Manufacturers	6-19
7-1.	Manual Changes by Serial Number	7-1
8-1.	Logic Levels and Power Requirements	8-9
8-2.	Program Mnemonic Descriptions	8-20
8-3.	Standard Instrument Checkout	8-52
8-4.	HP-IB Circuit Troubleshooting	8-99
8-5.	BCD Interface Option 024 Checkout	8-117
8-6.	Operating Program Description	8-130
8-7.	Up/Down Count Control Logic Steering	8-145
8-8.	Function Decoder Clock Selection	8-155
8-9.	Programming Command Logic Operating Summary	8-155
8-10.	Power Meter Talk HP-IB Output Data Format	8-161

SERVICE SHEETS

Service Sheet		Page
1	Overall Block Diagram	8-166
2	AC Gain, A-D Converter, and Display Circuits Block Diagram (A1A1, A2, A3)	8-168
3	Controller and Counters Block Diagram (A1A2, A4, A5)	8-170
4	HP-IB (Option 022) Circuit Block Diagram (A6, A7)	8-172
5	BCD Interface (Option 024) Circuit Block Diagram (A6, A7)	8-174
6	Front Panel Assembly (A1A1, A1A2)	8-176
7	AC Gain Assembly (A2)	8-178
8	A-D Converter Assembly (A1A3, A3)	8-180
9	Counter Relative Assembly (A4)	8-182
10	Controller Assembly (A5)	8-184
11	HP-IB (Option 022) Control Assembly (A6)	8-186
12	HP-IB (Option 022) Input/Output Assembly (A7)	8-188
13	BCD Interface Control (Option 024) Assembly (A6, A7)	8-190
14	Power Reference Oscillator Assembly (A8)	8-192
15	Power Supply Rectifier and Regulator Assembly (A9, A10)	8-194

SAFETY CONSIDERATIONS

GENERAL

This product and related documentation must be reviewed for familiarization with safety markings and instructions before operation. This product has been designed and tested in accordance with international standards.

SAFETY SYMBOLS

Instruction manual symbol: the product will be marked with this symbol when it is necessary for the user to refer to the instruction manual (refer to Section II of this manual.

Indicates hazardous voltages.

Indicates earth (ground) terminal.

WARNING

The WARNING sign denotes a hazard. It calls attention to. a procedure, practice, or the like, which, if not correctly performed or adhered to, could result in personal injury. Do not proceed beyond a WARNING sign until the indicated conditions are fully understood and met.

CAUTION

The CAUTION sign denotes a hazard. It calls attention to an operating procedure, practice, or the like, which, if not correctly performed or adhered to, could result in damage to or destruction of part or all of the product. Do not proceed beyond a CAUTION sign until the indicated conditions are fully understood and met.

SAFETY EARTH GROUND

This is a Safety Class I product (provided with a protective earthing terminal). An uninterruptible safety earth ground must be provided from the main power source to the product input wiring terminals, power cord, or supplied power cord set. Whenever it is likely that the protection has been impaired, the product must be made inoperative and be secured against any unintended operation.

BEFORE APPLYING POWER

Verify that the product is configured to match the available main power source per the input power configuration instructions provided in this manual.

If this product is to be energized via an auto-transformer make sure the common terminal is connected to the neutral (grounded side of mains supply).

SERVICING

WARNINGS

Any servicing, adjustment, maintenance, or repair of this product must be performed only by qualified personnel.

Adjustments described in this manual may be performed with power supplied to the product while protective covers are removed. Energy available at many points may, if contacted, result in personal injury.

Capacitors inside this product may still be charged even when disconnected from its power source.

To avoid a fire hazard, only fuses with the required current rating and of the specified type (normal blow, time delay, etc.) are to be used for replacement.

SECTION 0
INSTRUCTIONS

0-1. SCOPE .

This manual describes Power Meter TS-3793/U (fig. 1-1) and provides operation and maintenance instructions. Throughout this manual, the TS-3793/U is referred to as the Hewlett-Packard Model 436A Power Meter.

0-2. INDEXES OF PUBLICATIONS.

a. DA Pam 310-4. Refer to the latest issue of DA Pam 310-4 to determine whether there are new editions, changes, or additional publications pertaining to the equipment.

b. DA Pam 310-7. Refer to DA Pam 310-7 to determine whether there are modification work orders (MWO'S) pertaining to the equipment.

0-3. FORMS AND RECORDS.

a. Reports of Maintenance and Unsatisfactory Equipment. Maintenance forms, records, and reports which are to be used by maintenance personnel at all levels of maintenance are listed in and prescribed by TM 38-750.

b. Report of Packaging Improvement Report) as prescribed in AR 700-58/ Report of Packaging and Handling Deficiencies. Fill out and forward NAVSUPINST 4030.29/AFR 71-13/MCO P4030.29A and DSAR 4145.8.

c. Discrepancy in Shipment Report (DISREP) (SF 361). Fill out and forward Discrepancy in Shipment Report (DISREP) (SF 361) as prescribed in AR 55-38/NAVSUPINST 4610.33A/AFR 75-18/MCO P4610.19B and DSAR 4500.15.

0-4. REPORTING OF EQUIPMENT IMPROVEMENT RECOMMENDATIONS (EIR).

EIR's will be prepared using DA Form 2407, Maintenance Requiest. Instructions for preparing EIR's are provided in TM 38-750, The Army Maintenance Management System. EIR's should be mailed directly to Commander, US Army Communications and Electronics Materiel Readiness Command and Fort Monmouth, ATTN: DRSEL-ME-MQ, Fort Monmouth, NJ 07703. A reply will be furnished directly to you.

0-5. ADMINISTRATIVE STORAGE.

Administrative storage of equipment issued to and used by Army activities shall be in accordance with TM 740-90-1.

0-6. DESTRUCTION OF ARMY ELECTRONICS MATERIEL.

Destruction of Army Electronics materiel to prevent enemy use shall be in accordance with TM 750-244-2.

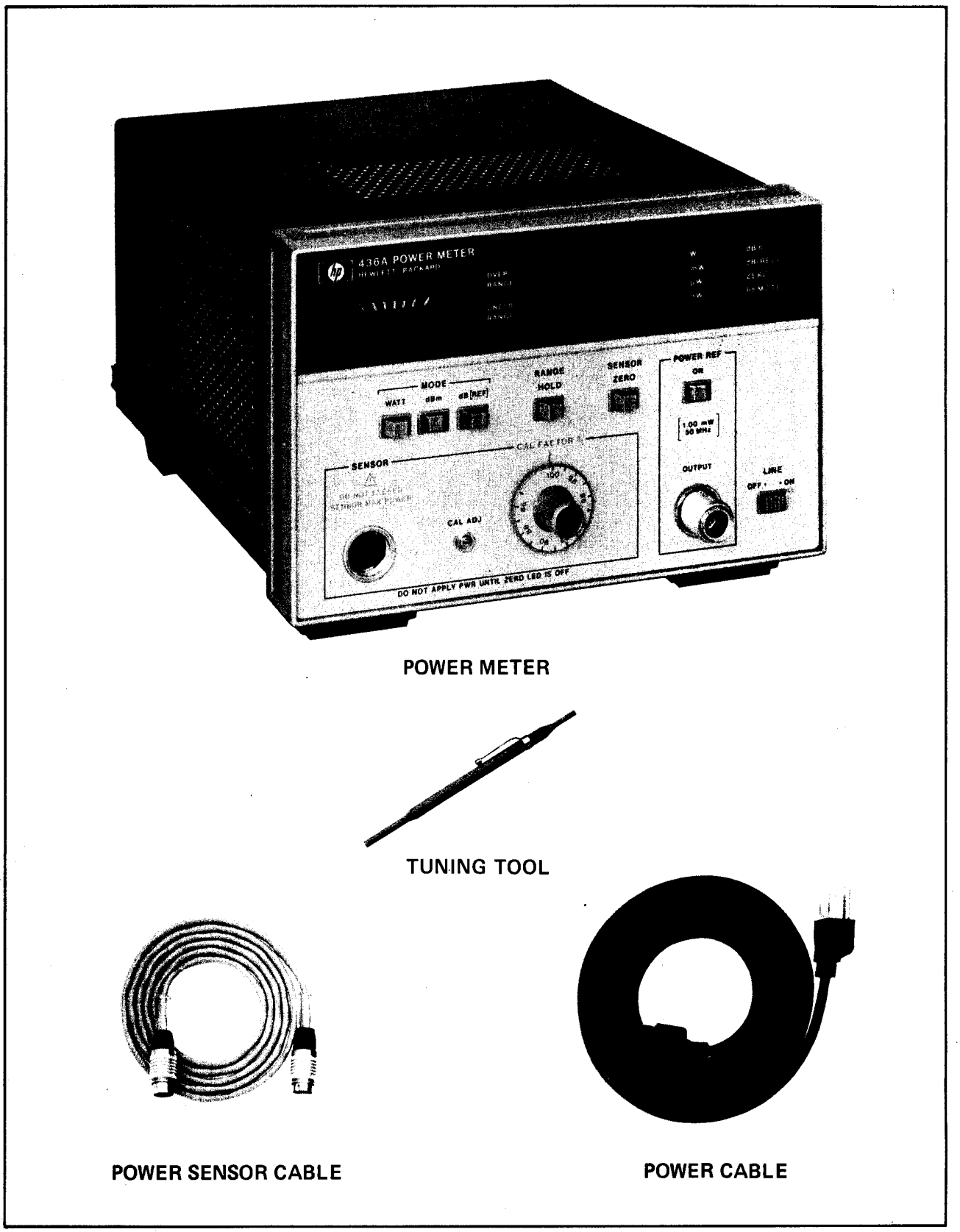

Figure 1-1. HP Model 436A Power Meter and Accessories Supplied

SECTION I
GENERAL INFORMATION

1-1. INTRODUCTION

1-2. This manual provides information pertaining to the installation, operation, testing, adjustment and maintenance of the HP Model 436A Power Meter.

1-3. Figure 1-1 shows the Power Meter with accessories supplied.

1-4. Packaged with this manual is an Operating Information Supplement. This is simply a copy of the first three sections of this manual. This supplement should be kept with the instrument for use by the operator. Additional copies of the Operating Information Supplement may be ordered through your nearest Hewlett-Packard office. The part numbers are listed on the title page of this manual.

1-5. On the title page of this manual, below the manual part number, is a "Microfiche" part number. This number may be used to order 4x6-inch microfilm transparencies of the manual. The microfiche package also includes the latest Manual Changes supplement as well as all pertinent Service Notes.

1-6. SPECIFICATIONS

1-7. Instrument specifications are listed in Table 1-1. These specifications are the performance standards or limits against which the instrument may be tested.

1-8. INSTRUMENTS COVERED BY MANUAL

1-9. Power Meter Options 002, 003, 009, 010, 011, 012, 013, 022, and 024 are documented in this manual. The differences are noted in the appropriate location such as OPTIONS in Section I, the Replaceable Parts List, and the schematic diagrams.

1-10. This instrument has a two-part serial number. The first four digits and the letter comprise the , serial number prefix. The last five digits form the sequential suffix that is unique to each instrument. The contents of this manual apply directly to instruments having the same serial number prefix(es) as listed under SERIAL NUMBERS on the title page.

1-11. An instrument manufactured after the printing of this manual may have a serial prefix that is not listed on the title page. This unlisted serial prefix indicates that the instrument is different from those documented in this manual. The manual for this instrument is supplied with a yellow Manual Changes supplement that contains change information that documents the differences.

1-12. In addition to change information, the supplement may contain information for correcting errors in the manual. To keep this manual as current and accurate as possible, Hewlett-Packard recommends that you periodically request the latest Manual Changes supplement. The supplement for this manual is keyed to the manual's print date and part number, both of which appear on the title page. Complimentary copies of the supplement are available from Hewlett-Packard.

1-13. For information concerning a serial number prefix not listed on the title page or in the Manual Changes supplement, contact your nearest Hewlett-Packard office.

1-14. DESCRIPTION

1-15. The Power Meter is a precision digital-readout instrument capable of automatic and manual measurement of RF and Microwave power levels. It is designed for interconnection with a compatible Power Sensor (refer to Table 1-1, Specifications) to form a complete power measurement system. The frequency and power range of the system are determined by the particular Power Sensor selected for use. With the Power Sensors available, the overall frequency range of the system is 100 kHz to 18 GHz, and the overall power range is -70 to +35 dBm.

1-16. Significant operating features of the Power Meter are as follows:

- **Digital Display:** The display is a four-digit, seven-segment LED, plus a sign when in the dBm or dB (REL) mode. It also has under- and

Table 1-1. Specifications

SPECIFICATIONS

Frequency Range:
100 kHz to 18 GHz (depending on power sensor used).

Power Range:
(display calibrated in watts, dBm, and dB relative to reference power level).

With 8481A, 8482A, or 8483A sensors: 50 dB with 5 full scale ranges of –20, –10, O, 10, and 20 dBm (10 μW to 100 mW).

With 8481H or 8482H sensors: 45 dB with 5 full scale ranges of 0, 10, 20, 30 and 35 dBm (1 mW to 3W).

With 8484A sensor: 50 dB with 5 full scale ranges of -60, -50, -40, -30, and -20 dBm (1 nW to 10

Accuracy:

Instrumentation[1]:
Watt mode: ±0.5%.
dBm mode: ±0.02 dB ±0.001 dB/°C.
dB [REL] mode[2]: ±0.02 dB ±0.001 dB/°C.

Zero: Automatic, operated by front panel switch.

Zero set: ±0.5% of full scale on most sensitive range. typical, ±1 count on other ranges.

Zero carry over: ±0.2% of full scale when zeroed on the most sensitive range.

Noise (typical, at constant temperature, peak change over any one-minute interval): 20 pW (8484A); 40 nW (8481A, 8482A, 8483A); 4 μW (8481H, 8482H).

Drift (1 hour, typical, at constant temperature after 24-hour warm-up); 20 pW (8484A); 10 nW (8481A, 8482A, 8483A); 1.0 μW (8481H, 8482 H).

Power Reference: Internal 50 MHz oscillator with Type N Female connector on front panel (or rear panel, Option 003 only).

Power output: 1.00 mW.
Factory set to ±0.7%, traceable to the National Bureau of Standards.
Accuracy: ±1.2% worst case (±0.9% rss) for one year (0°C to 55°C).

Response Time:
(0 to 99% of reading, five time constants)

Range 1 (most sensitive)	<10 seconds.
Range 2	<1 second
Range 3-5	<100 milliseconds.

(Typical, measured at recorder output).

Cal Factor:
16-position switch normalizes meter reading to account for calibration factor or effective efficiency, Range 85% to 100% in 1% steps.

Cal Adjustment:
Front panel adjustment provides capability to adjust gain of meter to match power sensor in use.

Recorder Output:
Proportional to indicated power with 1 volt corresponding to full scale and 0.316 volts to -5 dB; 1 kΩ output impedance, BNC connector.

RF Blanking Output:
Open collector TTL; low corresponds to blanking when auto-zero mode is engaged.

Display:
Digital display with four digits, 20% over-range capability on all ranges. Also, uncalibrated analog peaking meter to see fast changes.

Power Consumption:
100, 120, 220, or 240 V + 5%, -10%, 48 to 440 Hz, less than 20 watts (<23 watts with Option 022, or 024).

Dimensions:
134 mm High (5-1/4 inches).
213 mm Wide (8-3/8 inches).
279 mm Deep (11 inches).

Net Weight: 4.5 kg (10 lbs).

[1] Includes sensor non-linearity. Add +1.5 -1.0% on top range when using the 8481A, 8482A, or 8483A power sensors.

[2] Specifications are for within range measurements. For range-to-range accuracy add the range uncertainties.

DESCRIPTION (cont'd).

overrange indicators. There is a 20 percent overrange capability in all ranges. Large 10 mm (0.375 inch) digits are easy to see even in a high glare environment.

- **Auxiliary Meter:** Complements the digital display by showing fast changes in power level. Ideal for "peaking" transmitter output or other variable power devices.

- **Choice of Display in Watts, dBm or dB:** Absolute power can be read out in watts or dBm. Relative power measurements are made possibile with the dB [REF] switch. Pressing this switch zeros the display for any applied input power and any deviation from this reference is shown in dB with a resolution of ±0.01 dB. This capability is particularly useful in frequency response testing.

- **Power Units and Mode Annunciator:** The units annunciator provides error-free display interpretation by indicating appropriate power units in the watt mode. The mode annunciator indicates the mode of operation: dBm, dB (REL), ZERO or REMOTE.

- **Completely Autoranging:** The Power Meter automatically switches through its 5 ranges to provide completely "hands off" operation. The RANGE HOLD switch locks the Power Meter in one of its ranges when autoranging is not desired.

- **Automatic Sensor Recognition:** The Power Meter continually decodes the sensitivity of the Power Sensor to which it is connected. This information is then used to automatically control the digital display decimal point location and, when WATT MODE operation is selected, to light the appropriate power units annunciator.

- **Auto Zero:** Zeroing the meter is accomplished by merely depressing the SENSOR ZERO switch and waiting until the display shows all zeros before releasing it. The meter is ready to make measurements as soon as the zero light in the mode annunciator goes off.

- **RF Blanking Output:** Open collector TTL; low corresponds to blanking when the sensor zero is engaged, " May be used to remove the RF input signal connected to the power sensor.

- **Calibration Accuracy:** A 1.00 mW, 50 MHz reference output is available at the front panel for calibrating the Power Meter and the Power Sensor as a system. Calibration is accomplished using the CAL ADJ and CAL FACTOR % controls. The CAL ADJ control compensates for slight differences in sensitivity associated with a particular type of Power Sensor and the CAL FACTOR % control compensates for mismatch losses and effective efficiency over the frequency range of the Power Sensor.

- **Recorder Output:** Provides a linear output with respect to the input power level. For each range, a +1.00 Vdc output corresponds to a full scale input power level. Refer to Table 1-1, Specifications, for the full-scale range values associated with the various types of Power Sensors available.

1-17. Two programming interfaces are available as options for the Power Meter - a Hewlett-Packard Interface Bus (HP-IB) Option 022; and a BCD Interface, Option 024. Both interfaces allow full remote control of all the power meter functions (CAL FACTOR can be programmed to either 100% or the CAL FACTOR which has been manually set on the front panel). These options may be added by the user at a later time as his requirements grow.

1-18. OPTIONS

1-19. Input-Output Options

1-20. Option 002. A rear panel input connector is connected in parallel with the front panel input connector.

1-21. Option 003. A rear panel input connector replaces the standard front panel input connector; a rear panel POWER REF OUTPUT connector replaces the standard front panel connector.

1-22. Cable Options

1-23. A 1.5 metre (5 ft.) Power Sensor Cable is normally supplied. The 1.5 metre cable is omitted with any cable option. The options and cable lengths are shown in the table below.

Option	Cable Length
009	3.0 m (10 ft)
010	6.1 m (20 ft)
011	15.2 m (50 ft)
012	30.5 m (100 ft)
013	61.0 m (200 ft)

1-24. Remote Control Options

1-25. Options 022 and 024 add remote interface capability to the Power Meter. Option 022 is compatible with the Hewlett-Packard Interface Bus (AH1, C0, DC2, DT1, L2, LE0, PP0, RL2, SH1, SR0, T3, TE0); Option 024 uses dedicated input/output lines to enable remote programming and to provide parallel, BCD-coded output data.

1-26. Option 022 or 024 may be ordered in kit form under HP part numbers 00436-60035 and 00436-60034 respectively. Each kit contains a control assembly printed-circuit board, an input/output assembly printed circuit board, and a data cable for interconnection.

1-27. ACCESSORIES SUPPLIED

1-28. The accessories supplied with the Power Meter are shown in Figure 1-1.

a. The 1.5 metre (5 ft.) Power Sensor Cable, HP 00436-60026, is used to couple the Power Sensor to the Power Meter. The 1.5 metre cable is omitted with any cable option.

b. The line power cable may be supplied in one of four configurations. Refer to the paragraph entitled Power Cables in Section II.

c. An alignment tool for adjusting the CAL ADJ front panel control (HP Part No. 8710-0630).

1-29. EQUIPMENT REQUIRED BUT NOT SUPPLIED

1-30. To form a complete RF power measurement system, a Power Sensor such as the HP Model 8481A must be connected to the Power Meter via the Power Sensor cable.

1-31. EQUIPMENT AVAILABLE

1-32. The HP Model 11683A Range Calibrator is recommended for performance testing, adjusting, and troubleshooting the Power Meter. The Power Meter's range-to-range accuracy and auto-zero operation can easily be verified with the Calibrator. It also has the capability of supplying a full-scale test signal for each range.

1-33. Two extender boards (HP Part Numbers 5060-0258, and 5060-0990; 24 and 44 pins respectively) enable the Power Meter printed circuit assemblies to be accessed for service. Rubber bumpers (HP Part No. 0403-0115) should be installed on the extender boards to prevent the boards from touching.

1-34. RECOMMENDED TEST EQUIPMENT

1-35. The test equipment shown in Table 1-2 is recommended for use during performance testing, adjustments, and troubleshooting. To ensure optimum performance of the Power Meter, the specifications of a substitute instrument must equal or exceed the critical specifications shown in the table.

1-36. SAFETY CONSIDERATIONS

1-37. The Power Meter is a Safety Class I instrument. This instrument has been designed according to international safety standards.

1-38. This operating and service manual contains information, cautions, and warnings which must be followed by the user to ensure safe operation and to retain the instrument in safe condition.

Table 1-2. Recommended Test Equipment

Instrument Type	Critical Specifications	Suggested Model	Use *
Range Calibrator	Chopped dc output for each range referenced to 1 mW range	HP 11683A	P,A,T
Digital Voltmeter	Function: DC, resistance Range Resistance: 200 ohms Vdc: 100 m Vdc, 1000 mVdc, 10 Vdc, 100 Vdc 10MΩ input impedance 6-digit resolution (±0.05% of reading, +0.02% of range)	HP 3490A	P,A,T
Power Meter	Range: 1 mW Transfer Accuracy (input -to-output): 0.2%	HP 432A	P, A
Thermistor Mount	SWR: 1.05,50 MHz Accuracy: ±0.5% at 50 MHz **	HP 478A-H75	P, A
Counter	Frequency Range: 220 Hz, 50 MHz Sensitivity: 100 m Vrms Accuracy: 0.01%	HP 5245L	A
Oscilloscope	Bandwidth: dc to 50 MHz Vertical Sensitivity: 0.2 V/division Horizontal Sensitivity: 1 ms/division	HP 180C/ 1801A/1821A	T
Logic Analyzer	Clock Input: 60 kHz Trigger Word: 8 Bits Bit Input: TTL Display Word: 8 Bits	HP 1601L	T

*P = Performance Tests; A = Adjustments; T = Troubleshooting

**Traceable to the National Bureau of Standards

SECTION II
INSTALLATION

2-1. INTRODUCTION

2-2. This section provides all information necessary to install the Power Meter. Covered in the section are initial inspection, power requirements, line voltage selection, interconnection, circuit options, mounting, storage, and repackaging for shipment.

2-3. INITIAL INSPECTION

2-4. Inspect the shipping container for damage. If the shipping container or cushioning material is damaged, it should be kept until the contents of the shipment have been checked for completeness and the instrument has been checked mechanically and electrically. The contents of the shipment should be as shown in Figure 1-1. Procedures for checking electrical performance are given in Section IV. If the contents are incomplete, if there is mechanical damage or defect, or if the instrument does not pass the electrical performance test, notify the nearest Hewlett-Packard office. If the shipping container is damaged, or the cushioning material shows signs of stress, notify the carrier as well as the Hewlett-Packard office. Keep the shipping materials for the carrier's inspection.

2-5. PREPARATION FOR USE

2-6. Power Requirements

2-7. The Power Meter requires a power source of 100, 120, 220, or 240 Vac, +5%, -0%, 48 to 440 Hz single phase. Power consumption is approximately 20 watts.

WARNING

If this instrument is to be energized via an autotransformer for voltage reduction, make sure the common terminal is connected to the earthed pole of the power source.

2-8. Line Voltage Selection

CAUTION

BEFORE SWITCHING ON THIS INSTR UMENT, make sure the instrument is set to the voltage of the power source.

2-9. Figure 2-1 provides instructions for line voltage and fuse selection. The line voltage selection card and the proper fuse are factory installed for 120 Vac operation.

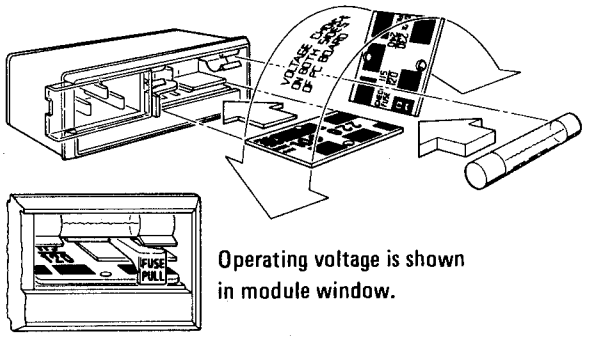

SELECTION OF OPERATING VOLTAGE

1. Open cover door, pull the FUSE PULL lever end rotate to left. Remove the fuse.
2. Remove the Line Voltage Selection Card. Position the card so the line voltage appears at top-left corner. Push the card firmly into the slot.
3. Rotate the Fuse Pull lever to its normal position. Insert a fuse of the correct value in the holder. Close the cover door.

Figure 2-1. Line Voltage Selection

2-10. Power Cable

WARNING

BEFORE SWITCHING ON THIS INSTRUMENT, the protective earth terminals of this instrument must be connected to the protective conductor of the (mains) power cord. The mains plug shall only be inserted in a socket outlet provided with a protective earth con tact. The protective action must not be negated by the use of an extension cord (power cable) without a protective conductor (grounding).

Power Cable (cont'd)

2-11. In accordance with international safety standards, this instrument is equipped with a three-wire power cable. When connected to an appropriate ac power receptacle, this cable grounds the instrument cabinet. The type of power cable plug shipped with each instrument depends on the country of destination. Refer to Figure 2-2 for the part numbers of the power cable plugs available.

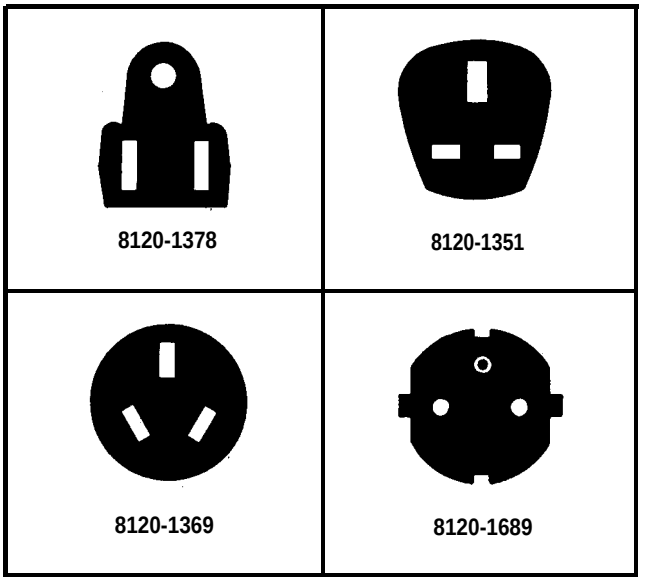

Figure 2-2. Power Cable HP Part Numbers Versus Mains Plugs Available

2-12. Circuit Options

2-13. Jumper options are available for selecting a filtered or unfiltered dc RECORDER OUTPUT, for changing the TALK and LISTEN addresses when Hewlett-Packard Interface Bus Option 022 is installed, and for selecting the desired programming of the SENSOR ZERO function when BCD Interface Option 024 is installed. Table 2-1 lists the factory installed jumper connections and indicates how they may be reconnected to select the options.

2-14. Interconnections

2-15. Power Sensor. For proper system operation, the Power Sensor must be connected to the Power Meter using either the Power Sensor cable supplied with the Power Meter or any of the optional Power Sensor cables specified in Section I. Each of these cables employs a sensitivity line to enable the Power Meter to determine the operating range of the Power Sensor and thus, the true value of the input signal. For example, the 8481A and 8481H Power Sensors provide identical full scale outputs in response to input signal levels of 100 milliwatts and 3 watts, respectively. The difference in their sensitivity codes is detected by the Power Meter, however, and the Power Meter digital readout is automatically configured to indicate the appropriate value.

2-16. Hewlett-Packard Interface Bus Option 022. Interconnection data for Hewlett-Packard Interface Bus Option 022 is provided in Figure 2-3. Power Meter programming and output data format is described in Section III, Operation.

2-17. BCD Interface Bus Option 024. Interconnection data for BCD Interface Option 024 is provided in Figure 2-4. Power Meter programming and output data format is described in Section III, Operation.

2-18. Mating Connectors

2-19. Interface Connectors. Interface mating connectors for Options 022 and 024 are indicated in Figures 2-3 and 2-4, respectively.

2-20. Coaxial Connectors. Coaxial mating connectors used with the Power Meter should be US MIL-C-39012-compatible type N male or 50-ohm BNC male.

2-21. Operating Environment

2-22. The operating environment should be within the following limitations:

Temperature . . . . . 0°C to +55°C
Humidity . . . , ... <95% relative
Altitude . . . . . <4570 m (15,000 ft)

2-23. Bench Operation

2-24. The instrument cabinet has plastic feet and a fold-away tilt stand for convenience in bench operation. (The plastic feet are shaped to ensure self-aligning of the instruments when stacked.) The tilt stand raises the front of the instrument for easier viewing of the control panel.

2-25. Rack Mounting

2-26. Instruments that are narrower than full rack width may be rack mounted using Hewlett-Packard sub-module cabinets. If it is desired to rack mount one Power Meter by itself, order half-module kit, HP Part Number 5061-0057. If it is desired to rack mount two Power Meters side by side, order the following items:

Rack Mounting (cont'd)

Rack Mount Flange Kit (two provided) HP Part Number 5020-8862.

b. Front Horizontal Lock Links (four provided) HP Part Number 0050-0515.

Rear Horizontal Lock Links (two provided HP Part Number 0050-0516.

2-27 In addition to the rack mounting hardware, a front handle assembly (two provided) is also available for the Power Meter. The part number is HP 5060-9899.

2-28. STORAGE AND SHIPMENT

2-29. Environment

2-30. The instrument should be stored in a clean dry environment. The following environmental limitations apply to both storage and shipment:

Temperature . . . . . -40°C to +75°C
Humidity . . . . . <95% relative
Altitude . . . . . <7620 m (25,000 ft)

2-31. Packaging

2-32. Original Packaging. Containers and materials identical to those used in factory packaging are available through Hewlett-Packard offices. If the instrument is being returned to Hewlett-Packard for servicing, attach a tag indicating the type of service required, return address, model number, and full serial number. Also mark the container FRAGILE to assure careful handling. In any correspondence refer to the instrument by model number and full serial number.

2-33. Other Packaging. The following general instructions should be used for re-packaging with commercially available materials:

a. Wrap the instrument in heavy paper or plastic. (If shipping to a Hewlett-Packard office or service center, attach a tag indicating the service required, return address, model number, and full serial number.)

b. Use a strong shipping container. A double-wall carton made of 275-lb test material is adequate.

c. Use enough shock-absorbing material (3 to 4-inch layer) around all sides of instrument to provide firm cushion and prevent movement in the container. Protect the control panel with cardboard.

d. Seal the shipping container securely.

e. Mark the shipping container FRAGILE to assure careful handling.

Table 2-1. Circuit Options

Assembly	Service Sheet	Jumper Functions
A-D Converter Assembly A3	8	The factory-installed jumpers provide a filtered dc RECORDER OUTPUT which corresponds to the average power input to the Power Sensor. If external filtering is desired, reconnect the jumpers to provide the optional unfiltered dc RECORDER OUTPUT as shown on Service Sheet 8.
BCD Interface Control Assembly A6 (Option 024)	13	The factory-installed jumper enables the SENSOR ZERO function to be programmed only when the REMOTE ENABLE input to the Power Meter is low. If it is desired to program the SENSOR ZERO function independently of the remote enable input, reconnect the jumper to provide +5 V to U12C-9 as shown on Service Sheet 8.
Hewlett-Packard Interface Bus Control Assembly A6 (Option 022)	11	The factory installed jumpers select TALK address M and LISTEN address - (minus sign) for the Power Meter. As shown on Service Sheet 11, either of these addresses causes a high enable output at U2C-10. If it is desired to change these addresses, refer to Service Sheet 11 and Table 2-2 and reconnect the jumpers to decode the appropriate ASCII characters. For example, to change to TALK address E and LISTEN address 70, the jumpers would be reconnected as follows. ASCII code (logic 1=0V) D D D D D D D 1 1 1 1 1 1 1 0 0 0 0 0 0 0 7 6 5 4 3 2 1 M 1 0 0 1 1 0 1 E 1 0 0 0 1 0 1 — Note: DI07 and DI06 must always be 1 and 0, respectively, for TALK address. - 0 1 0 1 1 0 1 % 0 1 0 0 1 0 1 — Note: DI07 and DI06 must always be 0 and 1, respectively, for LISTEN address. Jumpers M U1B-13 HI01 - U1B-12 LI02 U1B-10 HI03 U1B- 9 HI04 U2C- 9 HI05 — E, % , Disconnect jumper from HI04 and reconnect to LI04.

Table 2-2. USA Standard Code for Information Interchange (ASCII)

b_7 b_6 b_5 BITS					0_{0_0}	0_{0_1}	0_{1_0}	0_{1_1}	1_{0_0}	1_{0_1}	1_{1_0}	1_{1_1}	NOTE 3
b_4 ↓	b_3 ↓	b_2 ↓	b_1 ↓	Column→ Row↓	0	1	2	3	4	5	6	7	
0	0	0	0	0	NUL	D LE	SP	0	@	P	‘	p	
0	0	0	1	1	SOH	DC1	!	1	A	Q	a	q	
0	0	1	0	2	STX	DC2	“	2	B	R	b	r	
0	0	1	1	3	ETX	DC3	#	3	C	S	c	s	
0	1	0	0	4	EOT	DC4	$	4	D	T	d	t	
0	1	0	1	5	ENQ	NAK	%	5	E	Ul	e	u	
0	1	1	0	6	ACK	SYN	&	6	F	V	f	v	
0	1	1	1	7	BEL	ETB	‘	7	G	w	g	w	
1	0	0	0	8	BS	CAN	(	8	H	x	h	x	
1	0	0	1	9	HT	EM	)	9	I	Y	i	y	
1	0	1	0	10	LF	SUB	*	:	J	Z	i	z	
1	0	1	1	11	VT	ESC	+	;	K	[	k	(	
1	1	0	0	12	FF	FS	,	<	L	\	l	¦	
1	1	0	1	13	CR	GS	–	=	M	]	m	)	
1	1	1	0	14	SO	RS	.	>	N	^	n	~	
1	1	1	1	15	SI	US	I	?	O	___	o	DEL	

NOTE 3 NOTE 1 NOTE 2

NOTE 1: HP-IB valid LISTEN addresses
NOTE 2: HP-IB valid TALK addresses
NOTE 3: Logic 1 = OV

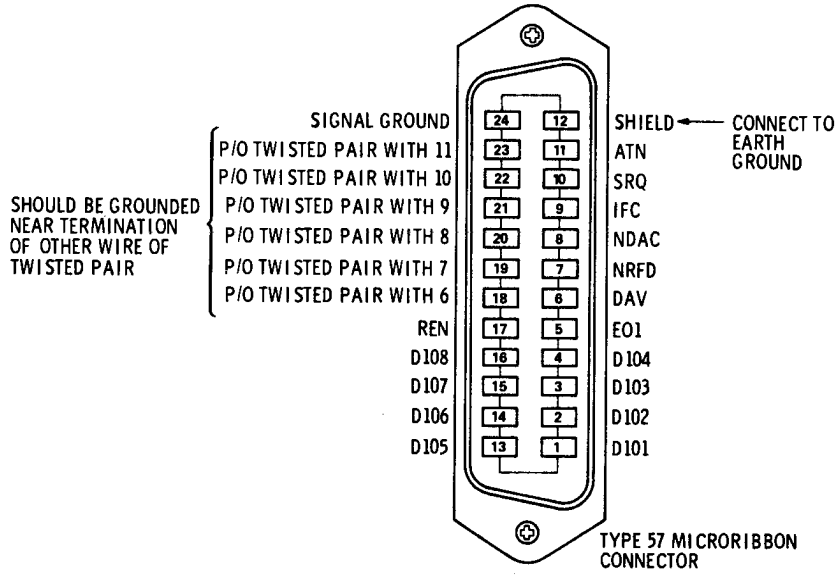

Logic Levels

The Hewlett-Packard Interface Bus logic levels are TTL compatible, i.e., the true (1) state is 0.0 Vdc to 0.4 Vdc and the false (0) state is +2.5 Vdc to +5.0 Vdc.

Programming and Output Data Format

Refer to Section III, Operation.

Mating Connector

HP 1251-0293; Amphenol 57-30240.

Mating Cables Available

HP 10631A, 1.0 metre (3 ft.); HP 10631B, 2.0 metres (6 ft.)
HP 10631C, 4.0 metres (12 ft.); HP 10631D, 0.5 metre (1.5 ft.)

Cabling Restrictions

1. A Hewlett-Packard Interface Bus System may contain no more than 1.8 metres (6 ft.) of connecting cable per instrument.
2. The maximum accumulative length of connecting cable for any Hewlett-Packard Interface Bus System is 20.0 metres (65.6 ft.)

Figure 2-3. Hewlett-Packard Interface Bus Connection

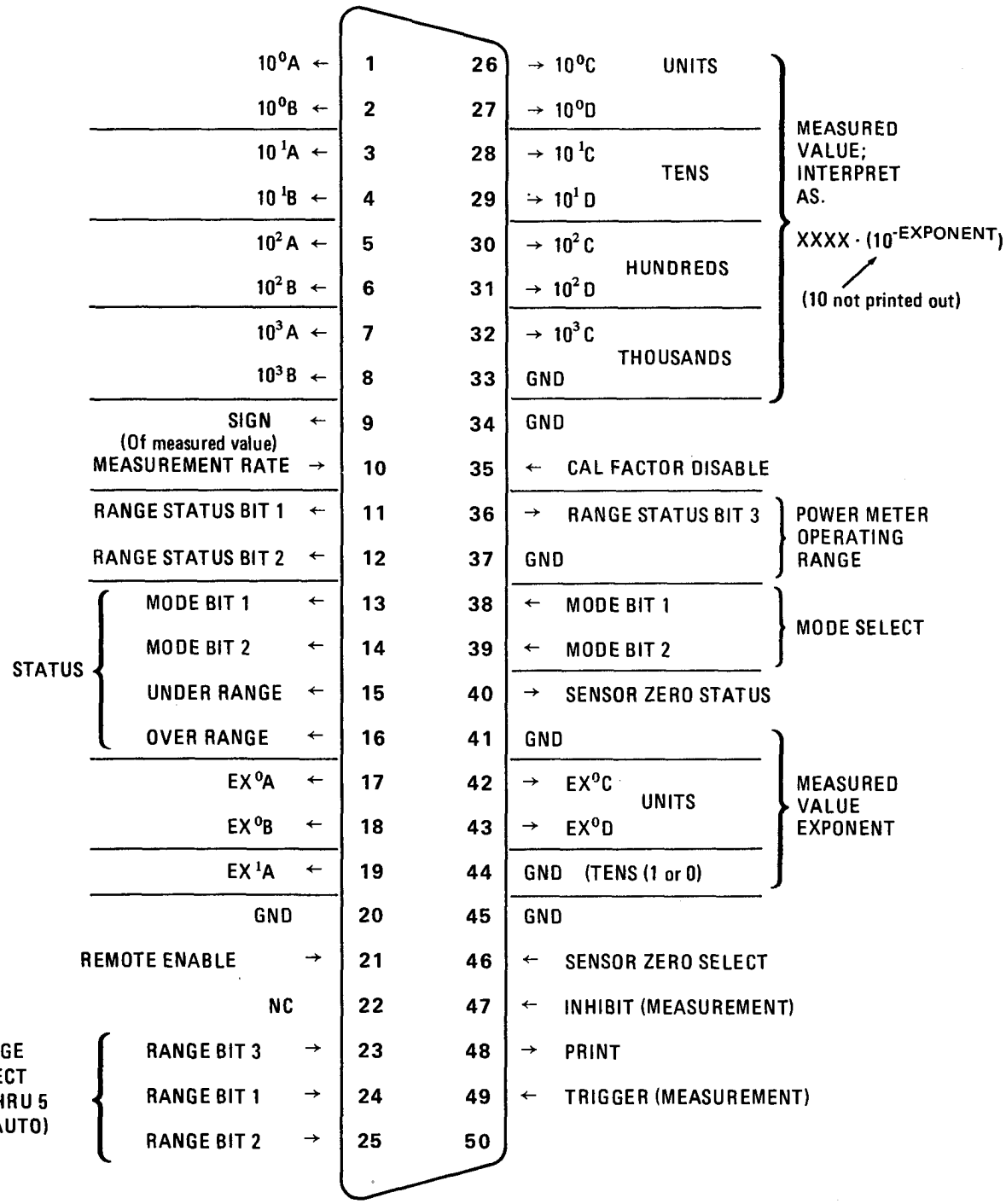

Logic Levels

The BCD Interface logic levels are TTL compatible, i.e., the true state is 0.0 Vdc to 0.4 Vdc and the false state is +2.5 Vdc to +5.0 Vdc.

Programming and Output Data Format

Refer to Section III, Operation

Mating Connectors - HP 1251-0086

Mating Cables Available - HP 562A-16C for 5055A Printer

Figure 2-4. BCD Interface Connection

SECTION III
OPERATION

3-1. INTRODUCTION

3-2. This section provides complete operating information for the Power Meter. Included in the section are a description of all front- and rear-panel controls, connectors, and indicators (panel features), operator's checks, operating instructions, power measurement accuracy considerations, and operator's maintenance.

3-3. Since the power Meter can be operated locally as well as remotely via Hewlett-Packard Interface Bus Option 022 or BCD Remote Interface Option 024, respectively, the information in this section is arranged accordingly. All information unique to a particular operating configuration is designated as such; where no distinction is made, the information is applicable to both standard and optional instrument operation.

3-4. PANEL FEATURES

3-5. Front and rear panel features of the Power Meter are described in Figure 3-1. This figure contains a detailed description of the controls, connectors and indicators.

3-6. OPERATOR'S MAINTENANCE

3-7. The only maintenance the operator should normally perform is replacement of the primary power fuse located within Line Module Assembly A11. For instructions on how to change the fuse, refer to Section II, Line Voltage Selection.

CAUTION

Make sure that only fuses with the required rated current and of the specified type (normal blow, time delay, etc.) are used for replacement. The use of repaired fuses and the short-circuiting of fuseholders must be avoided.

3-8. OPERATOR'S CHECKS

3-9. A procedure for verifying the major functions of the Power Meter is provided in Figure 3-2. The procedure is divided into three parts: Local Operation, Remote BCD Operation, and Remote Hewlett-Packard Interface Bus Operation. For a standard instrument it is only necessary to perform the Local Operation procedure. For units equipped with either of the remote options, the Local Operation procedure should be performed first to establish a reference against which remote operation can be verified. Information covering remote programming of the Power Meter is provided in the following paragraphs, and a Hewlett-Packard Interface Bus Verification Program is provided in Section VIII, Service.

3-10. LOCAL OPERATING INSTRUCTIONS

3-11. Figure 3-3 provides general instructions for operating the Power Meter via the front-panel controls.

WARNING

Any interruption of the protective (grounding) conductor (inside or outside the instrument) or disconnecting the protective earth terminal is likely to make this instrument dangerous. Intentional interruption is prohibited.

FRONT AND REAR PANEL FEATURES

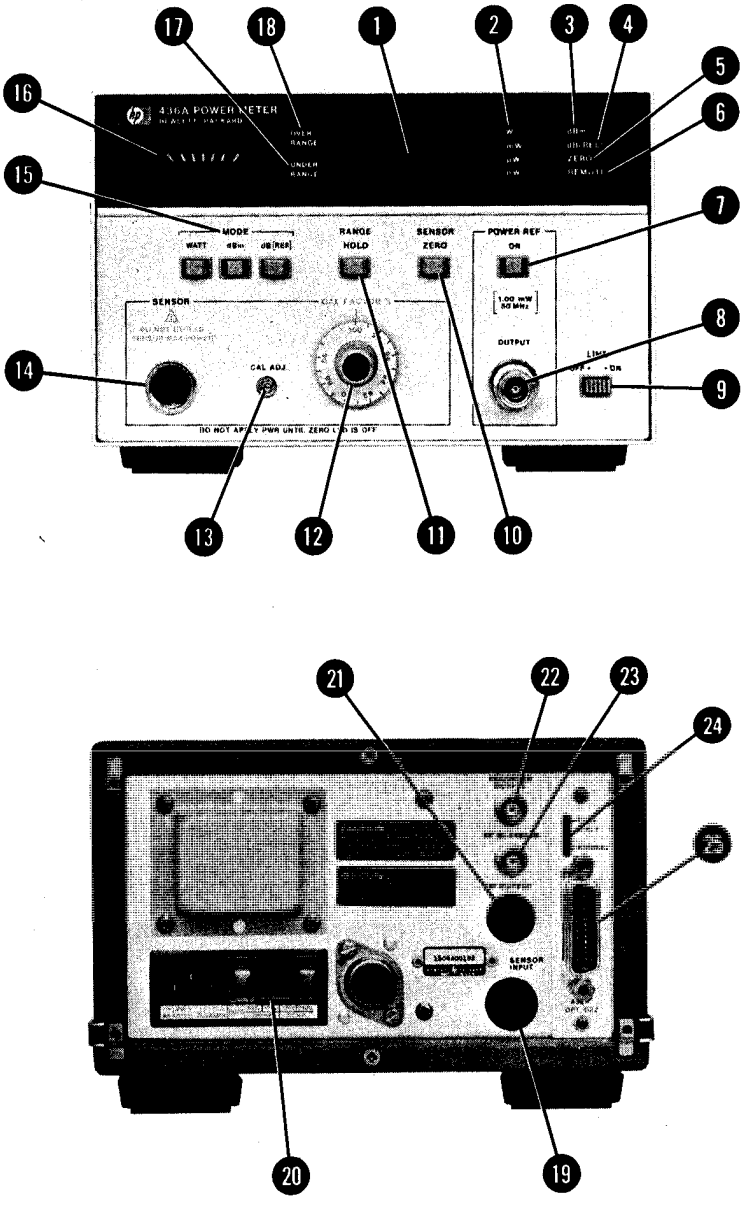

Figure 3-1. Front and Rear Panel Controls, Connector, and Indicators (1 of 4)

FRONT PANEL FEATURES

1 Digital Readout: Indicates sign and decimal value of RF input power in Watts, dBm, or in dB relative to a stored reference.

2 Range Lamps (W,mW, μW, nW): Enabled in WATT MODE. Light to indicate level of Digital Readout indication.

3 dBm: Lights to indicate that dBm MODE is selected and Digital Readout indication is in dBm.

4 dB (REL): Lights to indicate that dB RELATIVE MODE is selected and Digital Readout indication is in dB with respect to stored reference level.

5 ZERO: Lights to indicate that power sensor auto-zero circuit is enabled and 23 RF BLANKING output is active.

6 REMOTE: Associated with BCD Option 024 and Hewlett-Packard Interface Bus Option 022. Lights to indicate that front-panel switches are disabled and power meter operation is being controlled via remote interface.

7 POWER REF ON: Alternate action pushbutton switch. When set to ON (in), enables 8 POWER REF OUTPUT.

8 POWER REF OUTPUT: Enabled when 7 POWER REF switch is set to ON. Provides RF output of 1.00 mW ± 0.70% for system calibration.

9 LINE ON-OFF: Alternate action pushbutton switch. Applies ac line power to Power Meter when set to ON (in).

10 SENSOR ZERO: Spring-loaded pushbutton switch. When pressed, enables Power Sensor auto zero loop for a period of approximately 4 seconds (5 ZERO lamp remains lit for the duration of this period).

NOTE

In order to auto-zero the Power Sensor, no RF input power may be applied while the 5 ZERO lamp is lit. If any RF input power is applied, it will introduce an offset that will affect all subsequent measurements.

11 RANGE HOLD: Alternate action pushbutton switch. When set to off (out) allows Power Meter to autorange as required to track changes in RF input power level. When set to on (in), locks Power Meter in last range enabled during autoranging.

12 CAL FACTOR %: Rotary switch which changes the gain of the Power Meter amplifier circuits to compensate for mismatch losses and effective efficiency of the Power Sensor. A chart of CAL FACTOR % versus frequency is printed on each Power Sensor.

13 CAL ADJ: Screwdriver adjustment for calibrating the Power Meter and any Power Sensor to a known standard.

14 SENSOR: Provides input connection for Power Sensor via Power Sensor Cable.

15 MODE: Interlocking pushbutton switches which configure the Power Meter to indicate average RF input power in watts, in dBm, or in dB with respect to a stored reference.

WATT: Alternate action pushbutton switch. When set to on (in), selects WATT Mode. (Power Meter is configured to indicate RF input power in watts, milliwatts, microwatts, or nanowatts.

dBm: Alternate action pushbutton switch. When set to on (in), selects dBm Mode. (Power Meter is configured to indicate RF input power in dBm.)

dB [REF]: Spring-loaded pushbutton switch. When pressed, selects dB Relative Mode. (RF input power level displayed on 1 Digital Readout is stored as dB reference and 1, Digital Readout changes to 0. Then Power Meter is configured to indicate changes in RF input level in dB with respect to stored reference.)

NOTE

When the dBm relative mode is selected, the WATT Mode or dBm Mode can be selected by pressing the 15 WATT MODE or dBm Mode switch and the power applied to the Sensor is displayed on the 1 Digital

(continued)

Figure 3-1. Front and Rear Panel Controls, Connectors, and Indicators (2 of 4)

FRONT AND REAR PANEL FEATURES

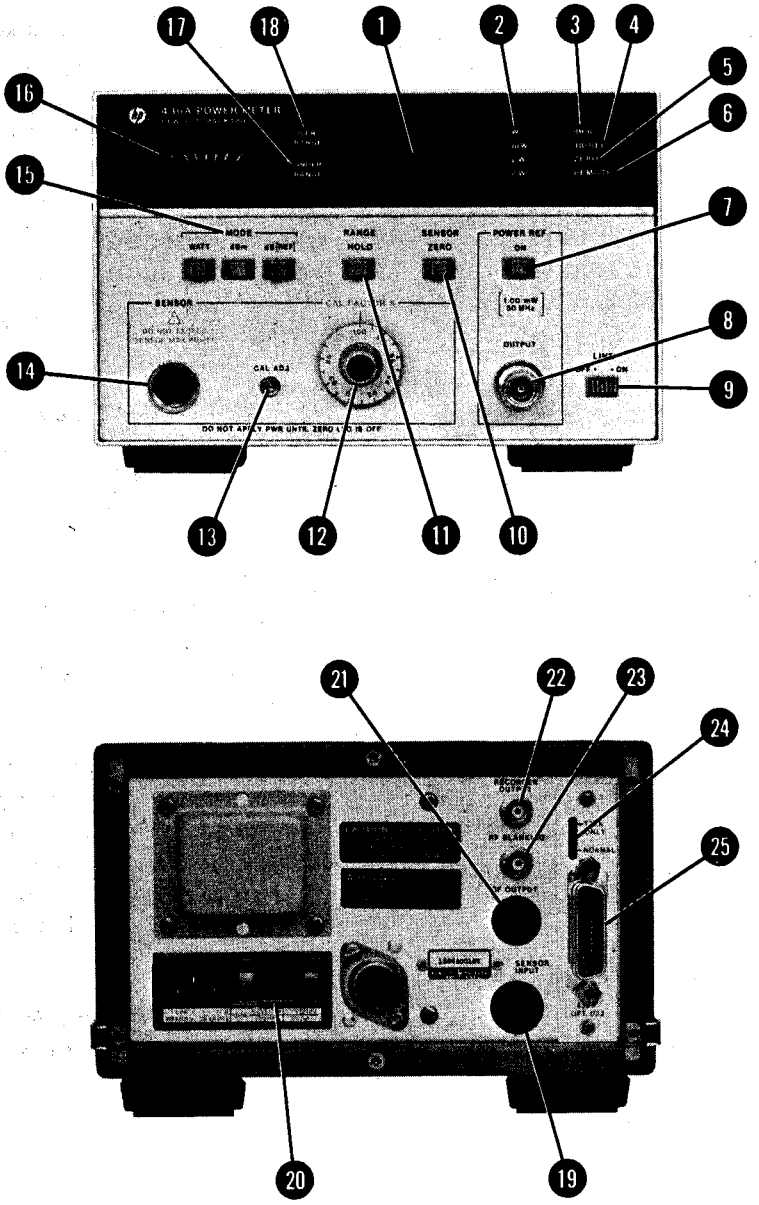

Figure 3-1. Front and Rear Panel Controls, Connector, and Indicators (3 of 4)

FRONT PANEL FEATURES (cont'd)

(Note cont'd)

Readout. To return to the dB Relative Mode without changing the stored reference, press the 15 *WATT MODE or dBm MODE switch just enough to release the previously selected MODE switch. Do not press the* 15 *dB [REF] MODE switch or a new reference will be entered.*

16 **Auxiliary Meter:** Provides a linear display with respect to RF input power. For any given range, a full-scale meter indication corresponds to the highest indication that can be obtained on the Digital Display.

17 **UNDER RANGE:** Lights to indicate that RF input power level is too small to be measured on selected range (autoranging disabled), or on Power Meter lowest range (autoranging enabled).

18 **OVER RANGE:** Lights to indicate that RF input power level is too large to be measured on selected range (autoranging disabled), or on Power Meter highest range (autoranging enabled).

REAR PANEL FEATURES

19 **SENSOR INPUT:** Available only with Options 002 or 003. Option 002 has a rear panel input connector wired in parallel with the front panel 14 SENSOR connector. In Option 003, this rear panel input connector replaces the 14 SENSOR front panel connector.

20 **Line Power Module:** Permits operation from 100, 120, 220, or 240 Vac. The number visible in window indicates nominal line voltage to which instrument must be connected (see Figure 2-1). Protective grounding conductor connects to the instrument through this module.

WARNING

Any interruption of the protective (grounding) conductor inside or outside the instrument or disconnecting of the protective earth terminal is likely to make the instrument dangerous. Intentional interruption is prohibited. (See Section II.)

21 **POWER REF OUTPUT:** Takes the place of the front panel 8 POWER REF OUTPUT connector (Option 003 only).

22 **RECORDER OUTPUT:** Provides a linear output with respect to the input power. +1.00 Vdc corresponds to a full scale 1 Digital Readout indication on the range selected (refer to Table1-1).The minimum load which may be coupled to the output is 1 MΩ.

23 **RF BLANKING:** Contact closure to ground when 10 SENSOR ZERO switch is pressed. May be used to remove RF input signal during automatic zeroing operation.

24 **TALK ONLY/NORMAL:** Associated with Hewlett-Packard Interface Bus Option 022 only. NORMAL position configures the Power Meter as a basic talker. TALK ONLY position is normally used only when there is no controller connected to the interface bus (e.g., when Power Meter is interconnected with an HP 5150A recorder).

25 **Interface Connector:** For Power Meter connection to remote interface Options 022 and 024.

Figure 3-1. Front and Rear Panel Controls, Connectors, and Indicators (4 of 4)

OPERATOR'S CHECKS

LOCAL OPERATION

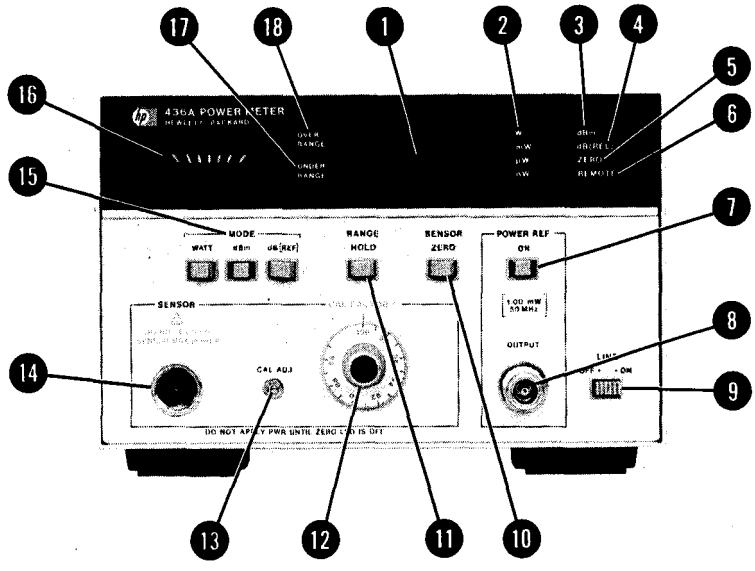

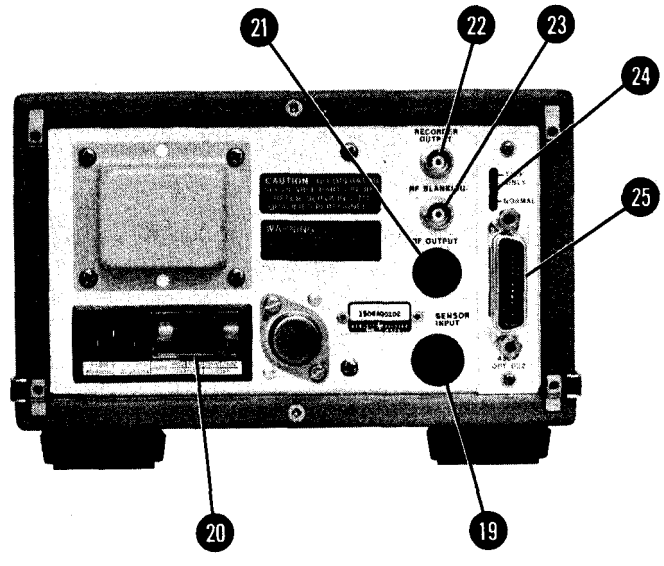

CAUTIONS

BEFORE CONNECTING LINE POWER TO THIS INSTRUMENT, ensure that all devices connected to this instrument are connected to the protective (earth) ground.

BEFORE SWITCHING ON THIS INSTRUMENT, ensure that the line power (mains) plug is connected to a three-conductor line power outlet that has a protective (earth) ground. (Grounding one conductor of a two-conductor outlet is not sufficient.)

Figure 3-2. Operator's Checks (1 of 10)

OPERATOR'S CHECKS

LOCAL OPERATION (cont'd)

1. BEFORE SWITCHING ON THIS INSTRUMENT, ensure that the power transformer primary is matched to the available line voltage, the correct fuse is installed, and the safety precautions are taken. See Power Requirements, Line Voltage Selection, Power Cables, and associated warnings and cautions in Section II.

NOTE

If Power Meter is equipped with BCD or Hewlett-Packard Interface Bus option, unplug data bus cable from connector J7 on rear panel before performing this procedure. When data bus cable is unplugged, Power Meter is automatically configured for Local operation via front-panel controls.

2. Connect the Power Sensor to the Power Meter with the Power Sensor Cable.

3. Connect the Power Sensor to the (8) POWER REF OUTPUT connector.

4. Connect the Power Cable to the power outlet and (20) Line Power Module receptacle, and set the (9) LINE switch to ON (in).

5. Set the remaining Power Meter switches as follows:

(12) CAL FACTOR%	100
(7) POWER REF	off (out)
(15) MODE	WATT
(11) RANGE HOLD	off (out)

NOTE

Perform steps 6 through 19 only if Power Meter is connected to 8481A, 8482A, or 8483A Power Sensor. If Power Meter is connected to 8481H or 8482H Power Sensor, proceed to step 20.

6. Press and hold the (10) SENSOR ZERO switch until the digital readout stabilizes. While the switch is held depressed, verify that the (5) ZERO lamp is lit and that the (23) RF BLANKING output is 0.0±0.4V.

7. Release the (10) SENSOR ZERO switch and verify that the (5) ZERO lamp remains lit for approximately four seconds. When the (5) ZERO lamp goes out, verify that the (1) Digital Readout indicates 0.00±0.02 μW.

8. Set the (11) RANGE HOLD and (7) POWER REF switches to ON (in). Verify that the (18) OVER-RANGE lamp lights and that the (1) Digital Readout blanks (1_._μW).

NOTE

Underscore (_) indicates blanked digit.

9. Set the (11) RANGE HOLD switch to off (out). Verify that the Power Meter autoranges to the 1 mW range and that the (18) OVER RANGE lamp goes out.

Figure 3-2. Operator's Checks (2 of 10)

OPERATOR'S CHECKS

LOCAL OPERATION (cont'd)

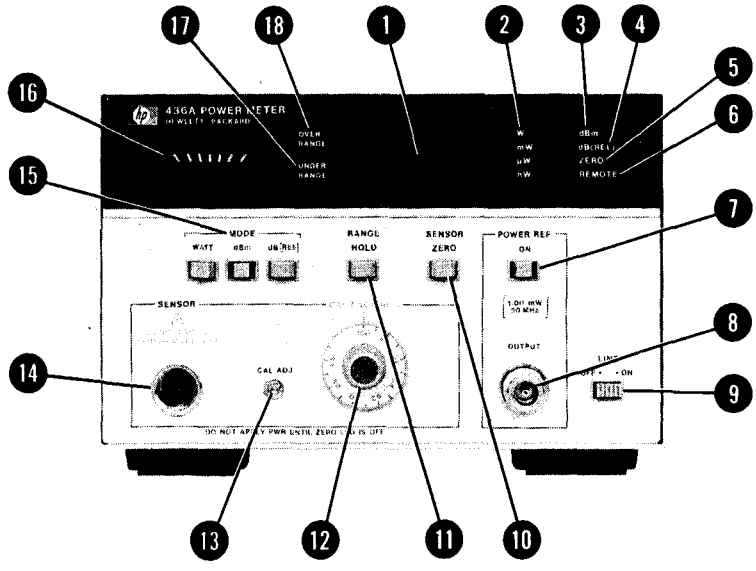

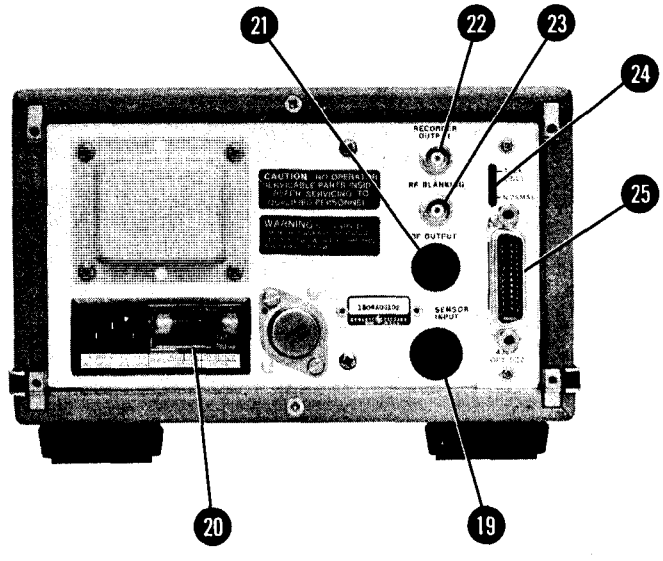

10. Adjust the 13 CAL ADJ control so that the 1 Digital Readout indicates 1.000 mW. Verify that the pointer on the 16 Auxiliary Meter is aligned between the last two marks, and that the 22 RECORDER OUTPUT is approximately 1.000 Vdc.

11. Rotate the 12 CAL FACTOR % switch through its range and verify that the 1 Digital Readout indication increases slightly for each successive step. Then return the 12 CAL FACTOR % switch to 100.

Figure 3-2. Operator's Checks (3 of 10)

OPERATOR'S CHECKS

LOCAL OPERATION (cont'd)

12. Set the 15 dBm MODE switch to on (in) and verify that the 1 Digital Readout indicates −0.0 ± 0.01 dBm.

13. Set the 11 RANGE HOLD switch to on (in) and the 7 POWER REF switch to off (out). Verify that the 17 UNDER RANGE lamp lights and that the 1 Digital Readout blanks (−1_._dBm).

14. Set the 11 RANGE HOLD switch to off (out) and verify that the 1 Digital Readout blanked indication changes to −3_._. The new indication verifies that the Power Meter has autoranged to the most sensitive dBm range.

15. Set the 11 RANGE HOLD and 7 POWER REF switches to ON (in). Verify that the 18 OVER RANGE lamp lights and that the 1 Digital Readout blanked indication changes to −1_._.

16. Set the 11 RANGE HOLD switch to off (out) and verify that the 1 Digital Readout indicates −0.00 ± 0.01 dBm. This new indication verifies that the Power Meter has autoranged properly.

17. Adjust the 13 CAL ADJ control so that the 1 Digital Readout indicates −2.00 dBm.

18. Press the 15 dB [REF] MODE switch and verify that the 3 dBm lamp goes out, the 4 dB (REL) lamp lights, and the 1 Digital Readout changes to −0.00. This step verifies that the Power Meter can store a dB reference value and indicate RF input power levels in dB with respect to the stored reference.

19. Set the 15 WATT Mode switch to on (in) and readjust the 13 CAL ADJ control so that the 1 Digital Readout indicates 1.000 mW.

NOTE

Steps 20 through 28 are performed in lieu of steps 6 through 19 when the Power Meter is connected to an 8481H or an 8482H Power Sensor.

20. Press and hold the 10 SENSOR ZERO switch until the 1 Digital Readout stabilizes. While the switch is held pressed, verify that the 5 ZERO lamp is lit and that the 23 RF BLANKING output is 0.0 ± 0.4V.

21. Release the 10 SENSOR ZERO switch and verify that the 5 ZERO lamp remains lit for approximately four seconds. When the 5 ZERO lamp goes out, verify that the 1 Digital Readout indicates 0.00 ± 0.02 mW.

22. Set the 7 POWER REF switch to ON (in) and adjust the 13 CAL ADJ control so that the 1 Digital Readout indicates 1.000 mW. Verify that the pointer on the 16 Auxiliary Meter is aligned between the last two marks, and that the 22 RECORDER OUTPUT is approximately 1.000 Vdc.

23. Rotate the 12 CAL FACTOR % switch through its range and verify that the 1 Digital Readout increases slightly for each successive step. Then return the 12 CAL FACTOR % switch to 100.

24. Set the 15 dBm MODE switch to on (in) and verify that the 1 Digital Readout indicates −0.00 ± 0.01 dBm.

Figure 3-2. Operator's Checks (4 of 10)

OPERATOR'S CHECKS

LOCAL OPERATION (cont'd)

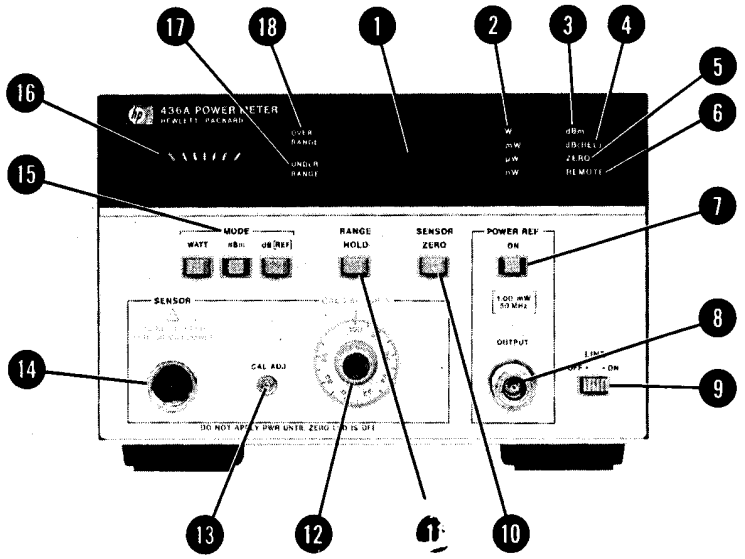

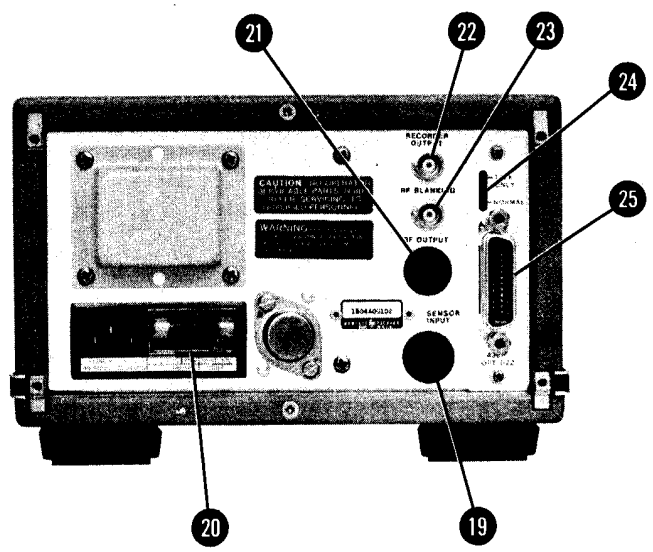

25. Set the 7 POWER REF switch to off (out). Verify that the 17 UNDER RANGE lamp lights and that the 1 Digital Readout blanks (—1 _ . _ dBm).

26. Set the 7 POWER REF switch to ON (in) and adjust the 13 CAL ADJ control so that the 1 Digital Readout indictes –2.00 dBm.

Figure 3-2. Operator's Checks (5 of 10)

OPERATOR'S CHECKS

LOCAL OPERATION (cont'd)

27. Press the (15) dB [REF] Mode switch and verify that the (3) dBm lamp goes out, the (4) dB (REL) lamp lights, and the (1) Digital Readout changes to −0.00. This step verifies that the Power Meter can store a dB reference value and indicate input power levels in dB with respect to the stored reference.

28. Set the (15) WATT Mode switch to on (in) and readjust the (13) CAL ADJ control so that the (1) Digital Readout indicates 1.000 mW.

REMOTE BCD OPERATION

CAUTIONS

BEFORE CONNECTING LINE POWER TO THIS INSTRUMENT, ensure that all devices connected to this instrument are connected to the protective (earth) ground.

BEFORE SWITCHING ON THIS INSTRUMENT, ensure that the line power (mains) plug is connected to a three-conductor line power outlet that has a protective (earth) ground. (Grounding one conductor of a two-conductor outlet is not sufficient.)

1. Connect the Power Sensor to the Power Meter with the Power Sensor Cable.

2. Connect the Power Sensor to the (8) POWER REF OUTPUT connector.

3. Connect the Power Cable to the power outlet and (20) Line Power Module receptacle, and set the (9) LINE ON-OFF switch to ON (in).

4. Set the Power Meter (12) CAL FACTOR % switch to 100 and the (7) POWER REF switch to off (out).

NOTE

Perform steps 5 through 20 only if Power Meter is connected to HP 8481A, 8482A, or 8483A Power Sensor. If Power Meter is connected to 8481H or 8482H Power Sensor, proceed to step 21.

5. Set the Remote Enable input to the Power Meter to logical 1 (0.0 ± 0.4V), and program the Power Meter as follows:

Mode	WATT
Range	1
(10) SENSOR ZERO	ON
(12) CAL FACTOR %	enabled

6. Verify that the Power Meter (6) REMOTE, (2) μW, and (5) ZERO lamps are lit and that the (23) RF BLANKING output is 0.0 ± 0.4V.

7. Program the SENSOR ZERO function to off and verify that the (5) ZERO lamp remains lit for approximately four seconds. When the (5) ZERO lamp goes out, verify that the (1) Digital Readout indicates 0.00 ± 0.02 μW.

Figure 3-2. Operator's Checks (6 of 10)

OPERATOR'S CHECKS

REMOTE BCD OPERATION (cont'd)

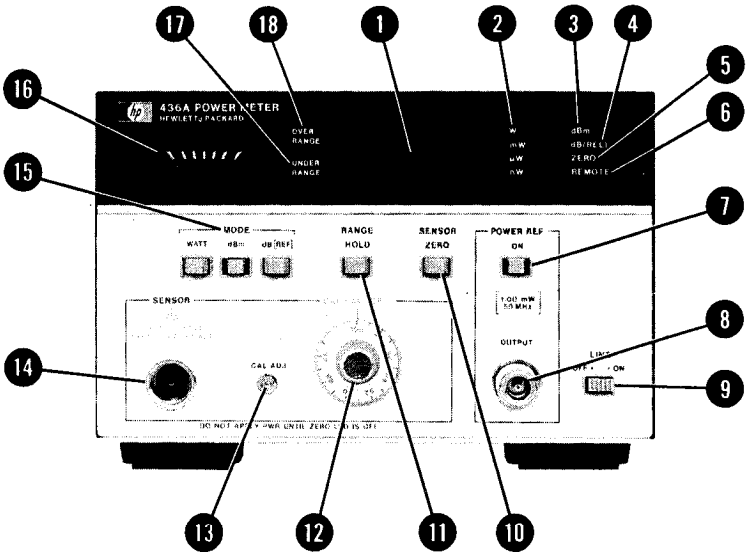

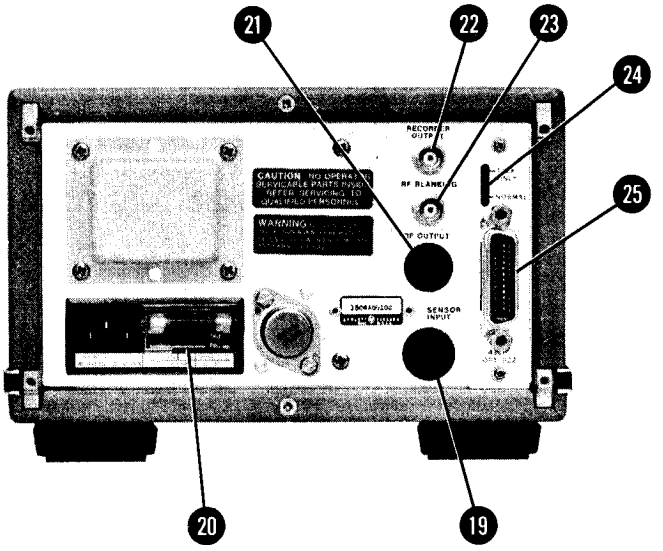

8. Set the 7 POWER REF switch to ON. Verify that the 18 OVER RANGE lamp lights and the 1 Digital Readout blanks (1_ . _ _ μW).

NOTE

Underscore (_) indicates blanked digit.

9. Program the Power Meter to Range 3. Verify that the 2 mW lamp lights and that the 18 OVER RANGE lamp goes out.

Figure 3-2. Operator's Checks (7 of 10)

OPERATOR'S CHECKS

REMOTE BCD OPERATION (cont'd)

10. Adjust the (13) CAL ADJ control so that the (1) Digital Readout indicates 1.000 mW. Verify that the pointer on the (16) Auxiliary Meter is aligned between the last two marks, and that the (22) RECORDER OUTPUT is approximately 1.00 Vdc.

11. Rotate the (12) CAL FACTOR % switch through its range and verify that the (1) Digital Readout increases slightly for each successive step.

12. Set the CAL FACTOR disable programming input to logical 1 (0V) and verify that the (1) Digital Readout indication changes back to 1.000 mW.

13. Program the Power Meter to the dBm MODE and verify that the (1) Digital Readout indicates −0.00 ± 0.01 dBm.

14. Set the (7) POWER REF switch to off (out). Verify that the (17) UNDER RANGE lamp lights and that the (1) Digital Readout blanks (−1_ . _ dBm).

15. Program the Power Meter to Range 1, and verify that the (1) Digital Readout blanked indication changes to −3_ . _ . The new indication verifies that the Power Meter is on the most sensitive dBm range.

16. Set the (7) POWER REF switch to ON (in). Verify that the (18) OVER RANGE lamp lights and that the (1) Digital Readout blanked indication changes to −1_ . _ .

17. Program the Power Meter for Auto Ranging and verify that the (1) Digital Readout indication changes to −0.00 ± 0.01 dBm. This new indication verifies that the Power Meter has autoranged properly.

18. Adjust the (13) CAL ADJ control so that the (1) Digital Readout indicates −2.00 dBm.

19. Program the Power Meter to the dB [REF] MODE. Verify that the (3) dBm lamp goes out, the (4) dB (REL) lamp lights, and the (1) Digital Readout changes to −0.00. This step verifies that the Power Meter can store a dB reference value and indicate RF input power levels in dB with respect to the stored reference.

20. Program the Power Meter to the WATT MODE and readjust the (13) CAL ADJ control so that the (1) Digital Readout indicates 1.000 mW.

NOTE

Steps 21 through 31 are performed in lieu of steps 5 through 20 when the Power Meter is connected to an HP 8481H or an HP 8482H Power Sensor.

21. Set the Remote Enable input to the Power Meter to logical 1 (0.0 ± 0.4 Vdc) and program the Power Meter as follows:

Mode	WATT
Range	AUTO
(10) SENSOR ZERO	ON
(12) CAL FACTOR %	enabled

22. Verify that the Power Meter (6) REMOTE, (2) μW, and (5) ZERO lamps are lit and that the (23) RF BLANKING output is 0.0 ± 0.4V.

Figure 3-2. Operator's Checks (8 of 10)

OPERATOR'S CHECKS

REMOTE BCD OPERATION (cont'd)

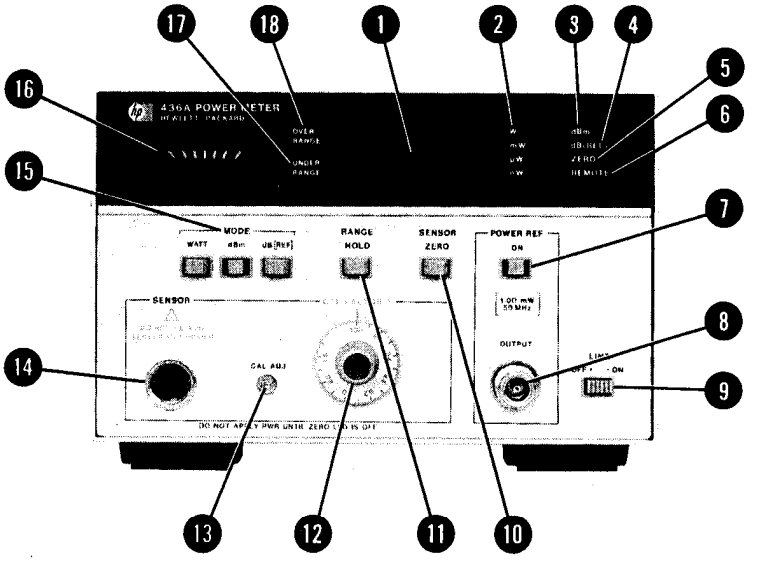

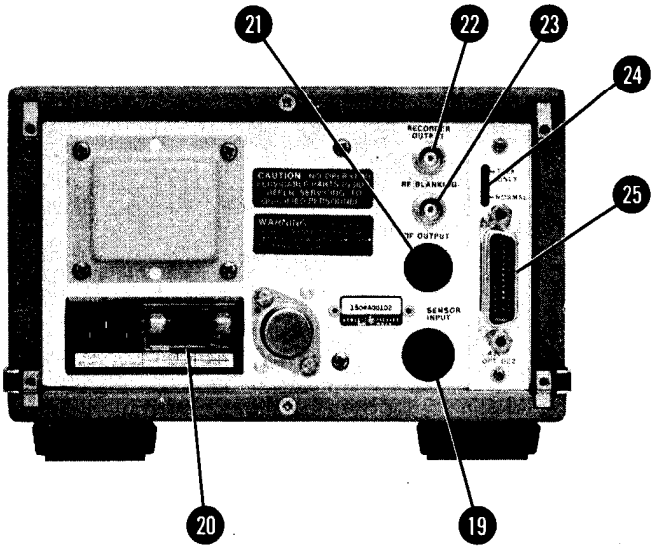

23. Program the SENSOR ZERO function to off and verify that the 5 ZERO lamp remains lit for approximately four seconds. When the 5 ZERO lamp goes out, verify that the 1 Digital Readout indicates 0.00 ± 0.02 mW.

24. Set the 7 POWER REF switch to ON (in) and adjust the 13 CAL ADJ control so that the 1 Digital Readout indicates 1.000 mW. Verify that the pointer on the 16 Auxiliary Meter is aligned between the last two marks and that the 22 RECORDER OUTPUT is approximately 1.000 Vdc.

Figure 3-2. Operator's Checks (9 of 10)

OPERATOR'S CHECKS

REMOTE BCD OPERATION (cont'd)

25. Rotate the (12) CAL FACTOR % switch through its range and verify that the (1) Digital Readout indication increases slightly for each successive step.

26. Set the CAL FACTOR Disable programming input to logical 1 (0V) and verify that the (1) Digital Readout indication changes back to 1.000 mW.

27. Program the Power Meter to the dBm MODE and verify that the (1) Digital Readout indicates −0.00 ± 0.01 dBm.

28. Set the (7) POWER REF switch to off (out). Verify that the (17) UNDER RANGE lamp lights and that the (1) Digital Readout blanks (−1 _ . _ dBm).

29. Set the (7) POWER REF switch to ON (in) and adjust the (13) CAL ADJ control so that the (1) Digital Readout indicates −2.00 dBm.

30. Program the Power Meter to the dB [REF] MODE and verify that the (3) dBm lamp goes out, the (4) dB (REL) lamp lights, and the (1) Digital Readout changes to −0.00. This step verifies that the Power Meter can store a dB reference value and indicate input power levels in dB with respect to the stored reference.

31. Program the Power Meter to the WATT MODE and readjust the (13) CAL ADJ control so that the (1) Digital Readout indicates 1.000 mW.

REMOTE HEWLETT-PACKARD INTERFACE BUS OPERATION

Check Power Meter operation using the verification program provided in Section VIII, SERVICE.

Figure 3-2. Operator's Checks (10 of 10)

OPERATING INSTRUCTIONS

LOCAL OPERATION

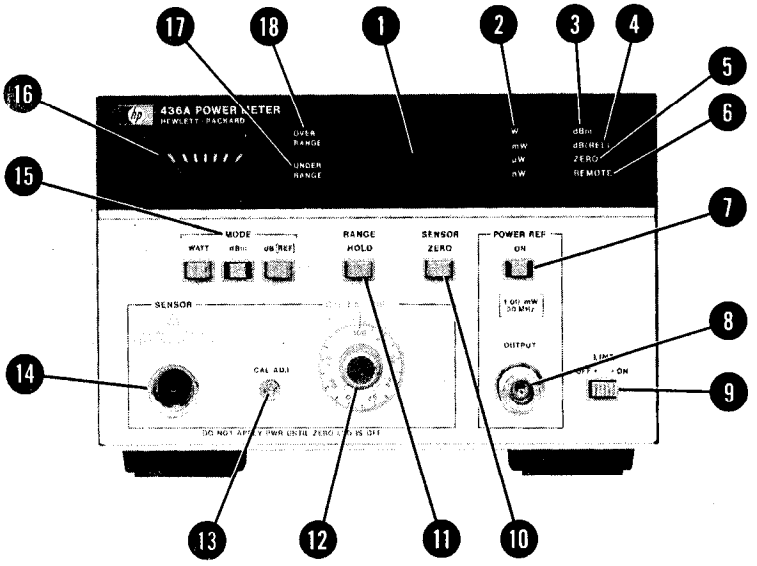

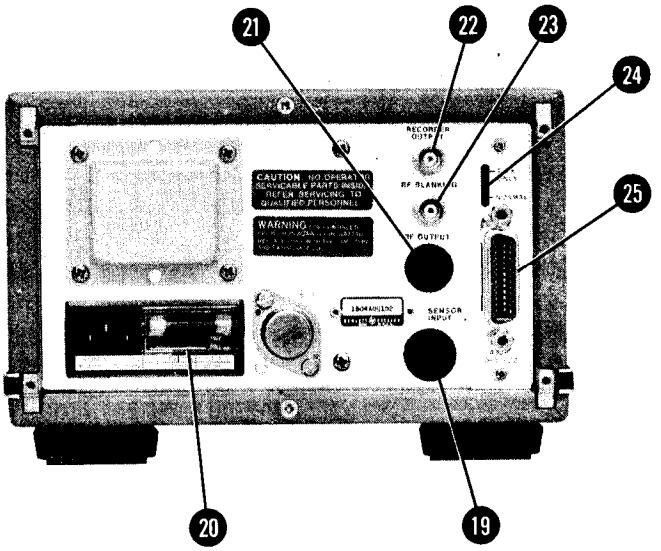

CAUTIONS

BEFORE CONNECTING LINE POWER TO THIS INSTRUMENT, ensure that all devices connected to this instrument are connected to the protective (earth) ground.

BEFORE SWITCHING ON THIS INSTRUMENT, ensure that the line power (mains) plug is connected to a three-conductor line power outlet that has a protective (earth) ground. (Grounding one conductor of a two-conductor outlet is not sufficient.)

Figure 3-3. Operating Instructions (1 of 4)

OPERATING INSTRUCTIONS

LOCAL OPERATION (cont'd)

1. BEFORE SWITCHING ON THIS INSTRUMENT, ensure that the power transformer primary is matched to the available line voltage, the correct fuse is installed, and safety precautions are taken. See Power Requirement, Line Voltage Selection, Power Cables, and associated warnings and cautions in Section II.

NOTE

If Power Meter is equipped with BCD or Hewlett-Packard Interface Bus Option, either unplug data bus cable from connector J7 on rear panel or program Power Meter for Local operation as described under Operating Instructions paragraph.

2. Connect the Power Sensor to the Power Meter with the Power Sensor Cable.

3. Connect the Power Cable to the power outlet and (20) Line Power Module receptacle and set the (9) LINE ON-OFF switch to ON (in).

4. Set the remaining Power Meter switches as follows:

(12) CAL FACTOR %	100
(7) POWER REF	off (out)
(15) MODE	WATT
(11) RANGE HOLD	off (out)

5. Press and hold the (10) SENSOR ZERO switch and wait for the (1) Digital Readout to stabilize. Then verify that the (5) ZERO lamp is lit and that the (1) Digital Readout indicates 0.00 ±0.02.

NOTE

When auto-zeroing the Power Sensor, no RF input power may be applied while the ZERO lamp is lit. If any RF input power is applied, it will introduce an offset that will affect subsequent measurements.

6. Release the (10) SENSOR ZERO switch and wait approximately 4 seconds for the (5) ZERO lamp to go out.

7. Connect the Power Sensor to the (8) POWER REF OUTPUT connector and set the (7) POWER REF switch to ON (in). Then adjust the (13) CAL ADJ control so that the (1) Digital Readout indicates 1.000 mW.

8. Set the (7) POWER REF switch to off (out) and disconnect the Power Sensor from the (8) POWER REF OUTPUT connector.

9. Locate the calibration curve on the Power Sensor cover and determine the CAL FACTOR for the measurement frequency; set the Power Meter (12) CAL FACTOR % switch accordingly.

CAUTION

See Operating Precautions in the Power Sensor Operating and Service Manuals for maximum power levels which may be safely coupled to this system. Levels which exceed the limits may damage the Power Sensor, Power Meter or both.

10. Set the (15) MODE and (11) RANGE HOLD switches for desired operation and connect the Power Sensor to the RF source.

Figure 3-3. Operating Instructions (2 of 4)

OPERATING INSTRUCTIONS

HEWLETT-PACKARD INTERFACE BUS (HP-IB) OR BCD REMOTE OPERATION

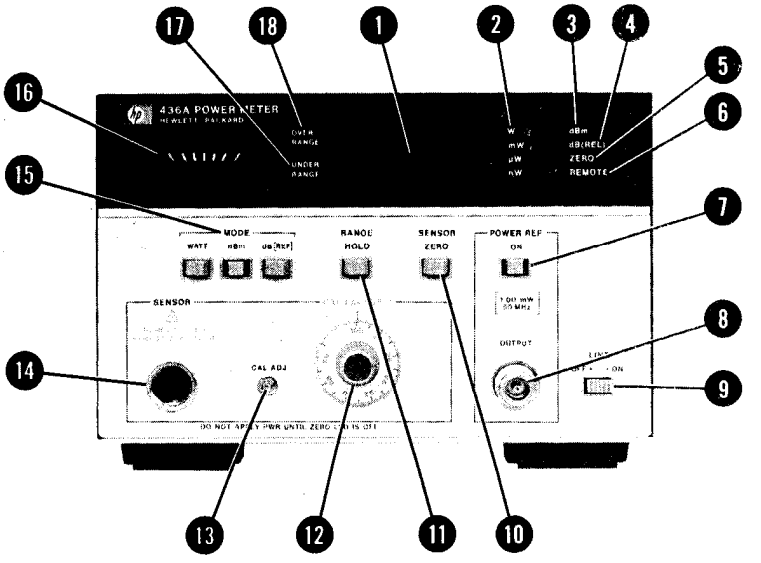

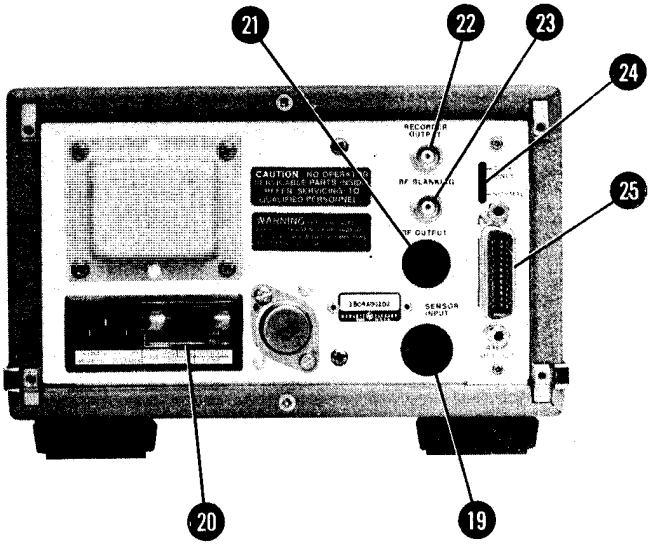

CAUTIONS

BEFORE CONNECTING LINE POWER TO THIS INSTRUMENT, ensure that all devices connected to this instrument are connected to the protective (earth) ground.

BEFORE SWITCHING ON THIS INSTRUMENT, ensure that the line power (mains) plug is connected to a three-conductor line power outlet that has a protective (earth) ground. (Grounding one conductor of a two-conductor outlet is not sufficient.)

Figure 3-3. Operating Instructions (3 of 4)

OPERATING INSTRUCTIONS

HP-IB OR BCD REMOTE OPERATION (cont'd)

1. BEFORE SWITCHING ON THIS INSTRUMENT, ensure that the power transformer primary is matched to the available line voltage, the correct fuse is installed, and safety precautions are taken. See Power Requirement, Line Voltage Selection, Power Cables, and associated warnings and cautions in Section II.
2. Connect the Power Sensor to the Power Meter with the Power Sensor Cable.
3. Connect the Power Meter to the Remote Interface (25).
4. Connect the Power Cable to the power outlet and (20) Line Power Module receptacles and set the (9) LINE ON-OFF switch to ON (in).
5. Set the Power Meter (12) CAL FACTOR % switch to 100 and the (7) POWER REF switch to off (out).
6. Set the remote enable input to the Power Meter to logical 1 (0.0 ± 0.4 Vdc) and program the Power Meter as follows:

Mode	WATT
Range	AUTO
(10) SENSOR ZERO	ON
(12) CAL FACTOR %	enabled

7. Wait for the (1) Digital Readout to stabilize, then verify that the (5) ZERO lamp is lit and that the (1) Digital Readout indicates 0.00 ± 0.02.

NOTE

When auto-zeroing the Power Sensor, no RF input power may be applied while the (5) ZERO lamp is lit. If any RF input power is applied, it will introduce an offset that will affect subsequent measurements.

8. Program the (10) SENSOR ZERO function to off and wait approximately 4 seconds for the (5) ZERO lamp to go out.
9. Connect the Power Sensor to the (8) POWER REF OUTPUT connector and set the (7) POWER REF switch to ON (in). Then adjust the (13) CAL ADJ control so that the (1) Digital Readout indicates 1.000 mW.
10. Set the (7) POWER REF switch to off (out) and disconnect the Power Sensor from the (8) POWER REF OUTPUT connector.
11. Locate the calibration curve on the Power Sensor to cover and determine the CAL FACTOR for the measurement frequency; set the Power Meter (12) CAL FACTOR % switch accordingly.

CAUTION

See Operating Precautions in the Power Sensor Operating and Service Manuals for maximum power levels which may be safely coupled to this system. Levels which exceed the limits may damage the Power Sensor, Power Meter or both.

12. Program the Power Meter to the desired Mode and Range, select the triggering most appropriate to the type of measurements anticipated, and connect the Power Sensor to the RF source.

Figure 3-3. Operating Instructions (4 of 4)

3-12. HEWLETT-PACKARD INTERFACE BUS REMOTE OPERATION

NOTE

For a quick and easy programming guide see Figure 3-8; for detailed information study paragraphs 3-12 through 3-61.

3-13. Hewlett-Packard Interface Bus (HP-IB) Option 022 adds remote programming and digital output capability to the Power Meter. For further information about the HP-IB, refer to IEEE Standard 488 and the Hewlett-Packard Catalog. Power Meter compatibility, programming, and data format is described in detail in the paragraphs which follow.

3-14. Compatibility

3-15. The Power Meter controls that can be programmed via the Hewlett-Packard Interface Bus are the MODE and SENSOR ZERO switches. The controls not programmable are the POWER REF and LINE switches. The CAL FACTOR % switch can be enabled and disabled via the interface bus but, when enabled, the calibration factor entered at the front-panel of the Power Meter is used.

3-16. In addition, specific ranges can be set and various triggering options are available to the programmer. This will be described in detail later.

3-17. The programming capability of the Power Meter will be described in terms of the twelve bus messages found in Table 3-1.

3-18. Data Messages

3-19. The Power Meter communicates on the bus primarily through data messages. It receives data messages that tell it what range to use, what mode to use, whether or not cal factor should be enabled, and what the measurement rate should be. It sends data messages that tell the measurement value, the mode and range the value was taken at, and what the instrument's status (see Table 3-4) was when it took the measurement.

3-20. Table 3-2 outlines the key elements involved in making a measurement. Indeed the Power Meter can be programmed to make measurements via the HP-IB by following only the sequence suggested in the table, and briefly referring to Tables 3-3, 3-4, (input and output data), and Fig. 3-8. However, to take advantage of the programming flexibility built into the Power Meter and minimize the time it takes to make a valid measurement, study the rest of the information in this section.

3-21. Receiving Data Messages

3-22. The Power Meter is configured to listen (receive data) when the controller places the interface bus in the command mode (ATN and REN lines low; IFC line high) and outputs listen address "-" (minus sign). The Power Meter then remains configured to listen (accept programming inputs when the interface bus is in the data mode) until it is unaddressed by the controller. To unaddress the Power Meter, the controller can either send the Abort Message (set tine IFC line low) or send the Local Message (set the REN line high), or it can place the interface bus in the command mode and generate a universal unlisten command.

3-23. Data Input Format. The Power Meter does not require any particular data input format. It is capable of responding to each of the programming codes listed in Table 3-3 on an individual basis. Because it responds to these codes in the order it receives them, we recommend that the code for measurement rate be sent last.

3-24. Program Codes. Table 3-3 lists the program codes that the Power Meter responds to and the functions that they enable. In the listen mode, the Power Meter can handshake in 0.5 μs. The time required for the Power Meter to respond to the programming command, however, depends on where the Power Meter is in the operating program (see Figure 3-6). The overall worst case time for Power Meter response to a programming command is 2.5 seconds, the minimum response time is approximately 100 microseconds.

NOTE

In addition to the program codes listed in Table 3-3, Power Meter operation will be affected by all other program codes shown in columns 2, 3, 4, and 5 of Table 2-2, except (SP!"#$%&). Thus care should be taken to address the Power Meter to unlisten before sending these programming commands to other instruments on the interface bus.*

3-25. Programming the Range. Remote range programming is slightly different than Local range selection. For Local operation the Power Meter auto-ranges. For Remote operation, the program codes have provision for direct selection of the de-

Table 3-1. Message Reference Table

Message and Identification	Applicable	Command and Title	Response
Data	Yes	T3 Talker, L2 Listener, AH1 Acceptor Handshake SH1 Source Handshake.	Power Meter changes mode, range, measurement rate, and Cal Factor enable or disable. It outputs status and measurement data.
Trigger (DTO)	No	Device Trigger	The Power Meter does not respond to a Group Execute Trigger. However, remote trigger capability is part of the Data message (measurement rate).
Clear (DC2)	Yes No	DCL Device Clear SDC Selected Device Clear	Upon receipt of DCL command, Power Meter functions are set for Watt Mode, Auto Range, Cal Factor Disable and Measurement rate Hold.
Remote (RL2)	Yes	REN Remote Enable	Power Meter goes to remote when addressed to listen, and REN is true (low).
Local (RL2)	Yes No	REN Remote Disable GTL Go to Local	Power Meter goes to local when REN is false (high). Power Meter does not respond to GTL command.
Local Lockout (RL2)	No	REN Remote Disable	Power Meter does not respond to LLO command.
Clear Lockout/ Set Local (RL2)	Yes	REN Remote Disable	Returns all devices on bus to local operation.
Pass Control/Take Control (C0)	No	Controller	Power Meter cannot act as bus controller.
Require Service (SR0)	No	SRQ Service Request	Power Meter does not request service.
Status Byte	No	SPE Serial Poll Enable SPD Serial Poll Disable	Power Meter does not respond to a Serial Poll
Status Bit (PP0)	No	PP Parallel Poll	Power Meter does not respond to a parallel poll.
Abort	Yes	IFC Interface Clear	Power Meter stops talking or listening.

NOTE

Complete HP-IB capability as defined in IEEE Std. 488 is AH1, CO, DC2, DTO, LEO, PPO, RL2, SH1, SR0, T3, TEO.

Table 3-2. Measurement Sequence

MEASUREMENT SEQUENCE

Event 1 {controller talk and Power Meter listen}, {Program Codes}

- {controller talk and Power Meter listen}: See controller manual. Power Meter Listen address factory set to "-" (see Tables 2-1 and 2-2).
  e.g., CMD "?U-","9D+V"
  wrt "pmrd", "9D+V"
- {Program Codes}: Program codes to configure one or more of the following (see Table 3-3):
  1. Range
  2. Remote mode (Watt, dBm, dB [Ref]
  3. Cal Factor
  4. Measurement Rate (and trigger)

Event 2 Response time for meter's digital (operating program) circuitry (see Table 3-5 and Figures 3-5 and 3-6).

Event 3 Meter takes measurement; data available.

Event 4 Additional delay to allow analog circuits to settle; necessary only if on Range 1 (most sensitive) or if settling time measurement rates are not being used (see Figure 3-4). Here are some suggestions: *

1. Load reading into controller (event five) and check data string for range (look at character number 1 or check measured value).
2. If Power Meter is on Range 1, wait 10 seconds and take another reading.
3. If settling time measurement rates are being used and meter is *not* on Range 1, use the first reading.
4. If settling time measurement rates are not being used, determine the range and branch to an appropriate delay: Range 2, one second; Ranges 3-5, 0.1 second.

Event 5 {universal unlisten, controller listen and Power Meter talk} , {variable name}

- See controller manual. Power Meter Talk address factory set to "M" (see Tables 2-1 and 2-2).

*There are other ways to ensure that readings are not affected by analog circuit settling time. Also, these recommended delays are worst case. A thorough understanding of the material in this section will allow you to optimize measurement time for your particular application. For example, if the power level is not changing, the controller can average at least two consecutive readings to see if the result is still settling.

EXAMPLE PROGRAM SEQUENCE:

Line 1 {controller talk and power meter listen}, "9D+T"

- "9D+T":
  - Measurement Rate: Trigger with settling time.
  - Cal Factor Disable (100%)
  - dBm Mode
  - Auto Range

Line 2 {universal unlisten, controller listen and power meter talk} , {variable name}

- Power meter outputs measured value to controller.

Line 3 { Controller checks value in variable for Range 2 threshold (e.g., <-20 dBm for Model 8482A Power Sensor). If value is below threshold, program branches to line 4. If value is above threshold, program branches to line 5. }

Line 4 {wait 10 seconds, then go to line 1} .

Line 5 {continue}.

Table 3-3. Hewlett-Packard Interface Bus Input Program Codes

Function	Program Codes	
	ASC II	DECIMAL
Range		
Least sensitive	5	53
	4	52
	3	51
	2	50
Most sensitive	1	49
Auto	9	57
MODE		
Watt	A	65
dB (Rel)	B	66
dB [Ref]	C	67
dBm	D	68
Sensor auto-zero	Z	69
CAL FACTOR		
Disable (100%)	+	43
Enable (front-panel switch setting)	–	45
Measurement Rate		
Hold	H	72
Trigger with setling time	T	84
Trigger, immediate	I	73
Free Run at maximum rate	R	82
Free Run with setling time	V	86

sired range as well as for selection of the autorange function.

3-26. Programming the Mode. Remote mode programming is similar to Local mode selection. The sequence shown in Example 1 is recommended for taking dB (Rel) readings from a dB [Ref] reference.

3-27. Programming Auto-Zero. The Power Meter is remotely zeroed the same way it is zeroed in local. Example 2 ahown on the next page outlines the program steps that should be written. Specific examples are provided later in this Section. (Refer to Tables 3-3 and 3-4 for Power Meter input and output strings. Refer to controller manual for programming syntax.)

3-28. Programming Cal Factor. While the setting of the front panel CAL FACTOR switch cannot be remotely changed, the programmer does have a choice. If CAL FACTOR enable is programmed, then the Power Meter uses the Cal Factor set by the switch. If CAL FACTOR Disable is programmed, then the Power Meter uses a Cal Factor of 100%, but the program can correct for cal factor by computing the corrected reading from the actual reading and the cal factor (a Cal Factor table must be stored in an array).

3-29. Programming Measurement Rate. A feature that is only available via remote programming is selection of standby, triggered, or free running operation of the Power Meter. (During Local operation, the Power Meter is allowed to free run with approximately 133 milliseconds allowed for settling time between measurements.) The specific remote triggering capabilities are:

a. Hold (H) - when the power meter is programmed to Hold, it is inhibited from taking measurements and from outputting data. Thus, it is set to a predetermined reference condition from which a measurement can be triggered synchronously to some external event.

b. Trigger Immediate (I) - this programming command directs the Power Meter to make one measurement and output the data in the minimum possible time, then to go into Hold until the next triggering command is received. It does not allow settling time prior to the measurement.

c. Trigger with Delay (T) - this trigger command is identical to the trigger immediate command except that it causes the Power Meter to execute a settling-time delay subroutine before taking a measurement and outputting data.

EXAMPLE 1 (dB Rel/dB Ref)

1 {controller talk and Power Meter listen}, **"CT"**	Sets reference at present RF input level.
2 {controller talk and Power Meter listen}, **"BT"**	Takes first reading relative to set reference
3 {universal unlisten, controller listen and Power Meter talk}, {Variable name}	Power Meter outputs reading to controller
4 {controller talk and Power Meter listen} , **"T"**	Takes subsequent readings
5 {universal unlisten, controller listen and Power Meter talk}, {Variable name}	Power Meter outputs reading to controller

Receiving Data Messages (cont'd)

d. Free run at maximum rate (R) - this programming command is normally used for asynchronous operation of the Power Meter. It directs the Power Meter to continuously take measurements and output data in the minimum possible time. It does not allow settling time prior to each measurement.

e. Free run with delay (V) - this programming command is identical to the previous command except that it causes the Power Meter to execute a settling-time delay subroutine prior to each measurement.

3-30. When programming the Power Meter for synchronous triggered operation, there are two factors that the programmer must consider to ensure the validity of the output measurement data. The first factor is the time that it takes the Power Meter to respond to a full scale change in input power level. A typical Power Meter response curve is shown in Figure 3-4. By comparing this curve with the measurement timing cycle shown in Figure 3-5 and summarized in Table 3-5, the validity of the Power Meter output can be tabulated according to operating range and triggering interval versus change in input power level. A general summary of this information is as follows:

a. When the Power Meter is programmed for trigger with settling time operation, sufficient time is provided for the Power Meter to settle to the input power level on all ranges except Range 1 (most sensitive range). On Range 1 approximately 10 seconds (9-10 measurements) are required for the Power Meter to settle to the input power level.

b. When the Power Meter is programmed for trigger immediate operation, the desired amount of settling time can be incorporated into the program.

3-31. Programming the Local to Remote Mode Change. The second factor that must be considered when programming the Power Meter for synchronous triggered operation is whether the first trigger is sent immediately after terminating local operation. As illustrated in Figure 3-6, the Power Meter will not respond to the first trigger following a local to remote transition until it completes the previously initiated measurement and display cycle. Thus, the first data output of the Power Meter may not be valid. The options available to the programmer are:

1. Send a trigger command (Data Message) and discount the first data output. Upon outputting the data, the Power Meter will go to Hold and operate synchronously starting with the next trigger command.

2. Wait approximately 2.5 seconds after placing the Power Meter in remote and sending the first program trigger command (Data Message).

3. Send a Clear Message (DCL) immediately after placing the Power Meter in remote. This will restart the Power Meter operating program.

3-32. Sending Data Messages from the Power Meter

3-33. The (24) TALK ONLY/NORMAL switch (see Figure 3-3) enables the Power Meter to func-

EXAMPLE 2 (Auto Zero)

1	Remove RF power from power sensor (or set it at least 20 dB below the lowest range of the sensor).	
2	{controller talk and Power Meter listen}, "Z1T"	Send zero trigger program codes.
3	{universal unlisten, controller listen and Power Meter talk} , {variable name}	Read measured value data from meter (characters 4, 5, 6, and 7).
4	If absolute value of measured data is not <2 (0000 ± 0002) then branch to step 2; if it is, then continue. (Although this step averages three seconds, it may take as long as 10 seconds to execute.)	
5	{controller talk and Power Meter listen}, "9+Dl"	Send normal measurement mode program codes.
6	{universal unlisten, controller listen and Power Meter talk} , {variabie name}	Read status character (number 0) from meter's output data string.
7	Check status character for an auto zero loop enabled condition (character 0 ⩾ decimal 84). If loop is enabled then branch to step 5. If not, then continue. (This step takes approximately four seconds to execute.)	

Sending Data Messages (cont'd)

tion as a basic talker or in the talk only mode. If the basic talker function is selected, the Power Meter is configured to talk when the controller places the interface bus in the command mode and outputs talk address M. The Power Meter then remains configured to talk (output data when the interface bus is in the data mode), until it is unaddressed to talk by the controller. To unaddress the Power Meter, the controller can either send an Abort Message (generate an interface clear), or it can place the interface bus in the command mode and output a new talk address or a universal untalk command. Examples of addressing and unaddressing the Power Meter to talk are provided in Table 3-2 and Figure 3-8.

3-34. Talk Only Mode. When the Power Meter functions in the Talk Only Mode, it is automatically configured to TALK when the interface bus is in the Data Mode and there is at least one listener. Since there can only be one talker at a time per interface bus, this function is normally selected only when there is no controller connected to the system (e.g., when the Power Meter is interconnected to an HP 5150A recorder).

3-35. Output Data Format. The output data format of the Power Meter is shown and described in Table 3-4.

3-36. The output data is a fourteen character string that is provided once at the end of each measurement cycle. It is a good idea to read at least part of this string into the controller after each measurement cycle, even if it will not be used. This will avoid the possibility of incorrect data being read after some future measurement.

3-37. The string begins with a status character and ends with a carriage return and a line feed. Measured value is formatted as a real constant: plus or minus four digits (leading zeros not suppressed) followed by an exponential multiplier. The decimal point is not provided because it is understood that it follows the four "measured value" digits. The two-digit exponent is always negative.

3-38. Data Output Time. Figure 3-6 provides a simplified flow chart of Power Meter operation. As shown in the figure, the Power Meter operates according to a stored program and can only output

Table 3-4. Hewlett-Packard Interface Bus Output Data String

	Definition		Character ASC II	Character Decimal
STATUS	Measured value valid		P	80
	Watts Mode under Range		Q	81
	Over Range		R	82
	Under Range dBm or dB [REL] Mode		S	83
	Power Sensor Auto Zero Loop Enabled; Range 1 Under Range (normal for auto zeroing on Range 1)		T	84
	Power Sensor Auto Zero Loop Enabled; Not Range 1, Under Range (normal for auto zeroing on Range 2-5)		U	85
	Power Sensor Auto Zero Loop Enabled; Over Range (error condition - RF power applied to Power Sensor; should not be)		V	86
RANGE	Most Sensitive	1	I	73
		2	J	74
		3	K	75
		4	L	76
	Least Sensitive	5	M	77
MODE	Watt		A	65
	dB REL		B	66
	dB REF (switch pressed)		C	67
	dBm		D	68
SIGN	space (+)		SP	32
	- (minus)		-	45
DIGIT	0		0	48
	1		1	49
	2		2	50
	3		3	51
	4		4	42
	5		5	53
	6		6	54
	7		7	55
	8		8	56
	9		9	57

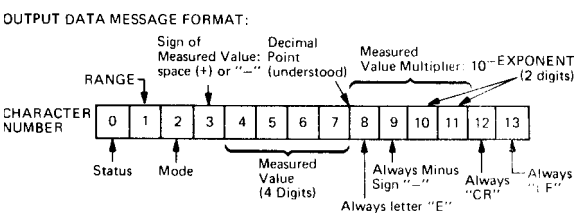

Table 3-5. Power Meter Remote Access Time to First Output Data Character

Measurement Triggering	Mode	Worst Case Access Time to First Output Character		
		Range 1 or 2	Range 3,4 or 5	Auto Range
Free Run at maximum rate, Trigger immediately	WATT dBm dB (REL) db [REF]	70 ms 90 ms 160 ms 160 ms	70 ms 90 ms 160 ms 160 ms	Compute measurement times from Figure 3-5 and add measurement time of each range that Power Meter steps through to delay time listed below. From To Delay: 1 2 1070 ms; 2 1 1070 ms; 2 3 133 ms From To Delay: 3 2 1070 ms; 4 3,5 133 ms; 5 4 133 ms Examples: Starting at block labeled "HOLD" in Figure 3-5, worst case access time for range 1-3, and range 3-1 changes with WATT MODE selected are: Range 1 70 ms; 1-2 Delay 1070 ms; Range 2 53 ms; 2-3 Delay 133 ms; Range 3 53 ms; 1379 ms Range 3 50 ms (33+17); 3-2 Delay 1070 ms; Range 2 33 ms; 2-1 Delay 1070 ms; Range 1 33 ms; 2256 ms
Free Run with settling time or Trigger with settling time.	WATT dBm dB (REL) db [REF]	1130 ms 1130 ms 1200 ms 160 ms	190 ms 190 ms 260 ms 160 ms	Compute worst case Auto Range access times from Figure 3-5. Examples: Starting at block labeled "HOLD" in Figure 3-5; worst case access times for range 1-3 and range 3-1 with WATT MODE selected are: 1-3 (1070 + 53, + 1070 + 53 + 133 + 53) = 2432 ms 3-1 (133 + 33 + 1070 + 33 + 1070 + 33) = 2372 ms.

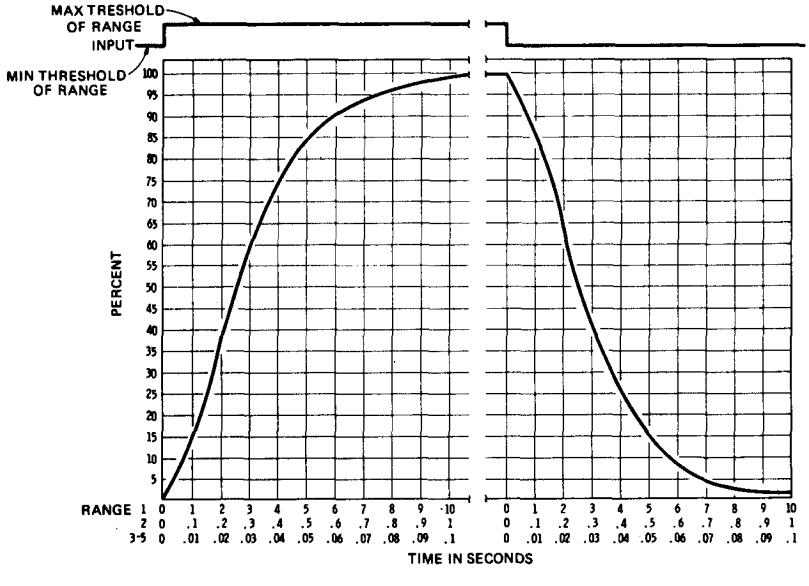

Figure 3-4. Power Meter Response Curve (Settling Time for Analog Circuits)

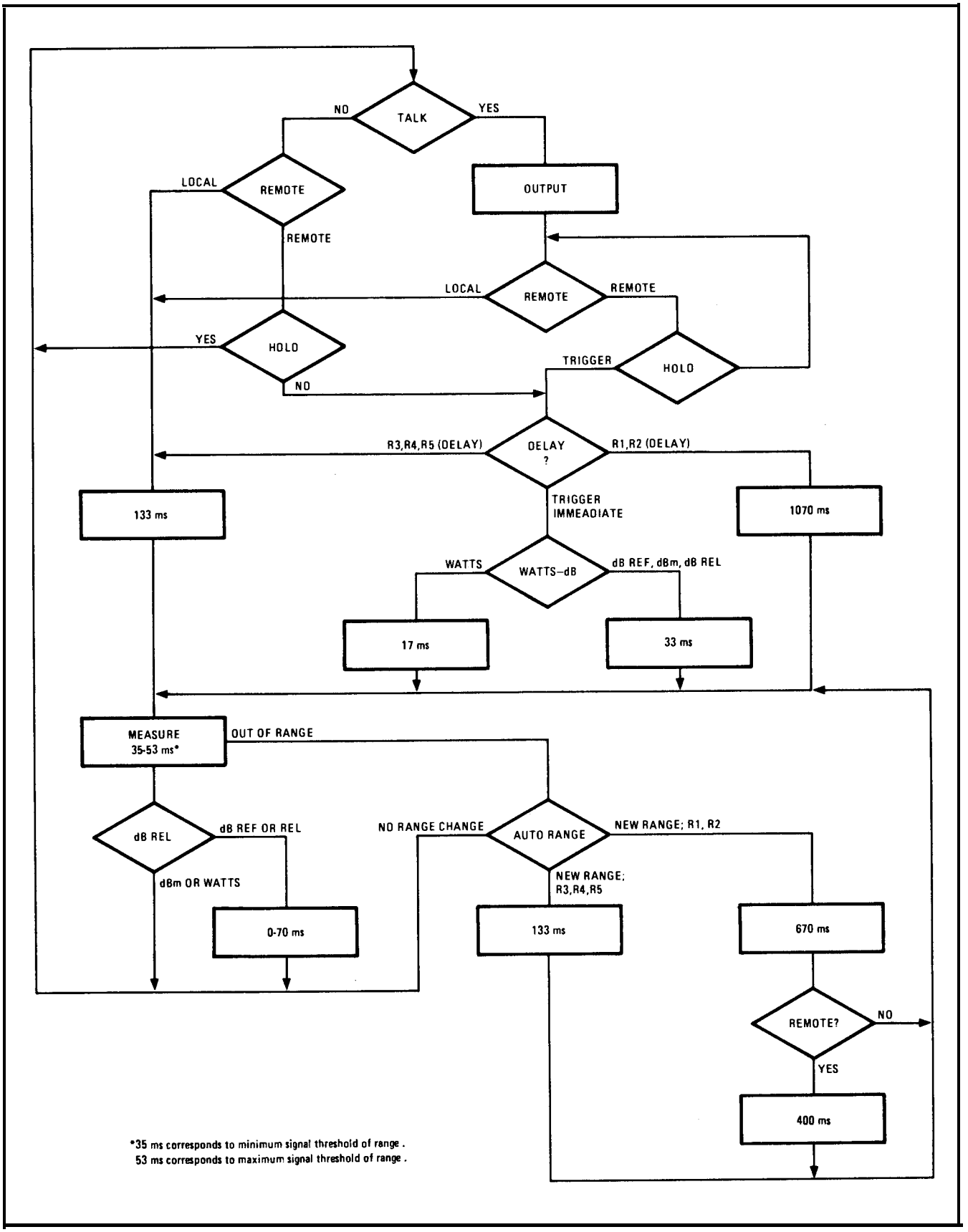

Figure 3-5. Measurement Timing Flow Chart (Settling Time for Digital Circuitry)

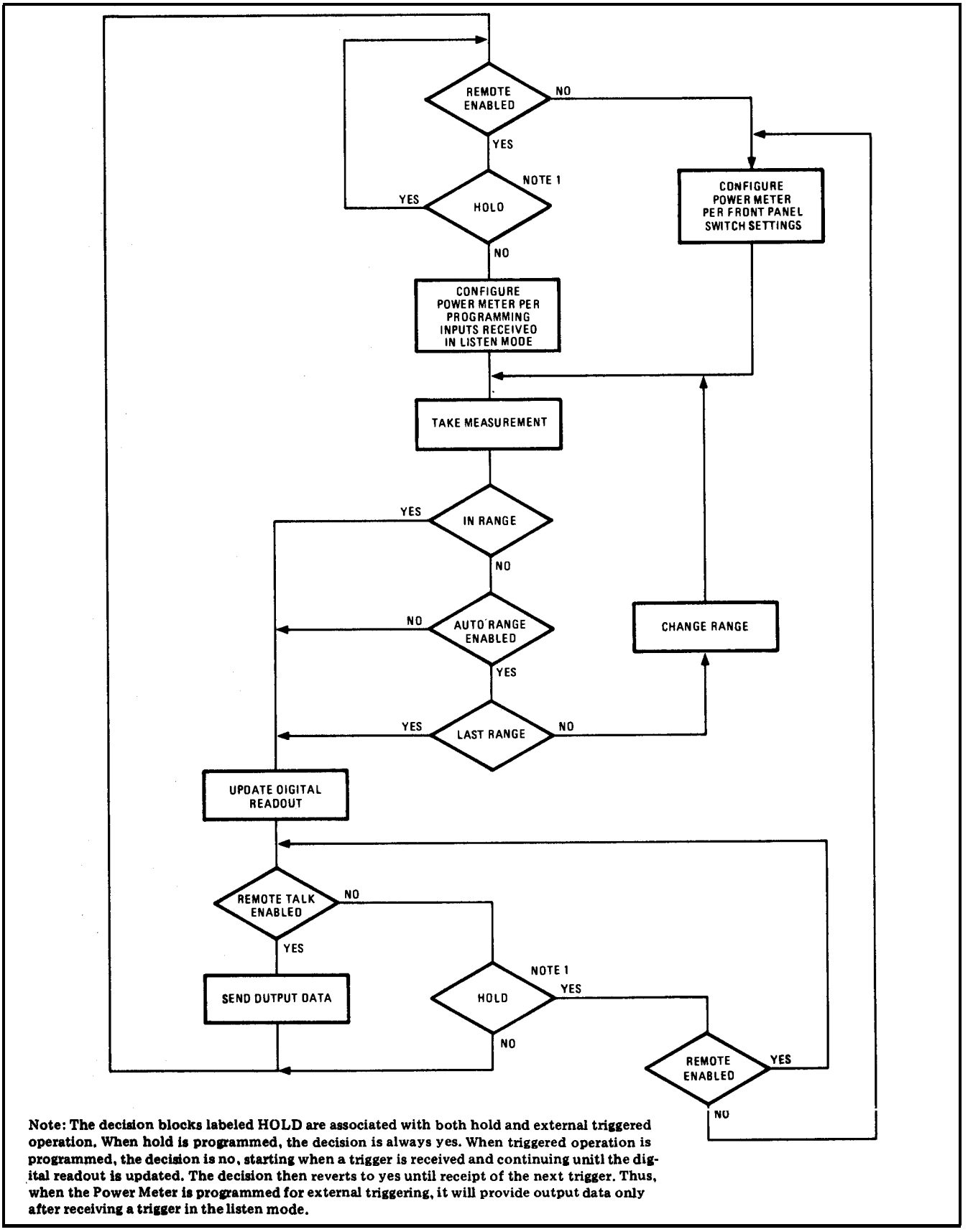

Note: The decision blocks labeled HOLD are associated with both hold and external triggered operation. When hold is programmed, the decision is always yes. When triggered operation is programmed, the decision is no, starting when a trigger is received and continuing until the digital readout is updated. The decision then reverts to yes until receipt of the next trigger. Thus, when the Power Meter is programmed for external triggering, it will provide output data only after receiving a trigger in the listen mode.

Figure 3-6. Operating Program Simplified Flow Chart

Sending Data Messages (cont'd)

data after taking a measurement. Thus, when the interface bus is placed in the data mode after the Power Meter has been addressed to talk, the time required to access the first output data character depends on where the Power Meter is in the operating program, and on how the Power Meter has been previously programmed (see Programming Codes above.) Worst case access times for each of the Power Meter operating configurations are listed in Table 3-5.

3-39. After the first output character is sent, the remaining characters are sent at either a 10-kHz rate (infinitely fast listener) or at the receive rate of the slowest listener.

3-40. Receiving the Trigger Message

3-41. The Power Meter has no provision for responding to a Trigger Message (bus command GET). Power Meter triggering is done with the Data Message (through the Measurement Rate Program Codes).

3-42. Receiving the Clear Message

3-43. The Power Meter has provision for responding to the DCL bus command but not the SDC bus command. Upon receipt of the DCL command, the Power Meter operating program is reset causing the Power Meter to enter the Hold state shown at the top of Figure 3-6, and the HP-IB circuits are configured to provide Watt Mode, Auto Range, and Cal Factor Disable outputs.

3-44. Receiving the Remote Message

3-45. When the Power Meter recieves the Remote Message (REN line low) it completes the rest of its current measurement cycle (see Figure 3-6) and then goes to remote. See the Local to Remote Mode Change (paragraph 3-31) for information about how to program the local to remote mode change.

3-46. Receiving the Local Message

3-47. The Power Meter does not respond to the GTL (go to local) bus command. It reverts to local operation when the REN (remote enable) bus line goes false (high).

3-48. Receiving the Local Lockout and Clear Lockout Set Local Messages

3-49. The Power Meter does not respond to the Local Lockout Message (LLO bus command). It responds to the Clear Lockout/Set Local Message in that when the REN bus line goes false, it will revert to local operation.

3-50. Receiving the Pass Control Message

3-51. The Power Meter has no provision for operation as a controller.

3-52. Sending the Required Service Message

3-53. The Power Meter does not have provision for requesting service.

3-54. Sending the Status Byte Message

3-55. The Power Meter does not respond to a Serial Poll.

3-56. Sending the Status Bit Message

3-57. The Power Meter does not respond to a Parallel Poll.

3-58. Receiving the Abort Message

3-59. When the Power Meter receives an Interface Clear command (IFC), it stops talking or listening.

3-60. Test of HP-IB Operation

3-61. Figure 3-7 outlines a quick check of the 436A remote functions. This gives the user two alternatives for testing the power meter: 1, write a program corresponding to Figure 3-7 for a quick check or 2, use the program in Section VIII for complete testing and troubleshooting.

3-62. REMOTE BCD INTERFACE OPERATION

3-63. BCD Option 024 adds remote programming and digital output capability to the Power Meter. There are two basic methods for operating the Power Meter with this option. It can be operated locally with an external instrument used to record output data, or it can be operated remotely by sending remote programming inputs to the Power Meter.

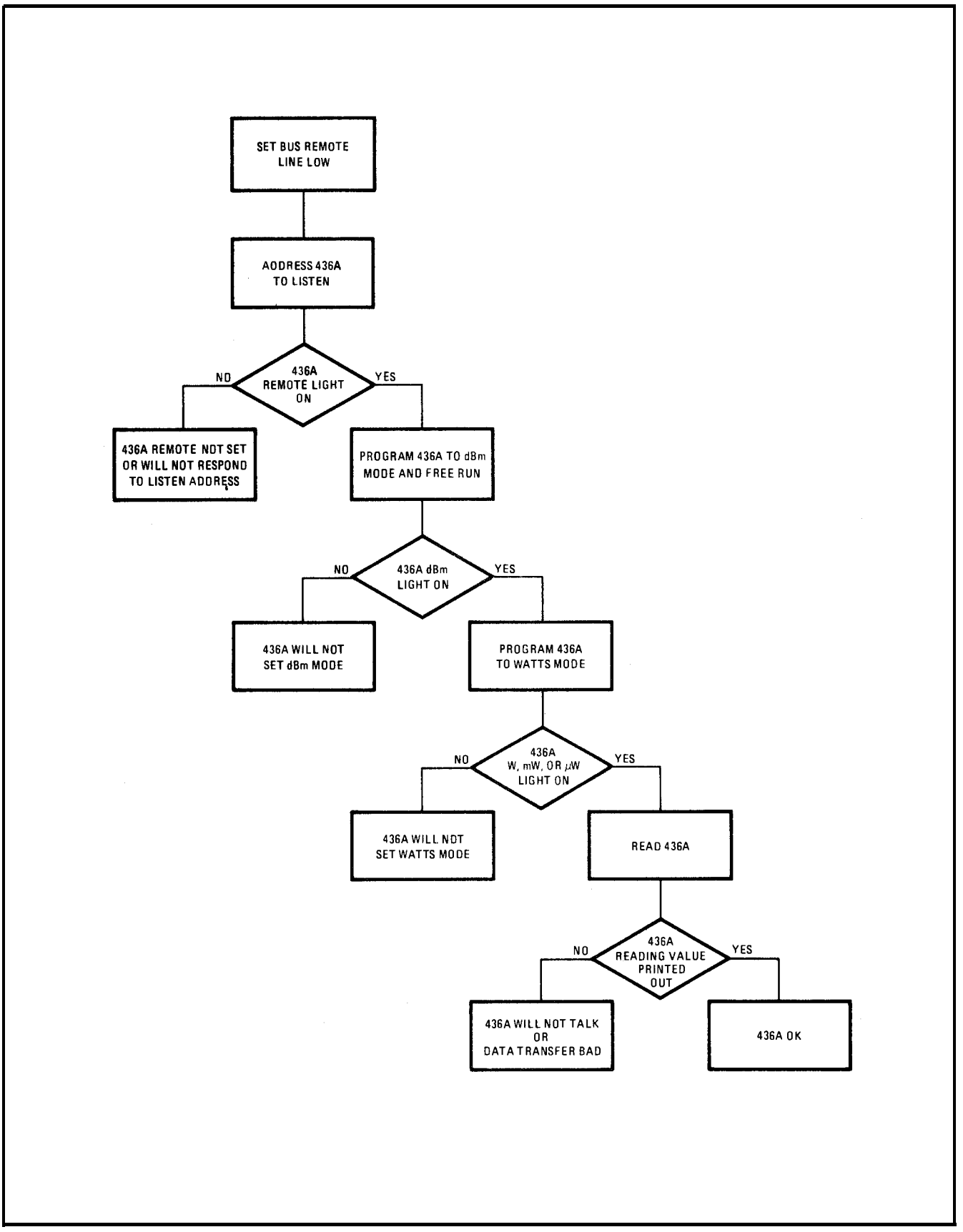

Figure 3-7. Test of HP-IB Operation Flowchart

436A QUICK PROGRAMMING GUIDE

This guide will help set up and program simple HP-IB instrumentation systems, thereby freeing you from making an in-depth study of system design and BASIC or HPL programming languages.

I. THE SYSTEM:

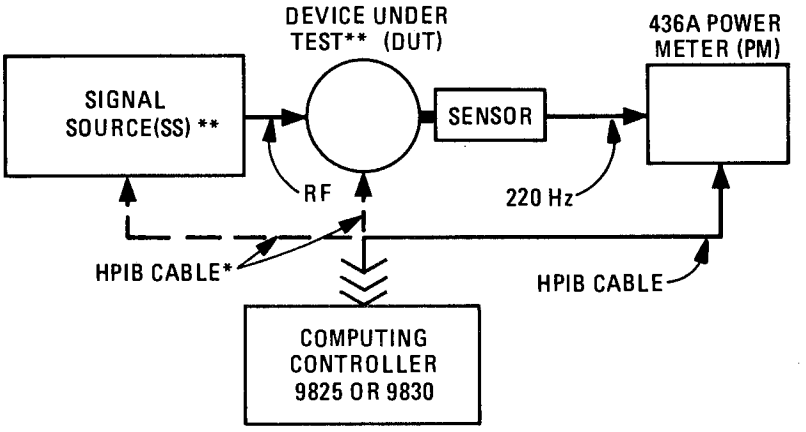

*** HP-IB cables shown with dotted lines are used only if the Source and Device under test are programmable.**

**** Signal Source and Device under Test may be the same, e.g., checking Sig. Gen. Flatness.**

II. THE PROGRAM: If the power meter is the only part of the system to be programmed, use the program statements in the order given. For more complex systems or programs, include statements derived from the information in the optional (dashed line) flow chart boxes. When it is necessary to write more statements, refer to Table 3-2.

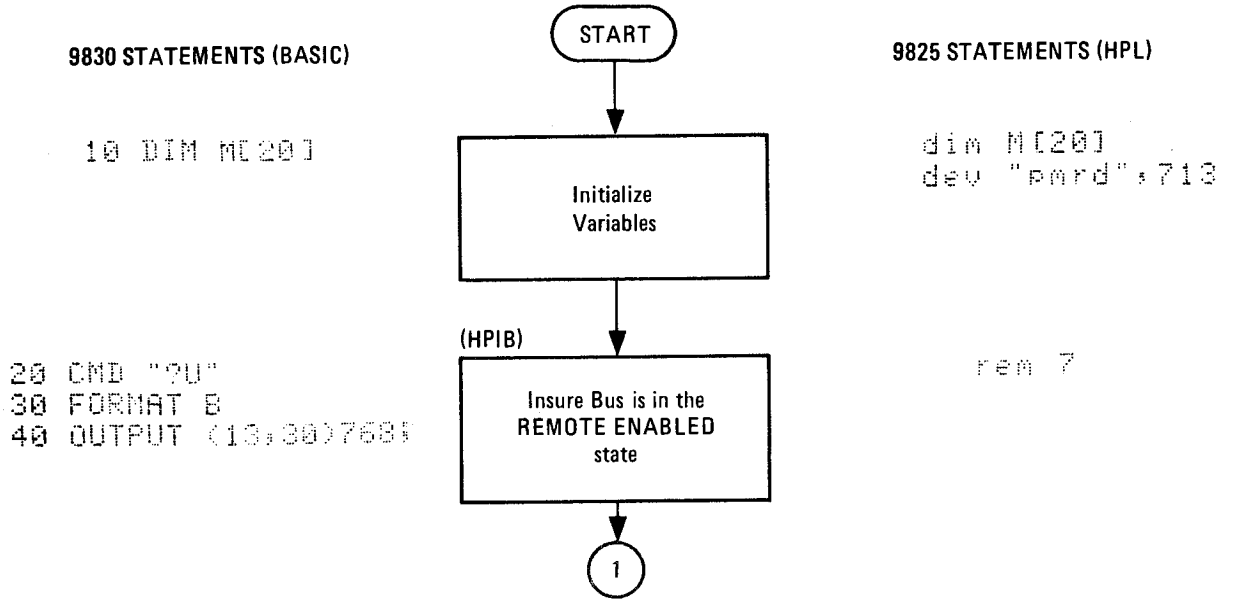

Figure 3-8. 436A Quick Programming Guide (1 of 5)

436A QUICK PROGRAMMING GUIDE (Cont'd)

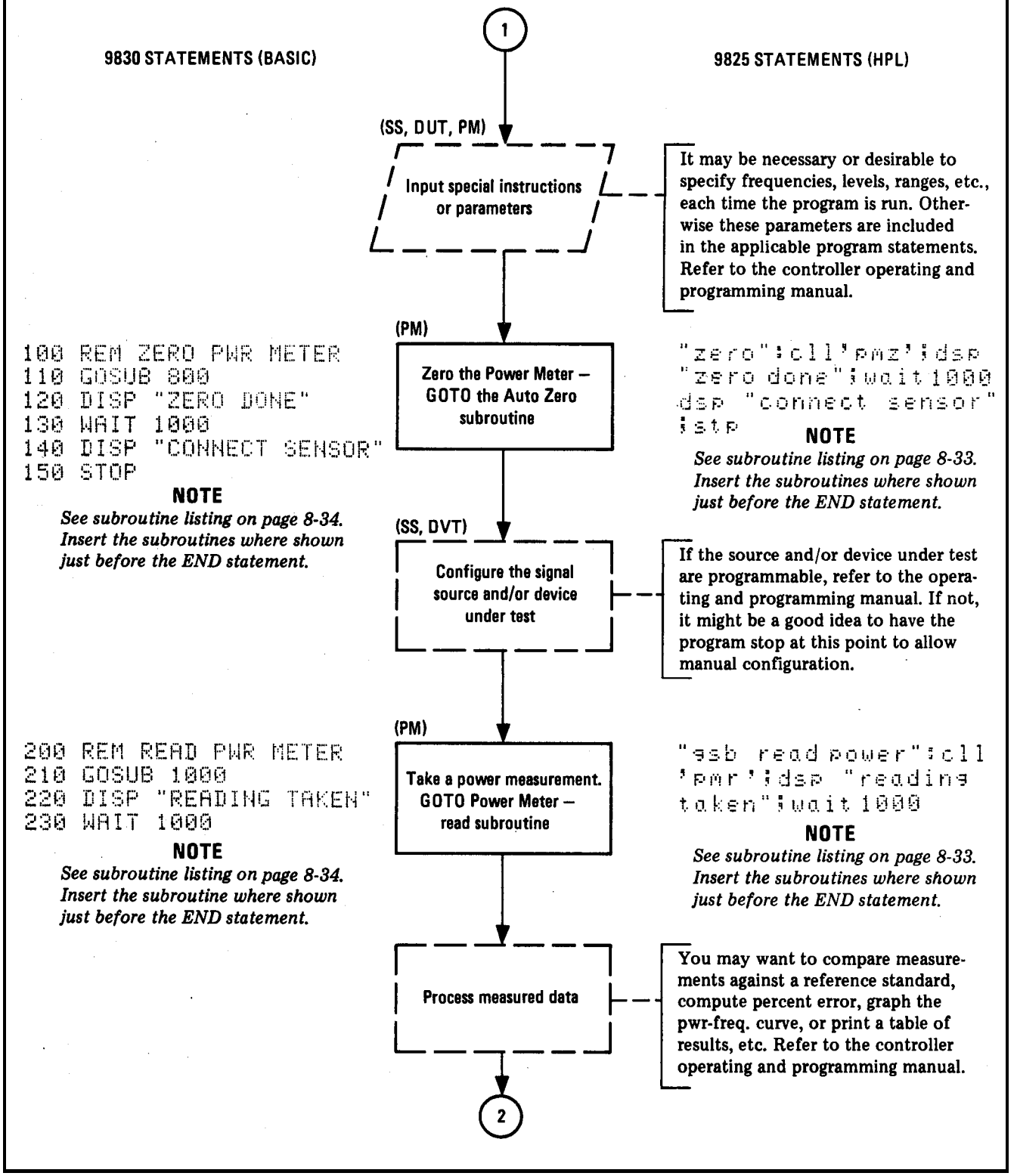

Figure 3-8. 436A Quick Programming Guide (2 of 5)

436A QUICK PROGRAMMING GUIDE (cont'd)

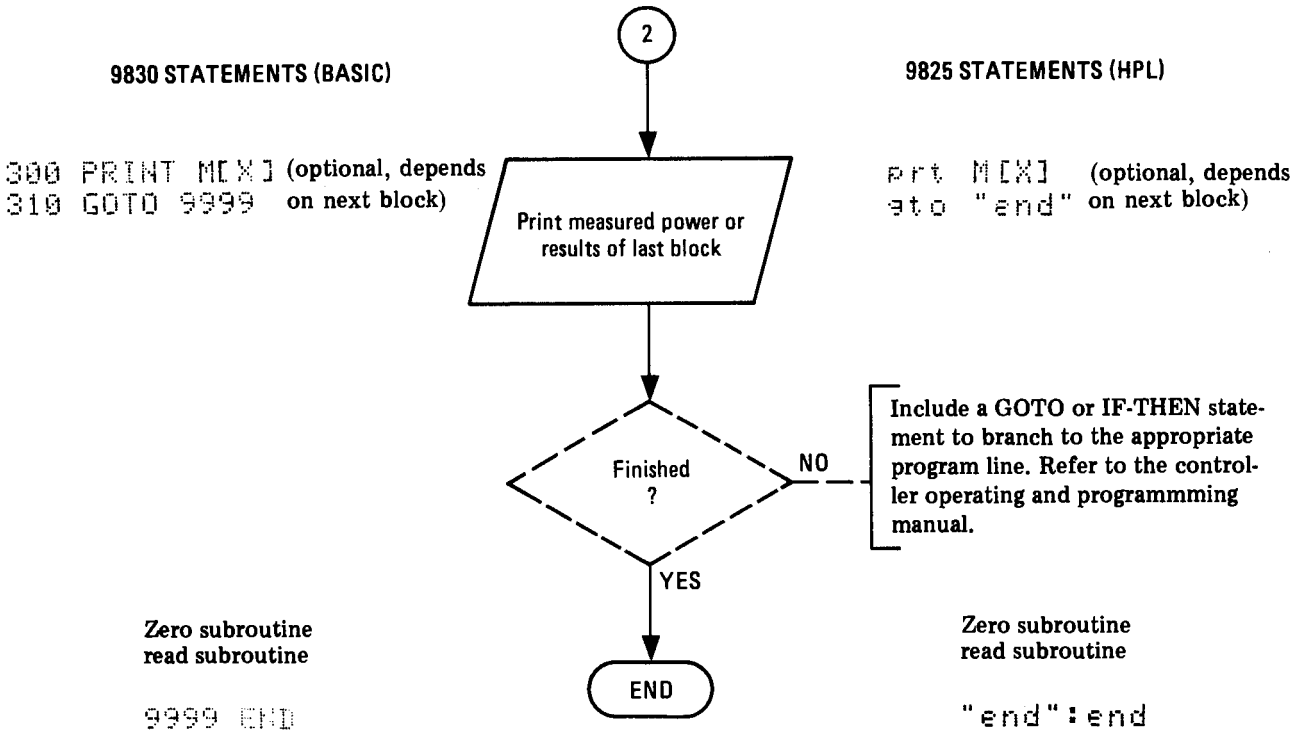

NOTE:

When running the program press CONT–EXECUTE to restart program execution after a STOP (stp) statement.

Figure 3-8. 436A Quick Programming Guide (3 of 5)

436A QUICK PROGRAMMING GUIDE (cont'd)

Subroutines for 9825 (HPL)

"pmz" - Power meter zero subroutine

```
"pmz":
"remove source":dsp "disconnect sensor from source";stp
wrt "pmrd", "Z1T"; fmt 2,3x,f5.0;red "pmrd.2",Z
"verify zero" :if abs(Z)>2;gto "remove source"
"unzero":wrt "pmrd", "9+AI";fmt 3,b;red "pmrd.3",Z
"verify unzero": if Z>34;gto "unzero"
"preset/ret":wrt "pmrd","9D+V";ret
```

"pmr" - Power meter read subroutine

```
"pmr":
fmt 1,1x,b,1x,f5.0,1x,f3.0
0→R
for X=1 to 20
wrt "pmrd", "9D+V"
wait (R=73) 4000
red "pmrd.1'',R,P,E
if X=1;g to "P1"
if abs(P-S)>l;gto "P1"
P10^E→P;ret
"P1":P→S
next X
dsp "power meter not settled"
```

Note: *The next statement should be* `"end" :end,` *or if another subroutine follows then a* `gto "end"` *should be used.*

Figure 3-8. 436A Quick Programming Guide (4 of 5)

436A QUICK PROGRAMMING GUIDE (cont'd)

Subroutines for 9830 (BASIC)

POWER METER ZERO SUBROUTINE

```
800 REM POWER METER ZERO SUBROUTINE
805 DISP "DISCONNECT SENSOR FROM SOURCE"
806 STOP
810 REM ZERO POWER METER
820 CMD "?U-","Z1T"
830 FORMAT 3X,F5.0
840 CMD "?M5"
850 ENTER (13,830)Z
860 REM TEST FOR ZERO
870 IF ABS(Z)>2 THEN 810
880 REM UNZERO POWER METER
890 CMD "?U-","9+A1"
900 FORMAT B
910 CMD "?M5"
920 ENTER (13,900)Z
930 REM TEST FOR UNZERO
940 IF Z >= 84 THEN 890
950 REM PRESET POWER METER
960 CMD "?U-","9D+V"
970 RETURN
```

POWER METER READ SUBROUTINE

```
1000 REM POWER METER READ SUBROUTINE
1010 FORMAT X,B,X,F5.0,X,F3.0
1020 R=0
1030 FOR X=1 TO 20
1040 CMD "?U-","9D+V"
1050 WAIT (R=73)*4000
1060 CMD "?M5"
1070 ENTER (13,1010)R,P,E
1080 IF X=1 THEN 1120
1090 IF ABS(P-P1)>1 THEN 1120
1100 P=P*10↑(E)
1110 RETURN
1120 P1=P
1130 NEXT X
1140 DISP "POWER METER NOT SETTLED"
```

Note: *The next statement should be* END , *or if another subroutine follows then a* GOTO 9999 *should be used.*

Figure 3-8. 436A Quick Programming Guide (5 of 5)

REMOTE BCD INTERFACE OPERATION (cont'd)

3-64. Figure 3-3 provides instructions for operating the Power Meter with the BCD option installed. In order to follow these instructions, the operator must be familiar with Power Meter programming and output data format. This information is provided in detail in the paragraphs which follow.

NOTE

The Power Meter BCD option is designed to interface directly with an HP 5055A Digital Recorder. When it is used with this recorder, it can only be operated in the Local mode (unless a special cable is fabricated), as the BCD interface bus lines that are normally used to program the Power Meter, are used instead to preset the digital recorder print format. In the paragraphs which follow, differences in Power Meter output data format for digital recorder and "universal" interfacing are noted as applicable.

3-65. Output Data Format

3-66. When the Power Meter is interfaced with an HP 5055A Digital Recorder, the output data printout is as described in Table 3-4. When the Power Meter is interfaced with other controller or recorder instruments, data format is selected by the user. Refer to Table 3-5 for a description of the function and coding of the Power Meter output data lines.

3-67. BCD Remote Programming

3-68. Remote programming of the Power Meter is enabled when a 0.0 to +0.4 Vdc level is applied to remote enable input line J7-21. The Power Meter controls that can be programmed remotely are the MODE and SENSOR ZERO switches. The controls not programmable are the POWER REF and LINE switches. The CAL FACTOR % switch can be enabled and disabled via the remote interface but, when enabled, the calibration factor entered at the front panel of the Power Meter is used.

NOTE

Jumper options are provided to enable remote programming of the SENSOR ZERO switch when the remote enable input is high (+2.5 to +5.0V level is applied to J7-21). See Section II, Installation.

3-69. Remote range programming is slightly different than Local Range selection. For Local operation, a particular range is selected by allowing the Power Meter to autorange to the desired range, then pressing the RANGE HOLD switch to hold the range. For Remote operation, the programming codes have providion for direct selection of the desired range as well as selection of the autorange function.

3-70. An additional feature that is only available via remote programming is selection of standby, triggered, or free running operation of the Power

Table 3-6. Power Meter Output Data Printout for HP 5055A Digital Recorder

Column	Interpretation
1 (right)	Units Digit
2	Tens Digit
3	Hundreds Digit
4	Thousands Digit
5	Sign
6	Range*
7	Mode**
8	Status***
9	Exponent Units Digit
10 (left)	Exponent Tens Digit
Intrepret measured value as XXXX . $10^{-\text{EXPONENT}}$	

*Range Code	1 = Range 1 (most sensitive) 2 = Range 2 3= Range 3 4 = Range 4 5 = Range 5 (least sensitive)
**Mode Decode	V = dB [REF] A = dB (REL) Ω = Watts * = dBm
***Status	0 = In Range 1 = Underrange (WATT Mode) 2 = Overrange 3 = Underrange (dBm Mode) 4 = ZERO Mode

BCD Remote Programming (cont'd)

Meter. (During Local operation, the Power Meter is allowed to free run with approximately 133 milliseconds allowed for settling time between measurements.) The specific remote triggering capabilities are:

a. Hold - when the power meter is programmed to Hold, it is inhibited from taking measurements and from outputting data. Thus, it is set to a predetermined reference condition from which a measurement can be triggered synchrously to some external event.

b. Trigger Immediate - this programming command directs the Power Meter to make one measurement and output the data in the minimum possible time, then to go into Hold until the next Triggering command is recieved. It does not allow settling time prior to the measurement.

c. Trigger with Delay - this trigger command is identical to the trigger immediate command except that it causes the Power Meter to execute a settling-time delay subroutine before taking a measurement and outputting data.

d. Free run at maximum rate - this programming command is normally used for asynchronous operation of the Power Meter. It directs the Power Meter to continuously take measurements and output data in the minimum possible time. It does not allow settling time prior to each measurement.

e. Free run with Delay - this programming command is identical to the previous command except that it causes the Power Meter to execute a settling-time delay subroutine prior to each measurement.

3-71. When programming the Power Meter for synchronous triggered operation, there are two factors that the programmer must consider to ensure the validity of the output measurement data. The first factor is the time that it takes the Power Meter to respond to a full scale change in input power level. A typical Power Meter response curve is shown in Figure 3-4. By comparing this curve with the measurement timing cycle shown in Figure 3-6 and summarized in Table 3-5, the validity of the Power Meter output can be tabulated according to operating range and triggering interval - versus change in input power level. A general summay of this information is as follows:

a. When the Power Meter is programmed for trigger with settling time operation, sufficient time is provided for the Power Meter to settle to the input power level on all ranges except range 1. On range 1 approximately 10 seconds (0-10 measurements) are required for the Power Meter to settle

b. When the Power Meter is programmed for trigger immediate operation, the desired amount of settling time can be incorporated into the operating program.

3-72. The programming codes that the Power Meter will respond to are listed in Table 3-8.

3-73. POWER MEASUREMENT ACCURACY

3-74. A power measurement is never free from error or uncertainty. Any RF system has RF losses, mismatch losses, mismatch uncertainy, instrumentation uncertainty and calibration uncertainty. Measurement errors as high as 50% are not only possible, they are highly likely unless the error sources are understood and, as much as possible, eliminated.

3-75. Sources of Error and Measurement Uncertainty

3-76. RF Losses. Some of the RF power that enters the Power Sensor is not dissipated in the power sensing elements. This RF loss is caused by dissipation in the walls of waveguide power sensors, in the center conductor of coaxial power sensors, in the dielectric of capacitors, connections within the sensor, and radiation losses.

3-77. Mismatch. The result of mismatched impedances between the device under test and the power sensor is that some of the power fed to the sensor is reflected before it is dissipated in the load. Mismatches affect the measurement in two ways. First, the initial reflection is a simple loss and is called mismatch loss. Second, the power reflected from the sensor mismatch travels back up the transmission line until it reaches the source. There, most of it is dissipated in the source impedance, but some of its re-reflected by the source mismatch. The re-reflected power returns to the power sensor and adds to, or subtracts from, the incident power. For all practical purposes, the effect the re-reflected power has upon the power measurement is unpredictable. This effect is called mismatch uncertainty.

Sources of Error and Measurement Uncertainty (cont'd)

3-78. Instrumentation Uncertainty. Instruments: tion uncertainty describes the ability of the metering circuits to accurately measure the dc output from the Power Sensor's power sensing device. In the Power Meter this error is ± 0.5% for Ranges 1 through 5. It is important to realize, however, that these uncertainty specifications do not indicate overall measurement accuracy.

3-79. Power Reference Uncertainty. The output level of the Power Reference Oscillator is factory set to 1 mW ± 0.70% at 50 MHz. This reference is normally used to calibrate the system, and is, therefore, a part of the system's total measurement uncertainty.

3-80. Cal Factor Switch Resolution Error. The resolution of the CAL FACTOR % switch contributes a significant error to the total measurement because the switch has 2% steps. The maximum error possible in each position is ± 0.5%

3-81. Corrections for Error

3-82. The two correction factors basic to power meters are calibration factor and effective efficiency. Effective efficiency is the correction factor for RF losses within the Power Sensor. Calibration factor takes into account the effective efficiency and mismatch losses.

3-83. Calibration factor is expressed as a percentage with 100% meaning the power sensor has no losses. Normally the calibration factor will be 100% at 50 MHz, the operating frequency of the internal reference oscillator.

3-84. The Power Sensors used with the Power Meter have individually calibrated calibration factor curves placed on their covers. To correct for RF and mismatch losses, simply find the Power Sensor's calibration factor at the measurement frequency from the curve or the table that is supplied with the Power Sensor and set the CAL FACTOR % switch to this value. The measurement error due to this error is now minimized.

3-85. The CAL FACTOR % switch resolution error of ± 0.5% may be reduced by one of the following methods:

a. Leave the CAL FACTOR % switch on 100% after calibration, then make the measurement and record the reading. Use the reflection coefficient, magnitude and phase angle from the table supplied with the Power Sensor to calculate the corrected power level.

b. Set the CAL FACTOR % switch to the nearest position above and below the correction factor given on the table. Interpolating between the power levels measured provides the corrected power level.

3-86. Calculating Total Uncertainty

3-87. Certain errors in calculating the total measurement uncertainty have been ignored in this discussion because they are beyond the scope of this manual. Application Note AN-64, "Microwave Power Measurement", delves deeper into the calculation of power measurement uncertainties. It is available, on request, from your nearest HP office.

3-88. Known Uncertainties. The known uncertainties which account for part of the total power measurement uncertainty are:

a. Instrumentation uncertainty **±0.5% or** ± 0.02 dB (Range 1 through 5).

b. Power reference uncertainty **±0.7% or** ± 0.03 dB.

c. CAL FACTOR switch resolution ±0.5% or ±0.02 dB.

The total uncertainty from these sources is ±1.7% or ±0.07 dB.

3-89. Calculating Mismatch Uncertainty. Mismatch uncertainty is the result of the source mismatch interacting with the Power Sensor mismatch. The magnitude of uncertainty is related to the magnitudes of the source and Power Sensor reflection coefficients, which can be calculated from SWR. Figure 3-9 shows how the calculations are to be made and Figure 3-10 illustrates mismatch uncertainty and total calculated uncertainty for two cases. In the first case, the Power Sensor's SWR = 1.5, and in the second case, the Power Sensor's SWR = 1.26. In both cases the source has a SWR of 2.0. The example shows the effect on power measurement accuracy a poorly matched power sensor will have as compared to one with low mismatch.

3-90. A faster, easier way to find mismatch uncertainty is to use the HP Mismatch Error (uncer-

Calculating Total Uncertainty (cont'd)

tainty) Limits/Reflectometer Calculator. The calculator may be obtained, on request, from your nearest Hewlett-Packard office by using HP Part Number 5952-0448.

3-91. The method of calculating measurement uncertainty from the uncertainty in dB is shown by Figure 3-11. This method would be used when the initial uncertainty calculations were made with the Mismatch Error/Reflectometer Calculator.

NOTE

The BCD output data levels are TTL compatible. A false (0) state is defined as 0.0 to +0.4 Vdc and a true state is defined as +2.5 to +5.0 Vdc

Table 3-7. BCD Output Data Codes (1 of 2)

Function		Code	
MEASURED VALUE - The Power Meter format for outputting the measured value is SIGN, Four BCD DIGITS, and a negative EXPONENT. It is interpreted as: ± XXXX · (10) — EXPONENT *not printed*		**NOTES** *Pin numbers refer to connector J7 on the rear panel.* *When used with 5055A, a four line format is established by the following pins:* *34 (ground)* *10 (measurement rate; floats high)* *35 (cal factor disable; floats high)*	
Sign space (+)		PIN 9 0 1	
Digits		Weight	Pin Number
Units	10°A	1	1
	10°B	2	2
	10°C	4	26
	10°D	8	27
Tens	10^1A	1	3
	10^1B	2	4
	10^1C	4	28
	10^1D	8	29
Hundreds	10^2A	1	5
	10^2B	2	6
	10^2C	4	30
	10^2D	8	31
Thousands	10^3A	1	7
	10^3B	2	8
	10^3C	4	32
	10^3D	8	33

Table 3-7. BCD Output Data Codes (2 of 2)

Function		Code		
STATUS OUTPUTS		Pin 40	Pin 16	Pin 15
	In Range	0	0	0
	Underrange (WATT Mode)	0	0	1
	Overrange	0	1	0
	Underrange (dBm Mode)	0	1	1
	Zero Mode	1	0	0
RANGE - indicates range on which last measurement made.		Pin 36	Pin 12	Pin 11
	1 (most sensitive)	0	0	1
	2	0	1	0
	3	0	1	1
	4	1	0	0
	5 (least sensitive)	1	0	1
EXPONENT		Weight	Pin	
	Units EX^0A	1	17	
	EX^0B	2	18	
	EX^0C	4	42	
	EX^0D	8	43	
	Tens EX^1A	1	19	
	Note: *when used with 5055A, four line format is established by following pins:* *20 (ground)* *44 (ground)* *45 (ground)*			
		Pin 14	Pin 13	
MODE	dB [REF]	0	0	
	dB (REL)	0	1	
	WATT	1	0	
	dBM	1	1	
	Note: *when used with 5055A, four line format is established by following pins:* *38 (floats high)* *39 (floats high)*			
PRINT		High to low transition on pin 48 when output data is valid.		

Table 3-8. BCD Programming Commands

<table>
<tr><th>Commands</th><th>Input Pin</th><th>Function</th></tr>
<tr><td>Remote enable</td><td>J7-21</td><td>When high, enables local operation of Power Meter via front-panel controls. When low, enables remote operation of Power Meter via programming commands listed below.
NOTE
When equipped with the BCD Option 024, the Power Meter generates a Print command and provides valid output data after each measurement for both Local and Remote operation.</td></tr>
<tr><td>Range Bit 1
Range Bit 2
Range Bit 3</td><td>J7-24
J7-25
J7-23</td><td>Select Power Meter measurement range when Remote Enable input is low.
<table>
<tr><th>Range</th><th>Pin 24</th><th>Pin 25</th><th>Pin 23</th></tr>
<tr><td>0*</td><td>0</td><td>0</td><td>0</td></tr>
<tr><td>1</td><td>0</td><td>0</td><td>1</td></tr>
<tr><td>2</td><td>0</td><td>1</td><td>0</td></tr>
<tr><td>3</td><td>0</td><td>1</td><td>1</td></tr>
<tr><td>4</td><td>1</td><td>0</td><td>0</td></tr>
<tr><td>5</td><td>1</td><td>0</td><td>1</td></tr>
<tr><td>Auto</td><td>1</td><td>1</td><td>X (0 or 1)</td></tr>
</table>
*Standby range: Power Meter operating program is held at Power Up address 000_8.</td></tr>
<tr><td>Rate
Inhibit</td><td>J7-10
J7-47</td><td>Selects Power Meter triggering when remote enable input is low
<table>
<tr><th></th><th>Pin 10</th><th>Pin 47</th><th>Pin 49</th></tr>
<tr><td>Hold</td><td>X (0 or 1)</td><td>0</td><td>X (0 or 1)</td></tr>
<tr><td>Trigger Intermediate</td><td>0</td><td>0</td><td rowspan="2">Positive-to-negative transition</td></tr>
<tr><td>Trigger with Delay</td><td>1</td><td>0</td></tr>
<tr><td>Free Run Fast</td><td>0</td><td>1</td><td>X (0 or 1)</td></tr>
<tr><td>Free Run with Delay</td><td>1</td><td>1</td><td>X (0 or 1)</td></tr>
</table></td></tr>
<tr><td>Cal Factor Disable</td><td>J7-35</td><td>When low disables front-panel CAL FACTOR % switch (same as 100% position). When high, enables switch.</td></tr>
<tr><td>Mode Bit 1
Mode Bit 2</td><td>J7-38
J7-39</td><td>Select mode when remote enable input is low.
<table>
<tr><th>Mode</th><th>Pin 38</th><th>Pin 39</th></tr>
<tr><td>dB [REF]</td><td>0</td><td>0</td></tr>
<tr><td>dB (REL)</td><td>1</td><td>0</td></tr>
<tr><td>WATT</td><td>0</td><td>1</td></tr>
<tr><td>dBm</td><td>1</td><td>1</td></tr>
</table></td></tr>
<tr><td>SENSOR Zero Select</td><td>J7-46</td><td>When low, enables power sensor auto zero circuit.
NOTE
When programming this function, allow the circuit about 7 seconds to settle before applying input power to Power Sensor. If RF input power is applied while ZERO lamp is on, it will introduce an offset that will affect future measurements.</td></tr>
</table>

CALCULATING MEASUREMENT UNCERTAINTY

1. Calculate the reflection coefficient from the given SWR.

$$\rho = \frac{SWR - 1}{SWR + 1}$$

Power Sensor #1	Power Sensor #2	Power Source
$\rho_1 = \frac{1.5-1}{1.5+1}$	$\rho_2 = \frac{1.25-1}{1.25+1}$	$\rho_s = \frac{2.0-1}{2.0+1}$
$= \frac{0.5}{2.5}$	$= \frac{0.25}{2.25}$	$= \frac{1.0}{3.0}$
$= 0.2$	$= 0.111$	$= 0.333$

2. Calculate the relative power and percentage power mismatch uncertainties from the reflection coefficients. An initial reference level of 1 is assumed.

Reletive Power Uncertainty

$PU = [1 \pm (\rho_n \rho_s)]^2$ where P_n = SWR of Power Sensor # n, P_s = SWR of Power Source

$PU_1 = \{1 \pm [(0.2)(0.333)]\}^2$	$PU_2 = \{1 \pm [(0.111)(0.333)]\}^2$
$= \{1 \pm 0.067\}^2$	$= \{1 \pm 0.037\}^2$
$= \{1.067\}^2$ and $\{0.933\}^2$	$= \{1.037\}^2$ and $\{0.963\}^2$
$= 1.138$ and 0.870	$= 1.073$ and 0.938

Percentage Power Uncertainty

%PU = (PU - 1) 100% for PU >1 and -(1 - PU) 100% for PU <1

% P U_1 =	(1.138 - 1) 100%	and -(1 - 0.870) 100%
	= (0.138) 100%	and -(0.130) 100%
	= 13.8%	and -13.0%
% P U_2 =	(1.073 - 1) 100%	and -(1 - 0.928) 100%
	= (0.073) 100%	and -(0.072) 100%
	= 7.3%	and -7.2%

Figure 3-9. Calculating Measurement Uncertainties (1 of 2)

CALCULATING MEASUREMENT UNCERTAINTY

3. Calculate the Measurement Uncertainty in dB.

$$MU = 10\left[\log_{10}\left(\frac{P_1}{P_0}\right)\right] \text{ dB for } \frac{P_1}{P_0} > 1$$

$$= 10\left[\log\left(\frac{10P_1}{10P_0}\right)\right] \text{ dB}$$

$$= 10\ [\log(10P_1) - \log(10P_0)] \text{ dB for } \frac{P_1}{P_0}$$

$MU_1 = 10\left[\log\left(\frac{1.138}{1}\right)\right]$	and	10 [log (10) (0.870) - log (10) (1)]
$= 10\ [0.056]$	and	10 [log (8.70) - log (10)]
	and	10 [0.94 - 1]
	and	10 [- 0.060]
$= +0.56$ dB	and	- 0.60 dB
$MU_2 = 10\left[\log\left(\frac{1.073}{1}\right)\right]$	and	10 [log (10) (0.928) -log (10) (1)]
$= 10\ [0.031]$	and	10 [log (9.28) - log (10)]
	and	10 [0.968 - 1]
	and	10 [- 0.032]
$= +0.31$ dB	and	- 0.32 dB

Figure 3-9. Calculating Measurement Uncertainties (2 of 2)

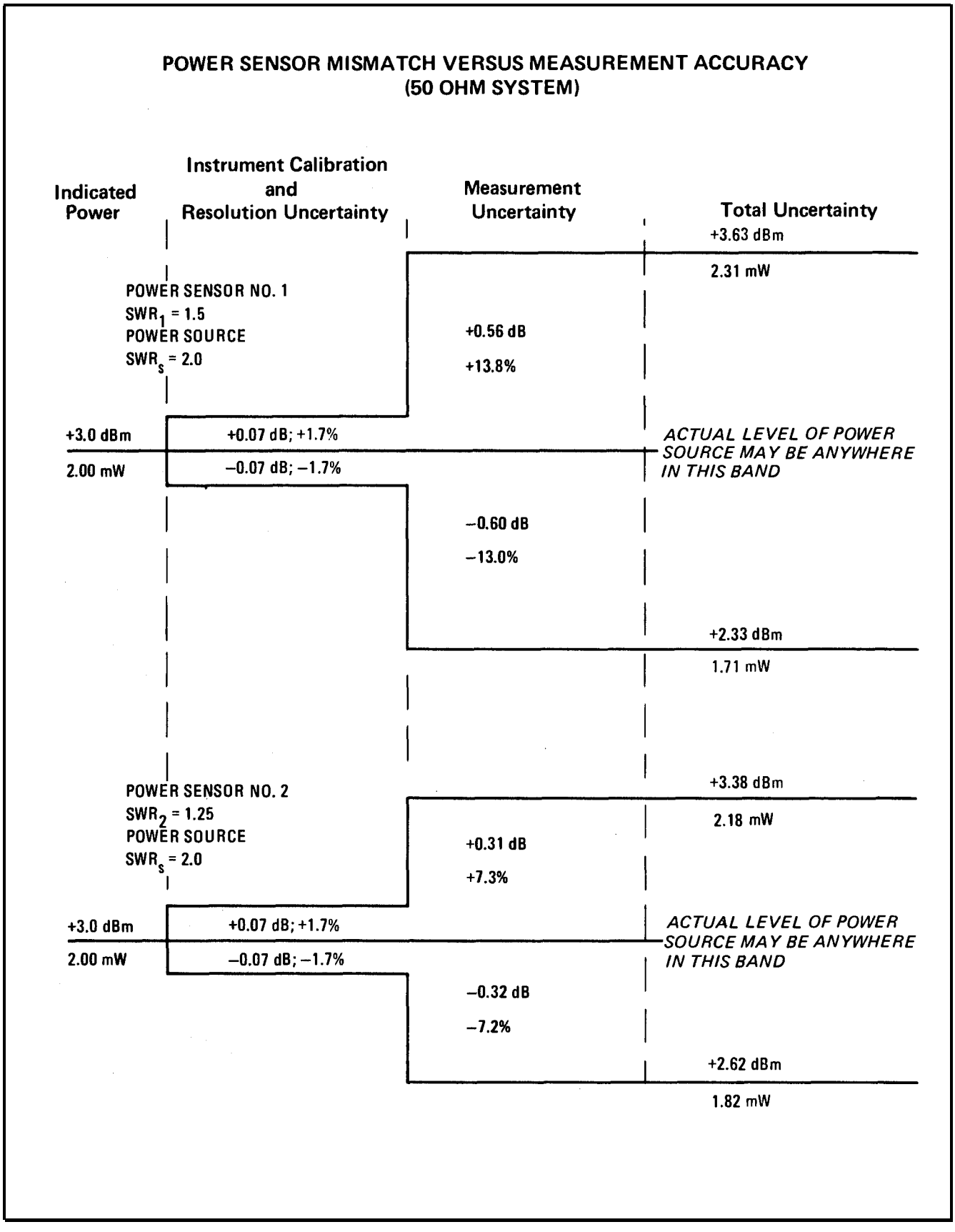

Figure 3-10. The Effect of Power Sensor Mismatch on Measurement Accuracy

CALCULATING MEASUREMENT UNCERTAINTY

1. For this example the known values are: source SWR, 2.2 and power sensor SWR, 1.16. From the Mismatch Error Calculator the mismatch uncertainty is found to be +0.24, -0.25 dB.

2. Add the known uncertainties from paragraph 3-73, (± 0.10 dB). Our total measurement uncertainty is +0.34, -0.35 dB.

3. Calculate the relative measurement uncertainty from the following formula:

$$dB = 10 \log \left(\frac{P_1}{P_0}\right)$$

$$\frac{dB}{10} = \log \left(\frac{P_1}{P_0}\right)$$

$$\frac{P_1}{P_0} = \log^{-1} \left(\frac{dB}{10}\right)$$

If dB is positive then:
$P_1 > P_0$; let $P_0 = 1$

$$MU = P_1 = \log^{-1} \left(\frac{dB}{10}\right)$$

$$= \log^{-1} \left(\frac{0.34}{10}\right)$$

$$= 1.081$$

If dB is negative then:
$P_1 < P_0$; let $P_1 = 1$

$$MU = P_0 = \frac{1}{\log^{-1} \left(\frac{dB}{10}\right)}$$

$$= \frac{1}{\log^{-1} \left(\frac{0.35}{10}\right)}$$

$$= \frac{1}{1.082}$$

$$= 0.923$$

4. Calculate the percentage Measurement Uncertainty.

For $P_1 > P_0$

$$\%MU = (P_1 - P_0)\ 100$$

$$= (1.081 - 1)\ 100$$

$$= +8.1\%$$

For $P_1 < P_0$

$$\%MU = -(P_1 - P_0)\ 100$$

$$= -(1 - 0.923)\ 100$$

$$= -7.7\%$$

Figure 3-11. Calculating Measurement Uncertainty (Uncertainty in dB Known)

SECTION IV
PERFORMANCE TESTS

4-1. INTRODUCTION

4-2. The procedures in this section test the electrical performance of the Power Meter using the specifications of Table 1-1 as performance standards. All tests can be performed without access to the interior of the instrument. A simpler operational test is included in Section III under Operator's Checks.

4-3. EQUIPMENT REQUIRED

4-4. Equipment required for the performance tests is listed in Table 1-2, Recommended Test Equipment. Any equipment that satisfies the critical specifications given in the table may be substituted for the recommended model(s).

4-5. TEST RECORD

4-6. Results of the performance tests may be tabulated on the Test Record at the end of the test procedures. The Test Record lists all of the tested specifications and their acceptable limits. Test results recorded at incoming inspection can be used for comparison in periodic maintenance, troubleshooting, and after repairs or adjustments.

4-7. PERFORMANCE TESTS

4-8. The performance tests given in this section are suitable for incoming inspection, troubleshooting, or preventive maintenance. During any performance test, all shields and connecting hardware must be in place. The tests are designed to verify published instrument specifications. Perform the tests in the order given and record the data on the test card and/or in the data spaces provided at the end of each procedure.

NOTE

The Power Meter must have a half-hour warmup and the line voltage must be within +5%, -10% of nominal if the performance tests are to be considered valid.

4-9. Each test is arranged so that the specification is written as it appears in Table 1-1. Next, a description of the test and any special instructions or problem areas are included. Each test that requires test equipment has a setup drawing and a list of the required equipment. The initial steps of each procedure give control settings required for that particular test.

PERFORMANCE TESTS

4-10. ZERO CARRYOVER TEST

SPECIFICATION: ±0.2% of full scale when zeroed on the most sensitive range.

DESCRIPTION: After the Power Meter is initially zeroed on the most sensitive range, the change in the digital readout is monitored as the Power Meter is stepped through its ranges. Thus, this test also takes noise and drift into account because noise , drift, and zero carry-over readings cannot be separated.

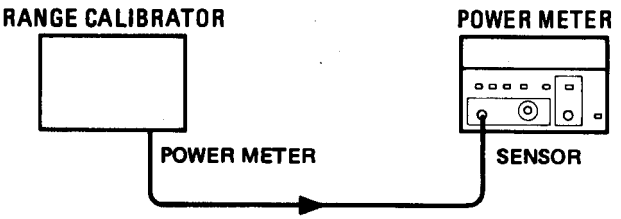

Figure 4-1. Zero Carryover Test Setup

EQUIPMENT: Range Calibrator . . . . . HP 11683A

PROCEDURE:

1. Set the Power Meter switches as follows:

   CAL FACTOR % 100
   POWER REF . . . . . off (out)
   MODE . . . . . WATT
   RANGE HOLD . . . . . off (out)
   LINE . . . . . ON (in)

2. Set the Range Calibrator switches as follows:

   FUNCTION . . . . . STANDBY
   POLARITY . . . . . NORMAL
   RANGE . . . . . 100 μW
   LINE . . . . . ON (in)

3. Connect the equipment as shown in Figure 4-1.

4. Press and hold the Power Meter SENSOR ZERO switch and wait for the digital readout to stabilize. Then verify that the Power Meter ZERO lamp is lit and that the digital readout indicates 0.00 ± 0.02.

NOTE

Power Meter is now zeroed on most sensitive range (10 μ W).

5. Release the Power Meter SENSOR ZERO switch and wait for the ZERO lamp to go out before proceeding to the next step.

6. Set the Range Calibrator FUNCTION switch to CALIBRATE and verify that the Power Meter autoranges to the 100 μW range.

7. Set the Power Meter RANGE HOLD switch to on (in) and the Range Calibrator FUNCTION switch to standby.

PERFORMANCE TESTS

4-10. ZERO CARRYOVER TEST (cont'd)

8. Wait for the Power Meter's digital readout to stabilize and verify that the indication observed is within the limits shown on the table below. Then set the POWER Meter RANGE HOLD switch to off (out).

9. Repeat steps 6, 7, and 8 with the Range Calibrator RANGE switch set, in turn, to 1 mW, 10 mW, and 100 mW. Verify that the Power Meter autoranges properly, and that the indication observed on each range is within the limits shown in Table 4-1.

Table 4-1. Zero Carryover Autorange Digital Readout Results

Range Calibrator and Power Meter Range	Results		
	Min	Actual	Max
10 μW	-0.02	_____	0.02
100 μW	-0.2	_____	0.2
1 mW	-.002	_____	.002
10 mW	-0.02	_____	0.02
100 mW	-00.2	_____	00.2

4-11. INSTRUMENT ACCURACY TEST

SPECIFICATION: WATT MODE: ±0.570 in Ranges 1 through 5.
dBm MODE: ±0.02 dB ±0.001 dB/°C in Ranges 1 through 5.
dB (REL) MODE: ±0.02 dB ±0.001 dB/°C in Ranges 1 through 5.

NOTE

The dB (REL) specifications are for within-range measurements. For range-to-range accuracy, add the uncertainty associated with the range in which the reference was entered, to the uncertainty associated with the range in which the measurement was made. For example, if a reference is entered in Range 1 and a measurement is made in Range 5, the total uncertainty is ±0.04 (Range 1 ±0.02 + Range 5 ± 0.02 = ± 0.04).

DESCRIPTION: After the Power Meter is initially calibrated on the 1 mW range, the digital readout is monitored as the Range Calibrator is adjusted to provide reference inputs corresponding to each of the Power Meter operating ranges.

PERFORMANCE TESTS

4-11. INSTRUMENT ACCURACY TEST (cont'd)

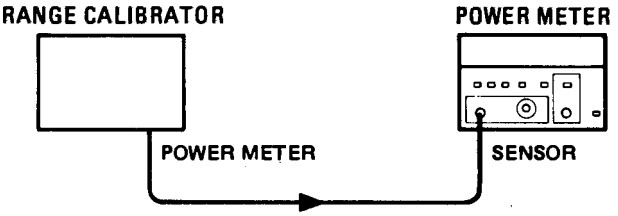

Figure 4-2. Instrument Accuracy Test Setup

EQUIPMENT: Range Calibrator . . . . . HP 11683A

PROCEDURE:

1. Set the Power Meter switches as follows:

   CAL FACTOR % 100
   POWER REF . . . . . off (out)
   MODE . . . . . WATT
   RANGE HOLD . . . . . off (out)
   LINE . . . . . ON (in)

2. Set the Range Calibrator switches as follows:

   FUNCTION . . . . . STANDBY
   POLARITY . . . . . NORMAL
   RANGE 1mW
   LINE . . . . . ON (in)

3. Connect the equipment as shown in Figure 4-2.

4. Press and hold the Power Meter SENSOR ZERO switch and wait for the digital readout to stabilize. Then verify that the Power Meter ZERO lamp is lit and that the digital readout indicates 0.00 ± 0.02.

NOTE

Power Meter is now zeroed on the most sensitive range (10 μW).

5. Release the Power Meter SENSOR ZERO switch and wait for the ZERO lamp to go out before proceeding to the next step.

6. Set the Range Calibrator FUNCTION switch to CALIBRATE and verify that the Power Meter autoranges to the 1 mW range.

7. Observe the Power Meter digital readout and, if necessary, adjust the front-panel CAL ADJ control to obtain a 1.000 ± 0.002 indication.

NOTE

The Range Calibrator output level is adjustable in 5 dB increments. Thus, the 3 μW, 30 μW, 300 μW, 3 mW, and 30 mW legends on the RANGE switch are approximations. The true outputs for these settings are 3.16 μW, 31.6 μW, 316 μW, 3.16 mW and 31.6 mW.

PERFORMANCE TESTS

4-11. INSTRUMENT ACCURACY TEST (cont'd)

8. Set the Range Calibrator RANGE switch, in turn, to 10 μW, 100 μW, 10 mW, and 100 mW. Verify that the Power Meter autoranges properly and that the indication observed on each range is within the limits specified in the table below.

9. Set the Power Meter MODE switch to dBm.

10. Set the Range Calibrator RANGE switch, in turn, to -20 dBm, -10 dBm, 0 dBm, +10 dBm, and +20 dBm. Verify that the Power Meter autoranges properly and that the indication observed on each range is within the limits specified in Table 4-2.

Table 4-2. Instrument Accuracy Test Results

Range Calibrator and Power Meter Range	Results			Range Calibrator and Power Meter Range	Results		
	Min	Actual	Max		Min	Actual	Max
10 μW	9.95	_____	10.05	-20 dBm	-20.02	_____	-19.98
100 μW	99.5	_____	100.5	-10 dBm	-10.02	_____	-9.98
1 mW	0.995	_____	1.005	0 dBm	-0.02	_____	0.02
10 mW	9.95	_____	10.05	+10 dBm	9.98	_____	10.02
100 mW	99.0	_____	101.0	+20 dBm	19.96	_____	20.04

11. Set the Range Calibrator RANGE switch to -10 dBm.

12. Set the Power Meter MODE switch to dB [REF] and verify that the digital readout indicates 0.00 ± 0.01.

13. Set the Range Calibrator RANGE switch, in turn, to -20 dBm, -5 dBm, and +10 dBm. Verify that the Power Meter autoranges properly, and that the indication observed on each range is within the limits specified in Table 4-3.

Table 4-3. Instrument Accuracy Test Results for dB [REF] Mode

Range Calibrator and Power Meter Ranges	Results		
	Min	Actual	Max
-20 dBm	-9.96	_____	-10.04
-5 dBm	+4.96	_____	+5.04
+10 dBm	+19.96	_____	20.04

PERFORMANCE TESTS

4-12. CALIBRATION FACTOR TEST

SPECIFICATION: 16-position switch normalizes meter reading to account for calibration factor. Range 85% to 100% in 1% steps. 100% position corresponds to calibration factor at 50 MHz.

DESCRIPTION: After the Power Meter is zeroed on the most sensitive range, a 1 mW, input level is applied to the Power Meter and the CAL ADJ control is adjusted to obtain a 1.000 mW indication. Then the CAL FACTOR % switch is stepped through its 16 positions and the digital readout is monitored to ensure that the proper indication is obtained for each position.

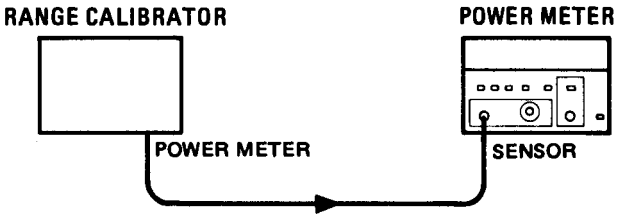

Figure 4-3. Calibration Factor Test Setup

PROCEDURE:

1. Set the Power Meter switches as follows:

   CAL FACTOR % 100
   POWER REF . . . . . off (out)
   MODE . . . . . WATT
   RANGE HOLD . . . . . off (out)
   LINE . . . . . ON (in)

2. Set the Range Calibrator switches as follows:

   FUNCTION . . . . . STANDBY
   POLARITY . . . . . NORMAL
   RANGE 1mW
   LINE . . . . . ON (in)

3. Connect the equipment as shown in Figure 4-3.

4. Press and hold the Power Meter SENSOR ZERO switch and wait for the digital readout to stabilize. Then verify that the Power Meter ZERO lamp is lit and that the digital readout indicates 0.00 ± 0.02.

NOTE

Power Meter is now zeroed on most sensitive range (10 μW)

5. Release the Power Meter SENSOR ZERO switch and wait for the ZERO lamp to go out before proceeding to step 6.

6. Set the Range Calibrator FUNCTION switch to CALIBRATE and verify that the Power Meter autoranges to the 1 mW range.

7. Adjust the Power Meter CAL ADJ control to obtain a 1.000 ± 0.002 indication on the digital readout.

PERFORMANCE TESTS

4-12. CALIBRATION FACTOR TEST (cont'd)

8. Set the CAL FACTOR % switch, in turn, to each position and verify that the indications observed are within the limits specified in Table 4-4.

Table 4-4. Calibration Factor Test Results

CAL FACTOR Switch Position	Results			CAL FACTOR Switch Position	Results		
	Min.	Actual	Max.		Min.	Actual	Max.
100	0.994		1.006	92	1.081		1.093
99	1.004		1.016	91	1.093		1.105
98	1.014		1.026	90	1.105		1.117
97	1.025		1.037	89	1.118		1.130
96	1.036		1.048	88	1.130		1.142
95	1.047		1.059	87	1.143		1.155
94	1.058		1.070	86	1.157		1.169
93	1.069		1.081	85	1.170		1.182

4-13. POWER REFERENCE LEVEL TEST

SPECIFICATION: Internal 50 MHz oscillator factory set to 1 mW ± 0.7% traceable to the National Bureau of Standards.
Accuracy: ±1.2% worst case (±0.9% rms) for one year (0°C to 55°C).

DESCRIPTION: The power reference oscillator output is factory adjusted to 1 mW ± 0.7%. To achieve this accuracy, Hewlett-Packard employs a special measurement system accurate to 0.5% (traceable to the National Bureau of Standards) and allows for a transfer error of ±0.2% in making the adjustment. If an equivalent measurement system is employed for verification, the power reference oscillator output can be verified to 1 mW ±1.9% (±1.2% accuracy + ±0.5% verification system error + ±0.2% transfer error = 1.9% maximum error). The power reference oscillator can be set to ±0.7% using the same equipment and following the adjustment procedure in paragraph 5-22. To ensure maximum accuracy in verifying the power reference oscillator output, the following procedure provides step-by-step instructions for using specified Hewlett-Packard test instruments of known capability. If equivalent test instruments are used, signal acquisition criteria may vary and reference should be made to the manufacturer's guidelines for operating the instruments.

NOTE

The Power Meter may be returned to the nearest Hewlett-Packard office to have the power reference oscillator checked and/or adjusted. Refer to Section II, PACKAGING.

PERFORMANCE TESTS

4-13. POWER REFERENCE LEVEL TEST (cont'd)

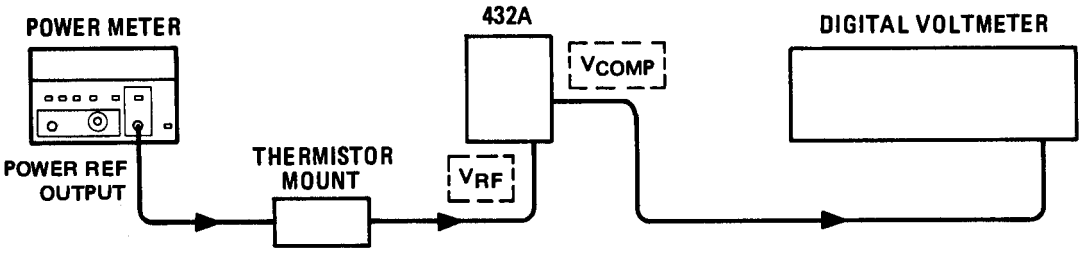

Figure 4-4. Power Reference Level Test Setup

EQUIPMENT:

Power Meter . . . . . HP 432A
Thermistor Mount . . . . . HP 478A-H75
Digital Voltmeter (DVM). . . . HP 3490A

PROCEDURE:

1. Set up the DVM to measure resistance and connect the DVM between the V_{RF} connector on the rear panel of the 432A, and pin 1 on the thermistor mount end of the 432A interconnect cable.

2. Round off the DVM indication to two decimal places and record this value as the internal bridge resistance (R) of the 432A (approximately 200 ohms).

3. Connect the 432A to the Power Meter as shown in Figure 4-4.

4. Set the Power Meter LINE switch to ON (in) and the POWER REF switch to off (out). Then wait thirty minutes for the 432A thermistor mount to stabilize before proceeding to the next step.

5. Set the 432A RANGE switch to COARSE ZERO and adjust the front-panel COARSE ZERO control to obtain a zero meter indication.

6. Fine zero the 432A on the most sensitive range, then set the 432A RANGE switch to 1 mW.

NOTE

Ensure that DVM input leads are isolated from chassis ground when performing the next step.

7. Set up the DVM to measure microvolt and connect the positive and negative input leads, respectively, to the V_{COMP} and V_{RF} connectors on the rear panel of the 432A.

8. Observe the indication on the DVM. If less than 400 microvolt, proceed to the next step. If 400 microvolt or greater, press and hold the 432A FINE ZERO switch and adjust the COARSE ZERO control so that the DVM indicates 200 microvolt or less. Then release the FINE ZERO switch and proceed to the next step.

9. Round off the DVM indication to the nearest microvolt and record this value as V_0.

PERFORMANCE TESTS

4-13. POWER REFERENCE LEVEL TEST (cont'd)

10. Set the Power Meter POWER REF switch to ON (in) and record the indications observed on the DVM as V_1.

11. Disconnect the DVM negative input lead from the V_{RP} connector on the 432A and reconnect it to 432A chassis ground. Record the new indication observed on the DVM as V_{COMP}.

12. Calculate the power reference oscillator output level (P_{RF}) from the following formula:

$$P_{RF} = \frac{2\,V_{COMP}\,(V_1 - V_0) + V_0^2 - V_1^2}{4R\,(\text{CALIBRATION FACTOR})}$$

Where:

P_{RF} = power reference oscillator output level

v_{COMP} = previously recorded value

V_1 = previously recorded value

V_0 = previously recorded value

R = previously recorded value

CALIBRATION FACTOR = value for thermistor mount at 50 MHz (traceable to the National Bureau of Standards)

13. Verify that the P_{RF} is within the following limits:

Min.	Actual	Max.
0.981 mW	_____	1.019 mW

Table 4-5. Performance Test Record (1 of 2)

Hewlett-Packard Company
Model 436A
Power Meter

Tested By _____

Serial Number _____ Date _____

Para. No.	Test	Results		
		Min	Actual	Max
4-10.	**ZERO CARRYOVER**			
	10 µW	-0.02 µW	_____	0.02 µW
	100 µW	-0.2 µW	_____	0.2 µW
	1 mW	-0.002 mW	_____	0.002 mW
	10 mW	-0.02 mW	_____	0.02 mW
	100 mW	-0.2 mW	_____	0.2 mW
4-11.	**INSTRUMENTATION ACCURACY**			
	WATT MODE			
	10 µW	9.95 µW	_____	10.05 µW
	100 µW	99.5 µW	_____	100.5 µW
	1 mW	0.995 mW	_____	1.005 mW
	10 mW	9.95 mW	_____	10.05 mW
	100 mW	99.5 mW	_____	100.5 mW
	dBm MODE			
	-20 dBm	-20.02 dBm	_____	-19.98 dBm
	-10 dBm	-10.02 dBm	_____	-9.98 dBm
	0 dBm	-0.02 dBm	_____	0.02 dBm
	10 dBm	9.95 dBm	_____	10.02 dBm
	20 dBm	19.96 dBm	_____	20.04 dBm
	dB (REL) MODE			
	-20 dBm	-9.96 dBm	_____	-10.04 dBm
	- 5 dBm	+4.96 dBm	_____	+5.04 dBm
	+10 dBm	+19.96 dBm	_____	20.04 dBm
4-12.	**CALIBRATION FACTOR**			
	100	0.994 mW	_____	1.006 mW
	99	1.004 mW	_____	1.016 mW
	98	1.014 mW	_____	1.026 mW
	97	1.025 mW	_____	1.037 mW
	96	1.036 mW	_____	1.048 mW
	95	1.047 mW	_____	1.059 mW
	94	1.058 mW	_____	1.070 mW
	93	1.069 mW	_____	1.081 mW

Table 4-5. Performance Test Record (2 of 2)

Para. No.	Test	Results		
		Min.	Actual	Max
4-12.	**CALIBRATION FACTOR (cont'd)**			
	92	1.081 mW	_____	1.093 mW
	91	1.093 mW	_____	1.105 mW
	90	1.105 mW	_____	1.117 mW
	89	1.118 mW	_____	1.130 mW
	88	1.130 mW	_____	1.142 mW
	87	1.143 mW	_____	1.155 mW
	86	1.157 mW	_____	1.169 mW
	85	1.170 mW	_____	1.182 mW
4-13	**POWER REFERENCE**			
	P_{RF}	0.981 mW	_____	1.019 mW

SECTION V
ADJUSTMENTS

5-1. INTRODUCTION

5-2. This section describes the adjustments which will return the Power Meter to peak operating condition after repairs are completed.

5-3. If the adjustments are to be considered valid, the Power Meter must have a half-hour warmup and the line voltage must be within +5 to -10% of nominal.

5-4. SAFETY CONSIDERATIONS

5-5. Although this instrument has been designed in accordance with international safety standards, this manual contains information, cautions, and warnings which must be followed to ensure safe operation and to retain the instrument in safe condition (see Sections II and III). Service and adjustments should be performed only by qualified service personnel.

WARNING

Any interruption of the protective (grounding) conductor (inside or outside the instrument) or disconnection of the protective earth terminal is likely to make the instrument dangerous. Intentional interruption is prohibited.

5-6. Any adjustment, maintenance, and repair of the opened instrument with voltage applied should be avoided as much as possible and, when inevitable, should be carried out only by a skilled person who is aware of the hazard involved.

5-7. Capacitors inside the instrument may still be charged even if the instrument has been disconnected from its source of supply.

5-8. Make sure that only fuses with the required rated current and of the specified type (normal blow, time delay, etc.) are used for replacement. The use of repaired fuses and the shortcircuiting of fuseholders must be avoided.

5-9. Whenever it is likely that the protection offered by fuses has been impaired, the instrument must be made inoperative and secured against any unintended operation.

WARNING

Adjustments described herein are performed with power supplied to the instrument while protective covers are removed. Energy available at many points may, if contacted, result in personal injury.

5-10. EQUIPMENT REQUIRED

5-11. The test equipment required for the adjustment procedures is listed in Table 1-2, Recommended Test Equipment. The critical specifications of substitute test instruments must meet or exceed the standards listed in the table if the Power Meter is to meet the standards set forth in Table 1-1, Specifications.

5-12. FACTORY SELECTED COMPONENTS

5-13. Factory selected components are indicated on the schematic and replaceable parts list with an asterisk immediately following the reference designator. The nominal value of the component is listed. Table 5-1 lists the parts by reference designator and provides an explanation of how the component is selected, the normal value range, and a reference to the appropriate service sheet. The Manual Changes supplement will update any changes to factory selected component information.

5-14. ADJUSTMENT LOCATIONS

5-15. The last foldout in this manual contains a table which cross-references all pictorial and schematic locations of the adjustment controls. The accompanying figure shows the locations of the adjustable controls, assemblies, and chassis-mounted parts.

ADJUSTMENTS

Table 5-1. Factory Selected Components

Reference Designator	Selected For	Normal Value Range	Service Sheet
A2R18	A display readout of 100.0 mW if the Power Meter, after being properly adjusted, passes all of the Instrumentation Accuracy Tests specified in Section IV except for the high range (100 mW/20 dBm)	196K (150KΩ to 250KΩ)	7
A2R50	Adjust A2R69 FREQ (Frequency Adj) for maximum indication on digital readout, then check frequency of 220 Hz Multivibrater. If out of specification (220 ± 16 Hz) select value for A2R50 to produce maximum indication on digital readout while 220 Hz Multivibrator frequency is in specification.	13.3KΩ (10KΩ to 17.8KΩ)	7
A8R5	A Power Reference Oscillator output of 1 mW if this value falls outside the range of adjustment available with LEVEL ADJUST potentiometer A8R5.	7100 (7100Ω to 7500Ω)	14

5-16. DC OFFSET ADJUSTMENT

REFERENCE: Service Sheet 8.

DESCRIPTION: DC OFF potentiometer A3R2 is adjusted to remove any dc voltage introduced by the dc amplifier

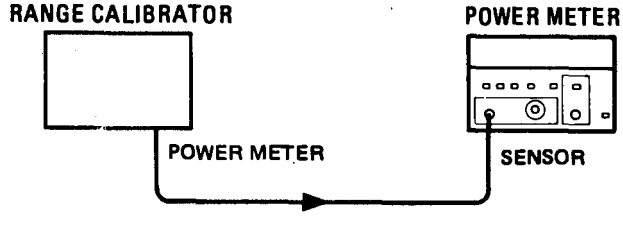

Figure 5-1. DC Offset Adjustment Setup

EQUIPMENT: Range Calibrator . . . . . Hp 11683A

PROCEDURE: 1. Set the Power Meter Switches as follows:

CAL FACTOR % 100
POWER REF . . . . . off (out)
MODE . . . . . WATT
RANGE HOLD . . . . . off (out)
LINE . . . . . ON (in)

ADJUSTMENTS

5-16. DC OFFSET ADJUSTMENT (cont'd)

2. Set the Range Calibrator switches as follows:

   FUNCTION . . . . . CALIBRATE
   POLARITY . . . . . NORMAL
   RANGE 100mW
   LINE . . . . . ON (in)

3. Connect the equipment as shown in Figure 5-1.

4. Verify that the Power Meter autoranges to the 100 mW range, then set the RANGE HOLD switch to ON (in).

5. Set the Range Calibrator FUNCTION switch to STANDBY.

6. Remove the Power Meter top cover and adjust DC OFF potentiometer A3R2 so that the digital readout indicates 00.0 with a blinking minus sign.

5-17. AUTO ZERO OFFSET ADJUSTMENT

REFERENCE: Service Sheet 8.

DESCRIPTION: ZERO OFF potentiometer A3R47 is adjusted to remove any dc offset that is introduced when the SENSOR ZERO switch is pressed.

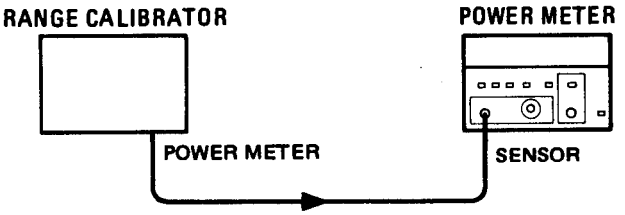

Figure 5-2. Auto Zero Offset Adjustment Setup

EQUIPMENT: Range Calibrator . . . . . HP 11683A

PROCEDURE: 1. Set the Power Meter switches as follows:

   CAL FACTOR % 100
   POWER REF . . . . . off (out)
   MODE . . . . . WATT
   RANGE HOLD . . . . . off (out)
   LINE . . . . . ON (in)

2. Set the Range Calibrator switches as follows:

   FUNCTION . . . . . STANDBY
   POLARITY . . . . . NORMAL
   LINE . . . . . ON (in)

3. Connect the equipment as shown in Figure 5-2.

5-17. AUTO ZERO OFFSET ADJUSTMENT (cont'd)

4. Verify that the Power Meter autoranges to the 10 μW range, and remove the Power Meter top cover.

NOTE

If specified indication cannot be obtained in next step, perform DC Spike Balance Adjustment. Then repeat this procedure.

5. Press and hold the Power Meter SENSOR ZERO switch and adjust ZERO OFF potentiometer A3R47 so that the digital readout indicates 0.00 with blinking minus sign.

5-18. SPIKE BALANCE ADJUSTMENT

REFERENCE: Service Sheets 7 and 8.

DESCRIPTION: A reference signal is applied to the Power Meter from the Range Calibrator to force the sensor zero circuit to its negative extreme. The SENSOR ZERO switch is then held pressed while BAL potentiometer A3R65 is adjusted to center the sensor zero circuit output voltage range.

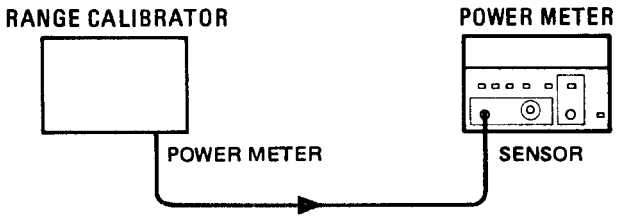

Figure 5-3. Spike Balance Adjustment Setup

EQUIPMENT: Range Calibrator . . . . . HP 11683A

PROCEDURE: 1. Set the Power Meter switches as follows:

CAL FACTOR % 100
POWER REF. . . . . off (out)
MODE . . . . . WATT
RANGE HOLD . . . . . off (out)
LINE . . . . . ON (in)

2. Set the Range Calibrator switches as follows:

FUNCTION . . . . . CALIBRATE
POLARITY . . . . . NORMAL
RANGE . . . . . 100 μW
LINE . . . . . ON (in)

ADJUSTMENTS

5-18. SPIKE BALANCE ADJUSTMENT (cont'd)

3. Remove the Power Meter top cover and adjust the front-panel CAL ADJ control so that the digital readout indicates 100.0 μW

4. Press and hold the Power Meter SENSOR ZERO switch and adjust BAL potentiometer A3R65 so that the display readout indicates 60.0 ± 0.2 μW.

NOTE

The Power Meter sensor zero circuit must be re-zeroed as described in the following steps before valid power measurements can be made.

5. Set the Range Calibrator FUNCTION switch to standby. Then press the Power Meter SENSOR ZERO switch and wait for the digital readout to stabilize.

6. Release the Power Meter SENSOR ZERO switch and wait for the ZERO lamp to go out.

5-19. MULTIVIBRATOR ADJUSTMENT

REFERENCE: Service Sheet 7.

DESCRIPTION: FREQ potentiometer A2R69 is adjusted to set the reference frequency of the multivibrator which drives the phase detector and the FET power sensor.

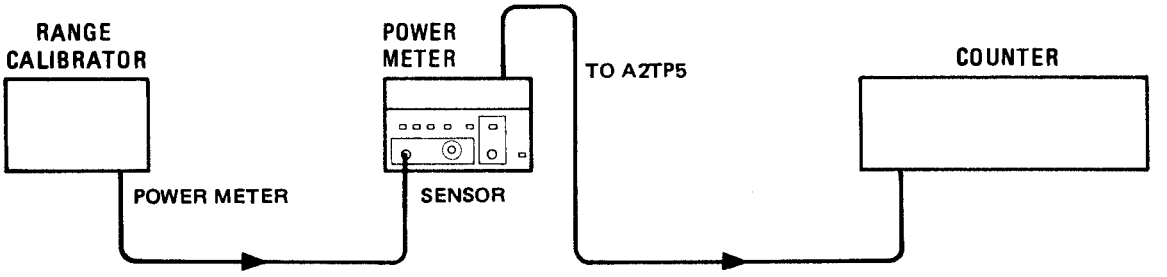

Figure 5-4. Multivibrator Adjustment Setup

EQUIPMENT:
Range Calibrator . . . . . HP 11683A
Counter . . . . . HP 5245L

PROCEDURE: 1. Set the Power Meter switches as follows:

CAL FACTOR % 100
POWER REF . . . . . off (out)
MODE . . . . . WATT
RANGE HOLD . . . . . off (out)
LINE . . . . . ON (in)

ADJUSTMENTS

5-19. MULTIVIBRATOR ADJUSTMENT (cont'd)

2. Set the Range Calibrator switches as follows:

   FUNCTION . . . . . CALIBRATE
   POLARITY . . . . . NORMAL
   LINE . . . . . ON (in)

3. Connect the equipment as shown in Figure 5-4.

4. Remove the Power Meter top cover, adjust FREQ potentiometer A2R69 to obtain maximum indication on the digital readout, and verify that the counter indicates 220 ± 16 Hz.

5. Perform the Instrument Accuracy Test described in Section IV to verify overall Power Meter accuracy. If all indications are obtained as specified, the adjustment is complete. If any indication cannot be obtained as specified, perform the A-D Converter and Linear Meter Adjustment.

5-20. A-D CONVERTER AND LINEAR METER ADJUSTMENT

REFERENCE: Service Sheets 7 and 8.

DESCRIPTION: The A-D converter circuit is adjusted to obtain the specified digital readout accuracy and the meter circuit is adjusted for a corresponding indication.

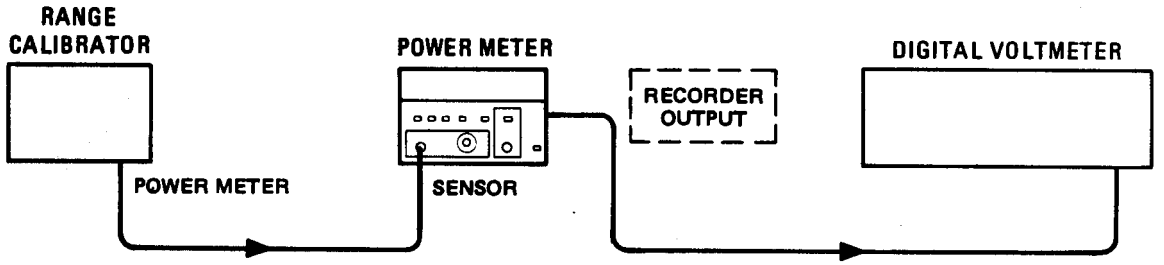

Figure 5-5. A-D Converter and Linear Meter Adjustment Setup

EQUIPMENT: Range Calibrator . . . . . HP 11683A
Digital Voltmeter (DVM). . . . HP 3490A

PROCEDURE: 1. Set the Power Meter switches as follows:

   CAL FACTOR %. 100
   POWER REF . . . . . off (out)
   MODE . . . . . WATT
   RANGE HOLD . . . . . off (out)
   LINE . . . . . ON (in)

5-20. A-D CONVERTER AND LINEAR METER ADJUSTMENT (cont'd)

2. Set the Range Calibrator switches as follows:

   FUNCTION . . . . . STANDBY
   RANGE . . . . . 1 mW
   POLARITY . . . . . NORMAL
   LINE . . . . . ON (in)

3. Connect the equipment as shown in Figure 5-5.

4. Remove the Power Meter top cover and set the DVM to the 1000 mV range.

5. Press the Power Meter SENSOR ZERO switch and wait for the display readout to stabilize. Then release the SENSOR ZERO switch and wait for ZERO led to go out before proceeding to the next step.

6. Set the Range Calibrator FUNCTION switch to CALIBRATE and adjust the Power Meter front-panel CAL ADJ control to obtain a 1.000 Vdc indication on the DVM.

7. Adjust the Power Meter LIN potentiometer A3R37 so that the digital readout indicates 1.000 mW.

8. Set the Power Meter MODE and RANGE HOLD switches to dBm and on (in), respectively.

NOTE

The next step sets the A-D log threshold. When the specified indication (-10.00 dBm) is obtained, the digital-readout should *be just on the verge of blanking, i.e., the readout may randomly alternate between -10.00 and UNDER RANGE, -1.*

9. Set the Range Calibrator RANGE switch to -10 dBm and adjust the power meter LZR, A3R59, for -10 dBm.

10. Set the Power Meter RANGE HOLD switch to off (out) and the Range Calibrator RANGE switch to 1 mW.

11. Adjust Power Meter LFS potentiometer A3R48 so that the digital readout indicates -0.00.

12. Set the Power Meter MODE switch to WATT and adjust MTR potentiometer A3R17 so that the pointer is aligned half way between the last two marks on the meter face.

ADJUSTMENTS

5-21. POWER REFERENCE OSCILLATOR FREQUENCY ADJUSTMENT

NOTE

Adjustment of the Power Reference Oscillator frequency may also affect the output level of the oscillator. Thus after the frequency is adjusted to 50.0 ± 0.5 MHz, the output level should be checked as described in Section IV. A procedure for adjusting the output to the specified level is provided in the next paragraph.

REFERENCE: Service Sheet 14.

DESCRIPTION: Variable inductor A8L1 is adjusted to set the power reference oscillator output frequency to 50.0 ± 0.5 MHz.

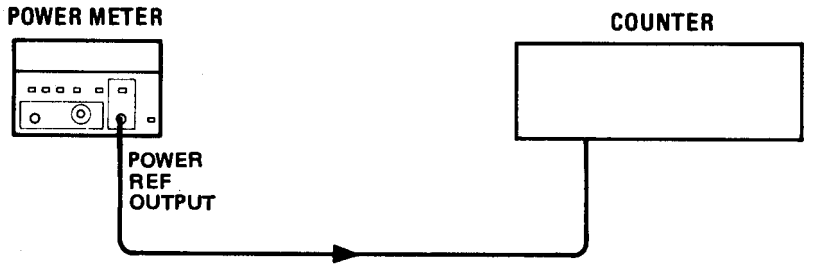

Figure 5-6. Power Reference Oscillator Frequency Adjustment Setup

EQUIPMENT: Counter . . . . . HP 5245L

PROCEDURE:

1. Set the Power Meter LINE switch to ON (in) and the POWER REF switch to off (out).

2. Set up the counter to measure frequency and connect the equipment as shown in Figure 5-6.

3. Set the Power Meter POWER REF switch to ON (in) and observe the indication on the counter. If it is 50.0 ± 0.5 MHz, no adjustment of the power reference oscillator frequency is necessary. If it is not within these limits, adjust the power reference oscillator frequency as described in steps 4 through 9.

4. Remove the Power Meter top cover.

CAUTION

Take care not to ground the +15V or -15V inputs to the power reference oscillator when performing the following steps. Grounding either of these inputs could damage the power reference oscillator, and/or the power supply.

5. Grasp the power reference oscillator assembly firmly, and remove the four screws which secure it to the Power Meter chassis.

ADJUSTMENTS

5-21. POWER REFERENCE OSCILLATOR FREQUENCY ADJUSTMENT (cont'd)

6. Tilt the power reference oscillator assembly to gain access to the circuit board underneath the metal cover, and adjust A8L1 to obtain a 50.00 ± 0.5 MHz indication on the counter.

7. Reposition the power reference oscillator on the Power Meter chassis but do not replace the mounting screws.

8. Observe the indication on the counter. If it is 50.0 ± 0.5 MHz, the adjustment procedure is complete. If it is not within these limits, repeat steps 6 and 7 except offset the power reference oscillator frequency as required to obtain a 50.0 ± 0.5 MHz indication on the counter when the power reference oscillator assembly is repositioned on the Power Meter chassis.

9. Replace the four screws which secure the power reference oscillator to the Power Meter chassis.

5-22. POWER REFERENCE OSCILLATOR LEVEL ADJUSTMENT

REFERENCE: Service Sheet 14.

DESCRIPTION: The power reference oscillator output is factory-adjusted to 1 mW ± 0.7% using a special measurement system accurate to 0.570 (traceable to the National Bureau of Standards) and allowing for a 0.2% transfer error. To ensure maximum accuracy in readjusting the power reference oscillator, the following procedure provides step-by-step instructions for using specified Hewlett-Packard instruments of known capability. If equivalent instruments are used, signal acquisition criteria may vary and reference should be made to the manufacturer's guidelines for operating the equipment.

NOTE

The Power Meter may be returned to the nearest HP office to have the power reference oscillator checked and/or adjusted. Refer to Section II, PACKAGING.

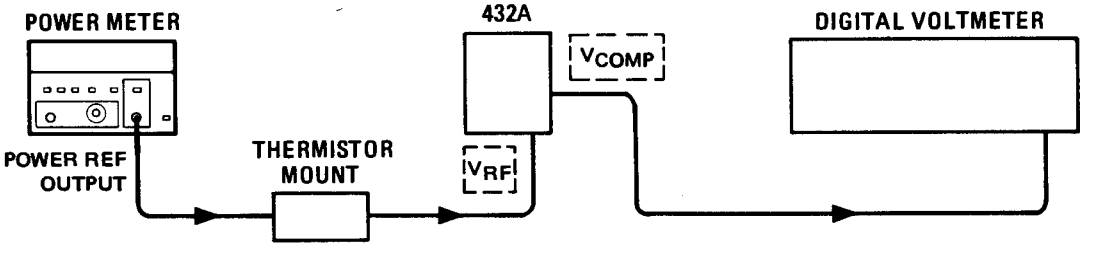

Figure 5-7. Power Reference Oscillator Level Adjustment Setup

EQUIPMENT:

Power Meter	HP 432A
Thermistor Mount	HP 478A-H75
Digital Voltmeter (DVM)	HP 3490A

ADJUSTMENTS

5-22. POWER REFERENCE OSCILLATOR LEVEL ADJUSTMENT (cont'd)

PROCEDURE:

1. Set up the DVM to measure resistance and connect the DVM between the V_{RF} connector on the rear panel of the 432A and pin 1 on the thermistor mount end of the 432A interconnect cable.

2. Round off the DVM indication to two decimal places and record this value as the internal bridge resistance (R) of the 432A (approximately 200 ohms).

3. Connect the 432A to the Power Meter as shown in Figure 5-7.

4. Set the Power Meter LINE switch to ON (in) and the POWER REF switch to off (out). Then wait thirty minutes for the 432A thermistor mount to stabilize before proceeding to the next step.

5. Set the 432A RANGE switch to COARSE ZERO and adjust the front-panel COARSE ZERO control to obtain a zero meter indication.

6. Fine zero the 432A on the most sensitive range, then set the 432A RANGE switch to 1 mW.

NOTE

Ensure that the DVM input leads are isolated from chassis ground when performing the next step.

7. Set up the DVM to measure microvolt and connect the positive and negative inputs leads, respectively, to the V_{COMP} and V_{RF} connectors on the rear panel of the 432A.

8. Observe the indication on the DVM. If less than 400 microvolt, proceed to the next step. If 400 microvolt or greater, press and hold the 432A FINE ZERO switch and adjust the COARSE ZERO control so that the DVM indicates 200 microvolt or less. Then release the FINE ZERO switch and proceed to the next step.

9. Round off the DVM indication to the nearest microvolt and record this value as V_0.

10, Disconnect the DVM negative input lead from the V_{RF} connector on the 432A and reconnect it to chassis ground.

11. Set the Power Meter POWER REF switch to ON (in) and record the indication observed on the DVM as V_{COMP}.

12. Disconnect the DVM negative input lead from chassis ground and reconnect it to the V_{RF} connector on the rear panel of the 432A. The DVM is not setup to measure V_1 which represents the power reference oscillator output level.

13. Calculate the value of V_1 equal to 1 milliwatt from the following equation:

5-22. POWER REFERENCE OSCILLATOR LEVEL ADJUSTMENT (cont'd)

$$V_1 - V_0 = V_{COMP} - \sqrt{(V_{COMP})^2 - (10^{-3})(4R)(\text{EFFECTIVE EFFICIENCY})}$$

where:

V_0 = previously recorded value

v_{COMP} = previously recorded value

10^{-3} = 1 milliwatt

R = previously recorded value

EFFECTIVE EFFICIENCY = value for thermistor mount at 50 MHz (traceable to the National Bureau of Standards).

14. Remove the Power Meter top cover and adjust LEVEL ADJUST potentiometer A8R4 so that the DVM indicates the calculated value of V_1.

TYPICAL CALCULATIONS:

1. ACCURACY:

DVM Measurements:	(V_{COMP})	±0.018%
(HP 3490A -90 days, 23°C ±5°C)	($v_1 - V_0$)	±0.023%
	(R)	±0.03%
Math Assumptions:		±0.01%
EFFECTIVE EFFICIENCY CAL (NBS):		±0.5%
MISMATCH UNCERTAINTY: (Source & Mount SWR ⩽ 1.05)		±0.1%
		⩽ ±0.7%

2. MATH ASSUMPTIONS:

$$P_{RF} = \frac{2V_{COMP}(V_1 - V_0) + V_0^2 - V_1^2}{(4R)(\text{EFFECTIVE EFFICIENCY})}$$

Assume: $v_0^2 - V_1^2 = (V_1 - V_0)^2$

$-(V_1 - V_0)2 = -V_1^2 + 2V_1 - V_0^2$

Want: $V_0^2 - V_1^2$

$$\therefore \text{error} = (V_1^2 + 2V_1V_0 - V_0^2) - (V_0^2 - V_1^2) = -2V_0^2 + 2V_1V_0 = 2V_0(V_1 - V_0)$$

if $2V_0(V_1 - V_0) << 2V_{COMP}(V_1 - V_0)$ i.e., $V_0 << V_{COMP}$, error is negligible.

$v_{COMP} \sim 4$ volts. If $V_0 < 400\ \mu V$, error is < 0.01%.

(typically V_0 can be set to < 50 μV).

ADJUSTMENTS

5-22. POWER REFERENCE OSCILLATOR LEVEL ADJUSTMENT (cont'd)

TYPICAL CALCULATIONS (cont'd)

3. Derivation of Formula for $V_1 - V_0$

$$P_{RF} = \frac{2V_{COMP}(V_1 - V_0) + V_0^2 - V_1^2}{(4R)(\text{EFFECTIVE EFFICIENCY})}$$

Desired $P_{RF} = 1\text{mmW} = 10^{-3}$

$$10^{-3} = \frac{2V_{COMP}(V_1 - V_0) + V_0^2 - V_1^2}{(4R)(\text{EFFECTIVE EFFICIENCY})}$$

Let (4R) (EFFECTIVE EFFICIENCY) $(10^{-3}) = K$

Substitute $-(V_1 - V_0)^2$ for $V_0^2 - V_1^2$ (see Math Assumptions under Accuracy)

Then $0 = (V_1 - V_O)^2 - 2V_{COMP}(V_1 - V_0) + K$

$$\text{or } V_1 - V_0 = V_{COMP} - \sqrt{(V_{COMP})^2 - K}$$

SECTION VI
REPLACEABLE PARTS

6-1. INTRODUCTION

6-2. This section contains information for ordering parts. Table 6-1 lists abbreviations used in the parts list and throughout the manual. Table 6-2 lists all replaceable parts in reference designation order. Table 6-3 contains the names and addresses that correspond with the manufacturers' code numbers.

6-3. ABBREVIATIONS

6-4. Table 6-1 lists abbreviations used in the parts list, schematics and throughout the manual. In some cases, two forms of the abbreviation are used, one all in capital letters, and one partial or no capitals. This occurs because the abbreviations in the parts list are always all capitals. However, in the schematics and other parts of the manual, other abbreviation forms are used with both lower case and upper case letters.

6-5. REPLACEABLE PARTS LIST

6-6. Table 6-2 is the list of replaceable parts and is organized as follows:

a. Electrical assemblies and their components in alpha-numerical order by reference designation.

b. Chassis-mounted parts in alpha-numerical order by reference designation.

c. Miscellaneous parts.

The information given for each part consists of the following:

a. The Hewlett-Packard part number.

b. The total quantity (Qty) used in the instrument.

c. The description of the part.

d. A typical manufacturer of the part in a five-digit code.

e. The manufacturer's number for the part.

The total quantity for each part is given only once at the first appearance of the part number in the list.

6-7. ORDERING INFORMATION

6-8. To order a part listed in the replaceable parts table, quote the Hewlett-Packard part number, indicate the quantity required, and address the order to the nearest Hewlett-Packard office.

6-9. To order a part that is not listed in the replaceable parts table, include the instrument model number, instrument serial number, the description and function of the part, and the number of parts required. Address the order to the nearest Hewlett-Packard office.

6-10. PARTS PROVISIONING

6-11. Stocking spare parts for an instrument is often done to ensure quick return to service after a malfunction occurs. Hewlett-Packard has a Spare Parts Kit available for this purpose. The kit consists of selected replaceable assemblies and components for this instrument. The contents of the kit and the Recommended Spares list are based on failure reports and repair data, and parts support for one year. A complimentary Recommended Spares list for this instrument may be obtained on request and the Spare Parts Kit may be ordered through your nearest Hewlett-Packard office.

6-12. DIRECT MAIL ORDER SYSTEM

6-13. Within the USA, Hewlett-Packard can supply parts through a direct mail order system. Advantages of using the system are:

a. Direct ordering and shipment from the HP Parts Center in Mountain View, California.

b. No maximum or minimum on any mail order (there is a minimum order amount for parts ordered through a local HP office when the orders require billing and invoicing).

c. Prepaid transportation (there is a small handling charge for each order).

d. No invoices - to provide these advantages, a check or money order must accompany each order.

6-14. Mail order forms and specific ordering information is available through your local HP office. Addresses and phone numbers are located at the back of this manual.

Table 6-1. Reference Designations and Abbreviations (1 of 2)

REFERENCE DESIGNATIONS

A . . . . . assembly
AT . . attenuator; isolator; termination
B . . . . . fan; motor
BT . . . . . battery
C . . . . . capacitor
CP . . . . . coupler
CR . . . . . diode; diode thyristor; varactor
DC . . . directional coupler
DL . . . . . delay line
DS . . . . . annunciator; signaling device (audible or visual); lamp; LED
E . . . . . miscellaneous electrical part
F . . . . . fuse
FL . . . . . filter
H . . . . . hardware
HY . . . . . circulator
J . . . electrical connector (stationary portion); jack
K . . . . . relay
L . . . . . coil; inductor
M . . . . . meter
MP . . . . . miscellaneous mechanical part
P . . . electrical connector (movable portion); plug
Q . . . . . transistor: SCR; triode thyristor
R . . . . . *resistor*
RT . . . . . thermistor
S . . . . . switch
T . . . . . transformer
TB . . . . . terminal board
TC . . . . . thermocouple
TP . . . . . test point
U . . . . . integrated circuit; microcircuit
V . . . . . electron tube
VR . . . . voltage regulator; breakdown diode
W . . . . cable; transmission path; wire
X . . . . . socket
Y . . . . crystal unit (piezoelectric or quartz)
Z . . . . tuned cavity; tuned circuit

ABBREVIATIONS

A . . . . . ampere
ac . . . . alternating current
ACCESS . . . . . accessory
ADJ . . . . . adjustment
A/D . . . . analog-to-digital
AF . . . . . audio frequency
AFC . . . . . automatic frequency control
AGC . . . . . automatic gain control
AL . . . . . aluminum
ALC . . . . . automatic level control
AM . . . amplitude modulation
AMPL . . . . . amplifier
APC . . . . automatic phase control
ASSY . . . . . assembly
AUX . . . . . auxiliary
avg . . . . . average
AWG . . . . American wire gauge
BAL . . . . . balance
BCD . . . . . binary coded decimal
BD . . . . . board
BE CU . . . . . beryllium copper
BFO . . . . . beat frequency oscillator
BH . . . . . binder head
BKDN . . . . . breakdown
BP . . . . . bandpass
BPF . . . . . bandpass filter
BRS . . . . . brass
BWO . . . . . backward-wave oscillator
CAL . . . . . calibrate
ccw . . counter-clockwise
CER . . . . . ceramic
CHAN . . . . . channel
cm . . . . . centimeter
CMO . . cabinet mount only
COAX . . . . . coaxial
COEF . . . . . coefficient
COM . . . . . common
COMP . . . . . composition
COMPL . . . . . complete
CONN . . . . . connector
CP . . . . . cadmium plate
CRT . . . cathode-ray tube
CTL . . . . complementary transistor logic
CW . . . . . continuous wave
cw . . . . . clockwise
cm . . . . . centimeter
D/A . . . . digital-to-analog
dB . . . . . decibel
dBm . . . . decibel referred to 1 mW
dc . . . . . direct current
deg . . degree (temperature interval or difference)
° . . . . . degree (plane angle)
°C . . . . . degree Celsius (centigrade)
°F . . . . degree Fahrenheit
°K . . . . . degree Kelvin
DEPC . . deposited carbon
DET . . . . . detector
diam . . . . . diameter
DIA . . . diameter (used in parts list)
DIFF AMPL . . differential amplifier
div . . . . . division
DPDT . . . . . double-pole, double-throw
DR . . . . . drive
DSB . . . . double sideband
DTL . . . . diode transistor logic
DVM . . . digital voltmeter
ECL . . . . emitter coupled logic
EMF . . electromotive force
EDP . . . . . electronic data processing
ELECT . . . . . electrolytic
ENCAP . . . . encapsulated
EXT . . . . . external
F . . . . . *farad*
FET . . . . . field-effect transistor
F/F . . . . . flip-flop
FH . . . . . flat head
FIL H . . . . . fillister head
FM . . frequency modulation
FP . . . . . front panel
FREQ . . . . . frequency
FXD . . . . . fixed
g . . . . . gram
GE . . . . . germanium
GHz . . . . . gigahertz
GL . . . . . glass
GRD . . . . . ground(ed)
H . . . . . henry
h . . . . . hour
HET . . . . . heterodyne
HEX . . . . . hexagonal
HD . . . . . head
HDW . . . . . hardware
HF . . . . . high frequency
HG . . . . . mercury
HI . . . . . high
HP . . . . . Hewlett-Packard
HPF . . . . . high pass filter
HR . . . . . hour (used in parts list)
HV . . . . . high voltage
Hz . . . . . Hertz
IC . . . . integrated circuit
ID . . . . . inside diameter
IF . . . . . intermediate frequency
IMPG . . . . . impregnated
in . . . . . inch
INCD . . . . . incandescent
INCL . . . . . 'nclude(s)
INP . . . . . input
INS . . . . . insulation
INT . . . . . internal
kg . . . . . kilogram
kHz . . . . . kilohertz
kΩ . . . . . kilohm
kV . . . . . kilovolt
lb . . . . . pound
LC . . . . . inductance-capacitance
LED . . light-emitting diode
LF . . . . . low frequency
LG . . . . . long
LH . . . . . left hand
LIM . . . . . limit
LIN . . . linear taper (used in parts list)
lin . . . . . linear
LK WASH . . . lock washer
LO . . . low; local oscillator
LOG . . . . logarithmic taper (used in parts list)
log . . . . . logrithm(ic)
LPF . . . . . low pass filter
LV . . . . . low voltage
m . . . . . meter (distance)
mA . . . . . milliampere
MAX . . . . . *maximum*
MΩ . . . . . megohm
MEG . . . . meg (10^6) (used in parts list)
MET FLM . . . . metal film
MET OX . . metallic oxide
MF . . . medium frequency; microfarad (used in parts list)
MFR . . . . . manufacturer
mg . . . . . milligram
MHz . . . . . megahertz
mH . . . . . millihenry
mho . . . . . mho
MIN . . . . . minimum
min . . . . . minute (time)
. . . ' . . . . . minute (plane angle)
MINAT . . . . . miniature
mm . . . . . millimeter

NOTE

All abbreviations in the parts list will be in upper-case.

Table 6-1. Reference Designations and Abbreviations (2 of 2)

MOD . . . . . modulator
MOM . . . . . momentary
MOS . . . . . metal-oxide semiconductor
ms . . . . . millisecond
MTG . . . . . mounting
MTR . . . meter (indicating device)
mV . . . . . millivolt
mVac . . . . . millivolt, ac
mVdc . . . . . millivolt, dc
mVpk . . . . millivolt, peak
mVp-p . . . millivolt, peak-to-peak
mVrms . . . . millivolt, rms
mW . . . . . milliwatt
MUX . . . . . multiplex
MY . . . . . mylar
μA . . . . . microampere
μF . . . . . microfarad
μH . . . . . microhenry
μmho . . . . . micromho
μs . . . . . microsecond
μV . . . . . microvolt
μVac . . . . . microvolt, ac
μVdc . . . . . microvolt, dc
μVpk . . . microvolt, peak
μVp-p . . . microvolt, peak-to-peak
μVrms . . . . microvolt, rms
μW . . . . . microwatt
nA . . . . . nanoampere
NC . . . . . no connection
N/C . . . . normally closed
NE . . . . . neon
NEG . . . . . negative
nF . . . . . nanofarad
NI PL . . . . . nickel plate
N/O . . . . . normally open
NOM . . . . . nominal
NORM . . . . . normal
NPN . . . negative-positive-negative
NPO . . . . negative-positive zero (zero temperature coefficient)
NRFR . . not recommended for field replacement
NSR . . . . . not separately replaceable
ns . . . . . nanosecond
nW . . . . . nano watt
OBD . . . order by description
OD . . . . . outside diameter
OH . . . . . oval head
OP AMPL . . . operational amplifier
OPT . . . . . option
OSC . . . . . oscillator
OX . . . . . oxide
oz . . . . . ounce
Ω . . . . . ohm
P . . . . peak (used in parts list)
PAM . . . . pulse-amplitude modulation
PC . . . . . printed circuit
PCM . . pulse-code modulation; pulse-count modulation
PDM . . . . . pulse-duration modulation
pF . . . . . picofarad
PH BRZ phosphor bronze
PHL . . . . . Phillips
PIN . . . positive-intrinsic-negative
PIV . . . . . peak inverse voltage
pk . . . . . peak
PL . . . . . phase lock
PLO . . . . . phase lock oscillator
PM . . . . phase modulation
PNP . . . positive-negative-positive
P/O . . . . . part of
POLY . . . . . polystyrene
PORC . . . . . porcelain
POS . positive; position(s) (used in parts list)
POSN . . . . . position
POT . . . . . potentiometer
p-p . . . . . peak-to-peak
PP . . peak-to-peak (used in parts list)
PPM . . . . . pulse-position modulation
PREAMPL . . preamplifier
PRF . . . . pulse-repetition frequency
PRR . . . . pulse repetition rate
ps . . . . . picosecond
PT . . . . . point
PTM . . . . . pulse-time modulation
PWM . . . . . pulse-width
PWV . . . . . peak working voltage
RC . . . . . resistance-capacitance
RECT . . . . . rectifier
REF . . . . . reference
REG . . . . . regulated
REPL . . . . . replaceable
RF . . . . . radio frequency
RFI . . . . radio frequency interference
RH . . . round head; right hand
RLC . . . . . resistance-inductance-capacitance
RMO . . . rack mount only
rms . . . . root-mean-square
RND . . . . . round
ROM . read-only memory
R&P . . . . . rack and panel
RWV . . . reverse working voltage
S . . . scattering parameter
s . . . . . second (time)
. . . " . second (plane angle)
S-B . . . . . slow-blow (fuse) (used in parts list)
SCR . . . silicon controlled rectifier; screw
SE . . . . . selenium
SECT . . . . . sections
SEMICON . . . semiconductor
SHF . . . . . superhigh frequency
SI . . . . . silicon
SIL . . . . . silver
SL . . . . . slide
SNR . . signal-to-noise ratio
SPDT . . . . . single-pole, double-throw
SPG . . . . . spring
SR . . . . . split ring
SPST . . . . . single-pole, single-throw
SSB . . . . . single sideband
SST . . . . . stainless steel
STL . . . . . steel
SQ . . . . . square
SWR . standing-wave ratio
SYNC . . . . . synchronize
T . . timed (slow-blow fuse)
TA . . . . . tantalum
TC . . . . . temperature compensating
TD . . . . . time delay
TERM . . . . . terminal
TFT . . thin-film transistor
TGL . . . . . toggle
THD . . . . . thread
THRU . . . . . through
TI . . . . . titanium
TOL . . . . . tolerance
TRIM . . . . . trimmer
TSTR . . . . . transistor
TTL . transistor-transistor logic
TV . . . . . television
TVI television interference
TWT . . traveling wave tube
U . . . . . micro (10^{-6}) (used in parts list)
UF . . . microfarad (used in parts list)
UHF . . ultrahigh frequency
UNREG . . . . unregulated
V . . . . . volt
VA . . . . . voltampere
Vac . . . . . volts, ac
VAR . . . . . variable
VCO . . . voltage-controlled oscillator
Vdc . . . . . volts, dc
VDCW . . volts, dc, working (used in parts list)
V(F) . . . . . volts, filtered
VFO . . variable-frequency oscillator
VHF . . . . . very-high frequency
Vpk . . . . . volts, peak
Vp-p . volts, peak-to-peak
Vrms . . . . volts, rms
VSWR . . . voltage standing wave ratio
VTO . . . . . voltage-tuned oscillator
VTVM . . . . vacuum-tube voltmeter
V(X) . . . . . volts, switched
W . . . . . watt
W/ . . . . . with
WI V . . . . working inverse voltage
WW . . . . . wirewound
W/O . . . . . without
YIG . . yttrium-iron-garnet
Z_o . . . . . characteristic impedance

NOTE

All abbreviations in the parts list will be in upper-case.

MULTIPLIERS

Abbreviation	Prefix	Multiple
T	tera	10^{12}
G	giga	10^{9}
M	mega	10^{6}
k	kilo	10^{3}
da	deka	10
d	deci	10^{-1}
c	centi	10^{-2}
m	milli	10^{-3}
μ	micro	10^{-6}
n	nano	10^{-9}
p	pico	10^{-12}
f	femto	10^{-15}
a	atto	10^{-18}

TABLE 6-2. REPLACEABLE PARTS

REFERENCE DESIGNATION	HP PART NUMBER	QTY	DESCRIPTION	MFR CODE	MFR PART NUMBER
A1	00436-60020	1	FRONT PANEL ASSEMBLY	28480	00436-60020
A1M1	1120-0584	1	METER	28480	1120-0584
A1U1	1820-1361	1	IC DGTL DECORER	C7263	9374DC
A1U2	1820-1361		IC DGTL DECODER	07263	9374DC
A1U3	1820-1361		IC DGTL DECODER	0763	9374DC
A1U4	1820-1361		IC DGTL DECODER	07263	9374DC
A1U5			NOT ASSIGNED		
A1U6	1990-0434	5	DISPLAY NUM SEG 1 CHAR .3 IN HIGH	28480	1990-0434
A1U7	1990-0434		DISPLAY NUM SEG 1 CHAR .3 IN HIGH	28480	1990-0434
A1U8	1990-0434		DISPLAY NUM SEG 1 CHAR .3 IN HIGH	28480	1990-0434
A1U9	1990-0434		DISPLAY NUM SEG 1 CHAR .3 IN HIGH	28480	1990-0434
A1U10	1990-0434		DISPLAY NUM SEG 1 CHAR .3 IN HIGH	28480	1990-0434
		1	A1 MISCELLANEOUS		
	0370-0914	7	BEZEL: PUSHBUTTON KNOB, JADE GREY	28480	0370-0914
	1460-0553	2	CLIP, WINDOW	91260	
A1A1	00436-60007	1	DISPLAY ASSEMBLY	28480	00436-60007
A1A1C1	0180-0197	5	CPACITOR-FXD; 2.2UF=-10% 20VDC TA	56289	150D225X9020A2
A1A1C2	0180-0228	1	CAPCITOR-FXD; 22UF+-10% 15VDC TA-SOLID	56289	150D226X9015B2
A1A1CR1	1901-0518	6	DIODE-SCHOTTKY	28480	1901-0518
A1A1CR2	1901-0518		DIODE-SCHOTTKY	28480	1901-0518
A1A1DS1	1990-0450	10	LED-VISIBLE	28480	1990-0450
A1A1DS2	1990-0450		LED-VISIBLE	28480	1990-0450
A1A1DS3	1990-0450		LED-VISIBLE	28480	1990-0450
A1A1DS4	1990-0450		LED-VISIBLE	28480	1990-0450
A1A1DS5	1990-0450		LED-VISIBLE	28480	1990-0450
A1A1DS6	1990-0450		LED-VISIBLE	28480	1990-0450
A1A1DS7	1990-0450		LED-VISIBLE	28480	1990-0450
A1A1DS8	1990-0450		LED-VISIBLE	28480	1990-0450
A1A1DS9	1990-0450		LED-VISIBLE	28480	1990-0450
A1A1DS10	1990-0450		LED-VISIBLE	28480	1990-0450
A1A1J1	1251-3944	1	CONNECTOR, 5-PIN		
A1A1J2	1200-0473	6	SOCKET; ELEC; 16-CONT KIP SLDR TERM	28480	1200-0473
A1A1J3	1200-0473		SOCKET; ELECT; IC 16-CONT DIP SLDR TERM	28480	1200-0473
A1A1Q1	1853-0020	20	TRANSISTOR PNP SI CHIP PD-300MW	28480	1853-0020
A1A1R1	1810-0151	12	NETWORK-RES RK-IN SIP	28480	1810-0151
A1A1R2	0757-0401	7	RESISTOR 100 OHM 1% .125W F TUBULAR	24546	C4-1/8-TO-101-F
A1A1R3	0698-3441	9	RESISTOR 215 1% .125W F TUBULAR	16299	C4-1/8-TO-215R-F
A1A1R4	0698-3441		RESISTOR 215 OHM 1% .125W F TUBULAR	16299	C4-1/8-TO-215R-F
A1A1R5	0698-3441		RESISTOR 215 OHM 1% .125W F TUBULAR	16299	C4-1/8-TO-215R-F
A1A1R6	0698-3441		RESISTOR 215 OHM 1% .125W F TUBULALR	16299	C4-1/8-TO-215R-F
A1A1R7	0698-3441		RESISTOR 215 OHM 1% .125W F TUBULAR	16299	C4-1/8-TO-215R-F
A1A1U1			NOT ASSIGNED		
A1A1U2			NOT ASSIGNED		
A1A1U3			NOT ASSIGNED		
A1A1U4			NOT ASSIGNED		
A1A1U5	1820-0174	2	IC DGTL SN74 04 N INVERTER	01295	SN7404N
			A1A1 MISCELLANEOUS		
A1A1XU1	1200-0473		SOCKET; ELEC; IC 16-CONT DIP SLDR TERM	28480	1200-0473
A1A1XU2	1200-0473		SCCKFT; ELEC; IC 16-CONT DIP SLDR TERM	28480	1200-0473
A1A1XU3	1200-0473		SLOCKET; ELEC; IC 16-CONT DIP SLDR TERM	28480	1200-0473
A1A1XU4	1200-0473		SOCKET; ELEC; IC 16-CONT DIP SLDR TERM	28480	1200-0473
A1A1XU5			NOT ASSIGNED		
A1A1XU6	1200-0508	7	SOCKET; ELEC; IC 14-CONT DIP SLDR TERM	06776	1CN-143-S3W
A1A1XU7	1200-0508	7	SOCKET; ELEC; IC 14-CONT DIP SLDR TERM	06776	ICN-143-S3W
A1A1XU8	1200-0508		SOCKET; ELEC; IC 14-CONT DIP SLDR TERM	06776	ICN-143-S3W
A1A1XU9	1200-0508		SOCKET; ELEC; IC 14-CONT DIP SLDR TERM	06776	ICN-143-S3W
A1A1XU10	1200-0508		SOCKET; ELEC; IC 14-CONT DIP SLDR TERM	06776	ICN-143-S3W
	0520-0128	14	SCREW-MACH 2-56 PAN HD POZI REC SST-300	28480	0520-0128
	2190-0045	14	WASHER-LK HLCL NO. 2 .088 IN ID .165 IN	76854	1501-009
	3050-0079	3	WASHER-FL NM NO. 2 .094 IN ID .188 IN OD	23050	2
	3050-0098	5	WASHER-FL MTLC NO. 2 .094 IN ID .25 IN	80120	AN960 C2
A1A2	00436-60008	1	PUSHBUTTON SWITC ASSEMBLY	28480	00436-60008
A1A2J1	1200-0508		SICKET; ELEC; IC 14-CONT DIP SLDR TERM	06776	ICN-143-S3W
A1A2R1	0757-0438	7	RESISTOR 5.11K 1% .125W F TUBULAR	24546	C4-1/8-TO-5111-F
A1A2R2	0757-0442	28	RESISTOR 10K 1% .125W F TUBULAR	24546	C4-1/8-TO-1002-F
A1A2R3	0757-0442		RESISTOR 10K 1% .125W F TUBULAR	24546	C4-1/8-TO-1002-F
A1A2R4	0757-0442		RESISTOR 10K 1% .125W F TUBULAR	24546	C4-1/8-TO-1002-F

TABLE 6-2. REPLACEABLE PARTS

REFERENCE DESIGNATION	HP PART NUMBER	QTY	DESCRIPTION	MFR CODE	MFR PART NUMBER
A1A2S1	3101-1901	1	SWITCH, PUSHBUTTON 9-STATION	28480	3101-1901
A1A2U1	1820-0175	2	IC DGTL SN74 05 N INVERTER	01295	SN7405N
			A1A2 MISCELLANEOUS		
	0370-2486	6	PUSHBUTTON (SOLID GRAY)	28480	0370-2486
	0520-0128		SCEW-MACH 2-56 PN HD POZI REC SST-300	28480	0520-0128
	2190-0045		WASHER-LK HL CL NO. 2 .088 IN ID .165 IN	76854	1501-009
A1A3	00436-60027	1	CAL FACTOR SWITCH ASSEMBLY	28480	00436-60027
A1A3R1	0757-0346	15	RESISTOR 10 OHM 1% .125W F TUBULAR	24546	C4-1/8-TO-10R0-F
A1A3R2	0757-0346		RESISTOR 10 OHM 1% .125W F TUBULAR	24546	C4-1/8-TO-10R0-F
A1A3R3	0757-0346		REISTOR 10 OHM 1% .125W F TUBULAR	24546	C4-1/8-TO-10R0-F
A1A3R4	0757-0346		RESISTOR 10 OHM 1% .125W F TUBULAR	24546	C4-1/8-TO-10R0-F
A1A3R5	0757-0346		RESISTOR 10 OHM 1% .125W F TUBULAR	24546	C4-1/8-TO-10R0-F
A1A3R6	0757-0346		RESISTOR 10 OHM 1% .125W F TUBULAR	24546	C4-1/8-TO-10R0-F
A1A3R7	0757-0346		RESISTOR 10 OHM 1& .125W F TUBULAR	24546	C44-1/8-TO-1ORO-F
A1A3R8	0757-0346		RESISTOR 10 OHM 1% .125W F TUBULAR	24546	C4-1/3-TO-10R0-F
A1A3R9	0757-0346		RESISTOR 10 OHM 1% .125W F TUBULAR	24546	C4-1/8-TO-10R0-F
A1A3R10	0757-0346		RESISTOR 10OHM 1% .125W F TUBULAR	24546	C4-1/8-TO-10R0-F
A1A3R11	0757-0346		RESISTOR 10 OHM 1% .125W F TUBULAR	24546	C4-1/8-TO-10R0-F
A1A3R12	0757-0346		RESISTOR 10 OHM 1% .125W F TUBULAR	24546	C4-1/8-TO-10R0-F
A1A3R13	0757-0346		RESISTOR 10OHM 1% .125W F TUBULAR	24546	C4-1/8-TO-10R0-F
A1A3R14	0757-0346		RESISTOR 10 OHM 1% .125W F TUBULAR	24546	C4-1/8-TO-10R0-F
A1A3R15	0757-0346		RESISTOR 10 OHM 1% .125W F TUBULAR	24546	C4-1/8-TO-10R0-F
A1A3R16	2100-0600	1	RESISTOR-VAR TRMR 5KOHM 10% C SIDE ADJ	32997	3059J-1-502M
A1A3S1	3100-3318	1	SWITCH, ROTARY	28480	3100-3318
			A1A3 MISCELLANEOUS		
	0370-2774	1	KNOB, CAL FACTOR	28480	0370-2774
	2190-0016	3	WASHER-LK INTL T .377 IN ID .507 IN OD	78189	1920-02
	2950-0043	1	NUT-HEX-DBL CHAM 3/8-32-THD .094-THK	73743	2X 28200
	3050-0032	1	WASHER-FL MTLC NO. 10 .189 IN ID .312 IN	28480	3050-0032
	3050-0253	1	WASHER-SPR CRVD .195 IN ID .307 IN OD	78189	3502-10-250-2541
A2	00436-60001	1	AC GAIN ASSEMBLY	28480	00436-60001
A2C1	0180-1746	8	CAPACITOR-FXD; 15UF+-10% 20VDC TA-SOLID	56289	150D156X9020B2
A2C2	0180-1746		CAPACITOR-FXD; 15UF+-10% 20VDC TA-SOLID	56289	150D156X9020B2
A2C3	0180-2206	3	CAPACITOR-FXD; 60UF+-10% 6VDC TA-SOLID	56289	150D606X9006B2
A2C4	0180-0229	2	CAPACITOR-FXD; 33UF+-10% 10VDC TA-SOLID	56289	150D336X9010B2
A2C5	0160-0160	4	CAPACITOR-FXD; 820PF +-10% 200WVDC POLYE	56289	292P82292
A2C6	0180-2206		CAPACITOR-FXD; 60UF+-10% 6VDC TA-SOLID	56289	150D606X9006B2
A2C7	0180-0197		CAPACITOR-FXD; 2.2UF+-10% 20VDC TA	56289	150D225X9020A2
A2C8	0160-2290	5	CAPACITOR-FXD .15UF +-10% 80WVDC POLYE	56289	292P1549R8
S2V9	0160-2199	1	CAPACITORPFXD 30PF +-5% 300WVDC MICA	28480	0160-2199
A2C10	0160-0160		CAPACITOR-FXD 8200PF +10% 200WVDC POLYE	56289	292P82292
A2C11	0160-2290		CAPACITOR-FXD .15UF +-10% 80WVDC PLYE	56289	292P1549R8
A2C12	0160-0160		CAPACITOR-FXD 8200PF +-10% 200WVDC POLYE	56289	292P82292
A2C13	0160-2290		CAPACITOR-FXD .15UF -10% 80WVDC POLYE	56289	292P1549R8
A2C14	0160-0160		CAPACITOR-FXD 8200OF +-10% 200WVDC POYE	56289	292P82292
A2C15	0180-1746		CAPACITOR-FXD; 15UF+-10% 20VDC TA-SOLID	56289	150D156X9020B2
A2C16	0160-2055	11	CAPACITOR-FXD .01UF +80-20% 100WVDC CER	28480	0160-2055
A2C17	0160-2261	1	CAPACITOR-FXD 15PF +-5% 500WVDC CER 0+	28480	0160-2261
A2C18	0180-0229		CAPACITOR-FXD; 33UF+10% 10VDC TA-SOLID	56289	150D336X9010B2
A2C19	0160-0164	2	CAPACITOR-FXD .039UF +-10% 200WVDC POYE	56289	292P39392
A2C20	0160-0164		CAPACITOR-FXD .039UF +-10% 200WVDC POLYE	56289	292P39392
A2CR1	1901-0518		DIODE4-SCHOTKY	28480	1901-0518
A2CR2	1901-0518		SIODE-SCHOTTKY	28480	1901-0518
A2CR3	1901-0040	7	DIODE-SWITCHING 2NS 30V 50MA	28480	1901-0040
A2Q1	1854-0003	1	TRANSISTOR NPN SI TO-39 PD=800MW	28480	1854-0003
A2Q2	1855-0414	21	TRANSISTOR; J-FET N-CHAN, D-MODE SI	17856	2N4393
A2Q3	1855-0414		TRANSISTOR; J-FET N-CHAN, D-MODE SI	17856	2N4393
A2Q4	1854-0071	28	TRANSISTOR NPN SI PD=300MW FT=200MHZ	28480	1854-0071
A2Q5	1854-0071		TRANSISTOR NPN SI KKPD=300MW FT=200MHZ	28480	1854-0071
A2Q6	1854-0071		TRANSISTOR NPN SI KPD=300 FT=200MHZ	28480	1854-0071
A2Q7	1854-0071		TRANSISTOR NPN SI PD=300 FT=200MHZ	28480	1854-0071
A2Q8	1854-0071		TRANSISTOR NPN SI PD=300 FT=200MHZ	28480	1854-0071
A2Q9	1855-0414		TRANSISTOR; J-FET N-CHAN, D-MODE SI	17856	2N4393
A2Q10	1855-0414		TRANSISTOR; J-FET N-CHAN, D-MODE SI	17856	2N4393
A2Q11	1855-0414		TRANSISTOR; J-FET N-CHAN, D-MODE SI	17856	2N4393
A2Q12	1855-0414		TRANSISTOR; J-FET N-CHAN, D-MODE SI	17856	2N4393
A2Q13	1854-0071		TRANSISTOR NPN SI PD=300MW FT=200MHZ	28480	1854-0071
A2Q14	1853-0020		TRANSISTOR PNP SI CHIP PD=300MW	28480	1853-0020
A2Q15			NOT ASSIGNED		

TABLE 6-2. REPLACEABLE PARTS

REFERENCE DESIGNATION	HP PART NUMBER	QTY	DESCRIPTION	MFR CODE	MFR PART NUMBER
A2Q16	1854-0071		TRANSISTOR NPN SI PD=300MW FT=200MHZ	28480	1854-0071
A2Q17	1854-0071		TRANSISTOR NPN SI PD=300MW FT=200MHZ	28480	1854-0071
A2Q18	1854-0071		TRANSISTOR NPN SI PD=300MW FT=200MHZ	28480	1854-0071
A2Q19	1853-0020		TRANSISTOR PNP SI CHIP PD=300MW	28480	1853-0020
A2Q20	1853-0020		TRANSISTOR PNP SI CHIP PD=300MW	28480	1853-0020
A2Q21	1853-0020		TRANSISTOR PN SI CHIP PD=300MW	28480	1853-0020
A2Q22	1853-0020		TRANSISTOR PNP SI CHIP PD=300MW	28480	1853-0020
A2Q23	1853-0020		TRANSISTOR PNNP SI CHIP PD=300MW	28480	1853-0020
A2Q24	1853-0020		TRANSISTOR PNP SI CHIP PD=300MW	28480	1853-0020
A2Q25	1853-0020		TRANSISTOR PNP SI CHIP PD=300MW	28480	1853-0020
A2Q26	1853-0020		TRANSISTOR PNP SI CHIP PD=300MW	28480	1853-0020
A2Q27	1853-0020		TRANSISTOR PNP SI CHIP PD=300MW	28480	1853-0020
A2Q28	1853-0020		TRANSISTOR PNP SI CHIP PD=300MW	28480	1853-0020
A2R1	0698-3450	5	RESISTOR 42.5K 1% .125W F TUBULAR	16299	C4-1/8-TO-4222-F
A2R2	0698-3156	2	RESISTOR 14.7K 1% .125W F TUBULAR	16299	C4-1/8-TO-1472-F
A2R3	0683-2265	1	RESISTOR 22M 5% .25W CC TUBULAR	01121	CB2265
A2R4			NOT ASSIGNED		
A2R5	0757-0459	1	RESISTOR 56.2K 1% .125W F TUBULAR	24546	C4-1/8-TO-5622-F
A2R6	0698-3159	3	RESISTOR 26.1K 1% .125W F TUBULAR	16299	C4-1/8-TO-2612-F
A2R7	0698-3450		RESISTOR 42.2K 1% .125W F TUBULAR	16299	C4-1/8-TO-4222-F
A2R8	1810-0151		NETWORK-RES RK-PIN SIP	28480	1810-0151
A2R9	0698-3441		RESISTOR 215 1% .125W F TUBULAR	24546	C4-1/8-TO-215R-F
A2R10	0757-0444	3	RESISTOR 12.1K 1% .125W F TUBULAR	24546	C4-1/8-TO-1212-F
A2R11	0757-0442		RESISTOR 10K 1% .125W F TUBULAR	24546	C4-1/8-TO-1002-F
A2R12	0757-0465	9	RESISTOR 100K 1% .125W F TUBULAR	24546	C4-1/8-TO-1003-F
A2R13	0698-3156		RESISTOR 14.7K 1% 0.125W F TUBULAR	16299	C4-1/8-TO-1472-F
A2R14	0698-3160	4	RESISTOR 31.6K 1% .125W F TUBULAR	16299	C4-1/8-TO-3162-F
A2R15	0698-3158	4	RESISTOR 32.7K 1% .125W F TUBULAR	16299	C4-1/8-TO-2372-F
A2R16	0757-0438		RESISTOR 5.11K 1% .125W F TUBULAR	24546	C4-1/8-TO-5111-F
A2R17	0698-0083	2	RESISTOR 1.96K 1% .125W F TUBULAR	16299	C4-1/8-TO-1961-F
A2R18	0698-3243	1	RESISTOR 178K 1% .125W F TUBULAR	16299	C4-1/8-TO-1783-F
A2R19	0757-0442		RESISTOR 10K 1% .125W F TUBULAR	24546	C4-1/8-TO-1002-F
A2R20	0698-0084	3	RESOSTOR 2.15K 1% .125W F TUBULAR	16299	C4-1/8-TO-2151-F
A2R21	1810-0151		NETWORK-RES RK-PIN SIP	28480	1810-0151
A2R22	0698-3136	5	RESISTOR 17.8K 1% .125W F TUBULAR	16299	C4-1/8-TO-1782-F
A2R23	0757-0441	1	RESISTOR 8.25K 1% .125W F TUBULAR	24546	C4-1/8-TO-8251-F
A2R24	0811-3351	1	RESISTOR 11K .025% .013W PWW TUBULAR	14140	1409
A2R25	0811-3348	2	RESISTOR 111.11 OHM .025% .013W PWW	14140	1409
A2R26	1810-0158	2	NETWORK-RES RK-PIN SIP	28480	1810-0158
A2R27	0698-3136		RESISTOR 17.8K 1% .125W F TUBULAR	16299	C4-1/8-TO-1782-F
A2R28	0698-3150	2	RESISTOR 2.37K 1% .125W F TUBULAR	16299	C4-1/8-TO-2371-F
A2R29	0698-3158		RESISTOR 23.7K 1% .125W F TUBULAR	16299	C4-1/8-TO-2372-F
A2R30	0757-0464	1	RESISTOR 90.9K 1% .125W F TUBULAR	24546	C4-1/8-TO-9092-F
A2R31	0698-3449	1	RESISTOR 28.7K 1% .125W F TUBULAR	16299	C4-1/8-TO-2872-F
A2R32	0757-0290	3	RESISTOR 6.19K 1% .125W F TUBULAR	09701	MF4C1/8-TO-6191-F
A2R33	0698-3450		RESITOR 42.2K 1% .125W F TUBULAR	16299	C4-1/8-TO-4222-F
A2R34	0757-0442		RESISTOR 10K 1% .125W F TUBULAR	24546	C4-1/8-TO-1002-F
A2R35	0698-3136		RESISTOR 17.8K 1% .125W F TUBULAR	16299	C4-1/8-TO-1782-F
A2R36	0757-0289	3	RESISTOR 13.3 1% .125W F TUBULAR	19701	MF4C1/8-TO-1332-F
A2R37	0811-3348		RESISTOR 111.1 OHM .025% .013W PWW	14140	1409
A2R38	0811-3350	1	RESISTOR 10K .025% .013W PWW TUBULAR	14140	1409
A2R39	0811-3349	1	REISOTOR 1K .025% .013W PWW TUBULAR	14140	1409
A2R40	0698-3452	2	RESISTOR 147K 1% .125W F TUBULAR	16299	C4-1/8-TO-1473-F
A2R41	0757-0443	1	RESISTOR 11K 1% .125W F TUBULAR	24546	C4-1/8-TO-1102-F
A2R42	1810-0151		NETWORK-RES RK-PIN SIP	28480	1810-0151
A2R43	0698-3136		RESISTOR 17.8K 1% .125W F TUBULAR	16299	C4-1/8-TO-1782-F
A2R44	0757-0280	10	RESISTOR 1K 1% .125W F TUBULAR	24546	C4-1/8-TO-1001-F
A2R45	1810-0151		NITWORK-RES RK-PIN SIP	28480	1810-0151
A2R46	0757-0280		RESISTOR 1K 1% .125W F TUBULAR	24546	C4-1/8-TO-1001-F
A2R47	0757-0280		RESISTOR 1K 1% .125W F TUBULAR	24546	C4-1/8-TO-1001-F
A2R48	0698-3450		RESISTOR 42.2K 1% .125W F TUBULAR	16299	C4-1/8-TO-4222-F
A2R49	0698-0084		RESISTOR 2.15K 1% .125W F TUBULAR	16299	C4-1/8-TO-2151-F
A2R50	0757-0289		RESISTOR 13.3K 1% .125W F TUBULAR	19701	MF4C1/8-TO-1332-F
A2R51	0757-0290		RESISTOR 6.19K 1% .125W F TUBULAR	19701	MF4C1/8-TO-6191-F
A2R52	0698-3450		RESISTOR 42.2K 1% .125W F TUBULAR	16299	C4-1/8-TO-4222-F
A2R53	0698-3150		RESISTOR 2.37K 1% .125W F TUBULAR	16299	C4-1/8-TO-2371-F
A2R54	0698-3159		RESISTOR 26.1K 1% .125W F TUBULAR	16299	C4-1/8-TO-2612-F
A2R55	0757-0460	5	RESISTOR 61.9K 1% .125W F TUBULAR	24546	C4-1/8-TO-6192-F
A2R56	0757-0442		RESISTOR 10K 1% .125W F TUBULAR	24546	C4-1/8-TO-1002-F
A2R57	0757-0442		RESITOR 10K 1% .125W F TUBULAR	24546	C4-1/8-TO-1002-F
A2R58	0757-0442		RESISTOR 10K 1% .125W F TUBULAR	24546	C4-1/8-TO-1002-F
A2R59	0757-0465		RESISTOR 100K 1% .125W F TUBULAR	24546	C4-1/8-TO-1003-F
A2R60	0757-0442		RESISTOR 10K 1% .125W F TUBULAR	24546	C4-1/8-TO-1002-F
A2R61	0757-0442		RESISTOR 10K 1% .125W F TKUBULAR	24546	C4-1/8-TO-1002-F
A2R62	0757-0465		RESISTOR 100K 1% .125W F TUBULAR	24546	C4-1/8-TO-1003-F
A2R63	0698-3154	2	RESISTOR 4.22K 1% .125W F TUBULAR	16299	C4-1/8-TO-4221-F
A2R64	0757-0200	2	RESISTOR 5.62K 1% .125W F TUBULAR	24546	C4-1/8-TO-5621-F
A2R65	0757-0460		RESISTOR 61.9K 1% .125W F TUBULAR	24546	C4-1/8-TO-6192-F

TABLE 6-2. REPLACEABLE PARTS

REFERENCE DESIGNATION	HP PART NUMBER	QTY	DESCRIPTION	MFR CODE	MFR PART NUMBER
A2R66	0757-0401		RESISTOR 100 OHM 1% .125W F TUBULAR	24546	C4-1/8-TO-101-F
A2R67	0757-0465		RESISTOR 100K 1% .125W F TUBULAR	24546	C4-1/8-TO-1003-F
A2R68	0757-0460		RESISTOR 61.9K 1% .125W F TUBULAR	24546	C4-1/8-TO-6192-F
A2R69	2100-2514	1	RESISTOR; VAR; TRMR; 20K OHM 10% C	19701	ET50X203
A2R70	0698-3154		RESITOR 4.22K 1% .125W F TUBULAR	46299	C4-1/8-TO-4221-F
A2R71	0698-3441		RESISTOR 215 OHM 1% .125W F TUBULAR	16299	C4-1/8-TO-215R-F
A2R72	0698-3441		RESISTOR 215 OHM 1% .125W F TUBULAR	16299	C4-1/8-TO-215R-F
A2R73	0698-3441		RESISTOR 215 OHM 1% .125W F TUBULAR	16299	C4-1/8-TO-215R-F
A2R74	0757-0279	1	RESISTOR 3.16DK 1% .125W F TUBULAR	24546	C4-1/8-TO-3161-F
A2R75	0757-0200		RESISTOR 5.62K F TUBULAR	24546	C4-1/8-TO-5621-F
A2R76	0757-0280		RESISTOR 1K 1% .125W F TUBULAR	24546	C4-1/8-TO-1001-F
A2R77	0757-0422	1	RESISTOR 909 OHM 1% .125W F TUBULAR	24546	C4-1/8-TO-909R-F
A2R78	0698-0085	3	RESISTOR 2.61K 1% .125W F TUBULAR	16299	C4-1/8-TO-2611-F
A2R79	0698-3446	1	RESISTOR 383 1% .125W F TUBULAR	16299	C4-1/8-TO-383R-F
A2R80	0698-0085		RESISTOR 2.61K 1% .125W F TUBULAR	16299	C4-1/8-TO-2611-F
A2R81	0757-0288	1	RESISTOR 9.09K 1% .125W F TUBULAR	16299	C4-1/8-TO-9091-F
A2TP1	0360-1514	23	TERMINAL; SLDR STUD	28480	0360-1514
A2TP2	0360-1514		TERMINAL; SLDR STUD	28480	0360-1514
A2TP3	0360-1514		TERMINAL; SLDR STUD	28480	0360-1514
A2TP4	0360-1514		TERMIAL; SLDR STUD	28480	0360-1514
A2TP5	0360-1514		TERMINAL; SLDR STUD	28480	0360-1514
A2TP6	0360-1514		TERMINA; SLDR STUD	28480	0360-1514
A2U1	1820-0223	4	IC LIN SM301AH AMPLIFIER	27014	LM301AH
A2U2	1826-0092	4	IC LIN AMPLIFIER	28480	1826-0092
A2U3	1820-0174		IC DGTL SN 74 04 N INVERTER	01295	SN7404N
A2U4	1826-0161	1	IC LIN LM324N AMPLIFIER	27014	LM324N
A2U5	1826-0092		IC LIN AMPLIFIER	28480	1826-0092
A2U6	1816-0615	1	PROM RANGE		
A2U7	1818-2245	1	ROM 4K DECODER		
A2U8	1820-0223		IC LIN LM301AH AMPLIFIER	27014	LM301AH
A2VR1	1902-3002	2	DIODE-ZNR 2.37V 5% DO-7 PD=.4W TC=	0713	SZ 10939-2
A2VR2	1902-3002		DIODE-ZNR 2.37V 5% DO-7 PD=.4W TC=	04713	SZ 10939-2
			A2 MISCELLANEOUS		
	5000-9043	5	PIN: P.C. BOARD EXTRACTOR	28480	5000-9043
	5040-6847	1	EXTRACTOR, RED	28480	5040-6847
A3	00436-60002	1	A-D CONVERTER ASSEMBLY	28480	00436-60002
A3A1	00436-60010	1	AUTO ZERO ASSEMBLY	28480	00436-60010
A3C1	0180-1746		CAPACITOR-FXD; 15UF+-10% 20VDC TA-SOLID	56289	150D156X9020B2
A3C2	0180-1746		CAPACITOR-FXD; 15UF+-10% 20VDC TA-SOLID	56299	150D156X9020B2
A3C3	0180-1746		CAPACITOR-FXD; 15UF+-10% 20VDC TA-SOLID	56289	150D156X9020B2
A3C4	0160-2290		CAPACITOR-FXD .15UF +-10% 80WVDC POLYE	56289	292P1549R8
A3C5	0180-1745	1	CAPACITOR-FXD; 1.5UF+-10% 20VDC TA	56289	150D155X9020A2
A3C6	0180-1746		CAPACITOR-FXD; 15UF+-10% 20VDC TA-SOLID	56289	150D156X9020B2
A3C7	0180-0291	3	CAPACITOR-FXD; 1UF+-10% 35VDC TA-SOLID	56289	150D105X9035A2
A3C8	0160-0168	1	CAPACITOR-FXD .1UF +-10% 200WVDC POLYE	56289	292P10492
A3C9	0160-0970	1	CAPACITOR-FXD .47F +-10% 80WVDC POLYE	84411	HEW-238T
A3C10	0160-2055		CAPACITOR-FXD .01UF +80-20% 100WVDC CER	28480	0160-2055
A3C11	0180-0218	1	CAPACITOR-FXD; .15UF+-10% 35VDC TA	56289	150D154X9035A2
A3C12	0160-4272	1	CAPACITOR,O.47 UF 50VDC POLY	25140	HEW863UW
A3C13	0180-0374	1	CAPACITOR-FXD; 10UF+-10% 20VDC TA-SOLID	56289	150D106X9020B2
A3C14	0180-0291		CAPACITOR-FXD; 1UF+-10% 35VDC TA-SOLID	56289	150D105X9035A2
A3C15	0180-0291		CAPACITOR-FXD; 1UF+-10% 35VDC TA-SOLID	56289	150D105X9035A2
A3C16	0160-2290		CAPACITOR-FXD .150UF _-10% 80WVDC POLYE	56289	292P1549R8
A3C17	0180-1746		CAPACITOR-FXD; 15UF+-10% 20VDC TA-SOLID	56289	150D156X9020B2
A3CR1	1901-0040		DIODE-SWITCHING 2NS 30V 50MA	28480	1901-0040
A3CR2	1901-0040		DIODE-SWITCHING 2NS 30V 50MA	28480	1901-0040
A3CR3	1901-0040		DIODE-SWITCHING 2NS 30V 50MA	28480	1901-0040
A3CR4	1901-0040		DIODE-SWITCHING 2NS 30V 50MA	28480	1901-0040
A3CR5	1901-0040		DIODE-SWITCHING 2NS 30V 50MA	28480	1901-0040
A3CR6	1901-0179	2	DIODE-SWITCHING 750PS 15V 50MA	28480	1901-0179
A3CR7	1901-0179		DIODE-SWITCHING 750PS 15V 50MA	28480	1901-0179
A3Q1	1853-0020		TRANSISTOR PNP SI CHIP PD=300MW	28480	1853-0020
A3Q2	1853-0020		TRANSISTOR KPNP SI CHIP PD=300MW	28480	1853-0020
A3Q3	1853-0020		TRANSISTOR PNP SI CHIP PD=300MW	28480	1853-0020
A3Q4	1853-0020		TRANSISTOR PNP SI CHIP PD=300MW	28480	1853-0020
A3Q5	1853-0020		TRANSISTOR PNP SI CHIP PD=300MW	28480	1853-0020
A3Q6	1854-0071		TRANSISTOR NPN PD=300MW FT=200MHZ	28480	1854-0071
A3Q7	1854-0071		TRANSISTOR NPN SI PD=300 FT=200MHZ	28480	1854-0071
A3Q8	1854-0071		TRANSISTOR NPN SI PD=300MW FT=200MHZ	28480	1854-0071
A3Q9	1854-0071		TRANSISTOR NPN SI PD=300MW FT=200MHZ	28480	1854-0071
A3Q10	1854-0071		TRANSISTOR NPN SI PD=300MW FT=200MHZ	28480	1854-0071

TABLE 6-2. REPLACEABLE PARTS

REFERENCE DESIGNATION	HP PART NUMBER	QTY	DESCRIPTION	MFR CODE	MFR PART NUMBER
A3Q11	1853-0020		TRANSISOTR PNP SI CHIP PD=300MW	28480	1853-0020
A3Q12	1854-0071		TRANSISTOR NPN SI PD=300 FT=200MHZ	28480	1854-0071
A3Q13	1855-0414		TRANSISTOR; J-FET N-CHAN, D-MODE SI	17856	2N4393
A3Q14	1855-0414		TRANSISTOR; N-CHAN, D-MODE SI	17856	2N4393
A3Q15	1855-0414		TRANSISTOR; J-FET N-CHAN, D-MODE SI	17856	2N4393
A3Q16	1855-0414		TRANSISTOR; J-FET N-CHAN, D-MODE SI	17856	2N4393
A3Q17	1854-0071		TRANSISTOR NPN SI PD=300MW FT=200MHZ	28480	1854-0071
A3Q18	1855-0414		TRANSISTOR; J-FET N-CHAN, D-MODE SI	17856	2N4393
A3Q19	1855-0414		TRANSISTOR; J-FET N-CHAN, D-MODE SI	17856	2N4393
A3Q20	1855-0414		TRANSISTOR; J=FET N-CHAN, D-MODE SI	17856	2N4393
A3Q21	1854-0071		TRANSISTOR MPN SI PD=300MW FT=200MHZ	28480	1854-0071
A3Q22	1853-0020		TRANSISTOR PNP SI CHIP PD=300MW	28480	1853-0020
A3Q23	1854-0071		TRANSISTOR NPN SI PD=300MW FT=200MHZ	28480	1854-0071
A3Q24	1854-0071		TRANSISTOR NPN SU OD=300MW FT=200MHZ	28480	1854-0071
A3Q25	1854-0071		TRANSISTOR NPN SI PD=300MW FT=200MHZ	28480	1854-0071
A3Q26	1855-0414		TRANSISTOR; J-FET N-CHAN, D-MODE SI	17856	2N4393
A3Q27	1855-0414		TRANSISTOR; J-FET N-CHAN, D-MODE SI	17856	2N4393
A3Q28	1855-0414		TRANSISTOR; J-FET N-CHAN, D-MODE SI	17856	2N4393
A3Q29	1855-0414		TRANSISTOR; J-FET N-CHA, D-MODE SI	17856	2N4393
A3Q30	1855-0414		TRANSISTOR; J-FET N-CHAN, D-MODE SI	17856	2N4393
A3Q31	1855-0414		TRANSISTOR; J-FET N-CHAN, D-MODE SI	17856	2N4393
A3Q32	1855-0414		TRANHSISTOR; J-FET N-CHAN, D-MODE SI	17856	2N4393
A3Q33	1855-0414		TRANSISTOR; J-FET N-CHAN, D-MODE SI	17856	2N4393
A3Q34	1854-0071		TRANSISTOR NPN PD=300MW FT=200MHZ	28480	1854-0071
A3R1	0698-3157	7	RESISTOR 19.6K 1% .125W F TUBULAR	16299	C4-1/8-TO-1962-F
A3R2	2100-2516	3	RESISTOR; VAR; TRMRM; 100KOHM 10% C	28480	2100-2516
A3R3	0757-0465		RESISTOR 100K 1% .125W F TUBULAR	24546	C4-1/8-TO-1003-F
A3R4	0698-0085		RESISTOR 2.61K 1% .125W F TUBULAR	16299	C4-1/8-TO-2611-F
A3R5	1810-0151		NETWORK-RES RK-PIN SIP	28480	1810-0151
A3R6	0698-3157		RESISTOR 19.6K 1% .125W F TUBULAR	16299	C4-1/8-TO-1962-F
A3R7	0757-0467	4	RESISTOR 121K 1% .125W F TUBULAR	24546	C4-1/8-TO-1213-F
A3R8	0757-0467		RESISTOR 121K 1% .125W F TUBULAR	24546	C4-1/8-TO-1213-F
A3R9	0757-0467		RESISTOR 121K 1% .125W F TUBULAR	24546	C4-1/8-TO-1213-F
A3R10	0757-0462	3	RESISTOR 75K 1% .125W F TUBULAR	24546	C4-1/8-TO-7502-F
A3R11	1810-0158		NETWORK-RES PK-PIN SIP	28480	1810-0158
A3R12	0757-0442		RESISTOR 10K 1% .125W F TUBULAR	24546	C4-1/8-TO-1002-F
A3R13	0757-0401		RESITOR 100 OHM 1% .125W F TUBULAR	24546	C4-1/8-TO-101-F
A3R14	0698-3157		RESISTOR 19.6K 1% .125W F TUBULAR	16299	C4-1/8-TO-1962-F
A3R15	0757-0442		RESISTOR 10K 1% .125W F TUBULAR	24546	C4-1/8-TO-1002-F
A3R16	0698-3136		RESISTOR 17.8K 1% .125W F TUBULAR	16299	C4-1/8-TO-1782-F
A3R17	2100-2489	1	RESISTOR; VAR; TRMR; 5KOHM 10% C	19701	ET50X502
A3R18	0698-3157		RESISTOR 19.6K 1% .125W F TUBULAR	16299	C4-1/8-TO-1962-F
A3R19	0757-0442		RESISTOR 10K 1% .125W F TUBULAR	24546	C4-1/8-TO-1002-F
A3R20	0698-3157		RESISTOR 1936K 1% .125W F TUBULAR	16299	C4-1/8-TO-1962-F
A3R21	0757-0442		RESISTOR 10K 1% .125W F TUBULAR	24546	C4-1/8-TO-1002-F
A3R22	0757-0199	2	RESISTOR 21.5K 1% .125W F TUBULAR	24546	C4-1/8-TO-2152-F
A3R23	0757-0462		RESISTOR 75K 1% .125W F TUBULAR	24546	C4-1/8-TO-7502-F
A3R24	0698-3157		RESISTOR 19.6K 1% .125W F TUBULAR	16299	C4-1/8-TO-1962-F
A3R25	0757-0442		RESISTOR 10K 1% .125W F TUBULAR	24546	C4-1/8-TO-1002-F
A3R26	0757-0438		RESISTOR 5.11K 1% .125W F TUBULAR	24546	C4-1/8-TO-5111-F
A3R27	0757-0401		RESISTOR 100 OHM 1% .125W F TUBULAR	24546	C4-1/8-TO-101-F
A3R28	0757-0442		RESISTOR 10K 1% .125W F TUBULAR	24546	C4-1/8-TO-1002-F
A3R29	0757-0458	2	RESISTOR 51.1K 1% .125W F TUBULALR	24546	C4-1/8-TO-5112-F
A3R30	0698-3160		RESISTOR 31.6K 1% .125W F TUBULAR	16299	C4-1/8-TO-3162-F
A3R31	0757-0442		RESISTOR 10K 1% .125W F TUBULAR	24546	C4-1/8-TO-1002-F
A3R32	0698-3452		RESISTOR 147K 1% .125W F TUBULAR	16299	C4-1/8-TO-1473-F
A3R33	0757-0421	2	RESISTOR 825 OHM 1% .125W F TUBULAR	24546	C4-1/8-TO-825R-F
A3R34	0757-0442		RESISTOR 10K 1% .125W F TUBULAR	21546	C4-1/8-TO-1002-F
A3R35	0698-3260	7	RESISTOR 464K 1% .125W F TUBULAR	19701	MF4C1/8-TO-4643-F
A3R36	0757-0199		RESISTOR 21.5K 1% .125W F TUBULAR	24546	C4-1/8-TO-2152-F
A3R37	2100-2522	1	RESISTOR; VAR; TRMR; 10KOHM 10% C	19701	ET50X103
A3R38	0698-7666	1	RESISTOR 56K 1% .125W F TUBULAR	19701	MF4C1/8-T9-5602-F
A3R39	0757-0280		RESISTOR 1K 15 .125W F TUBULAR	24546	C4-1/8-TO-1001-F
A3R40	0698-3260		RESISTOR 460K 1% .125W F TUBULAR	19701	MF4C1/8-TO-4643-F
A3R41	0757-0401		RESISTOR 100 OHM 1% .125W F TUBULAR	24546	C4-1/8-TO-101-F
A3R42	0757-0458		RESISTOR 51.1K 1% .125W TUBULAR	24546	C4-1/8-TO-5112-F
A3R43	0698-3260		RESISTOR 464K 1% .125W F TUBULAR	19701	MF4C1-1/8-TO-4643-F
A3R44	0757-0462		RESISTOR 75K 1% .125W F TUBULAR	24546	C4-1/8-TO-7502-F
A3R45	0757-0180	1	RESISTOR 31.6 OHM 1% .125W F TUBULAR	24546	C5-1/4-TO-31R6-F
A3R46	0698-3157		RESISTOR 19.6K 1% .125W F TUBULAR	16299	C4-1/8-TO-1962-F
A3R47	2100-2516		RESISTOR; VAR; TRMR; 100KOH, 10% C	28480	2100-2516
A3R48	2100-3207	1	RESISTOR; VAR; TRM; 5KOHM 10% C	28480	2100-3207
A3R49	0698-7880	2	RESITOR 28.7K 1% .125W F TUBULAR	19701	MF4C1/8-T9-2872-F
A3R50	0698-3260		RESISTOR 464K 1% .125W F TUBULAR	19701	MF4C1/8-TO-4643-F

TABLE 6-2. REPLACEABLE PARTS

REFERENCE DESIGNATION	HP PART NUMBER	QTY	DESCRIPTION	MFR CODE	MFR PART NUMBER
A3R51	0757-0465		RESISTOR 100K 1% .125W F TUBULAR	24546	C4-1/8-TO-1003-F
A3R52	0698-3158		RESITOR 23.7K 1% .125W F TUBULAR	16299	C4-1/8-TO-2372-F
A3R53	0757-0401		RESISTOR 100 OHM 1% .125W F TUBULAR	24546	C4-1/8-TO-101-F
A3R54	0757-0465		RESISTOR 100J 1% .125W F TUBULAR	24546	C4-1/8-TO-1003-F
A3R55	0757-0460		RESISTOR 61.9K 1% .125W F TUBULAR	24546	C4-1/8-TO-6192-F
A3R56	0698-3158		RESISTOR 23.7K 1% .125W F TUBULAR	16299	C4-1/8-TO-2372-F
A3R57	0698-3444	1	RESISTOR 316 OHM 1% .125W F TUBULAR	16299	C4-1/8-TO-316R-F
A3R58	0698-3160		RESISTOR 31.6K 1% .125W F TUBULAR	16299	C4-1/8-TO-3162-F
A3R59	0698-3160		RESISTOR 31.6K 1% .125W F TUBULAR	16299	C4-1/8-TO-3162-F
A3R60	0757-0465		RESISTOR 100K 1% .125W F TUBULAR	24546	C4-1/8-TO-1003-F
A3R61	0757-0438		RESISTOR 5.11K 1% .125W F TUBULAR	24546	C4-1/8-TO-5111-F
A3R62	0698-7880		RESISTOR 28.7K 1% .125W F TUBULAR	19701	MF4C1/8-T9-2872-F
A3R63	0698-6799	1	RESISTOR 4.5K 1% F TUBULAR	19701	MF4C1/8-T9-4531-F
A3R64			NOT ASSIGNED		
A3R65	2100-2516		RESISTOR; VAR; TRMR; 100KOHM 10% C	28480	2100-2516
A3R66	0698-0084		RESITOR 2.15K 1% .125W F TUBULAR	16299	C4-1/8-TO-2151-F
A3R67	0757-0289		RESISTOR 13.3K 1% .125W F TUBULAR	19701	MF4C1/8-TO-1332-F
A3R68	0757-0467		RESISTOR 121K 1% .125W F TUBULAR	24546	C4-1/8-TO-1213-F
A3R69	0757-0280		RESISTOR 1K 1% .125W F TUBULAR	24546	C4-1/8-TO-1001-F
A3R70	0698-3440	1	RESISTOR 196 OHM 1% .125W F TUBULAR	16299	C4-1/8-TO-196R-F
A3R71	0757-0420	1	RESISTOR 750 OHM 1% .125W F TUBULAR	24546	C4-1/8-TO-751-F
A3R72	0757-0401		RESISTOR 100 OHM 1% .125W F TUBULAR	24546	C4-1/8-TO-101-F
A3TP1	0360-1514		TERMINAL; SLDR STUD	28480	0360-1514
A3TP2	0360-1514		TERMINAL; SLDR STUD	28480	0360-1514
A3TP3	0360-1514		TERMINAL; SLDR STUD	28480	0360-1514
A3TP4	0360-1514		TERMINAL; SLDR STUD	28480	0360-1514
A3TP5	0360-1514		TERMINAL; SLDR STUD	28480	0360-1514
A3TP6	0360-1514		TERMINAL; SLDR STUD	28480	0360-1514
A3U1	1826-0102	2	IC LIN LM312H AMPLIFIER	27014	LM312H
A3U2	1820-0223		IC LIN LM301AH AMPLIFIER	27014	LM301AH
A3U3	1826-0102		IC LIN LM312H AMPLIFIER	27014	LM312H
A3U4	1826-0092		IC LIN AMPLIFIER	28480	1826-0092
A3U5	1826-0092		IC LIN AMPLIFIER	28480	1826-0092
A3VR1	1902-0041	2	DIODE-ZNR 5.11V 5% DO-7 PD=.4W TC=	04713	SZ 10939-98
A3VR2	1902-0680	2	DIODE; ZENER; 6.2V VZ; .25W MAX PD	03877	1N827
A3VR3	1902-3024	1	DIODE-ZNR 2.87V 5% DO-7 PD=.4W TC=-.07%	04713	SZ 10939-26
A3VR4	1902-3139	2	DIODE-ZNR 8.25V 5% DO-7 PD=.4W	04713	SZ 10939-158
A3VR5	1902-3139		DIODE-ZNR 8.25V 5% DO-7 PD=.4W	04713	SZ 10939-158
A3VR6	1902-3070	2	DIODE-ZNR 4.25V 5% DO-7 PD=.4W TC=	04713	SZ 10939-74
			A3 MISCILLANEOUS		
	5000-9043		PIN: P.C. BOARD EXTRACTOR	28480	5000-9043
	5040-6852	1	EXTRACTOR, CRANGE	28480	5040-6852
A4	00436-60003	1	COUNTER ASSEMBLY	28480	00436-60003
A4C1	0180-0197		CAPACITOR-VCD; 2.2UF+-10% VDC TA	56289	150D225X9020A2
A4C2	0160-2055		CAPACITOR-FXD .01UF +80-20% 100WVDC CER	28480	0160-2055
A4C3	0160-2055		CAPACITOR-FXD .01UF +80-20% 100WVDC CER	28480	0160-2055
A4C4	0160-2055		CAPACITOR-FXD .01 +80-20% 100WVDC CER	28480	0160-2055
A4C5	0160-2055		CAPACITOR-FXD .01UF +80-20% 100WVDC CER	28480	0160-2055
A4C6	0160-2055		CAPACITOR-FXD .01UF +80-20% 100WVC CER	280480	0160-2055
A4C7	0160-2055		CAPACITOR-FXD .01UF +80-20% 200WVDC CER	28480	0160-2055
A4C8	0160-2055		CAPACITOR-FXD .01UF +80-20% 100WVDC CER	28480	0160-2055
A4C9	0160-3456	2	CAPACITOR-FXD 1000UF +10% 1000WVDC CER	28480	0160-3456
A4C10	0160-3456		CAPACITOR-FXD 1000 +10% 1000WVDC CER	28480	0160-3456
A4J1	1200-0507	2	SOCKET; ELEC; IC 16-CONT DIP SLDR TERM	06776	ICN-163-S3W
A4Q1	1854-0071		TRANSISTOR NPN SI PD=300MW FT=200MHZ	28480	1854-0071
A4R1	0757-0442		RESISTOR 10K .125W F TUBULAR	24546	C4-1/8-TO-1002-F
A4R2	0757-0442		RESISTOR 10K .125W F TUBULAR	24546	C4-1/8-TO-1002-F
A4R3	0757-0442		RESISTOR 10K 1% .125W F TUBULAR	24546	C4-1/8-TO-1002-F
A4R4	0757-0442		RESISTOR 10K 1% .125W F TUBULAR	24546	C4-1/8-TO-1002-F
A4R5	0698-3260		RESISTOR 46K 1% .125W F TUBULAR	19701	MF4C1/8-TO-4643-F
A4R6	0757-0438		RESISTOR 5.11K 1% .125W F TUBULAR	24546	C4-1/8-TO-5111-F
A4TP1	0360-1514		TERMNINAL; SLDR STUD	28480	0360-1514
A4TP2	0360-1514		TERMINAL; SLDR STUD	28480	0360-1514
A4TP3	0360-1514		TERMINAL; SLDR STUD	28480	0360-1514
A4U1	1820-1411	5	IC	01295	SN74LS75N
A4U2	1820-1411		IC	01295	SN74LS75N
A4U3	1820-1411		IC	01295	SN74LS75N
A4U4	1820-1411		IC	01295	SN74LS75N
A4U5	1820-0546	8	IC DGIL SN74192N COUNTER	01295	SN74192N

TABLE 6-2. REPLACEABLE PARTS

REFERENCE DESIGNATION	HP PART NUMBER	QTY	DESCRIPTION	MFR CODE	MFR PART NUMBER
A4U6	1820-0546		IC DGTL SN749192N COUNTER	01295	SN74192N
A4U7	1820-0546		IC DGTL SN74192N CONUNTER	01295	SN74192N
A4U8	1820-0546		IC DGTL SN74192N COUNTER	01295	SN74192N
A4U9	1820-0546		IC DGTL SN7 192N COUNTER	01295	SN74192N
A4U10	1820-0546		IC DGTL SN74192N COUNTER	01295	SN74192N
A4U11	1820-0546		IC DGTL SN74192N COUNTER	01295	SN74192N
A4U12	1820-0546		IC DGTL SN74192N COUNTER	01295	SN74192N
A4U13	1820-1202	2	IC DGTL SN74LS 10N GATE	01295	SN74LS10N
A4U14	1820-1197	4	IC DGTL SN74LS 00 N GATE	01295	SN74LS00N
A4U15	1820-1212	1	IC DGTL SN74LS112 N FLIP-FLOP	01295	SN74LS112N
A4U16	1820-0077	1	DGTL SN74 74 N FLIP-FLOP	01295	SN7474N
A4U17	1820-0076	1	IC DGTL SN74 76N FLIP-FLOP	01295	SN7476N
A4U18	1820-1197		IC DGTL SN74LS 00 N GATE	011295	SN74LS00N
A4U19	1820-1197		IC DGTL SN74LS 00 N GATE	01295	SN74LS00N
A4U20	1820-1204	1	IC DGTL LSN74LS 20 N GATE	01295	SN74LS20N
A4U21	1820-1199	2	IC DGTL SN74LS 04 N INVERTER	01295	SN74LS04N
A4Y1	0410-0590	1	CRYSTAL, QUARTZ 240 KHZ	42.45	A-0410-0590-1
			A4 MISCELLANEOUS		
	5000-9043		PIN: P.C. BOARD EXTRACTOR	28480	5000-9043
	5040-6848	1	EXTRACTOR	28480	5040-6848
A5	00436-60004	1	CONTROLLER ASSEMBLY (DOES NOT INCLUDE A5U11)	28480	00436-60004
A5C1	0180-0197		CAPACITOR-FXD; 2.2UF+-10% 20VDC TA	56289	1500225X9020A2
A5C2	0180-0100	2	CAPACITOR-FXD; 4.7UF+-10% 35VDC TA	56289	150D475X9035B2
A5C3	0160-2055		CAPACITOR-FXD .01UF +80-20% 100VDC CER	28480	0160-2055
A5C4	0160-2055		CAPACITOR-FXD .01UF +80-20% 100VDC CER	28480	0160-2055
A5C5	0180-2206		CAPACITOR-FXD; 60UF+-10% 6VDC TA-SOLID	56289	150D606X9006B2
A5CR1	1901-0040		DIODE-SWITCHING 2NS 30V 50MA	28480	1901-0040
A5Q1	1854-0071		TRANSISTOR NPN SI PD=300MW FT=200MHZ	28480	1854-0071
A5Q2	1854-0071		TRANSISTOR NPN SI PD=300 FT=200MHZ	28480	1854-0071
A5Q3	1854-0071		TRANSISTOR NPN SI PD=300MW FT=200MHZ	28480	1854-0071
A5Q4	1854-0071		TRANSISTOR NPN PD=300MW FT=200MHZ	28480	1854-0071
A5Q5	1854-0071		TRANSISTOR NPN SI PD=300MW FT=200MHZ	28480	1854-0071
A5Q6	1853-0020		TRANSISTOR PN SI CHIP PD=300MW	28480	1853-0020
A5R1	0757-0280		RESISTOR 1K 1% .125W F TUBULAR	24546	C4-1/8-TO-1001-F
A5R2	0698-0083		RESISTOR 1.96K 1% .125W F TUBULAR	16299	C4-1/8-TO-1961-F
A5R3	1810-0151		NETWOR-RES RK-PIN SIP	28480	1810-0151
A5R4	1810-0151		NETWOR-RES RK-PIN SIP	28480	1810-0151
A5R5	0698-3260		RESISTOR 464K 1% .125W F TUBULAR	19701	MF4C1/8-TO-4643-F
A5R6	0698-3260		RESISTOR 464K 1% .125W F TUBULAR	19701	MF4C1/8-TO-4643-F
A5R7	0683-4755	1	RESISTOR 4.7M 5% .25W CC TUBULAR	01121	CB4755
A5R8	1810-0151		NETWORK-RES RK-PIN SIP	28480	1810-0151
A5R9	0757-0438		RESISTOR 5.11K 1% .125W F TUBULAR	24546	C4-1/8-TO-5111-F
A5R10	0757-0442		RESISTOR 10K 1% .125W F TUBULAR	24546	C4-1/8-TO-1002-F
A5R11	1810-0151		NETWOR-RES RK-IN SIP	28480	1810-0151
A5R12	1810-0151		NITWOR-RES RK-IN SIP	28480	1810-0151
A5R13	1810-0151		NITWOR-RES RK-PIN SIP	28480	1810-0151
A5R14	0757-0460		RESISTOR 61.9K 1% .125W F TUBULAR	24546	C4-1/8-TO-6192-F
A5R15	0757-0442		RESISTOR 10K 1% .125W F TUBULAR	24546	C4-1/8-TO-1002-F
A5R16	0698-3160		RESISTOR 31.6K 1% .125W F TKUBULAR	16299	C4-1/8-TO-3162-F
A5R17	0757-0280		RESISTOR 1K 1% .125W F TUBULAR	24546	C4-1/8-TO-1001-F
A5R18	0698-3159		RESISTOR 26.1K 1% .125W F TUBULAR	16299	C4-1/8-TO-2612-F
A5R19	0757-0290		RESISTOR 6.19K 1% .125W F TUBULAR	19701	MF4C1/8-TO-6191-F
A5R20	0757-0442		RESISTOR 10K 1% .125W F TUBULAR	24546	C4-1/8-TO-1002-F
A5R21	0757-0444		RESISTOR 12.1K 1% .125W F TUBULAR	24546	C4-1/8-TO-1212-F
A5R22	0757-0444		REISTOR 12.1K 1% .125W F TUBULAR	24546	C4-1/8-TO-1212-F
A5U1	1820-1112	5	IC DGTL SN74LS 74 N FLIP-FLOP	01295	SN74LS74N
A5U2	1820-1112		IC DGTL SN74LS 74 N FLIP-FLOP	01295	SN74LS74N
A5U3	1820-1112		IC DGTL SN74LS 74 N FLOP-FLOP	01295	SN74LS74N
A5U4	1820-1112		IC DGTL SN74LS 74N FLIP-FLOP	01295	SN74LS74N
A5U5	1820-0054	2	IC DGTL SN74 00N GATE	01295	SN7400N
A5U6	1820-0328	1	IC DGTL SN74 02 N GATE	01295	SN7402N
A5U7	1820-1194	1	IC DGTL SN74LS193N COUNTER	01295	SN74LS193N
A5U8	1820-1112		IC DGTL SN74LS 74 N FLIP-FLOP	01295	SN74LS74N
A5U9	1820-1411		IC	01295	SN74LS75N
A5U10	1820-0175		IC DGTL SN74 05 N INVERTER	01295	SN7405N

TABLE 6-2. REPLACEABLE PARTS

REFERENCE DESIGNATION	HP PART NUMBER	QTY	DESCRIPTION	MFR CODE	MFR PART NUMBER
A5U11	1818-2244	1	ROM, 4K CONTROLLER (NOT SUPPLIED WITH A5)		
A5U12	1820-1199		IC DGTL SN74LS 04 N INVERTER	01295	SN74LS04N
A5U13	1820-0640	1	IC DGTL SN74 150 N MULTIPLEXER	01295	SN74150N
A5U14	1820-0495	1	IC DGTL DECODER	07263	9311DC
A5U15	1820-1197		IC DGTL SN74LS 00N GATE	01295	SN74LS00N
A5U16	1820-1202		IC DGTL SN74LS 10N GATE	01295	SN74LS10N
A5U17	1820-0054		IC DGTL SN74 00 N GATE	01295	SN7400N
A5VR1	1902-3070		DIODE-ZNR 4.22V 5% DO-7 PF=.4W TC=	04713	SZ 10939-74
A5XU11	1200-0553	1	SOCKET, IC 28-PIN		
			A5 MICELLANEOUS		
	5000-9043		PIN: P.C. BOARD EXTRACTOR	28480	5000-9043
	5040-6851	1	EXTRACTOR	28480	5040-6851

TABLE 6-2. REPLACEABLE PARTS

REFERENCE DESIGNATION	HP PART NUMBER	QTY	DESCRIPTION	MFR CODE	MFR PART NUMBER
A6	00436-60005	1	HP INTERFACE BUS (HP-IB) CONTROL ASSEMBLY (FOR OPTION 022 ONLY)	28480	00436-60005
A6C1	0180-0197	2	CAPACITOR-FXC; 2.2UF_+-10% 20VDC TA	56289	150D225X9020A2
A6C2	0160-3879	12	CAPACITOR-FXD .01UF +-10% 100WVDC CER	28480	0160-3879
A6C3	0160-3879		CAPACITOR-FXD .01UF +-20% 100WVDC CER	28480	0160-3879
A6C4	0160-3879		CAPACITOR-FXD .01UF +-20% 100WVC CER	28480	0160-3879
A6C5	0160-3879		CAPACIOR-FXD .01UF +-20% 100WVDC CER	28480	0160-3879
A6C6	0160-3879		CAPACITOR-FXD .01UF +-20% 100WVDC CER	28480	0160-3879
A6C7	0160-3878	4	CAPACITOR-FXD 1000PF +-20% 100WVDC CER	28480	0160-3878
A6C8	0160-3879		CAPACITOR-FXD .01UF +-20% 200WVDC CER	28480	0160-3879
A6C9	0160-3879		CAPACITOR-FXD .01UF +-20% 100WVDC CER	28480	0160-3879
A6C10	0160-3879		CAPACITOR-FXD .01UF +-20% 100WVDC CER	28480	0160-3879
A6C11	0160-3879		CAPACITOR-FXD .01UF +-20% 100WVC CER	28480	0160-3879
A6C12	0160-3879		CAPACITOR-FXD .01UF +-20% 100WVDC CER	28480	0160-3879
A6C13	0160-3878		CAPACITOR-FXD 1000PF +-20% 100WVDC CER	28480	0160-3878
A6C14	0160-0574	3	CAPACITOR-FXD .022UF +-20% 100WVDC CER	28480	0160-0574
A6C15	0160-0574		CAPACITOR-FXD .022UF +-20% 100WVDC CER	28480	0160-0574
A6C16	0160-0574		CAPACITOR-FXD .022UF +-20% 100WVDC CER	28480	0160-0574
A6C17	0160-3878		CAPACITOR-FXD 1000PF +-20% 100WVDC CER	28480	0160-3878
A6C18	0160-3878		CAPACITOR-FXD 1000PF +20% 100WVDC CER	28480	0160-3878
A6CR1	1901-0040	1	DIODE-SWITCHING 2NS 30V 50MA	28480	1901-0040
A6Q1	1853-0020	1	TRANSISTOR PNP SI CHIP PD=300MW	28480	1853-0020
A6R1	0698-3444	6	RESISTOR 316 OHM 1% .125W F TUBULAR	16299	C4-1/8-TO-316R-F
A6R2	0757-0280	1	RESISTOR 1K 1% .125W F TUBULAR	24546	C4-1/8-TO-1001-F
A6R3	0698-3444		RESISTOR 316 OHM 1% .125W F TUBULAR	16299	C4-1/8-TO-316R-F
A6R4	0698-3444		RESISTOR 316 OHM 1% .125W F TUBULAR	16299	C4-1/8-TO-316R-F
A6R5	0757-0442	7	RESISTOR 10K 1% .125W F TUBULAR	24546	C4-1/8-TO-1002-F
A6R6	0698-3444		RESISTOR 316 OHM 1% .125W F TUBULAR	16299	C4-1/8-TO-316R-F
A6R7	0698-3444		RESISTOR 316 OHM 1% .125W F TUBULAR	16299	C4-1/8-TO-316R-F
A6R8	0698-3444		RESISTOR 316 OHM 1% .125W F TUBULAR	216299	C4-1/8-TO-316R-F
A6R9	0757-0442		RESISTOR 10K 1% .125W F TUBULAR	24546	C4-1/8-TO-1002-F
A6R10	0757-0442		RESISTOR 10K 1% .125W F TUBULAR	24546	C4-1/8-TO-1002-F
A6R11	0757-0442		RESISTOR 10K 1% .125W F TUBULAR	24546	C4-1/8-TO-1002-F
A6TP1	0360-1514	4	TERIMINAL; SLDR TUD	28480	0360-1514
A6TP2	0360-1514		TERMINAL; SLDR STUD	28480	0360-1514
A6TP3	0360-1514		TERIMNAL; SLDR STUD	28480	0360-1514
A6TP4	0360-1514		TERMIANL; SLDR STUD	28480	0360-1514
A6U1	1820-1204	1	IC DGTL SN74LS 20 N GATE	01295	SN74LS20N
A6U2	1820-1144	3	IC DGTL SN 74LS 01 N GATE	01295	SN74LS02N
A6U3	1820-1197	3	IC DGTL SN74LS 00N GATE	01295	SN74LS00N
A6U4	1820-1207	1	ICC DGTL SN 74LS 30N GATE	01295	SN74LS30N
A6U5	1820-1112	5	IC DGTL SN74LS 74 N FLIP-FLOP	01295	SN74LS74N
A6U6	1820-1112		IC DGTL SN74LS 74 N FLIP-FLOP	01295	SN74LS74N
A6U7	1820-1144		IC DGTL SN74LS 02N GATE	01295	SN74LS02N
A6U8	1820-1112		IC DGTL SN 74LS 74 B FLIP-FLOP	01295	SN74LS74N
A6U9	1820-1053	2	IC DGTL SN74 14 N SCHMITT TRIGGER	01295	SN7414N
A6U10	1820-1199	2	IC DGTL SN74LS 04 N INVERTER	01295	SN74LS04N
A6U11	1820-1202	2	IC DGTL SN74LS 10N GATE	01295	SN74LS10N
A6U12	1820-0621	3	IC DGTL SN74 38 N BUFFER	01298	SN7438N
A6U13	1820-1197		IC DGTL SN SN74LS 00N GATE	01295	SN74LS00N
A6U14	1820-1212	1	IC DGTL SN74LS112 N FLI-FLOP	01295	SN74LS112N
A6U15	1820-1298	5	IC DGTL SN74LS251 N DATA SELECTO	01295	SN74LS251N
A6U16	1820-1198	3	IC DGTL SN74LS 03 N GATE	01295	SN74LS03N
A6U17	1820-1112		IC DGTL SN74LS 74 N FLIP-FLOP	01295	SN74LS74N
A6U18	1820-1053		IC DGTL SN74 14N SCHMITT TRIGGER	01295	SN7414N
A6U19	1820-1199		IC DGTL SN74LS 04N INVERTER	01295	SN74LS04N
A6U20	1820-1197		IC DGTL SN74LS 00N GATE	01295	SN74LS00N
A6U21	1820-1144		IC DGTL SN74LS 01N GATE	01295	SN74LS02N
A6U22	1820-1056	1	CI DGTL SN74 132 N COUNTER	01295	SN74132N
A6U23	1820-1216	1	IC DGTL SN74LS138 N DECODER	01295	SN74LS138N
A6U24	1820-1202		IC DGTL SN74LS 10N GATE	01295	SN74LS10N
A6U25	1820-1112		IC DGTL SN74LS 74 N FLIP-FLOP	01295	SN74LS74N
A6U26	1820-1198		IC DGTL SN74LS 03 N GATE	01295	SN74LS03N
A6XA1-A6XA6			NOT ASSIGNNED		
A6XA7	1251-2315	1	CONNECTOR; PC EDGE; 20-CIBTL DIP SOLDER	05574	3VH20/1JV5/079

TABLE 6-2. REPLACEABLE PARTS

REFERENCE DESIGNATION	HP PART NUMBER	QTY	DESCRIPTION	MFR CODE	MFR PART NUMBER
			A6 MISCELLANEOUS (OPT 022)		
	5000-9043	1	PIN: P.C. BOARD EXTRACTOR	28480	5000-9043
	5040-6849	1	EXTRACTOR, P.C. BOARD	28480	5040-6849
A7	00436-60012	1	HP INTERFACE BUS (HP-IB) INPUT/OUTPUT ASSY (FOR OPTION 022 ONLY)	28480	00436-60012
A7C1	0180-0197		CAPACITOR-FXD; 2.2UF+-10% 20VDC TA	56289	150D225X9020A2
A7C2	0160-3879		CPACITOR-FXD .01UF +-20% 100WVDC CER	28480	0160-3879
A7C3	0160-3879		CAPACITOR-FXD .01UF +-20% 100WVDC CER	28480	0160-3879
A7J1	1200-0507	1	SOCKET; ELEC; IC 16-CONT DIP SLDR TERM	06776	ICN-163-S3W
A7J2			NOT ASSIGNED		
A7J3			NOT ASSIGNED		
A7J4			NOT ASSIGNED		
A7J5			NOT ASSIGNED		
A7J6			NOT ASSIGNED		
A7J7	1251-3283	1	CONNECTOR; 24-CONT; FEM; MICRORIBBON	28480	1251-3283
A7Q1	1854-0071	1	TRANSISTOR NPN SI PD=300MW FT=200MHZ	28480	1854-0071
A7R1	1810-0151	2	NETWORK-RES RK-PIN SIP	28480	1810-0151
A7R2	1810-0151		NETWOR-RES RK-PIN SIP	28480	1810-0151
A7R3	1810-0136	2	NETWOR-RES 10-PIN SIP .1-PIN-SPCG	28480	1810-0136
A7R4	0757-0442		RESISTOR 10K 1% .125W F TUBULAR	24546	C4-1/8-TO-1002-F
A7R5	0757-0442		RESISTOR 10K 1% .125W F TUBULAR	24546	C4-1/8-TO-1002-F
A7R6	0757-0442		RESISTOR 10K 1% .125W F TUBULAR	24546	C4-1/8-TO-1002-F
A7R7	1810-0136		NETWOR-RES 10-PIN SIP .1PIN-SPCG	28480	1810-0136
A7S1	3101-1213	1	SWITCH-TGL SUBMIN SPST .5A 120VAC PC	84640	T8201
A7U1	1820-1298		IC DGTL SN74LS251 N DATA SELECTOR	01295	SN74LS251N
A7U2	1820-1194	1	IC DGTL SN74LS193N COUNTER	01295	SN74LS193N
A7U3	1820-1298		IC DGTL SN74LS251N DATA SELECTOR	01295	SN74LS251N
A7U4	1816-0614	0614	1	PROM	
A7U5	1820-0621		UC DGTK SB74 38 N BUFFER	01295	SN7438N
A7U6	1820-1298		IC SN 74LS251 N DATA SELECTOR	01295	SN74LS251N
A7U7	1820-1198		IC DGTL SN74LS 03 N GATE	01295	SN74LS03N
A7U8	1820-0621		IC DGTL SN74 36 N BUFFER	01295	SN7438N
A7U9	1820-1298		IC DGTL SN74LS251 N DATA SELECTOR	01295	SN74LS251N
			A7 MISCELLANEOUS (OPT 022)		
	0380-0643	2	STANSOFF-METRIC	28480	0380-0643
	1530-1098	2	FAXTENER:0.136" DIA 6-32 THREAD	00000	OBD
	00436-00010	1	COVER PLATE. HP-IB	28480	00436-00010
	5951-7587	1	TAG, HARDWARE	28480	5951-7587

TABLE 6-2. REPLACEABLE PARTS

REFERENCE DESIGNATION	HP PART NUMBER	QTY	DESCRIPTION	MFR CODE	MFR PART NUMBER
A6	00436-60013	1	BCD INTEFACE BUS CONTROL ASSEMBLY (FOR OPTIN 024 ONLY)	28480	00436-60013
A6C1	0180-0197	1	CAPACITOR-FXD; 2.2UF+-10% 20VDC TA	56289	150D225X9020A2
A6C2	0160-2055	6	CAPACITOR-FXD .01UF +80-20% 100WVDC CER	28480	0160-2055
A6C3	0160-2055		CAPACITOR-FXD .01UF +80-20% 100WVDC CER	28480	0160-2055
A6C4	0160-2055		CAPACITOR-FXD .01UF +80-20% 100WVDC CER	28480	0160-2055
A6C5	0160-2055		CAPACITOR-FXD .01UF +80-20% 100WVDC CER	28480	0160-2055
A6C6	0160-2055		CAPACITOR-FXD .01UF +8020% 100WVDC CER	28480	0160-2055
A6C7	0160-2055		CAPACITOR-FXD .01UF +8020% 100WVDC CER	28480	0160-2055
A6J1	1200-0507	1	SOCKET; ELEC; IC 16-CONT DIP SLDR TERM	06776	ICN-163-S3W
A6J2-A6J6			NOT ASSIGNED		
A6J7	1251-2955	1	CONNECTOR, PC EDGE, 25-CONT, DIP SOLDER	05574	3KH25/21JV12/079
A6Q1	1853-0020	1	TRANSISTOR PNP SI CHIP PD=300MW	28480	1853-0020
A6R1	1810-0151	3	NETWORK-RES RK-PIN SIP 10K OHM	28480	1810-0151
A6R2	1810-0151		NETWOR-RES RK-PIN SIP 10K OHM	28480	1810-0151
A6R3	0757-0442	1	RESISTOR 10K 1% .125W F TUBULAR	24546	C4-1/8-TO-1002-F
A6R4	0757-0438	1	RESISTOR 5.11K 1% .125W F TUBULAR	24546	C4-1/8-TO-5111-F
A6R5	1810-0151		NETWOR-RES RK-PIN SIP	28480	1810-0151
A6TP1	0360-1514	3	TERMINAL; SLDR TUD	28480	0360-1514
A6TP2	0360-1514		TERMINAL; SDR STUD	28480	0360-1514
A6TP3	0360-1514		TERMINAL; SLDR STUD	28480	0360-1514
A6U1	1820-1201	7	IC DGTL SN74LS 08 N GATE	01295	SN74LS08N
A6U2	1820-1199	3	IC DGTL SN74LD 04 N INVERTER	01295	SN74LS04N
A6U3	1820-1197	2	IC DGTL SN74LS 00 N GATE	01295	SN74LS00N
A6U4	1820-1201		IC DGTL SN74LS 08 N GATE	01295	SN74LS08N
A6U5	1820-1201		IC DGTL SN74LS 08 N GATE	01295	SN74LS08N
A6U6	1820-1201		IC DGTL SN74LS 08 N GATE	01295	SN74LS08N
A6U7	1820-1112	1	IC DGTL SN74LS 74 N FLIP-FLOP	01295	SN74LS74N
A6U8	1820-1298	1	IC DGTL SN74LS251 N DATA SELCTOR	01295	SN74LS251N
A6U9	1820-1201		IC DGTL SN74LS 08 N GATE	01295	SN74LS08N
A6U10	1820-1201		IC DGTLSN74LS 08 N GATE	01295	SN74LS08N
A6U11	1820-1201		IC DGTL SN74LS 08 N GATE3	01295	SN74LS08N
A6U12	1820-1198	1	IC DGTL SN74LS 03 N GATE	01295	SN74LS03N
A6U13	1820-1197		IC DGTL SN74LS 00 N GATE	01295	SN74LS00N
A6U14	1820-1199		IC DGTLSN74LS 04 N INVERTER	01295	SN74LS04N
A6U15	1820-0621	1	IC DGTL SN74 38N BUFFER	01295	SN7438N
A6U16	1820-1199		IC DGTL SN74LS 04 N INVERTER	01295	SN74LS04N
			A6 MISCELLANEOUS (OPT 024)		
	5000-9043	1	PIN: P.C. BOARD EXTRACTOR	28480	5000-9043
	5040-6849	1	EXTRACTOR, P.C. BOARD	28480	5040-6849
A7	00436-60031	1	BCD INTERFACE BUS INPUT/OUTPUT ASSY (FOR OPTION 024 ONLY)	28480	00436-60031
			A7 MISCELLANEOUS (OPT 024)		
	0520-0129	1	SCREW-MACH 2-56 PN HD POZI REC SST300	28480	0520-0129
	0590-0106	1	NUT-HEX-PLSTC LKG 2-56-THD .141-THK .25	72962	22NM-26
	1251-0087	1	CONNECTOR, 50-CONT, FEM, MICRO RIBBON	71785	57-40500-375
	00436-00017	1	COVER PLATE, BCD	28480	00436-00017

TABLE 6-2. REPLACEABLE PARTS

REFERENCE DESIGNATION	HP PART NUMBER	QTY	DESCRIPTION	MFR CODE	MFR PART NUMBER
A8	00436-60030	1	POWER REFERENCE OSCILLATOR ASSEMBLY	28480	00436-60030
A8C1	0160-3879	4	CAPACITOR-FXD .01UF +20% 100WVDC CER	28480	0160-3879
A8C2	0160-3036	2	CAPACITOR-FXD 5000PF +80-20% 200WVDC CER	28480	0160-3036
A8C3	0160-3036		CAPACITOR-FXD 5000PF +680-20% 200WVDC CER	28480	0160-3036
A8C4	0160-3879		CAPACITOR-FXD .01UF +-20% 100WVDC CER	28480	0160-3879
A8C5	0160-3879		CAPACITOR-FXD .01UF +-20% 100WVDC CER	28480	0160-3879
A8C6	0160-2207	1	CAPACITOR-FXD 300PF +-5% 300WVDC MICA	28480	0160-2207
A8C7	0160-2204	1	CAPACITOR-FXD 100PF +-5% 300WVDC MICA	28480	0160-2204
A8C8	0180-0100		CAPACITOR-FXD; 4.7UF+-10% 35VDC TA	56289	150D475X9035B2
A8C9	0160-2255	1	CAPACITOR-FXD 8.2PF +-.25 500WVDC CER	28480	0160-2255
A8C10	0160-3878	1	CAPACITOR-FXD 1000PF +-20% 100WVDC CER	28480	0160-3878
A8C11	0160-2150	1	CAPACITOR-FXD 33PF +5% 300WVDC MICA	2480	0160-2150
A8C12	0160-3879		CAPACITOR-FXD .01UF +-20% 100WVDC CER	28480	0160-3879
A8C13	0160-4006	1	CAPACITOR-FXD 36PF+-5% 300WVDC GL	28480	0160-4006
A8C14	0160-4007	1	CAPACITOR-FXD 200PF +-5% 300WVDC GL	28480	0160-4007
A8C1	1901-0518		DIODE-SCHOTTKY	28480	1901-0518
A8CR2	1901-0518		DIODE-SCHOTTKY	28480	1901-0518
A8CR3	0122-0299	1	DIO-VVC 82PF 5% C2/20=2000000 MIN	04713	SMV389-299
A8J1	1250-1220	1	CONNECTOR-RF SMC M PC	98291	50-051-0109
A8L1	00436-80001	1	COIL, VARIABLE	28480	00436-80001
A8L2	9140-0144	1	COIL; FXD; RF XHOKE; 4.7UH 10%	24226	10/471
A8L3	00436-80002	1	COIL, 3-1/2 TURNS	28480	00436-80002
A8Q1	1854-0247	1	TRANSISTOR NPN SI TO39 PF=1W FT=800MHZ	28480	1854-0247
A8Q2	1854-0071		TRANSISTOR NPN SI PD300=MW FT=200MHZ	28480	1854-0071
A8R1	0757-0442		RESISTOR 10K 1% .125W F TUBULAR	24546	C4-1/8-TO-1002-F
A8R2	0757-0421		RESISTOR 825 OHM 1% .125W F TUBULAR	2546	C4-1/8-TO-825R-F
A8R3	0811-3234	1	RESISTOR 10K 1% .05W PWW TUBULAR	20940	140-1/20-1002-F
A8R4	2100-3154	1	RESISTOR-VAR TRMR 1KOHM 10% C SIDE ADJ	32997	3006P-1-102
A8R5	0811-3381	1	RESISTOR, 7.10K OHM 1.0% 0.50W WW	54294	SP41
A8R6	0757-0440	1	RESISTOR 7.5K 1% .125W F TUBULAR	24546	C4-1/8-TO-7501-F
A8R7	0698-7284	2	RESISTOR 100K 2% .05W F TUBULAR	24546	C3-1/8-TO-1003-G
A8R8	0757-0465		RESISTOR 100K 1% .125W F TUBULAR	24546	C4-1/8-TO-1003-F
A8R9	0698-7284		RESISTOR 100K 2% .05W F TUBULAR	24546	C3-1/8-TO-1003-G
A8R10	0757-0280		RESISTOR 1K 1% .125W F TUBULAR	24546	C4-1/8-TO-1001-F
A8R11	0757-0280		RESITOR 1K 1% .125W F TUBULAR	24546	C4-1/8-TO-1001-F
A8R12	0757-0442		RESISTOR 10K 1% .125W F TUBULAR	24546	C4-1/8-TO-1002-F
A8R13	0757-0438		RESISTOR 5.11K 1% .125W F TUBULAR	24546	C4-1/8-TO-5111-F
A8R14	0757-0398	1	RESISTOR 75 OHM 1% .125W F TUBULAR	024546	C4-1/8-TO-75R0-F
A8R15	0757-0317	1	RESISTOR 1.33K 1% .125W F TUBULAR	24546	C4-1/8-TO-1331-F
A8R16	0698-8581	1	RESISTOR 50.5 OHM 1% B0.125W F TUBULAR	19701	MF4C-1
A8TP1	0360-1514		TERMINAL; SLDR STUC 28480	28480	0360-1514
A8TP2	0360-1514		TERIMINAL; SLDR STUD	28480	0360-1514
A8U1	1826-0013	1	IC LIN AMPLIFIER	28480	1826-0013
A8U2	1820-0223		IC LIN LM301AH AMPLIFIER	27014	LM301AH
A8VR1	1902-0680		DIODE; ZENSER; 6.2V VZ; .25W MAX PD	03877	1N827
A8VR2	1902-0041		DIODE-ZNR 5.11V 5% DO-7 PD=.4W TC=	04713	SZ 10939-98
			A8 MISCELLANEOUS		
	2190-0008	4	WASHER-LK EXT T NO. 6 IN ID .32 IN	78189	1806-00
	2190-0009	5	WASHER-LK INTL T NO. 8 .168 IN ID .34 IN	73734	1333
	2190-0124	1	WASHER-LK INTL T NC. 10 .195 IN ID .311	24931	LW101-30
	2360-0209	4	SCREW-MACH 6-32 PN HD POZI REC SST-300	28480	2360-0209
	2580-0002	5	NUT-HEX-DBL CHAM 8-32-THD .085-THK .25	28480	2580-0002
	2950-0078	1	NUT-HEX-DBL CHAM 10-32-THD .067-THK .25	24931	HN100-11
	3050-0079		WASHER-FL NM NO. 2 .094 IN ID .188 IN OD	23050	2
	7100-1204	1	CAN, RECT 2.00"	28480	7100-1204
A9	00436-60006	1	POWER SUPPLY ASSEMBLY	28480	00436-60006
A9C1	0180-1985	2	CAPACITOR-FXD; 500UF+75-10% 30VDC AL	56289	39D507G030FL4
A9C2	0180-1985		CAPACITOR-FXD; 500UF+75-10% 30VDC AL	56289	39D507G030FL4
A9CR1	1901-0200	2	DIODE-PWR RECT 100V 1.5A	04713	SR1846-9
A9CR2	1901-0200		DIODE-PWR RECT 100V 10.5A	04713	SR1846-9
A9CR3	1901-0159	4	DIODE-PWR RECT 400V 750MA	04713	SR1358-4
A9CR4	1901-0159		DIODE-PWR RECT 400V 750MA	04713	SR1358-4
A9CR5	1901-0159		DIODE-PWR RECT 400V 750MA	04713	SR1358-4
A9CR6	1901-0159		DIODE-PWR RECT 400V 750MA	04713	SR1358-4

TABLE 6-2. REPLACEABLE PARTS

REFERENCE DESIGNATION	HP PART NUMBER	QTY	DESCRIPTION	MFR CODE	MFR PART NUMBER
A9F1	2110-0012	2	FUSE .5A 250V	71400	AGC 1/2
A9F2	2110-0012		SUSE .5A 250V	71400	AGC 1/2
A9F3	2110-0010	1	FUSE 5A 250V	71400	MTH-5
A9TP1	0360-1514		TERIMINAL; SLDR STUD	28480	0360-1514
A9TP2	0360-1514		TERIMINAL; SLDR STUD	28480	0360-1514
A9TP3	0360-1514		TERMINAL; SLDR STUD	28480	0360-1514
A9TP4	0360-1514		TERIMINAL; SLDR STUD	28480	0360-1514
A9TP5	0360-1514		TERIMINAL; SLDR STUD	28480	0360-1514
A9TP6	0360-1514		TERIMINAL; SLDR STUD	28480	0360-1514
A9U1	1826-0283	1	IC, VOLTAGE REGULATOR	27014	LM325AS
			A9 MISCELLANEOUS		
	1205-0294	1	HEAT SISSIPATOR 1.18' LG X 1.00" WIDE	98978	PBI-38CB
	2110-0269	6	FUSEHOLDER	28480	2110-0269
	2200-0103	2	SCREW-MACH 4-40 PAN HD POZI REC SST-300	28480	2200-0103
	5000-9043		PIN:P.C. BOARD EXTRACTOR	28480	5000-9043
	5040-6845	1	PC BOARD EXTRACTOR, WHITE	28480	5040-6845
A10	00436-60009	1	MOTHER BOARD ASSEMBLY	28480	00436-60009
A10J1	1200-0508		SOCKET; ELEC; IC 14-CONT DIP SLDR TERM	06776	ICN-143-S3W
A10J2	1200-0507		SOCKET; ELEC; IC 16-CONT DIP SLDR TERM	06776	ICN-163-S3W
A10J3	1251-3898	2	CONNECTOR, 10-PIN	06776	
A10J4	1251-3898		CONNECTOR, 10-PIN		
A10VR1	1902-0551	1	DIODE; ZENER; 6.19V VZ; 1W MAX PD	04713	SZ 11213-80
A10XU1			NOT ASSIGNED		
A10XU2	1251-1365		CONNECTOR; PC EDGE; 33-CONT; DIP SOLDER	71785	252-22-30-300
A10XU3	1251-1365		CONNECTOR; PC EDGE; 22-CONT; DIP SOLDER	71785	252-22-30-300
A10XU4	1251-1365		CONNECTOR; PC EDGE; 22-CONT; DIP SOLDER	71785	252-22-30-300
A10XU5A	1251-1365	5	CONNECTOR; PC EDGE; 22-ONT; DIP SOLDER	74785	252-22-30-300
A10XU5B	1251-1626	1	CONNECTOR; PC EDGE; 12-CONT; DIP SOLDER	71785	252-12-30-300
A10XU6	1251-1365		CONNECTOR; PC EDGE; 22-CONT; DIP SOLDER	71785	252-22-30-300
			A10 MISCELLANEOUS		
	2190-0007	4	WASHER-LK INTL T NO.6 .141 IN ID .288	78189	1906-00
	2360-0195	4	SCREW-MACH 6-32 PN HD POZI REC SST-300	28480	2360-0195
A11	0960-0444	1	LINE MODULE,UNFILTERED	28480	0960-0444
W3	00436-60023	1	CABLE ASSY, MOLEX, FRONT	28480	00436-60023
W3P1	1251-3537	2	CONNECTOR; 10-CONT; FEM; POST TYPE4	27264	09-50-7101
	1251-3897	19	CONTACT		
W3P2	1251-0512	1	CONNECTOR; 5-CONT; FEM; POST TYPE	27264	09-50-7051
W7	00436-60024	1	CABLE ASSY, MOLEX, REAR	28480	00436-60024
W7P1	1251-3537		CONNECTOR; 10-CONT; FEM; POST TYPE	27264	09-50-7101
	1251-3897		CONTACT		
C1	0180-2221	1	CAKPACITOR-FXD; 7200UF+75-10% 15VDC AL	56289	32D722G015BA2A
	0360-0270	2	TERIMINAL, SLDR LUG, 10 SCR, .195/.093	79963	807
	2680-0128	2	SCREW-MACH 10-32 PAN HD POZI REC SST	28480	2680-0128
	0180-0078	1	CLAMP-CAP .75-IN-WD	56289	4586-2B
C2	0180-0197		CAPACITOR-FXD; 2.2UF+-10% 20VDC TA	56289	150D225X9020A2
C3	0160-2437	3	CAPACITOR-FXD 5000PF +80-20% 200WVDC CER	28480	0160-2437
	2190-0009		WASHER-LK INTL T MO.8 .168 IN ID .34 IN	73734	1333
	2580-0002		NUT-HEX-DBL CHAM 8-32-THD .085-THK .25	28480	0160-2437
C4	0160-2437		CAPACITOR-FXD 5000PF =80-20% 200VDC CER	28480	0160-2437
	2190-0009		WASHER-LK INTL T MO. 8 .168 IN ID .34 IN	13734	1333
	2580-0002		NUT-HEX-DBL CHAM 8-32-THD .085-THK .25	28480	2580-0002
C5	0160-2437		CAPACITOR-FXD 5000PF +80-205 200WVDC CER	28480	0160-2437
	2190-0009		WASHER-LK INTL T NO. 8 .168 IN ID .34 IN	73734	1333
	2580-0002		NUT-HEX-DBL CHAM 8-32THD .085-THK .25	28480	2580-0002
F1	2110-0063	1	FUSE .75 250V (FOR 100, 120 VAC OPERATION)	71400 71400	AGC-3/4
F1	2110-0421	1	FUSE .375A. 350V (FOR 220, 240 VAC OPERATION)	71400	AGC-3/8
J1			MOUNT, CONNECTOR, FRONT; PART OF W5		
	1251-3362	1	NUT:HEX	28480	1251-3362
	00436-20014	1	WASHER, CONNECTOR MOUNT	28480	00436-20014
J2			REFENCE OSC., FRONT;PART OF W6		
	0590-0011	1	NUT-LNURLED R 5/8-24-THD .125-THK .75-OD	28480	0590-0011

TABLE 6-2. REPLACEABLE PARTS

REFERENCE DESIGNATION	HP PART NUMBER	QTY	DESCRIPTION	MFR CODE	MFR PART NUMBER
J3	1250-0083	2	CONNECTOR-RF BNC FEM SGL HOLE FR	24931	28JR-130-1
	2190-0016		WASHER-LK INTL T .377 IN ID K.507 IN OD	78189	1920-02
	2950-0001	2	NUTHEX-DBL CHAM 3/8-32-THD .094-THK .5	12697	20/4-13
J4	1250-0083		CONNECTOR-RF BNC FEM SGL HOLE RF	24931	28JR-130-1
	2190-0016		WASHER-LK INTLT .377 IN ID .507 IN OD	78189	1920-02
	2950-0001		NUT-HEX-DBL CHAM 3/8-32-THD .094-THK .5	12697	20/4-13
J5			REFERENCE OSC. CONNECTOR, REAR; P/O W10		
J6			MOUNT, CONNECTOR, REAR; PART OF W9		
J7	1251-0087	1	BCD INTERNAL CONNECTOR (OPT 024 ONLY) (PART OF A7)	71785	57-40500-375
J7	1251-3283	1	HP-IB INTERNAL CONNECTOR(OPT 022 ONLY) MCHANICAL PARTS	28480	1251-3283
MP1	0520-0128	2	SCREW-MACH 2-56 X .25 PAN HD POZI REC	28480	0520-0128
MP2	1460-1345	2	SPRING, WIREFORM 3-LG SST	28480	1460-1345
MP3	2190-0045	2	WASHER, LOCK SPR #2 .088" ID	76854	1501-009
MP4	2360-0115	14	SCREW-MACH 6-32 PAN POZI REC SST-300	28480	2360-0115
MP5	2360-0334	4	SCREW-MACH 6-32 100 DEG FL HD PZI REC	04866	YELLOW PATCH
MP6	2510-0192	8	SCREW-MACH 8-32 10 DEG FL HD POZI REC	04866	YELLOW PATCH
MP7	6960-0024	1	PLUG-HOLE, .688" ID(OMIT ON OPT 002 & 003)	28520	P-687
MP8	6960-0027	1	PLUG, HOLE, STANDARD HD, .625 DIA NYLON (OMIT ON OPTION 003)	28520	P-625
MP9	5001-0439	2	TRIM, SIDE FRONT	28480	5001-0439
MP10	5020-8815	1	FRAME, FRONT	28480	5020-8815
MP11	5020-8879	2	STUT CONRNER	28480	5020-8879
MP12	5040-7201	4	FEET	28480	5040-7201
MP13	5040-7203	1	TRIM STRIP	28480	5040-7203
MP14	5060-9971	1	COVER, PERFORANTED BOTTOM	28480	5060-9971
MP15	00436-00002	1	SUPPORT, RIGHT HAND	28480	00436-00002
MP16	00436-00003	1	SUPPORT, LEFT HAND	28480	00436-00003
MP17	00436-00011	1	COVER, PLATE, BLANK	28480	00436-00011
MP18	00436-00018	1	COVER, TOP, UPPER, PERFORATED	28480	00436-00018
MP19	5020-8816	1	FRAME,REAR	28480	5020-8816
MP20	00436-00007	1	PANEL, REAR	28480	00436-00007
MP21	00436-00008	1	SHIELD, POWER SUPPLY	28480	00436-00008
MP22	00436-00013	1	COVER, TRANSFORMER	28480	00436-00013
MP23	00436-00001	1	SUB-PANEL, FRONT	25480	00436-00001
MP24	00436-00004	1	PANEL, FRONT, LOWER	28480	00436-00004
MP25	00436-20017	1	WINDOW, FRONT	28480	00436-20017
MP26	5040-6927	1	STRIP	28480	5040-6927
P1-P10	0362-0192	10	TERIMINAL, CRP, QDISC FEM, 0.046 TAB,		2611225-12
S1	00436-60028	1	POWER SWITCH ASSEMBLY	28480	00436-60028
	00436-60014	1	POWER SWITCH CONNECTOR ROD	28480	00436-60014
	0510-0067	2	NUT-SHEETMETAL-U 4-40-THD .21-WD STL	78553	C10558-440-24R
	2200-0105	2	SCREW-MACH 4-40 PAN HD POZI REC SST-300	28480	2200-0105
T1	9100-0647	1	TRANSFORMER		
	2360-0139	4	SCREW-MACH 6-32 PAN HD POZI REC SST-300	28480	2360-0139
	0590-0025	4	NUT-HEX-PLSTC LKG 3-32-THD .172-THK	72962	ESNA 97NM62
TB1	5020-8122	1	LINE VOLTAGE SELECTOR CARD	28480	5020-8122
U1	1826-0181	1	IC LIN LM323K REGULATOR	27014	LM323K
	0626-0002	2	SCREW-TPG 6-20 PAN	28480	0626-0002
W1	8120-0629	1	CABLE ASSY	28480	8120-0629
W2	8120-0617	1	CABLE; UNSHLD 16-COND 26AWG	28480	8120-0617
W3			SEE INFORMATION FOLLOWING A11		
W4	8120-1733	1	CABLE; UNSHLD 16-COND 26AWG	08261	IC-SS-1626-7B-2-4-01
W5	00436-60025	1	CABLE ASSY,SENSOR INPUT(INCL J1; OMIT ON OPTION 003)	28480	00436-60025
W6	00436-60029	1	CABLE, REF. OSC. OUTPUT (INCL J2; OMIT ON OPTION 003)	28480	00436-60029
W7			SEE INFORMATION FOLLOWING A11		
W8	8120-1378	1	CABLE; UNSHLD 3-COND 18AWG	28480	8120-1378
W9	00436-60032	1	CABLE,SENSOR IN REAR(INCL J6; OPTION 002 AND 003)	28480	00436-60032
W10	00436-60033	1	CABLE, REF. OSC. REAR (INCL J5; OPTION 003 ONLY)	28480	00436-60033
W11	00436-60022	1	DATA CABLE (OPTION 022 & 024)	28480	00436-60022
W12	00436-60026	1	CABLE ASSY, FT(OMIT ON OPT'S 009, 010, 011, 012 AND 013)	28480	00436-60026
W12	8120-2263	1	CABLE ASSY,SENSOR 10FT(OPT 009 ONLY)	28480	8120-2263
W12	8120-2264	1	CABLE ASSY,SENSOR 20 FT(OPT 010 ONLY)	28480	8120-2264
W12	8120-2265	1	CABLE ASSY,SENSOR 50 FT(OPT 011 ONLY)	28480	8120-2265
W12	8120-2260	1	CABLE ASSY,SENSOR 100 FT(OPT 012 ONLY)	28480	8120-2260
W12	8120-2261	1	CABLE ASSY,SENSOR 200 FT(OPT 013 ONLY)	28480	8120-2261
W12	8120-2262	1	CABLE ASSY,SENSOR	28480	8120-2262

Table 6-2. Replaceable Parts

Reference Designation	HP Part Number	Qty	Description	Mfr Code	Mfr Part Number
			MISCELLANSOUS PARTS		
XA9	1251-2309	1	CONNECTOR: PC EDGE: 12-CONT: SOLDER EYE	71785	250-12-30-210
	2190-0003	2	WASHER-LK HLCL NO. 4 .115 IN ID .253 IN	28480	2190-0003
	2200-0147	2	SCREW-MACH 4-40 PAN HD POZI REC SST-300	28480	2200-0147
	3050-0105	2	WASHER-F L MTLC NO. 4 .125 IN ID .281 IN	28480	3050-0105
	7120-4006	1	LABEL, INFO	28480	7120-4006
	7120-4294	2	LABEL, WARNING	28480	7120-4294
	7120-6144	1	LABEL, INFO 75 VA	28480	7120-6144
	6960-0010	1	PLUG HOLE .625 DIA (OPT 003 ONLY)	77122	
	6960-0013	1	PLUG HOLE 981" DIA(OPT 003 ONLY)	57771	D-3391-LCS
	8710-0630	1	TOOL ALIGNMENT	28480	8710-0630
	00436-00005	1	BRACKET, CABLE CLAMP	28480	00436-00005

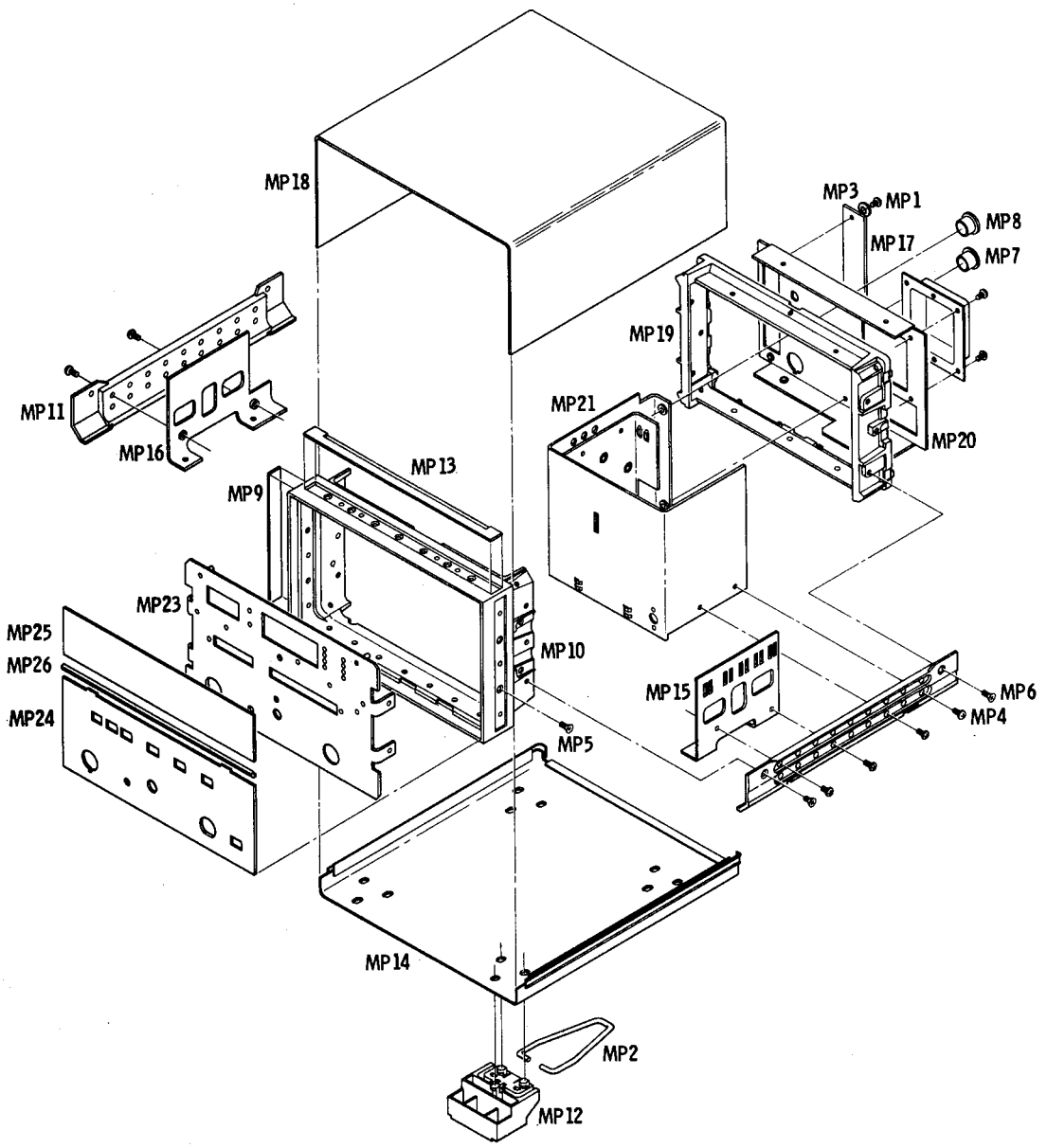

Figure 6-1. Cabinet Parts

See introduction to this section for ordering information

Table 6-3. Code List of Manufacturers

Mfr Code	Manufacturer Name	Address	Zip Code
00000	U.S.A.COMMON	ANY SUPPL IER OF USA	
01121	ALL EN BRADLEY CO	MILWAUKEE WI	53212
01295	TEXAS INSTR INC SE MICOND CMPNT DIV	DALLAS TX	75231
03877	TRANSITRON ELECTRONIC CORP	WAKEFIELD MA	01880
04713	MOTOROLA SEMICONDUCTOR PRODUCTS	PHOENIX AZ	85008
04866	NYLOK-DETROIT CORP	TROY MI	48084
05574	VIKING INDUSTRIES INC	CHATSWORTH CA	91311
06776	ROBINSON NUGENT INC	NEW ALBANY IN	47150
07263	FAIRCHILD SEMICONDUCTOR DIV	MOUNTAIN VIEW CA	94040
08261	SPECTRA-STRIP CORP	GARDEN GROVE CA	92642
12697	CL AROSTAT MFG CO INC	DOVER NH	03820
14140	EDISON ELEK DIV MCGRAW-EDISON	MANCHESTER NH	03130
16299	CORNING GL WK ELEC CMPNT DIV	RALEIGH NC	27604
17856	SILICONIX INC	SANTA CLARA CA	95050
19701	MEPCO/ELECTRA CORP	MINERAL WELLS TX	76067
20940	MICRO-OHM CORP	EL MONTE CA	91731
23050	PRODUCT COMPONENT CORP	MT VERNON NY	10553
24226	GOWANDA ELECTRONICS CORP	GOWANDA NY	14070
24546	CORNING GLASS WORKS (BRADFORD)	BRADFORD PA	16701
24931	SPECIALTY CONNECTOR CO I NC	INDIANAPOLIS IN	46227
25140	TRW EKEK COMPONENTS GLOBE DIV	DAYTON OH	45402
27014	NATIONAL SEMICONDUCTOR CORP	SANTA CLARA CA	95051
27264	MOLE X PRODUCTS CO	DOWNERS GROVE IL	60515
28480	HEWLETT-PACKARD CO CORPORATE HQ	PALO ALTO CA	94304
28520	HEYMAN MFG CO	KENILWORTHNJ	07033
32997	BOURNS INC TRIMPOT PROD DI V	RIVERSIDE CA	92507
54294	CUTLER-HAMMER- INC SHALLCROSS MFG CO	SELMA NC	27576
56289	SPRAGUE ELECTRIC CO	NORTH ADAMS MA	01247
57771	ST IMPSON EDWIN B CO INC	BROOKLYN NY	11205
71400	BUSSMAN MFG DIV OF MCGRAW-EDISON CO	ST LOUIS MO	63017
71785	TRW ELEK COMPONENTS CINCH DIV	ELK GROVE VILLAGE IL	60007
72962	ELASTIC STOP NUT DIV OF AMERACE	UNION NJ	07083
73734	FEDERAL SCREW PRODUCTS CO	CHICAGO IL	60618
73743	FISCHER SPECIAL MFG CO	CINCINNATI OH	45206
75378	CTS KNIGHTS INC	SANDWICH IL	60548
76854	OAK IND INC SW DIV	CRYSTAL LAKE IL	60014
77122	PALNUT CO UNITED-CARR DIV TRW INC	MOUNTAINSIDE NJ	07092
78189	ILLINOIS TOOL WORKS INC SHAKEPROOF	ELGIN IL	60126
78553	TINNERMAN PRODUCTS I NC	CLEVELAND OH	44129
79963	ZIERICK MFG CO	MT KISCO NY	10549
80120	SCHNITZER ALLOY PRODUCTS CO	ELIZABETH NJ	07206
81640	CONTROLS CO OF AMER CONT SWITCH DI V	FOLCROFT PA	19032
84411	TRW CAPACITOR DIV	OGALLALA NE	69153
91260	CONNOR SPRING & MFG CO	SAN JOSE CA	95112
91886	NALCO MFG CO INC	CHICAGO IL	60650
98291	SEALECTRO CORP	MAMARONECK NY	10544
98978	INTERNATIONAL ELEK RESEARCH CORP	BURBANK CA	91502

PART NUMBER-NATIONAL STOCK NUMBER
CROSS REFERENCE INDEX

PART NUMBER	FSCM	NATIONAL STOCK NUMBER	PART NUMBER	FSCM	NATIONAL STOCK NUMBER
1902-0680	28480	5961-00-008-7041			
1902-3070	28480	5961-00-931-6989			
1902-3139	28480	5961-00-494-4848			
1906-00	78189	5310-00-754-4399			
1920-02	78189	5310-00-262-0359			
2100-2489	28480	5905-01-105-1774			
2100-2514	28480	5905-00-828-5431			
2100-2516	28480	5905-00-131-3379			
2100-2522	28480	5905-00-476-5797			
2100-3154	28480	5905-00-615-8111			
2100-3274	28480	5905-01-017-0083			
2110-0012	28480	5920-00-898-0400			
2110-0063	28480	5920-00-451-3110			
2110-0269	28480	5999-00-333-9620			
250-12-30-210	71785	5935-00-093-8278			
252-22-30-300	71785	5935-00-372-1963			
2950-0001	28480	5310-00-450-3324			
3006P-1-102	32997	5905-00-107-4881			
3050-0032	28480	5365-00-988-8118			
3101-1213	28480	5930-00-237-1160			
39D507G030FL4	56289	5910-00-763-3868			
4586-2B	56289	5910-00-827-9772			
50-051-0109	98291	5935-00-858-8794			
57-40500-375	71785	5935-00-043-4067			
8120-1378	28480	6150-00-008-5075			
9140-0144	28480	5950-00-837-6029			

PART-NUMBER NATIONAL STOCK NUMBER
CROSS REFERENCE INDEX

PART NUMBER	FSCM	NATIONAL STOCK NUMBER	PART NUMBER	FSCM	NATIONAL STOCK NUMBER
0698-3446	28480	5905-00-974-6083	1251-0087	28480	5935-00-043-4067
0698-3449	28480	5905-00-828-0397	1251-1365	28480	5935-00-372-1963
0698-3450	28480	5905-00-826-3262	150D105X9035A2	56289	5910-00-104-0144
0698-3452	28480	5905-00-826-3239	150D105X9035A2	56289	5910-00-421-8346
0757-0180	28480	5905-00-972-4907	150D106X9020B2	56289	5910-00-936-1522
0757-0199	28480	5905-00-981-7513	150D154X9035A2	56289	5910-00-064-7658
0757-0200	28480	5905-00-891-4224	150D156X9020B2	56289	5910-00-235-2356
0757-0279	28480	5905-00-221-8310	150D225X9020A2	56289	5910-00-177-2581
0757-0280	28480	5905-00-853-8190	150D226X9015B2	56289	5910-00-807-7253
0757-0288	28480	5905-00-193-4318	150D336X9010B2	56289	5910-00-722-4117
0757-0289	28480	5905-00-998-1908	150D475X9035B2	56289	5910-00-177-4300
A757-0290	28480	5905-00-858-8826	150D606X9006B2	56289	5910-00-879-7313
0757-0317	28480	5905-00-244-7189	1810-0136	28480	5905-01-008-5978
0757-0346	28480	5905-00-998-1906	1810-0151	28480	5905-01-023-2750
0757-0398	28480	5905-00-788-0291	1820-0054	28480	5962-00-138-5248
0757-0401	28480	5905-00-981-7529	1820-0076	28480	5962-00-420-1677
0757-0420	28480	5905-00-493-5404	1820-0077	28480	5962-00-138-5250
0757-0421	28480	5905-00-891-4219	1820-0174	28480	5962-00-404-2559
0757-0422	28480	5905-00-728-9980	1820-0175	28480	5962-00-229-8500
0757-0438	28480	5905-00-929-2529	1820-0223	28480	5962-00-614-5251
0757-0441	28480	5905-00-858-6799	1820-0328	28480	5962-00-009-1356
0757-0442	28480	5905-00-998-1792	1826-0013	28480	5962-00-247-9568
0757-0443	28480	5905-00-891-4252	1826-0161	28480	5962-01-008-4826
0757-0444	28480	5905-00-858-9132	1853-0020	28480	5961-00-904-2540
0757-0458	28480	5905-00-494-4628	1854-0003	28480	5961-00-990-5369
0757-0459	28480	5905-00-997-9579	1854-0071	28480	5961-00-137-4608
0757-0460	28480	5905-00-858-8959	1854-0247	28480	5961-00-464-4049
0757-0462	28480	5905-00-493-0783	1901-0040	28480	5961-00-965-5917
0757-0464	28480	5905-00-420-7155	1901-0159	28480	5961-00-496-7363
0757-0465	28480	5905-00-904-4412	1901-0179	28480	5961-00-853-7934
0757-0467	28480	5905-00-858-8868	1901-0200	28480	5961-00-994-0520
10/471	24226	5950-00-961-9600	1901-0518	28480	5961-00-430-6819
1200-0473	28480	5935-00-481-4141	1902-0041	28480	5961-00-858-7372
1250-0083	28480	5935-00-804-5144	1902-0551	28480	5961-00-483-6600

PART NUMBER - NATIONAL STOCK NUMBER
CROSS REFERENCE INDEX

PART NUMBER	FSCM	NATIONAL STOCK NUMBER	PART NUMBER	FSCM	NATIONAL STOCK NUMBER
CB0565	1121	5905-00-931-1066	0160-3878	28480	5910-00-348-2617
CB2265	1121	5905-00-402-4242	0160-3879	28480	5910-00-477-8077
CB4755	1121	5905-00-498-6062	0180-0078	28480	5910-00-827-9772
LM301AH	27014	5962-00-563-1929	0180-0100	28480	5910-00-752-4172
LM323K	27014	5962-00-626-0045	0180-0197	28480	5910-00-850-5355
SN74LS00N	1295	5962-01-004-1272	0180-0218	28480	5910-00-255-3739
SN74LS138N	1295	5962-01-004-1270	0180-0228	28480	5910-00-719-9907
SN74LS20N	1295	5962-01-038-3457	0180-0229	28480	5910-00-403-2449
SN74LS30N	1295	5962-01-047-7399	0180-0291	28480	5910-00-931-7055
SN7400N	1295	5962-00-922-3138	0180-0374	28480	5910-00-931-7050
SN7402N	1295	5962-00-103-0990	0180-1746	28480	5910-00-430-6036
SN7404N	1295	5962-00-404-2559	0180-2206	28480	5910-00-879-7313
SN7405N	1295	5962-00-229-8500	0360-0270	28480	5940-00-159-1290
SN7414N	1295	5962-00-277-0132	0360-1514	28480	5940-00-150-4513
SN74150N	1295	5962-00-175-9225	0362-0192	28480	5999-00-103-1066
SN7438N	1295	5962-00-936-3416	0683-2265	28480	5905-00-402-4242
SN7474N	1295	5962-00-106-4287	0698-0083	28480	5905-00-407-0052
SN7476N	1295	5962-00-106-4285	0698-0084	28480	5905-00-974-6073
SR1358-4	4713	5961-00-496-7363	0698-0085	28480	5905-00-998-1814
SR1846-9	4713	5961-01-010-5805	0698-3136	28480	5905-00-891-4247
T8201	81640	5930-00-457-5582	0698-3150	28480	5905-00-481-1357
0160-0160	28480	5910-00-891-4207	0698-3154	28480	5905-00-891-4215
0160-0164	28480	5910-00-914-4427	0698-3156	28480	5905-00-974-6084
0160-0168	28480	5910-00-917-0668	0698-3157	28480	5905-00-433-6904
0160-2055	28480	5910-00-211-1611	0698-3158	28480	5905-00-858-8927
0160-2199	28480	5910-00-244-7164	0698-3159	28480	5905-00-407-0053
0160-2204	28480	5910-00-463-5949	0698-3160	28480	5905-00-974-6078
0160-2207	28480	5910-00-430-5675	0698-3243	28480	5905-00-891-4227
0160-2255	28480	5910-00-430-5934	0698-3260	28480	5905-00-998-1809
0160-2261	28480	5910-00-430-5750	0698-3440	28480	5905-00-828-0377
0160-2437	28480	5910-00-431-3956	0698-3441	28480	5905-00-974-6076
0160-3036	28480	5910-00-138-1326	0698-3444	28480	5905-00-974-6079

SECTION VII
MANUAL CHANGES

7-1. INTRODUCTION

7-2. This section contains manual change instructions for backdating this manual for HP Model 436A Power Meters that have serial number prefixes that are lower than the prefix listed on the title page.

7-3. MANUAL CHANGES

7-4. To adapt this manual to your instrument, refer to Table 7-1 and make all of the manual changes listed opposite your instrument's serial number or prefix. The manual changes are listed in serial number sequence and should be made in the sequence listed. For example, Change A should be made after Change B; Change B should be made after Change C.

7-5. If your instrument's serial number or prefix is not listed on the title page of this manual or in Table 7-1, it may be documented in a yellow MANUAL CHANGES supplement. For additional important information about serial number coverage, refer to INSTRUMENTS COVERED BY MANUAL in Section I.

Table 7-1. Manual Changes By Serial Number

Serial Prefix or Number	Make Manual Changes
1447A, 1451A, 1503A	C, B, A
1448A, 1501A, 1504A, 1505A	C, B
1538A, 1550A	C

7-6. MANUAL CHANGE INSTRUCTIONS

CHANGE A

Page 6-5, Table 6-2:
Delete diode A2CR3.

Page 6-6, Table 6-2:
Add A2R4 0757-0442 FXD RESISTOR 10K OHM 1% .125W F TUBULAR.
Change A2R9 0757-0442 FXD RESISTOR 10K OHM 1% .125W F TUBULAR.

Service Sheet 7, Figure 8-30:
Change schematic as follows:
Remove diode A2CR3 from transistor Q1.
Change resistor A2R9 to 10kΩ.
Connect resistor A2R4 10kΩ between U5B pin 6 and -15 VF supply point.
Add resistor A2R4 to REFERENCE DESIGNATIONS table.

CHANGE B

Page 6-9, Table 6-2:
Change A4C10 to 0160-3466 FXD 100 pF.
Change A4R5 to 0757-0465 FXD 100K OHM 1% .125W.
Change A4U5 IC COUNTER 74192N (PREFERRED PART).

Page 6-10, Table 6-2:
Change A4U6-A4U12 IC COUNTER 74192N (PREFERRED PART).

CHANGE B (cont'd)

Service Sheet 9, Figure 8-35:

Change schematic as follows:
Change capacitor A4C10 to 100 pF.
Change resistor A4R5 to 100 kΩ.

CHANGE C

Page 6-6, Table 6-2:
Change A2R18 to 0698-3453, RESISTOR 196K 1% 0.125W F TUBULAR.

Page 6-7, Table 6-2:
Delete A2R81.

Page 8-179, Figure 8-30:
Change A2R18 to 196K.
Delete A2R81 (connect R18 directly to VR2 and R20).

SECTION VIII
SERVICE

8-1. INTRODUCTION

8-2. This section provides principles of operation, troubleshooting procedures, and general service information for the Power Meter. The specific content and arrangement of this section is outlined below.

a. Safety Considerations: Provides general safety precautions that should be observed when working on the Power Meter.

b. Recommended Test Equipment: Defines the test equipment and accessories required to maintain the Power Meter.

c. Service Aids: Provides general information useful in servicing the Power Meter.

d. Repair: Provides general information for replacing factory selected components and instrument disassembly procedures.

e. Basic Circuit Descriptions: Describes the functional operation of linear and digital integrated circuits used in the Power Meter.

f. Troubleshooting: Provides step-by-step procedures for checkout and troubleshooting of a standard or a BCD-equipped instrument, and a verification program for checkout and troubleshooting of an HP-IB equipped instrument. (Additional circuit troubleshooting data is provided as required on the individual service sheets located at the end of the section.)

g. Principles of Operation: Principles of operation are provided on two levels in this section. The first level is a block diagram description which covers the overall operation of the Power Meter in detail and is located at the end of the section just before the service sheets. The second level consists of detailed circuit theory descriptions which are provided as required on the individual service sheets with the appropriate schematics.

h. Service Sheets: Foldout service sheets are provided at the end of the section. Service Sheet 1 is an overall block diagram which illustrates major signal flow and circuit dependency and is keyed, by the numbers in the lower, right-hand corners of the individual blocks on the diagram, to the detailed block diagrams. The detailed block diagrams provide an assembly-by-assembly description of instrument operation and are keyed to' the service sheets containing schematics which follow them.

NOTE

Figure 8-1, Schematic Diagram Notes, explains any unusual symbols that appear on the schematics and the switch-wafer numbering system.

8-3. SAFETY CONSIDERATIONS

8-4. Although this instrument has been designed in accordance with international safety standards, this manual contains information, cautions, and warnings which must be followed to ensure safe operation and to retain the instrument in safe condition (see Sections II, III, and V). Service and adjustments should be performed only by qualified service personnel.

WARNING

Any interruption of the protective (grounding) conductor (inside or outside the instrument) or disconnection of the protective earth terminal is likely to make the instrument dangerous. Intentional interruption is prohibited.

8-5. Any adjustment, maintenance, and repair of the opened instrument under voltage should be avoided as much as possible and, when inevitable, should be carried out only by a skilled person who is aware of the hazard involved.

8-6. Capacitors inside the instrument may still be charged even if the instrument has been disconnected from its source of supply.

8-7. Make sure that only fuses with the required rated current and of the specified type (normal blow, time delay, etc.) are used for replacement.

SCHEMATIC DIAGRAM NOTES

Resistance in ohms, capacitance in picofarads, inductance in millihenries unless otherwise noted.

* Asterisk denotes a factory-selected value. Value shown is typical. Part may be omitted.

Tool-aided adjustment. Manual control.

Encloses front-panel designation.

Encloses rear-panel designation.

Circuit assembly borderline.

Other assembly borderline. Also used to indicate mechanical interconnection (ganging).

Heavy line with arrows indicates path and direction of main signal.

Heavy dashed line with arrows indicates path and direction of main feedback.

CW Wiper moves toward CW with clockwise rotation of control (as viewed from shaft or knob).

1 Numbered Test Point. Measurement aid provided.

A Lettered Test Point. No measurement aid provided.

Encloses wire color code. Code used is the same as the resistor color code. First number identifies the base color, second number identifies the wider stripe, third number identifies the narrower stripe. E.g., (947) denotes white base, yellow wide stripe, violet narrow stripe.

A direct conducting connection to the earth, or a conducting connection to a structure that has a similar function (e.g., the frame of an air, sea, or land vehicle).

A conducting connection to a chassis or frame.

Common connections. All like-designated points are connected.

K 6 Letter = off-page connection.
Number = Service Sheet number for off-page connection.

1 THIS PAGE Number (only) = on page connection.

Figure 8-1. Schematic Diagram Notes (1 of 3)

SCHEMATIC DIAGRAM NOTES

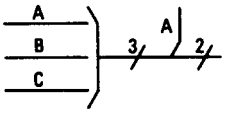

Indicates multiple paths represented by only one line. Letters or names identify individual paths. Numbers indicate number of paths represented by the line.

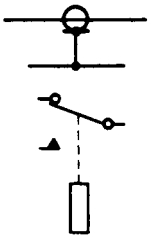

Coaxial or shielded cable.

Relay contact moves in direction of arrow when energized.

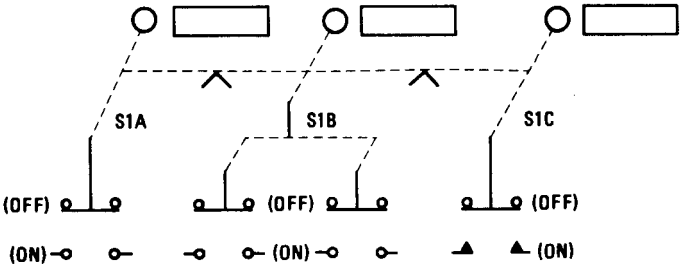

Indicates interlocked pushbutton switches with one momentary switch section. Only one switch section can be (ON) at a time. Depressing one switch section releases any other switch section.

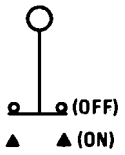

Indicates a pushbutton switch with a momentary (ON) position.

SWITCH DESIGNATIONS

EXAMPLE: A3S1AR(2-1/2)

A3S1 = SWITCH S1 WITHIN ASSEMBLY A3

A = 1ST WAFER FROM FRONT (A=1ST, ETC)

R = REAR OF WAFER (F = FRONT)

(2-1/2) = TERMINAL LOCATION (2-1/2) (VIEWED FROM FRONT)

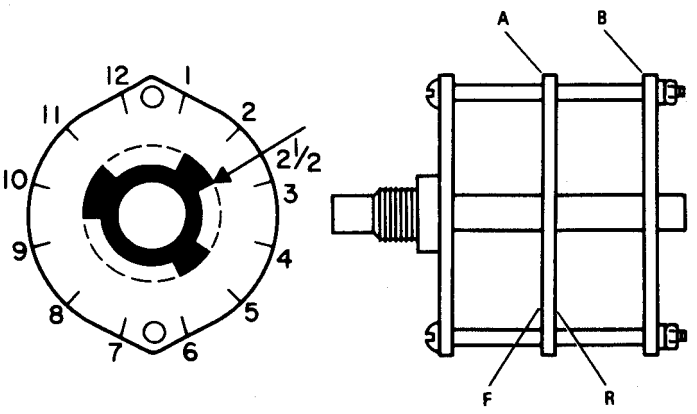

Figure 8-1. Schematic Diagram Notes (2 of 3)

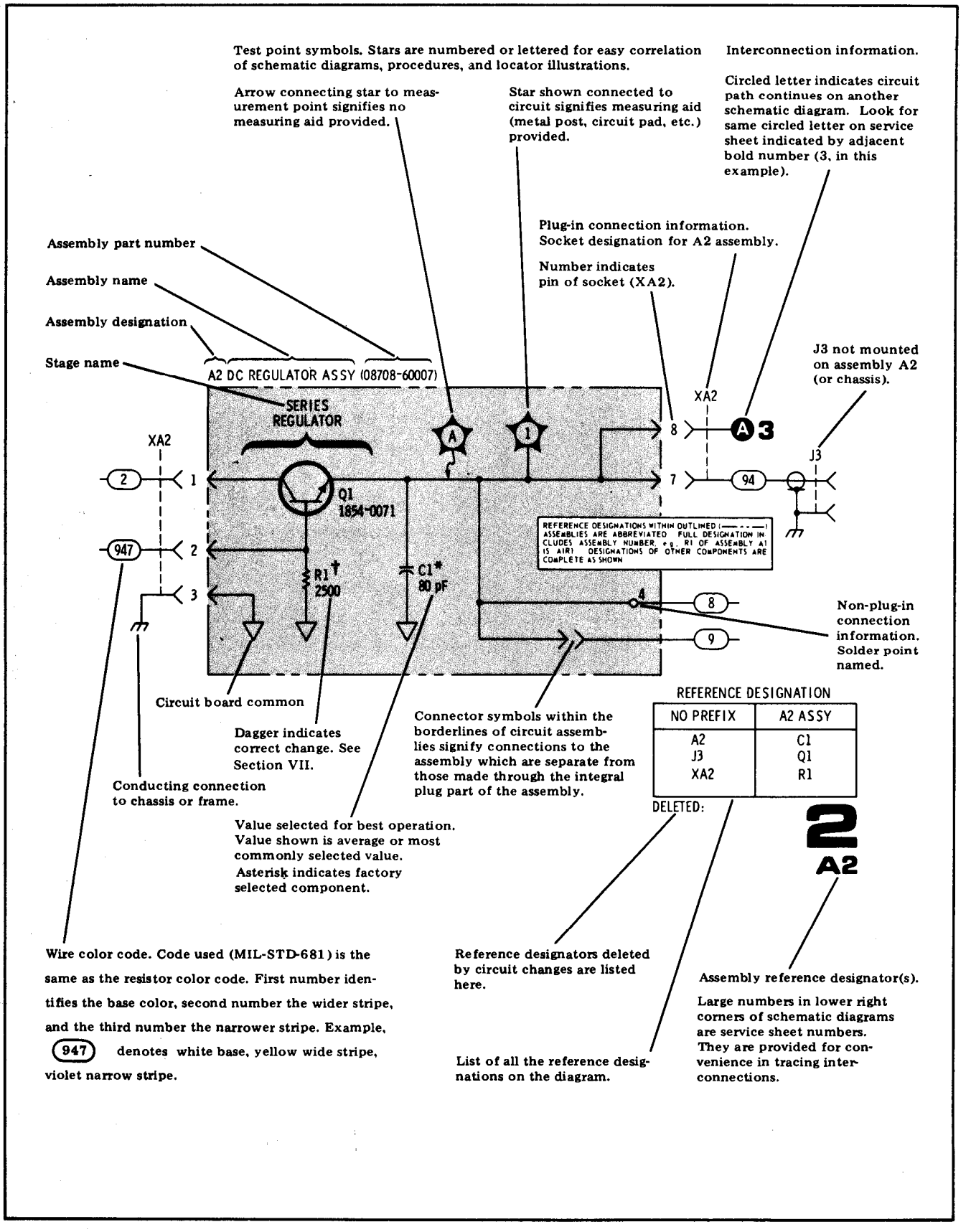

Figure 8-1. Schematic Diagram Notes (3 of 3)

Safety Considerations (cont'd)
The use of repaired fuses and the short-circuiting of fuseholders must be avoided.

8-8. Whenever it is likely that this protection has been impaired, the instrument must be made inoperative and be secured against any unintended operation.

WARNING

The service information is often used with power supplied and protective covers removed from the instrument. Energy available at many points may; if contacted, result in personal injury.

8-9. RECOMMENDED TEST EQUIPMENT

8-10. Test equipment and test equipment accessories required to maintain the Power Meter are listed in Table 1-2. Equipment other than that listed may be used if it meets the listed critical specifications.

8-11. SERVICE AIDS

8-12. Pozidriv Screwdrivers. Many screws in the instrument appear to be Phillips, but are not. To avoid damage to the screw slots, Pozidriv screwdrivers should be used.

8-13. Blade Tuning Tools. For adjustment of the front panel CAL ADJ control a special tuning tool is provided (HP Part Number 8710-0630). In situations not requiring non-metallic tuning tools, an ordinary small screwdriver or other suitable tool is sufficient. No matter what tool is used, never try to force any adjustment control in this instrument. This is especially critical when adjusting variable inductors or capacitors.

8-14. Part Location Aids. The locations of some chassis-mounted parts and the major assemblies are shown on the last foldout in this manual. The locations of individual components mounted on printed circuit boards or other assemblies are shown on the appropriate schematic diagram page or on the page opposite it. The part reference designator is the assembly designator plus the part designator (for example, A2R9 is R9 on the A2 assembly). For specific component description and ordering information refer to the parts list in Section VI.

8-15. Servicing Aids on Printed Circuit Boards. The servicing aids include test points, transistor and integrated circuit designations, adjustment callouts and assembly stock numbers.

8-16. REPAIR

8-17. Factory Selected Components

8-18. Some component values are selected at the time of final checkout at the factory (see Table 5-1). Usually these values are not extremely critical; they are selected to provide optimum compatibility with associated components. These components are identified on individual schematics by an asterisk (*). The recommended procedure for replacing a factory-selected part is as follows:

a. Try the original value, then perform the calibration test specified for the circuit in the performance and adjustment sections of this manual.

b. If calibration cannot be accomplished, try the typical value shown in the parts list and repeat the test.

c. If the test results are still not satisfactory, substitute various values within the tolerances specified in Table 5-1 until the desired result is obtained.

8-19. Disassembly and Reassembly Procedures

WARNINGS

Any adjustment, maintenance, and repair of 'the "opened instrument under voltage should be avoided as much as possible and, if inevitable, should be carried out only by a skilled person who is aware of the hazard involved.

Capacitors inside the instrument may still be charged even if the instrument has been disconnected from its source of supply.

8-20. Before performing any of the following disassembly or reassembly procedures, the following steps must be performed.

a. Set POWER ON-OFF switch to OFF position.

b. Remove Line Power Cable (W8) from Line Power Module (All).

Disassembly and Reassembly Procedures (cent'd)

8-21. Top Cover Removal. To remove the top cover from the Power Meter follow the steps as listed below:

a. Remove Pozidriv screw from rear edge of top cover.

b. Slide top cover back until free from front frame and lift off. Reverse the procedure to replace the top cover.

8-22. Bottom Cover Removal. To remove the bottom cover from the Power Meter follow the steps as listed below:

a. Place Power Meter with bottom cover facing up.

b. Remove four plastic feet from bottom cover. Lift up on back edge of plastic foot and push back on front edge of plastic foot to free foot from bottom cover.

c. Remove captive Pozidriv screw from rear edge of bottom cover.

d. Slide bottom cover back until it clears rear frame. Reverse the procedure to replace the bottom cover.

8-23. Front Panel Removal. To remove the front panel from the Power Meter follow the steps as listed below:

a. Remove top and bottom covers.

b. Remove side trim strips from front frame.

c. Remove two Pozidriv screws from both sides of front frame.

d. Carefully push front panel from behind to free it from the front frame (see Figure 8-2).

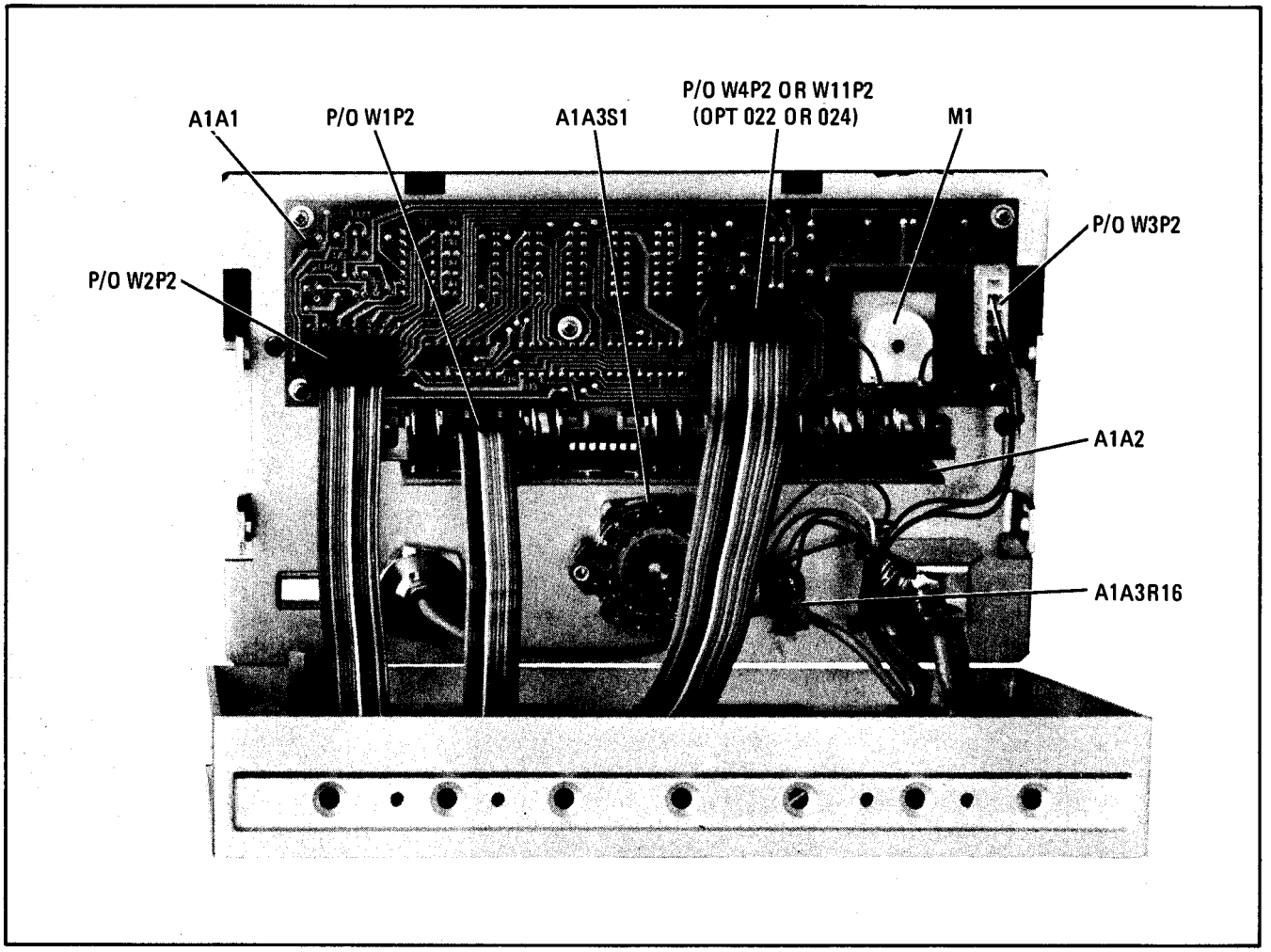

Figure 8-2. Front Panel Removal

Disassembly and Reassembly Procedures (cent'd)

e. Disconnect cables as necessary for access to front panel assemblies and components. Reverse the procedure to replace the front panel.

8-24. BASIC CIRCUIT DESCRIPTIONS

8-25. Linear Integrated Circuits

8-26. Operational Amplifiers. Operational amplifiers are used to provide such functions as summing and offsetting voltages, as buffer amplifiers, detectors, and in power supplies. The particular function is determined by the external circuit connections. Equivalent circuit and functional diagrams for typical operational amplifiers are contained in Figure 8-3. Circuit A is a non-inverting buffer amplifier with gain of one. Circuit B is a non-inverting amplifier with gain determined by the resistance of RI and R2. Circuit C is an inverting amplifier with gain determined by RI and R2, with the input impedance equal to R2. Circuit D shows the equivalent circuit and typical parameters for an operational amplifier.

NOTE

It is assumed that the amplifier has high gain, low output impedance and high input impedance.

8-27. Troubleshooting. An operational amplifier can be characterized as an ideal voltage amplifier having low output impedance, high input impedance, and very high gain. Also the output voltage is proportional to the difference in the voltages *applied* to the input terminals. In use, the amplifier drives the input voltage difference close to zero.

8-28. When troubleshooting an operational amplifier, measure the voltages at the two inputs with no signal applied; the difference between these voltages should be less than 10 mV. A difference voltage much greater than 10 mV indicates trouble in the amplifier or its external circuitry. Usually this difference will be several volts and one of the inputs will be very close to an applied circuit operating voltage (for example, +20V, -12V).

8-29. Measure the amplifier's output voltage. It will probably be close to one of the supply voltages or ground. Verify that the output voltage follows the input voltages, i.e., if the non-inverting input voltage is more positive than normal and/or if the inverting input voltage is more negative than normal, then the change in output voltage should be more positive. If the non-inverting input is less positive and/or the inverting input voltage is less negative, the change in output voltage should be less positive. The preceding symptoms indicate the defective component is in the external circuitry. If the symptoms as stated are absent, the operational amplifier is probably defective.

8-30. Digital Integrated Circuits and Symbols

8-31. Introduction. Except for two Read Only Memory (ROM) devices, all digital circuits used in this instrument belong to the TTL family. The two ROMs belong to the MOS family and are made TTL compatible via the use of pull-up resistors attached to the input/output ports. Refer to Table 8-1 for TTL and MOS input/output voltage level specifications, and for MOS input power requirements.

8-32. The symbols used in this manual conform to the requirements of American National Standard ANSI Y32.14-1973, "Graphic Symbols for Logic Diagrams (Two-State Devices)". Unless otherwise specified all symbols and signal mnemonics should be interpreted according to the following general rules:

a. Signals that are active-low are identified by the letter L or N followed by the signal mnemonic (e.g., LQT).

b. Signals that are active-high are identified by the letter H or Y followed by the signal mnemonic (e.g., HLLD).

c. A polarity indicator symbol ( ) at an input indicates that it is active-low or triggers on a low going edge; a polarity indicator symbol at an output indicates inversion or that the output is active-low. Active-high inputs or inputs which trigger on a high going edge; and active-high outputs are shown without the polarity indicator symbol.

d. A dynamic indicator symbol ( ) at an input indicates that the input triggers (is active) only on the leading or trailing edge of an input signal. If a polarity indicator symbol is present with the dynamic indicator symbol, then the input triggers on the negative edge of the input signal. Inputs that are not edge sensitive are referred to as level sensitive and are shown without the dynamic indicator symbol.

e. The output-delay indicator symbol ( ) indicates that the output is effective at the time

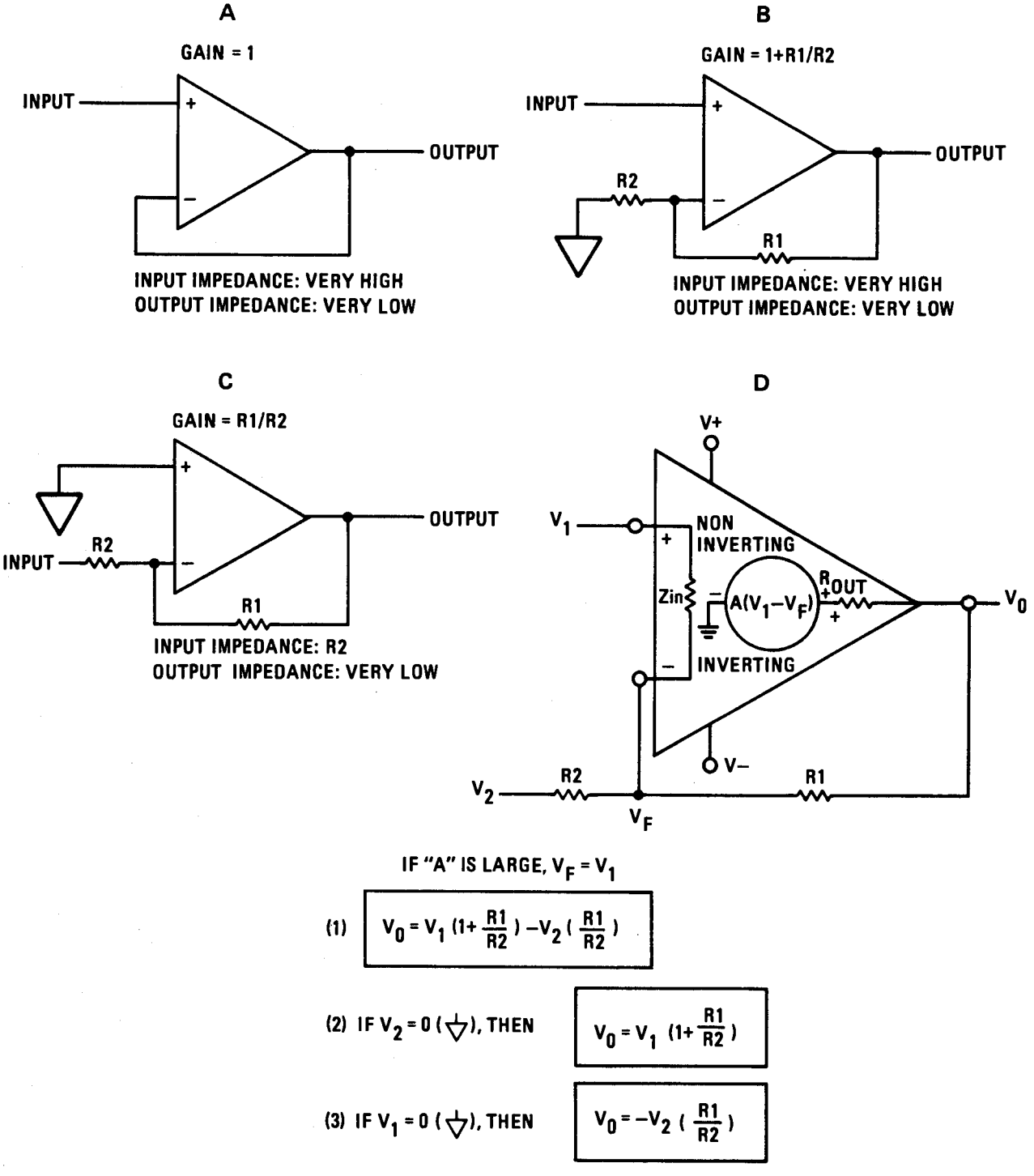

Figure 8-3. Operational Amplifier Functional Circuits

Digital Integrated Circuits and Symbols (cont'd)
that the signal which initiates the change returns to its opposite state.

f. The inhibiting-input indicator symbol (+) indicates that the output is prevented from going to its indicated state as long as the inhibiting-input remains high. If an inhibiting-input indicator and a polarity indicator symbols are used together, the output will be inhibited as long as the inhibiting-input remains low. The inhibiting-input symbol is used mainly with three-state logic devices to allow the use of the "wired OR" connection of the outputs.

NOTE

The term "binary coded decimal" (BCD) refers to four-bit binary circuits that range from decimal 0 to 9 in an 8421 code.

The term "binary", when applied to four-bit binary circuits, refers to circuits that range from decimal 0 to 15 in an 8421 code.

Table 8-1. Logic Levels and Power Requirements

Logic	High =	Low =	Power Requirements
TTL	⩾2V	⩽0.8V	Gnd, +5V
MOS	Input ⩾ 4V	Input and output G.8V	Gnd V_{DD} +5V V_{GG} +12V V_{EE} –2V
	output ⩾ 2V		

8-33. Dual D-Type Flip-Flop. The dual D-type flip-flop shown in Figure 8-4 consists of two independent D-type flip-flops. The information present at the data (D_C) input is transferred to the active-high and active-low outputs on a low-to-high transition of the clock (C) input. The data input is then locked out and the outputs do not change again until the next low-to-high transition of the clock input.

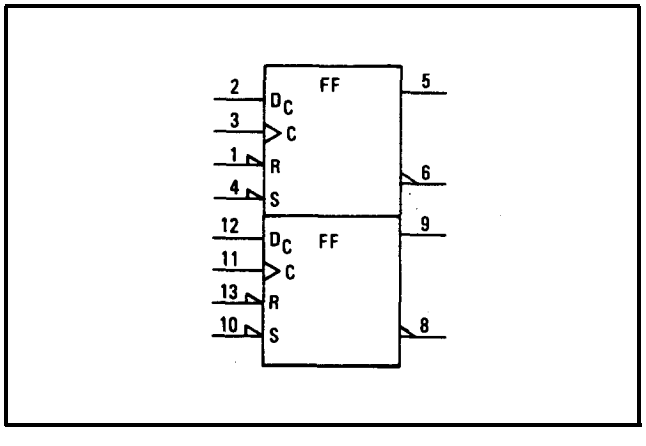

Figure 8-4. Dual D-Type Flip-Flop

8-34. The set (S) and reset (R) inputs override all other input conditions: when set (S) is low, the active-high output is forced high; when reset (R) is low, the active-high output is forced low. Although normally the active-low output is the complement of the active-high output, simultaneous low inputa at the set and reset will force both the active-low and active-high outputs to go high at the same time on some D-type flip-flops. This condition will exist only for the length of time that both set and reset inputs are held low. The flip-flop will return to some indeterminate state when both the set and reset inputs are returned to the high state.

8-35. Four-Bit Bistable Latch. The four-bit bistable latch shown in Figure 8-5 consists of four independent D-type flip-flops. The flip-flops (FF1 and FF2) are controlled by the C1 clock input and the flip-flops (FF3 and FF4) are controlled by the C2 clock input. Information present at a data (D_c) input is transferred to the active-high and active-low outputs when the associated clock input is high; the outputs will follow the data as long as the clock remains high. When the clock goes low, the information that was present at the data input when the transition occurred is retained at the outputs until the clock returns high.

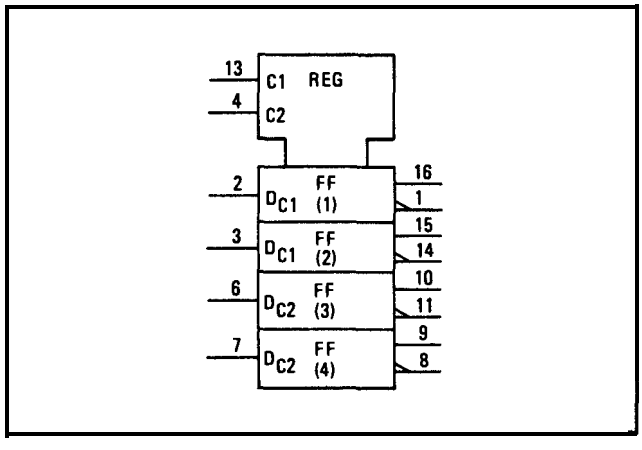

Figure 8-5. Four-Bit Bistable Latch

8-36. Dual J-K Master/Slave Flip-Flop. The dual J-K Master/Slave Flip-Flop shown in Figure 8-6 consists of two independent J-K flip-flops. Inputs to the master section is controlled by the gate (G)

Digital Integrated Circuits and Symbols (cont'd)

pulse. The gate pulse also controls the state of the coupling transistors which connect the master and slave sections. The sequence of operation is as follows:

a. T1 - Isolate slave from master.

b. T2 - Enter information from J and K inputs to master.

c. T3 - Disable J and K inputs.

d. T4 - Transfer information from master to slave.

8-37. Flip-flop response is determined by the levels present at the J and K inputs at time T2. The four possible combinations are as follows:

a. When J and K are low, the outputs will not change state.

b. When J is high and K is low, the active-high output will go high, unless it is already high.

c. When J is low and K is high, the active-high output will go low, unless it is already low.

d. When J and K are both high, the flip-flop will toggle. That is, the active-high and active-low outputs will change states for each gate pulse.

8-38. The set (S) and reset (R) inputs override all other input conditions: when set (S) is low, the active-high output is forced high; when reset (R) is low, the active-high output is forced low. Although normally the active-low output is the complement of the active-high output, simultaneous low inputs to both S and R will force both outputs high on some J/K flip-flops. This forced high on both outputs will exist only for as long as both R and S are held low. The flip-flop will return to some indeterminate state when both R and S go high.

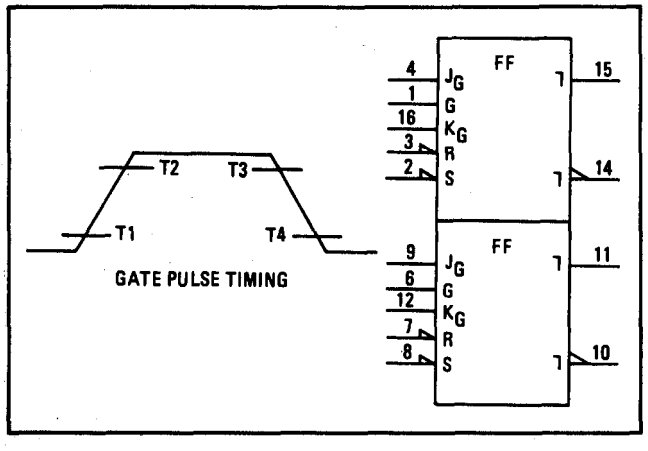

Figure 8-6. Dual J-K Master/Slave Flip-Flop and Gate Pulse Timing

8-39. Dual J-K Edge-Triggered Flip-Flop. The dual J-K edge-triggered flip-flop shown in Figure 8-7 is functionally identical to the master/slave flip-flop described previously except for gate pulse timing. The edge-triggered flip-flop response is determined by the levels present at the J and K inputs at the instant that a negative gate transition (high-to-low) occurs.

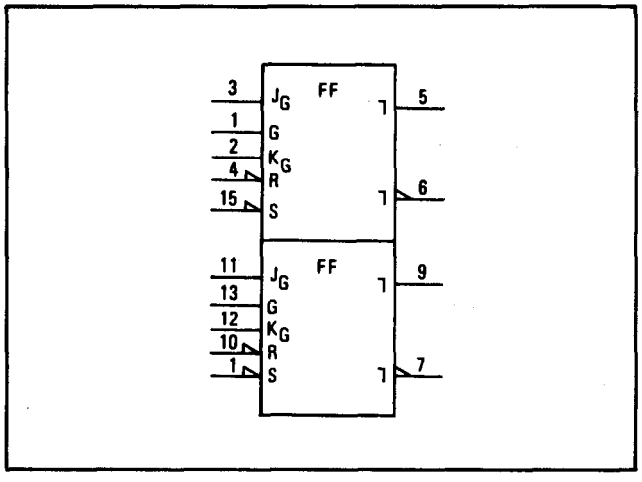

Figure 8-7. Dual J-K Edge-Triggered Flip-Flop

8-40. Programmable Counters. Programmable binary and decade counters used in the Power Meter are shown in Figure 8-8. The operating modes for both counters are identical. The only differences in operation are in the count sequences.

8-41. Operation of the counters is synchronous, with the outputs changing state after the high-to-low transition of either the Count-Up Clock (+1) or the Count-Down Clock (-1). The direction of counting is determined by which clock input is pulsed while the other clock is high. Incorrect counting will occur if both clock inputs are low simultaneously. Both counters will respond to a clock pulse on either input by changing to the next appropriate state of the count sequence. The state diagram for the decade counter (Figure 8-8) shows both the regular sequence and the sequence if a code greater than nine is present in the counter.

8-42. Both counters have a parallel load (asynchronous) facility which permits the counters to be preset. Whenever the Parallel Load input (C) and Master Reset (R) are low, the information present on the D_c inputs will be loaded into the counters and appear at the outputs independently of the conditions of the clocks. When the Parallel Load (C) input goes high, this information is stored in the counters. When the counters are clocked they will change to the next

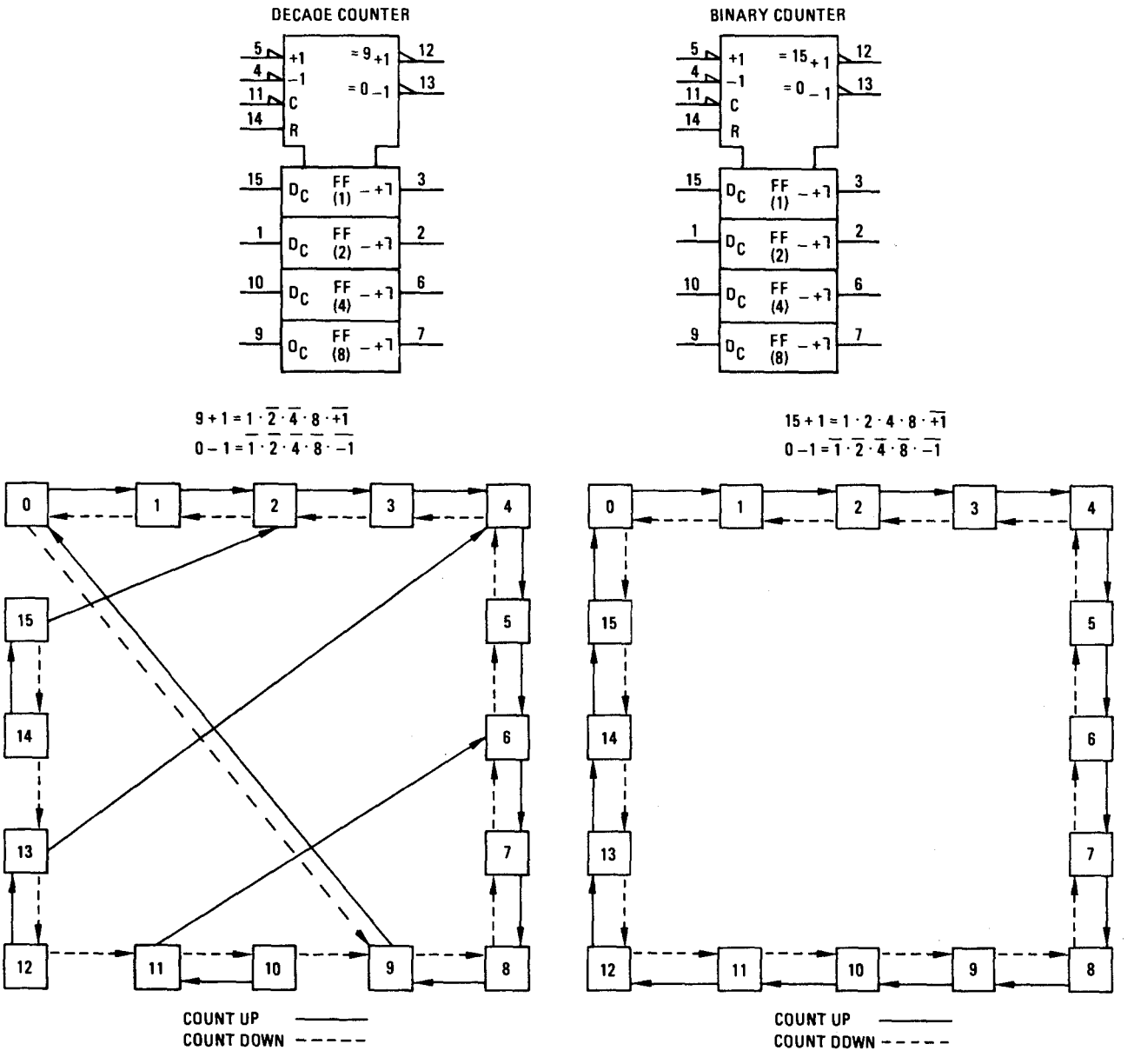

MODE SELECTION SUMMARY (Both Counters)

R	C	+1	-1	Mode
H	x	x	x	Preset (Asyn.)
L	L	x	x	Preset (Asyn.)
L	H	H	H	No Change
L	H		H	Count Up
L	H	H		Count Down

H = HIGH Level X = Don't Care Condition
L = LOW Level = Clock Pulse

Figure 8-8. Programmable Counters

Digital Integrated Circuits and Symbols (cont'd)

appropriate state in the count sequence. The D_C inputs are inhibited when C is held high and have no effect on the counters.

8-43. The Terminal Count-Up (9_{+1} or 15_{+1}) or Terminal Count-Down (0_{-1}) outputs (carry and borrow respectively) allow multidecade counter operations without additional logic. The counters are cascaded by feeding the terminal count-up output to the count-up clock input and terminal count-down output to the count-down clock input.

8-44. The Terminal Count-Up outputs of the decade and binary counters are low when their count-up clock inputs are low and the counters are in state nine and fifteen respectively. Similarly, the Terminal Count-Down outputs are low when their count-down clock inputs are low and both counters are in state zero. Thus, when the decade counter is in state nine and the binary counter is in state fifteen and both are counting up, or both are in state zero and counting down, a clock pulse will change the counter's state on the rising edge and simultaneously clock the following counter through the appropriate active low terminal count output. There are two gate delays per state when these counters are cascaded.

8-45. The asynchronous Master Reset (R) input, when high, overrides all other inputs and clears the counters. Master Reset (R) overrides Parallel Load (C) input so that when both are activated the counters will be reset.

8-46. Decoder. There are two types of decoders used in the Power Meter: a 3-line to 8-line and a 4-line to 16-line decoder. Operation of both decoders is identical except for the number of input and output lines. Therefore only the operation of the 3-line to 8-line decoder is shown in the truth table in Figure 8-9.

8-47. Data Selector (Multiplexer). There are two types of data selectors used in the Power Meter: an 8-input data selector and a 16-input data selector. The operation of both data selectors are identical except for the number of inputs. Therefore only the operation of the 8-input data selector is described and the symbol shown in Figure 8-10. One of the 8-input lines (0 through 7) is selected by the SEL output (GO through 7). The strobe input (G8) must be low in order to enable the output lines. If the strobe input is high, the output lines are inhibited and present a high impedance. This circuit uses Three State logic so that the outputs may be connected into a "wired OR" configuration.

8-48. Display Driver. The display driver (Figure 8-11) accepts a 4-bit binary code and provides output drive to light the appropriate segments of a 7-segment numeric display. The decode format employed allows generation of numeric codes O through 9 as well as other codes shown in the truth table in Figure 8-11.

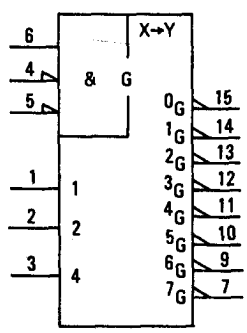

Truth Table

Inputs				outputs
Gate Enable			Select Code	
PIN 6	PIN 4	PIN 5	1 2 4	7 6 5 4 3 2 1 0
X	H	L	x x x	H H H H H H H H
X	L	H	x x x	H H H H H H H H
L	X	X	x x x	H H H H H H H H
H	L	L	L L L	H H H H H H H L
H	L	L	L L H	H H H H H H L H
H	L	L	L H L	H H H H H L H H
H	L	L	L H H	H H H H L H H H
H	L	L	H L L	H H H L H H H H
H	L	L	H L H	H H L H H H H H
H	L	L	H H L	H L H H H H H H
H	L	L	H H H	L H H H H H H H

H = High, L = Low, X = Don't care condition.

Figure 8-9. 3-Line to 8-Line Decoder

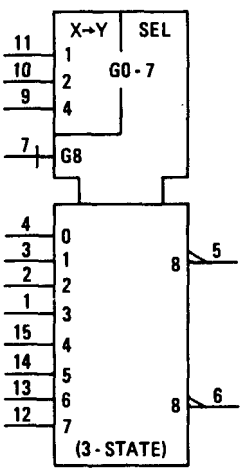

Truth Table

Inputs		Data Input Selected	Outputs	
X→Y Sel	Strobe			
1 2 4	(G_8)		PIN 5	PIN 6
X X X	H	X	Z	Z
L L L	L	0	0	0
L L H	L	1	1	1
L H L	L	2	2	2
L H H	L	3	3	3
H L L	L	4	4	4
H L H	L	5	5	5
H H L	L	6	6	6
H H H	L	7	7	7

H = High; L = Low; X = Don't care condition; Z - High impedance

Figure 8-10. 8-Input Data Selector (Multiplexer)

8-49. Latches on the four data inputs are controlled by the gate (G2) input. When G2 is low, the states of the outputs are determined by the input data code. When G2 goes high, the last data code present at the input to the latches is stored and the output remains stable.

8-50. The display driver also has provision for automatic blanking and zero suppression via the ripple blanking input, RBI, (G1) and the ripple blanking output (RBO), respectively. The G1 line always serves as an input; the RBO line typically serves as an output but it can also be configured as an input (G3) by connecting it to an external drive source. When G3 is held low by an external source, it overrides all other inputs to the display driver and causes the display driver to provide blanking outputs to all segments of the associated display.

8-51. When the RBO line is not connected to an external drive source it serves as a blanking output which is controlled by G1. As shown on the truth table in Figure 8-11, the combination of a low G1 and a binary O code causes the display driver to set the RBO low and to provide blanking outputs to all segments of the associated display. For zero suppression, the RBI (G1) input associated with the most significant digit is grounded and the RBO output is connected to the G1 input of the next significant digit. Using this configuration a number such as 0010 would be displayed as 10.

8-52. Numeric Display. The numeric display consists of eight individual light emitting diodes (LED) which share a common anode input. Seven of the LEDs, designated a through g, are arranged to form a seven-segment display as shown in Figure 8-12. The eighth LED, designated dp, provides a left-hand decimal point display. Each segment is lighted individually by a low input to the cathode pin (a through g and dp) of the LEDs.

8-53. Read Only Memories (ROMs). The Read Only Memories (ROMs) used in the Power Meter fall into two separate logic families: TTL and MOS. As shown in Figure 8-13, the only significant differences between the two types of ROMs are the power requirements and the amount of program storage. The power requirements for each family are provided in Table 8-1. Storage capacity for the TTL ROM is 32 8-bit words (256 bits); for the MOS ROM, storage capacity increases to 256 16-bit words (4096 bits).

8-54. When the ROMs are initially programmed, each 8- or 16-bit word is stored at a predetermined address. During subsequent operation, selection of the desired word is accomplished by applying the appropriate address code to the X→Y inputs. (In the Power Meter, the gate (G) input on the TTL ROMs is not used; it is tied to ground to keep the ROMs continuously enabled.) The specific program associated with each ROM is listed adjacent to the Service Sheet schematic on which the ROM is shown.

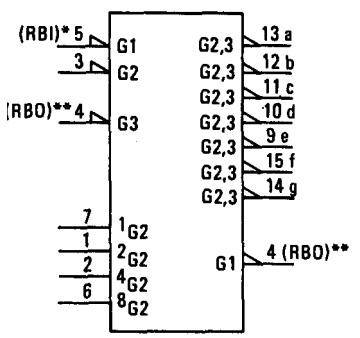

Truth Table

Binary Data Input	Inputs								Outputs								Display
	Control			Data													
	G1	G2	G3	8	4	2	1		a	b	c	d	e	f	g	RBO	
-	*	H	**	X	X	X	X		← STABLE →							H	STABLE
0	L	L	**	L	L	L	L		H	H	H	H	H	H	H	L	BLANK
0	H	L	**	L	L	L	L		L	L	L	L	L	L	H	H	0
1	X	L	**	L	L	L	H		H	L	L	H	H	H	H	H	1
2	X	L	**	L	L	H	L		L	L	H	L	L	H	L	H	2
3	X	L	**	L	L	H	H		L	L	L	L	H	H	L	H	3
4	X	L	**	L	H	L	L		H	L	L	H	H	L	L	H	4
5	X	L	**	L	H	L	H		L	H	L	L	H	L	L	H	5
6	X	L	**	L	H	H	L		L	H	L	L	L	L	L	H	6
7	X	L	**	L	H	H	H		L	L	L	H	H	H	H	H	7
8	X	L	**	H	L	L	L		L	L	L	L	L	L	L	H	8
9	X	L	**	H	L	L	H		L	L	L	H	H	L	L	H	9
10	X	L	**	H	L	H	L		H	H	H	H	H	H	L	H	- (dash)
11	X	L	**	H	L	H	H		L	H	H	L	L	L	L	H	E
12	X	L	**	H	H	L	L		H	L	L	HL	L	L	H		H
13	X	L	**	H	H	L	H		H	H	H	L	L	L	H	H	L
14	X	L	**	H	H	H	L		L	L	H	H	L	L	L	H	P
15	X	L	**	H	H	H	H		H	H	H	H	H	H	H	H	BLANK
X	X	X	L	X	X	X	X		H	H	H	H	H	H	H	**	BLANK

H= HIGH; L= LOW; X= DON'TCARE CONDITION

***The G1 input will blank the display only if a binary zero is stored in the latches.**

****The RBO output (pin 4) when used as an input (G3) overrides all other input conditions.**

Figure 8-11. LED Display Driver

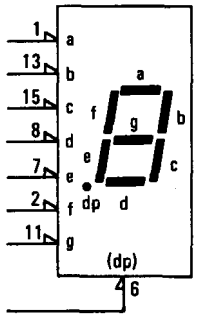

Truth Table

Inputs								Display
a	b	c	d	e	f	g	dp	
L	L	L	L	L	L	H	X	0
H	L	L	H	H	H	H	X	1
L	L	H	L	L	H	L	X	2
L	L	L	L	H	H	L	X	3
H	L	L	H	H	L	L	X	4
L	H	L	L	H	L	L	X	5
L	H	L	L	L	L	L	X	6
L	L	L	H	H	H	H	X	7
L	L	L	L	L	L	L	X	8
L	L	L	H	H	L	L	X	9
H	H	H	H	H	H	H	X	BLANK
X	X	X	X	X	X	X	L	•

H = high; L = low; X = Don't care condition.

Figure 8-12. Numeric Display

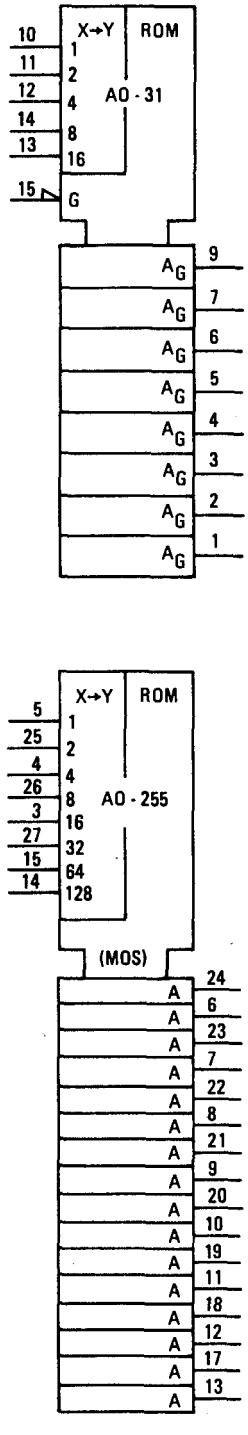

Figure 8-13. MOS and TTL ROMs

8-55. TROUBLESHOOTING

8-56. Since the Power Meter is a software controlled instrument, effective troubleshooting requires a thorough knowledge of both hardware operation and program execution. As an aid to this understanding, a general overview of Power Meter operation and troubleshooting rationale is provided in the Block Diagram Description associated with Service Sheets 1 through 5, detailed descriptions of the operating program are provided in Tables 8-3 and 8-6 and Figure 8-15, and circuit descriptions and troubleshooting data are provided as required on Service Sheets 6 through 15.

8-57. In addition to the information referenced above, this section also contains step-by-step verification procedures for a standard instrument, an HP-IB equipped instrument, and a BCD equipped instrument. Each of these procedures are designed to accomplish three major purposes. The first purpose is to exercise the stored program and the hardware circuits in a known sequence so that a fault condition can be readily isolated to a circuit group or to a segment of the stored program. The second purpose is to describe each check in sufficient detail to familiarize a maintenance technician with overall Power Meter operation. The third and most significant purpose is to indicate a logical troubleshooting entry point for program verification and signal tracing.

8-58. When the verification procedures are used as a basis for troubleshooting instruments equipped with either the HP-IB or BCD option, it is necessary that the standard instrument verification procedure be performed first to ascertain that the fault is not in the standard instrument circuits. After the standard instrument circuits are known to be operating properly, a fault can be readily isolated to a remote option circuit group, or to that segment of the operating program associated with remote operation.

8-59. Standard Instrument Checkout

8-60. A step-by-step procedure for verifying the operation of a standard instrument is provided in Table 8-3. Each step of the procedure directs that a specific function be verified and summarizes the program execution and/or circuit operation associated with the function. Each summary, in turn, is based on normal indications previously obtained. Thus, if the steps are performed in the order listed, an abnormal indication is directly related to a small segment of the operating program or to a specific circuit group. The information contained on the Service Sheets and in the Operating Program Flow Chart (Figure 8-15) can then be used to further isolate the problem. Typical examples of using the checkout procedure as a basis for troubleshooting are listed below.

8-61. Example 1: Abnormal Indication is Observed for Step 1. For this example, it is assumed that the power supplies are operating normally since troubleshooting of these circuits is straightforward (refer to Service Sheet 15). The first step in isolating any other type of fault is to determine whether the fault is in the ROM which contains the operating program, or whether it is one of the major circuit groups shown on Service Sheet 1. To isolate the fault, proceed as follows:

a. Look at the front-panel display while referrring to Figure 8-14 and try to determine what portion of the operating program that the fault is associated with. Note that the range and mode indications are generated at the start of the program cycle, the in-range/out-of-range status indications are generated next, then the digital readout is updated at the end of the program cycle. (When autoranging is enabled and an out-of-range conversion is detected, additional measurements are taken until an in-range conversion is detected, or until an out-of-range conversion is detected on the last range. Thus, the digital readout is not updated until after the last conversion of the program cycle.)

b. If the mode and range indications are abnormal, the fault occurs early in the program cycle and will affect circuit operation for the remainder of the cycle. Thus, the abnormal indication should be remedied before attempting any further analysis of Power Meter operation. To isolate the fault, proceed as follows:

1) Connect the logic analyzer (HP 1601A or equivalent) to the Power Meter as follows:

NOTE

Unless otherwise indicated, the logic analyzer is always connected

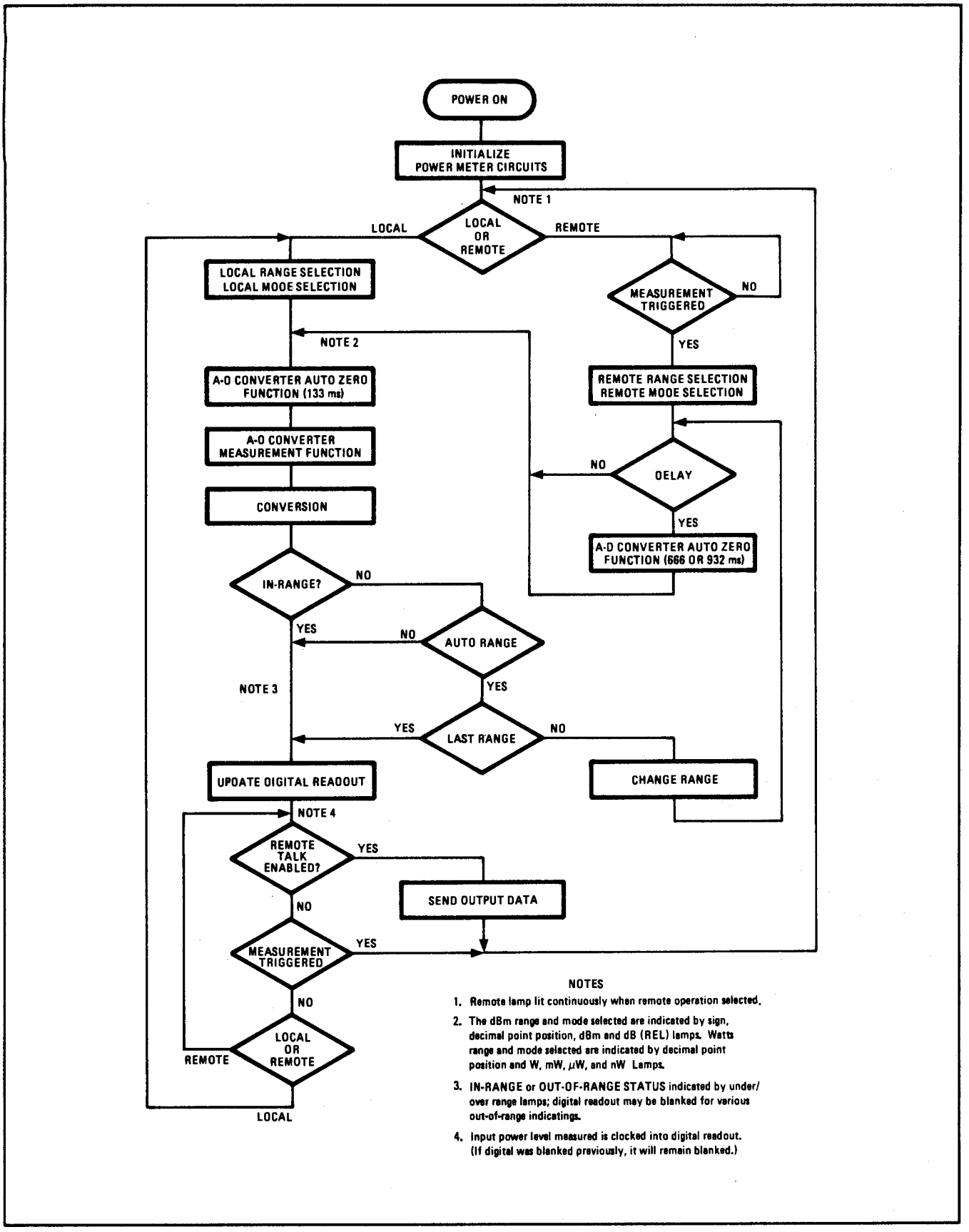

Figure 8-14. Power Meter Operating Cycle

TROUBLESHOOTING

Standard Instrument Checkout (cont'd)

Note cont'd)

as specified below for verifying program execution.

Logic Analyzer Input	Connect to:
DATA INPUTS BIT 0	A10TP1
DATA INPUTS BIT 1	A10TP2
DATA INPUTS BIT 2	A10TP3
DATA INPUTS BIT 3	A10TP4
DATA INPUTS BIT 4	A10TP5
DATA INPUTS BIT 5	A10TP6
DATA INPUTS BIT 6	A10TP7
DATA INPUTS BIT 7	A10TP8
DATA INPUTS GND	A10TP11
CLOCK INPUT	A10TP10

2) Set the logic analyzer controls as indicated below.

NOTE

Unless otherwise indicated, the logic analyzer controls are always set as specified below for verifying program execution.

DISPLAY	CLOCK: ⎍	THRESHOLD: TTL
LOGIG: POS	DISPLAY TIME: as desired.	
MARK: OFF BYTE: 3 BIT	**COLUMN BLANKING:** to display Bits 0 through 7.	

3) Observe the logic analyzer NO CLOCK indicators to verify that a Ø1 clock input is applied to the Controller. If either indicator is lit, refer to Service Sheet 9 for information covering checkout and troubleshooting of the Clock Generator Circuits. (Service Sheet 1 indicates that Program Clocks are applied to the Controller from the Counter and Clock Generator Circuits and that a detailed block diagram of these circuits is provided on Service Sheet 3. Service Sheet 3, in turn, indicates that a schematic of the Clock Generator Circuits is provided on Service Sheet 9.)

4) Move the logic analyzer CLOCK probe from A10TP10 to A9TP2 and observe the NO CLOCK indicators to verify that a Ø2 clock is applied to the Controller. If either indicator is lit, refer to Service Sheet 9 for information covering checkout and troubleshooting of the Clock Generator Circuits.

5) Return logic analyzer CLOCK probe to A10TP10 and set remaining logic analyzer controls as indicated below. These controls select the triggering of the logic analyzer and are adjusted as required to verify Power Meter , program execution.

DELAY SET: 00000

SAMPLE MODE: REPET

TRIGGER MODE: START DISPLAY

TRIGGER WORD: (switch settings specified select address 0528; qualitifer =1 or 0)

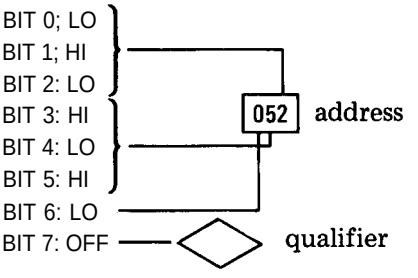

6) If the operating program is cycling normally, the NO TRIG indicator will be off and the logic analyzer will provide a 16-line display starting at address 052_8. The first two lines of the display should indicate that the YR3 qualifier associated with address 0528 is a logic 1, and that the YR2 qualifier associated with address 0558 is a logic 0. An explanation of how this status indication is derived can be found in Table 8-3 and 8-6 and in Figure 8-15. Table 8-6 indicates that the range counter was counted down to range 7 at address 034 of the Power Up subroutine, and to range 5 at address 0358. Figure 8-15 shows the qualifiers associated with these addresses and how the qualifiers are processed to control address branching and instruction generation. Table 8-2

Standard Instrument Checkout (cont'd)

describes the purpose and function of each qualifier and instruction. Thus, from the information contained in the tables and on the figure, it can be determined that after the Range Counter is counted down from range 5, the Mode Register is loaded, then the program branches to the Local/Remote Subroutine. Since Local operation is automatically selected when power is turned on, the next branch is to address 0528 of the Local Initialize subroutine. The Range Counter was counted down properly, the range qualifiers should be set to the following logic states: YR3 = H, YR2 = L, YR1 = H.

7) If a display is present on the logic analyzer, it verifies that the operating program is cycling normally and branching to address 0528 to initiate each cycle. With this fact established, its just a matter of signal tracing to find out exactly where the problem is. Refer to Service Sheet 3 and check the outputs of the Mode Register and Range Counter. If they're normal, trace out the signal lines to the Display Assembly to isolate the problem to a circuit. If the outputs of the Mode Register are abnormal, use the logic analyzer and an oscilloscope to isolate the problem to the ROM containing the program, the Instruction Register, the Front-Panel Switches, the Buffers, or the Mode Register and Gates (Service Sheet 3). If the outputs of the Range Counter are abnormal, turn power on and off while using the logic analyzer to check program execution and Range Counter operation during the Power Up Subroutine.

8) If no display is present on the logic analyzer, turn power on and off as required to verify program execution starting at address 000_8 of the power Up Subroutine.

c. If the mode and range indications are normal, check the output of the Amplifier, Demodulator, and Filter circuits at DC test point A3TP4. If it is abnormal, refer to Service Sheet 2 and check the YLOG and range select inputs to the circuit. If the YLOG and Range Select inputs are normal, use standard signal tracing techniques to isolate the problem. If they're abnormal, refer back to step b.

d. If the output of the Amplifier, Demodulator, and Filter circuit is normal, sync the logic analyzer on address 071_8 and check whether the A-D Converter. qualifier goes to logic 0 at 633 ± 160 clock pulses later. If no display can be obtained on the logic analyzer, turn power on and off and verify program execution starting at the Local Initialize Subroutine. If an erroneous display is observed, use the logic analyzer and an oscilloscope to isolate the problem to the ROM containing the program, the Instruction Register, the A-D Control Register and Gates, the A-D Converter, or the Counters. (The TRIGGER OUTPUT of the logic analyzer can be used to sync the oscilloscope at any address.)

e. If the conversion described in step d is proper, check that an LCOR instruction is generated at address 0728 and that an LTC instruction is generated to load the Display Register at address 1778. If both of these instructions are generated properly, use standard signal tracing techniques to isolate the problem to the Under/Over-Range Decoder, the Main Counter, or the Display Assembly.

8-62. Example 2: Abnormal Indication is Observed for Step 8. This example was chosen because it illustrates Power Meter autoranging during a program cycle. When the RANGE HOLD switch is released for step 8, an LCRD instruction should be generated during the Under Range Subroutine to count the Range Counter down to range 4, then an LSOR instruction should be generated to blank the front-panel digital readout (refer to Service Sheet 3, Linear Under-Range Conversion). The range 4 output of the Range Counter, in turn, should cause the True-Range Decoder to change the digital readout decimal point position, and should also select higher gain operation of the Amplifier, Demodulator, and Filter circuit. Thus, the input voltage to the A-D Converter at DC test point A3TP4 should rise to 0.980 Vdc by the time that the subsequent Auto Zero Subroutine is completed. Program execution and circuit operation from this point on was verified in steps 1 through 7. The key step in isolating an abnormal indication then, is to check that the output of the Amplifier, Demodulator, and Filter circuit rises to the specified value by the end of the Auto Zero Subroutine which follows the Under Range Subroutine. The main reason for making this check

Standard Instrument Checkout (cont'd)

first is that if the output of the Amplifier, Demodulator, and Filter circuit does not rise to an in-range level by the end of the Auto Zero Subroutine, a range 4 under-range conversion will be detected. A second Under Range Subroutine will then be executed to count the Range Counter down to range 3 and the range 3 output of the Range Counter will change the output of the True-Range Decoder and the gain of the Amplifier, Demodulator, and Filter circuit a second time. Depending on the type of failure present, either an under-range conversion or an over-range conversion could be detected for range 3. Thus, for this type of problem, neither the final range that the Power Meter will settle on nor the resultant front-panel indication can be predicted.

8-63. To isolate a step. 8 abnormal indication proceed as follows:

a. Check the output of the Range Counter to determine what range the Power Meter settles on. If the Power Meter settles on range 4, sync the logic analyzer on address 052_8 as described in Example 1 to determine whether the operating program is cycling. If the program is not cycling, turn off power and reestablish the conditions of step 7. Then turn power back on, release the RANGE HOLD switch, and verify program execution starting at the Under Range Subroutine.

b. If the Power Meter has settled on range 4 and the operating program is cycling normally, refer to Service Sheets 2 and 3 and isolate the problem to the True-Range Decoder, the Amplifier, Demodulator, and Filter circuit, the Over/Under-Range Decoder, or the Display Assembly.

Table 8-2. Program Mnemonic Descriptions (1 of 5)

Mnemonic	Service Sheet	Subroutine	Description
		PROGRAM QUALIFIER INPUTS	
NAUTO	3,4,5,6,10,11, 13	Remote Initialize Under Range Over Range	When low, enables Power Meter to automatically select most accurate measurement range. When high, causes Power Meter to hold last range selected, either locally or remotely.
YH1 YH2 YH4 YH8	2,3,4, 5,6,9 10, 12	Linear, Positive - Conversion (YH1, YH2 only) Linear, Negative - Conversion (YH1, YH2 only) Log Conversion (all)	Main counter hundreds output (BCD).
YK1	2,3,4, 5,6,9, 10, 12	Remote Initialize Measurement should be Linear, Positive-Conversion Linear, Negative-Conversion	Least significant digit of main counter thousands output (BCD).
YK8	3, 9 10	Power Up Auto Zero Delay	Most significant digit of main counter thousands output (BCD).

Table 8-2. Program Mnemonic Descriptions (2 of 5)

Mnemonic	Service Sheet	Subroutine	Description
YMl YM2	3, 10	Remote Initialize Measurement Relative dB Over/Under Range Continue	Two-bit code which selects measurement mode as follows: YM2 YM1 Mode 1 1 dBm o 1 dB Rel 1 0 Watts o 0 dB Ref (dB [REF] switch pressed)
YPLS	2, 3, 8, 10	Measurement Linear, Positive-Conversion Linear, Negative-Conversion Log Conversion	A-D converter output. During measurement subroutine, indicates whether A-D input is above or below A-D threshold (YPLS high or low, respectively). During conversion subroutines, changes state when A-D converter discharges through threshold.
YR1 YR2 YR3	2, 3, 4 5, 7, 10 12, 13	Power Up Remote Initialize Local Initialize Under Range (YR2, YR3 only) Over Range	Three-bit code which selects measurement range as follows: YR3 YR2 YR1 Range 0 0 0 0 (Remote only) 0 0 1 1 0 1 0 2 0 1 1 3 1 0 0 4 1 0 1 5 1 1 0 6 (Invalid; Power Meter 1 1 1 7 automatically selects range 5 even if NAUTO high)
YRMT (DACQ)	3, 4, 5 10,11,13	Display and Remote Talk	Remote input. When HP-IB option installed, serves as 1/0 transfer control signal (refer to description and timing diagram provided under Principles of Operation). When BCD interface option installed, functions in conjunction with YRMT (FAST) to select measurement rate (see below).
YRMT (FAST)	3, 4, 5 10,11,13	Remote Initialize Delay	Remote input. When HP-IB option installed, functions in conjunction with YRMT (HOLD) to select measurement rate as indicated below. When BCD interface option installed, functions in conjunction with YRMT (DACQ) to select measurement rate as indicated below. FAST HOLD/DACQ Measurement Rate X low (level) Disabled (hold) high high (pulse) trigger (with settling time) low high (pulse) trigger (immediate) high high (level) free run (at maximum rate) low high (level) free run (with settling time)

Table 8-2. Program Mnemonic Descriptions (3 of 5)

Mnemonic	Service Sheet	Subroutine	Description
YRMT (HOLD)	3, 4, 5 10, 11, 13	Local/Remote Branch Display and Remote Talk	Remote input. When HP-IB option installed, functions in conjunction with YRMT (FAST) to select measurement rate as indicated above. Hardwired high when BCD interface option installed.
YRMT (MORE DATA)	3, 4, 5, 10,11,13	Display and Remote Talk	Remote talk 1/0 transfer control signal associated with HP-IB option. Set low at start of talk cycle to indicate that last word of data message not sent to external controller; reset high at end of talk cycle. Hardwired low when BCD interface option installed.
YRMT (REMOTE)	3, 4, 5 10,11,13	Local/Remote Branch Delay Display and Remote Talk	Remote input. When low, selects local operation of Power Meter; when high, selects remote operation of Power Meter
YRMT (RFDQ)	3, 4, 5, 10,11,13	Display and Remote Talk	Remote talk 1/0 transfer control signal associated with HP-IB option (refer to description and timing diagram provided under Principles of Operation). Hardwired low when BCD interface option installed.
YRMT (TALK)	3, 4, 5, 10,11,13	Display and Remote Talk	Remote talk enable input associated with HP-IB option; set low by external controller to request output data from Power Meter. Hardwired low when BCD interface option installed.
NZRO	3,9,10	Relative dB	Relative counter status output. Goes low to indicate that contents of relative counter are equal to 0.
		INSTRUCTIONS	
LAZ	3, 10	Power Up Local/Remote Branch Remote Initialize Auto Zero Delay Display and Remote Talk	Sets A-D auto-zero register thereby enabling A-D converter auto-zero loop.
LCKM	3, 10	Power Up Remote Initialize Local Initialize	Loads mode select bits into mode register.

Table 8-2. Program Mnemonic Descriptions (4 of 5)

Mnemonic	Service Sheet	Subroutine	Description
LCLR	3, 9, 10	Power Up Remote Initialize Auto Zero Measurement Over/Under Range Continue Delay	Sets sign register (sign +) and clears main counter.
LCNT	3,9,10	Power Up Remote Initialize Auto Zero Measurement Linear, Positive- Conversion Linear, Negative- Conversion Log Conversion Relative dB Delay	Enables one up/down clock pulse to main counter.
LCOR	3,9,10	Linear, Positive- Conversion Linear, Negative- Conversion Log Conversion Relative dB	Clears over-range and under-range flip-flops and loads contents of reference register into relative counter.
LCRD	10	Power Up Remote Initialize Local Initialize Under Range	Counts range counter down one range.
LCRU	10	Power Up Over Range	Counts range counter up one range.
LINP	3, 10	Measurement	Sets 1/2 of A-D conversion control register, thereby enabling A-D converter to charge to input voltage level.
LLRA	3, 9, 10	Remote Initialize	Loads remote range select inputs into range register.
LLRE	3, 9, 10	Power Up Relative dB Over/Under Range Continue	Loads contents of main counter into reference register.
LPSC	3, 9, 10	Measurement	Loads true-range counter and sign preset inputs into main counter and sign register, respectively.

Table 8-2. Program Mnemonic Descriptions (5 of 5)

Mnemonic	Service Sheet	Subroutine	Description
LREL	3, 9, 10	Relative dB	Serves as down clock to relative counter, and as steering input to main counter up/down count control logic.
LRMP	3, 10	Measurement Linear, Positive-Conversion Linear, Negative-Conversion Log Conversion	Sets 1/2 of A-D conversion control register. Output of register is then gated with various status signals to enable A-D converter conversion ramp as follows: Linear Positive Conversion Ramp - enabled when Watts mode selected and A-D input voltage exceeds threshold. Linear Negative-Conversion Ramp - enabled when Watts mode selected and A-D input voltage is below threshold. Log Conversion Ramp and Log Reference - enabled when dBm, or dB Rel mode selected.
LSDAV	3, 10, 11 13	Display and Remote Talk	Remote talk 1/0 transfer control signal (refer to description and timing diagram provided under Principles of Operation.
LSOR	3, 10	Power Up Measurement Under Range Over Range	Sets overrange flip-flop to provide blanking output to display, and, if under range flip-flop is reset, to light OVER RANGE lamp.
LSUR	3, 10	Measurement Under Range	Sets underrange flip-flop to light UNDER RANGE lamp.
LTC	2, 3, 4, 6, 11, 13	Power Up Display and Remote Talk	Clocks display sign flip-flop and loads sign and contents of main counter into display registers.

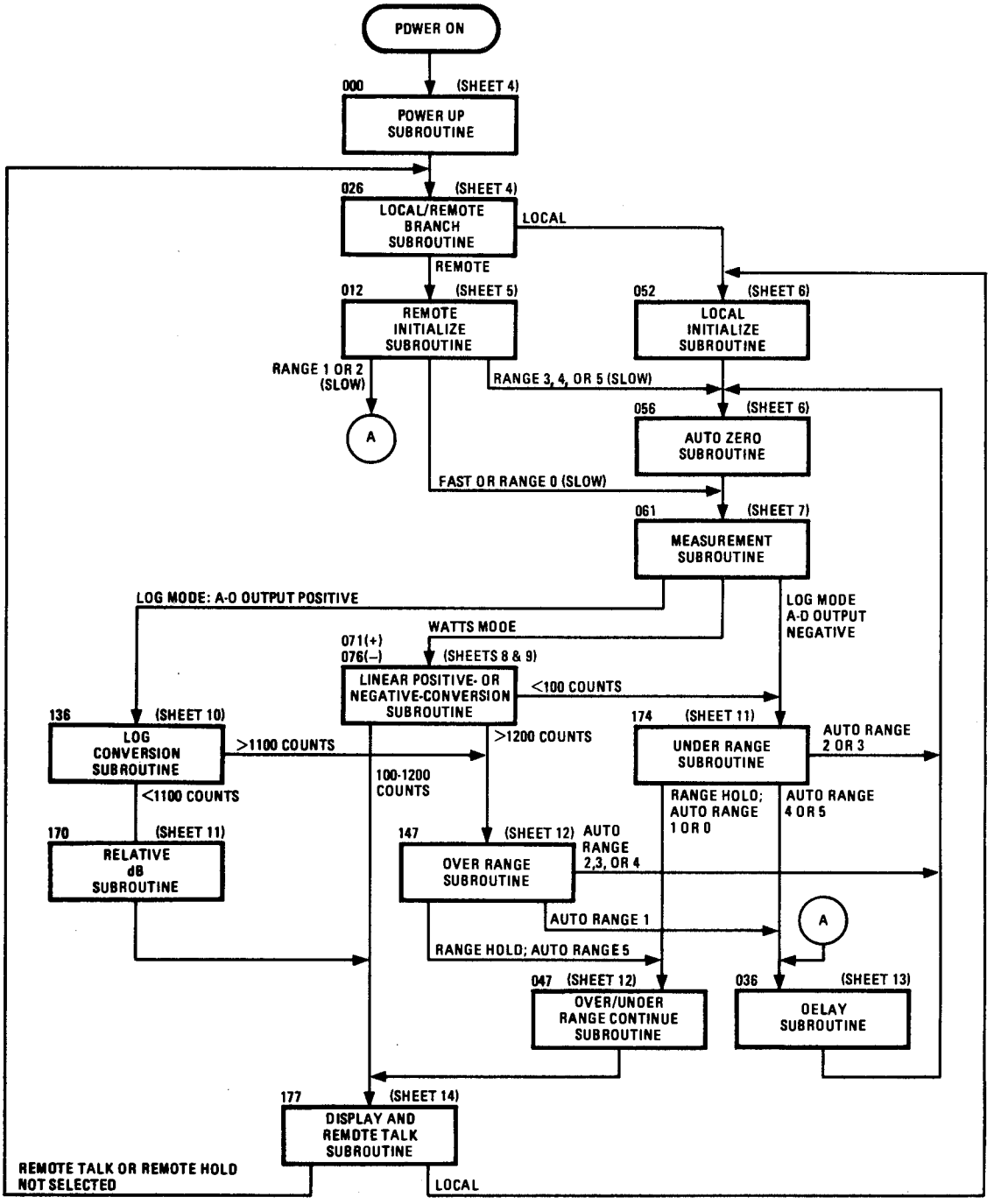

Figure 8-15. Operating Program Flow Chart (1 of 14)

2

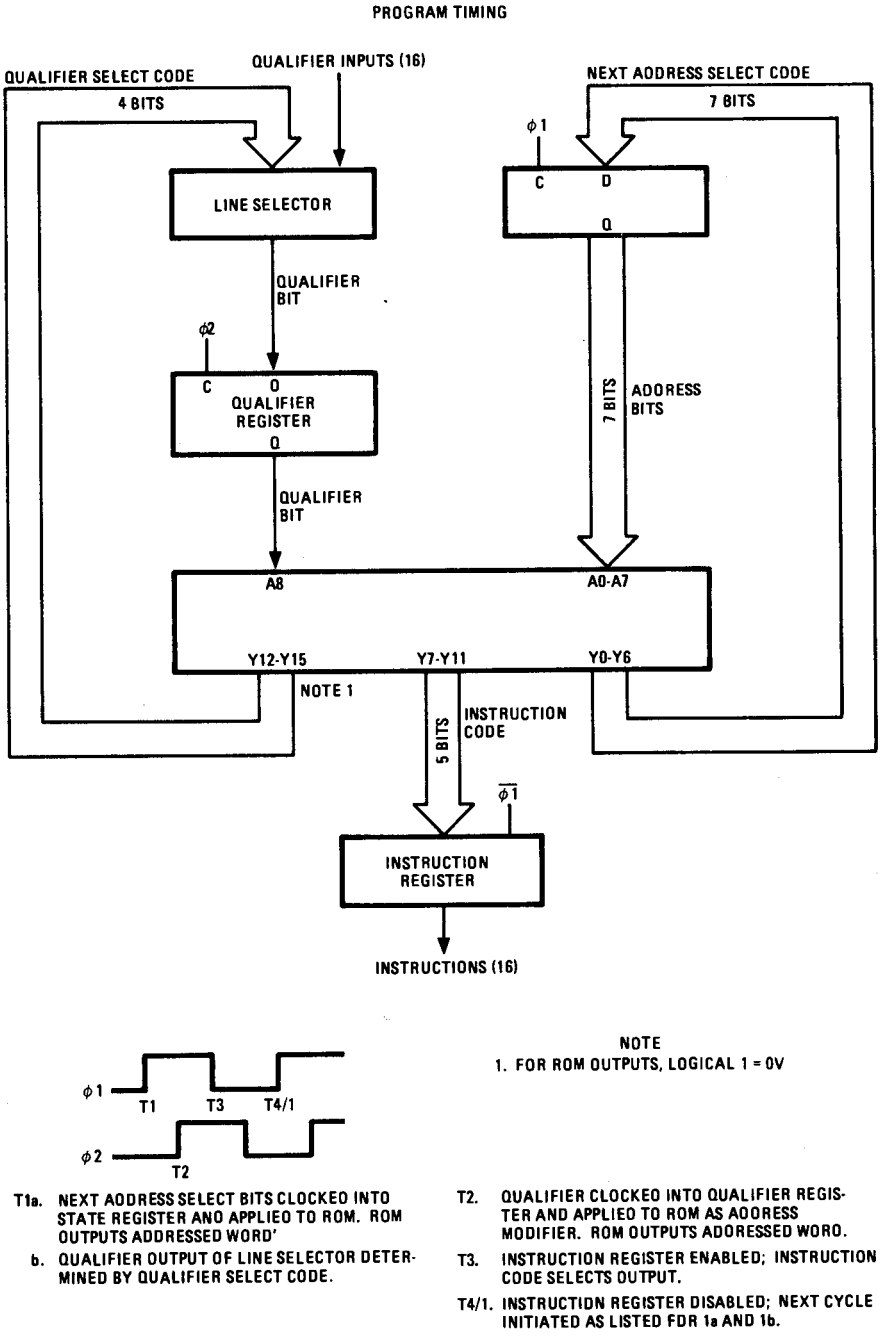

Figure 8-15. Operating Program Flow Chart (2 of 14)

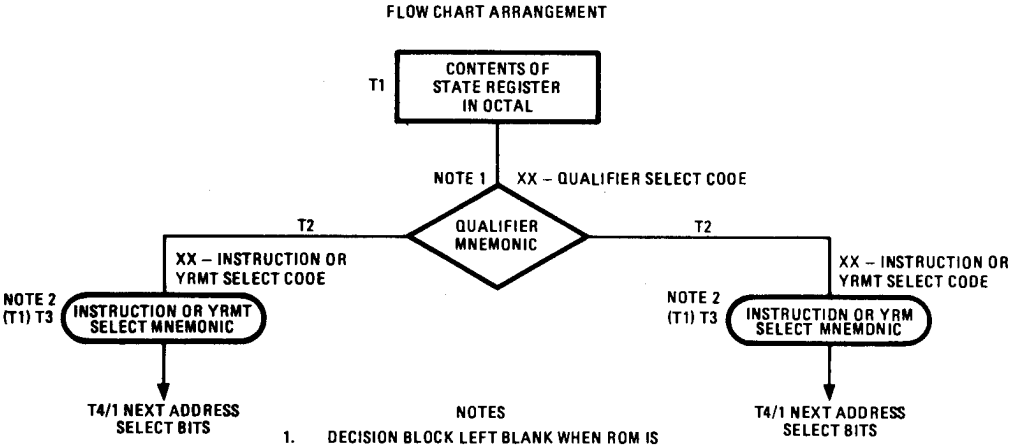

NOTES

1. DECISION BLOCK LEFT BLANK WHEN ROM IS PROGRAMMED TO PROVIDE SAME OUTPUT FOR EITHER 1 OR 0 QUALIFIER STATE.
2. WHEN A YRMT SELECT CODE IS GENERATED AT T1, INSTRUCTION REGISTER IS DISABLED AND STATE OF YRMT LINE AT T2 DETERMINES NEXT ADDRESS AT T4/1.

QUALIFIER SELECT CODES

Y_{15}	Y_{14}	Y_{13}	Y_{12}		
0	0	0	0	+5V	(0_8)
0	0	0	1	YH1	(1_8)
0	0	1	0	YH2	(2_8)
0	0	1	1	YH4	(3_8)
0	1	0	0	YH8	(4_8)
0	1	0	1	YK1	(5_8)
0	1	1	0	YK8	(6_8)
0	1	1	1	YPLS	(7_8)
1	0	0	0	NRZD	(10_8)
1	0	0	1	YR1	(11_8)
1	0	1	0	YR2	(12_8)
1	0	1	1	YR3	(13_8)
1	1	0	0	NAUTO	(14_8)
1	1	0	1	YM1	(15_8)
1	1	1	0	YM2	(16_8)
1	1	1	1	YRMT	(17_8)*

*YRMT IS A MULTIPLEXED QUALIFIER LINE. INSTRUCTION CODE SELECTS OUTPUT OF MULTIPLEXER.

INSTRUCTION CODES

Y_{11}	Y_{10}	Y_9	Y_8	Y_7		
0	0	0	0	0	LSDAV	(0_8)
0	0	0	0	1	LAZ	(1_8)
0	0	0	1	0	LINP	(2_8)
0	0	0	1	1	LRMP	(3_8)
0	0	1	0	0	LREL	(4_8)
0	0	1	0	1	LSDR	(5_8)
0	0	1	1	0	LSUR	(6_8)
0	0	1	1	1	LCRU	(10_8)
0	1	0	0	0	LCOR	(7_8)
0	1	0	0	1	LCRD	(11_8)
0	1	0	1	0	LCRA	(12_8)
0	1	0	1	1	LCKM	(13_8)
0	1	1	0	0	LLRE	(14_8)
0	1	1	0	1	LCLR	(15_8)
0	1	1	1	0	LPSC	(16_8)
0	1	1	1	1	LTC	(17_8)
1	0	0	0	0	SAME AS ABOVE	
		THRU			EXCEPT LCNT ALSO	
1	0	1	1	1	GENERATED TO CLOCK MAIN COUNTER	

*YRMT SELECT CODES

1	1	0	0	0	DISABLE
1	1	0	0	1	SELECT LDAV (31_8) AS YRMT QUALIFIER
1	1	0	1	0	SELECT LTALK (32_8) " "
1	1	0	1	1	SELECT HMOT (33_8) " "
1	1	1	0	0	SELECT LRFDQ (34_8) " "
1	1	1	0	1	SELECT LFAST (35_8) " "
1	1	1	1	0	SELECT LHOLD (36_8) " "
1	1	1	1	1	SELECT LREMOTE (37_8) " "

Figure 8-15. Operating Program Flow Chart (3 of 14)

4a

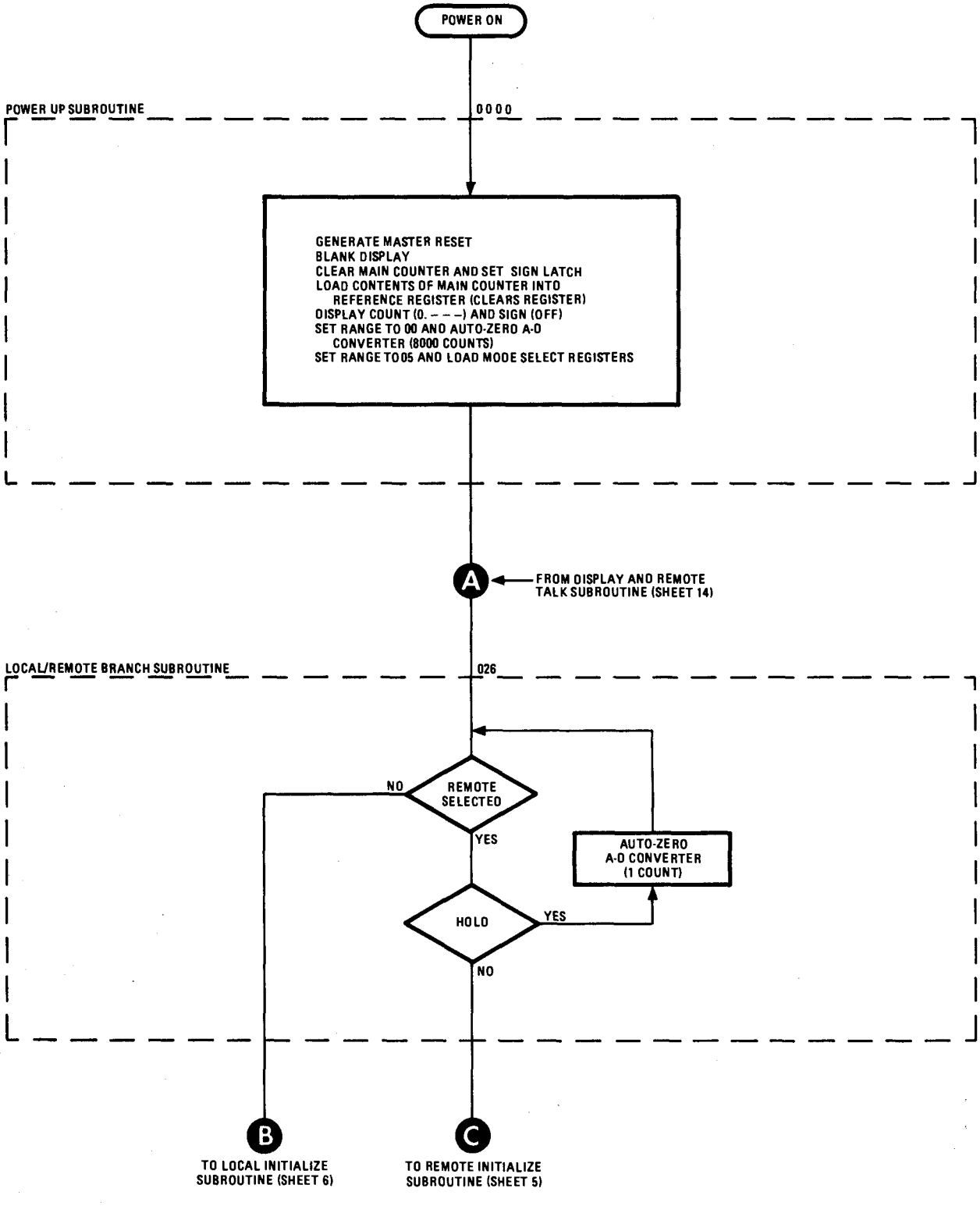

Figure 8-15. Operating Program Flow Chart (4A of 14)

4b

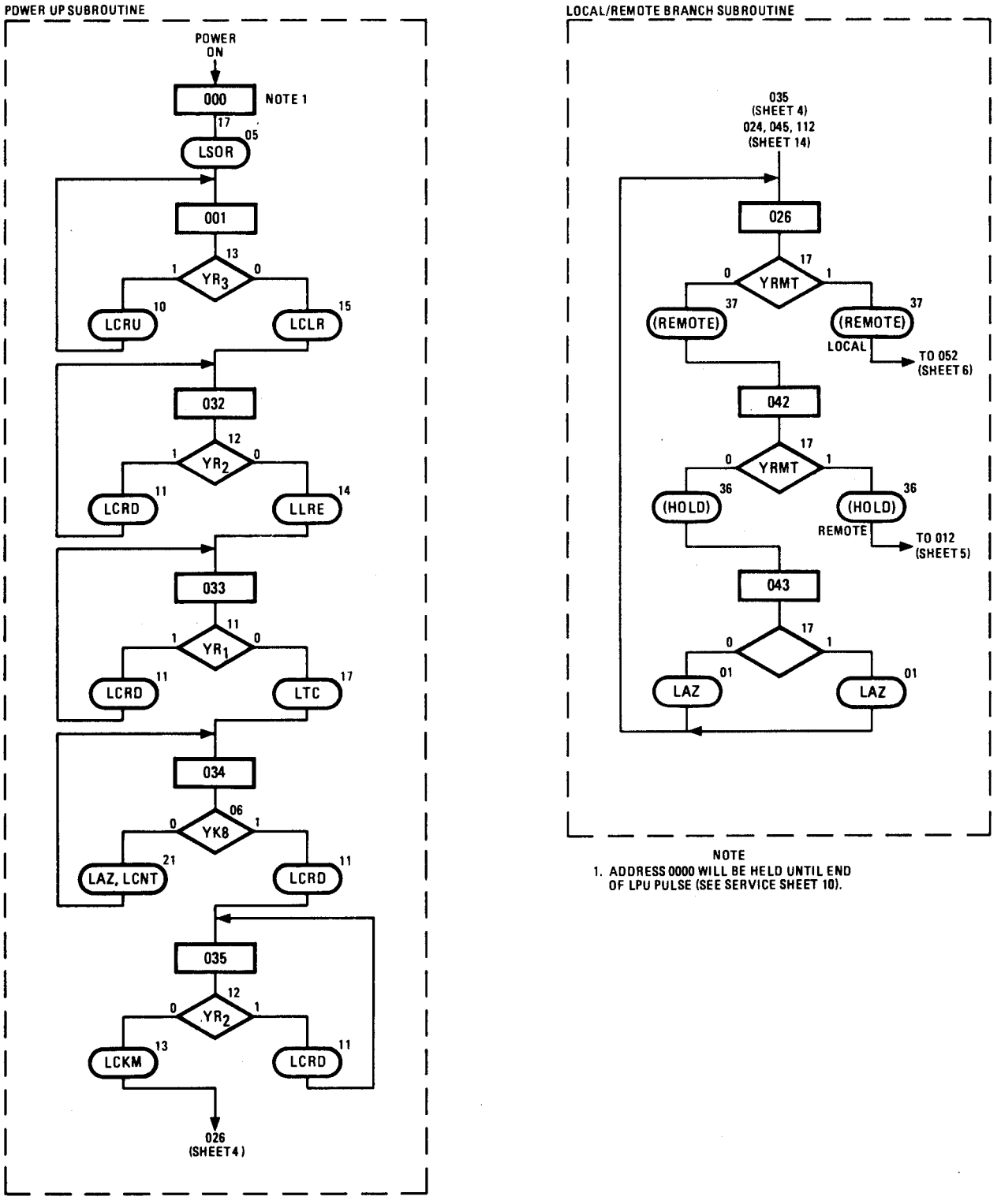

Figure 8-15. Operating Program Flow Chart (4B of 14)

5a

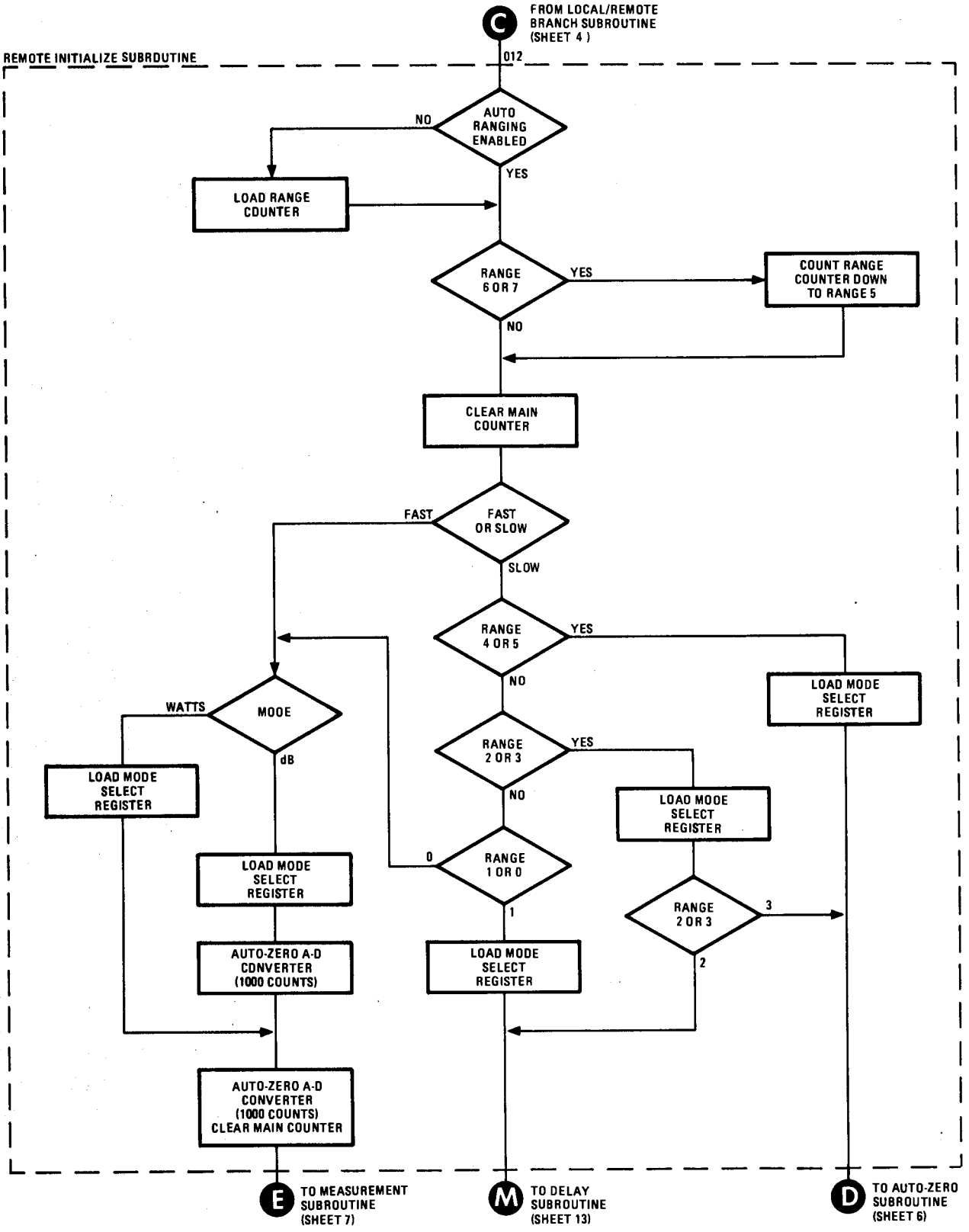

Figure 8-15. Operating Program Flow Chart (5A of 14)

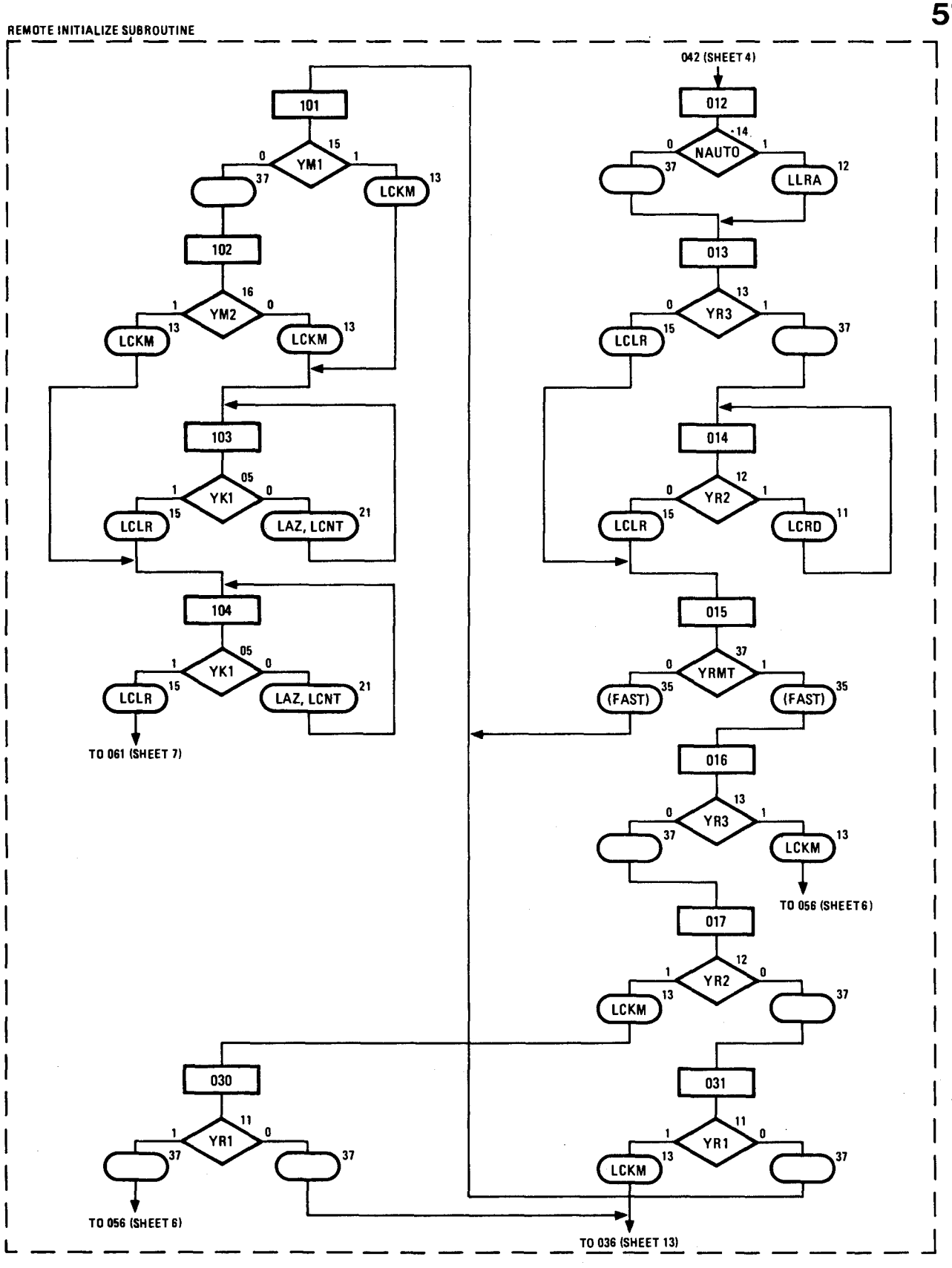

Figure 8-15. Operating Program Flow Chart (5B of 14)

6a

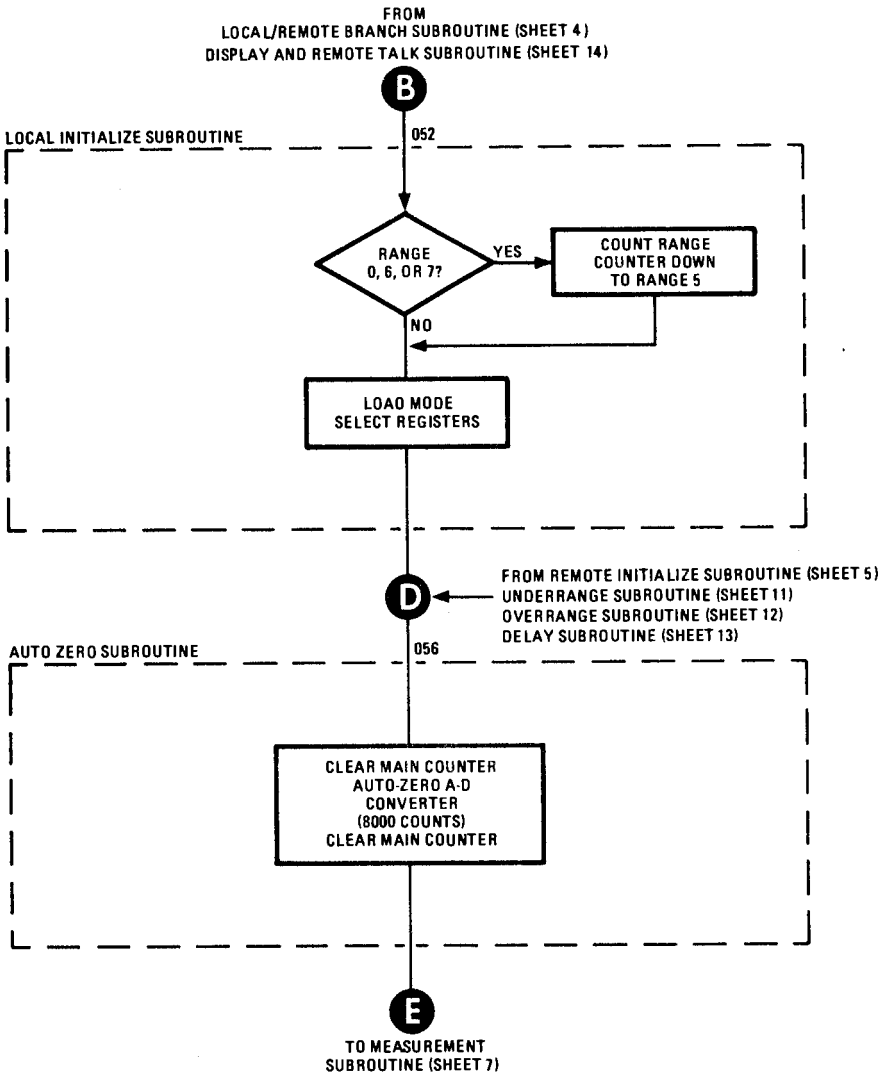

Figure 8-15. Operating Program Flow Chart (6A of 14)

6b

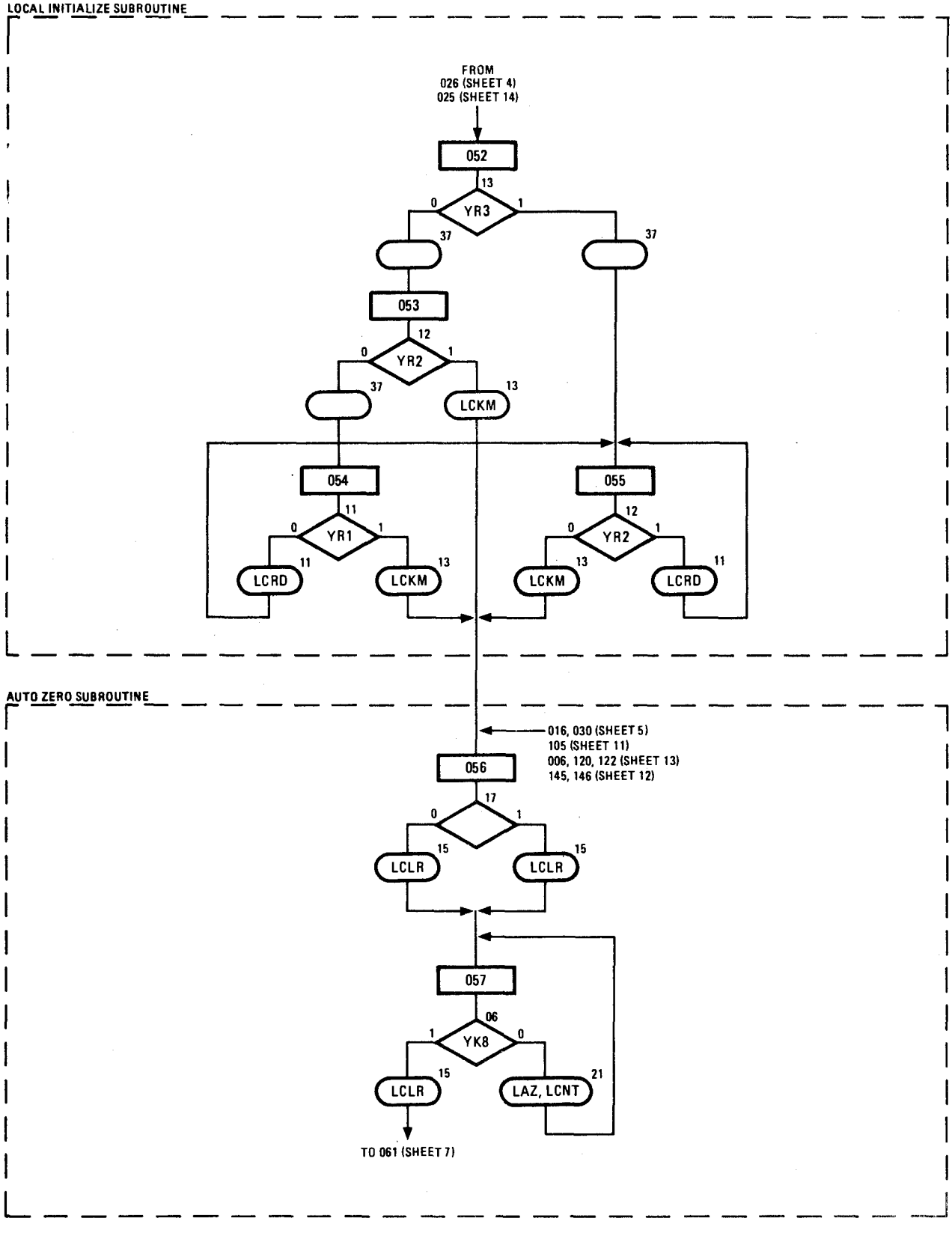

Figure 8-15. Operating Program Flow Chart (6B of 14)

7a

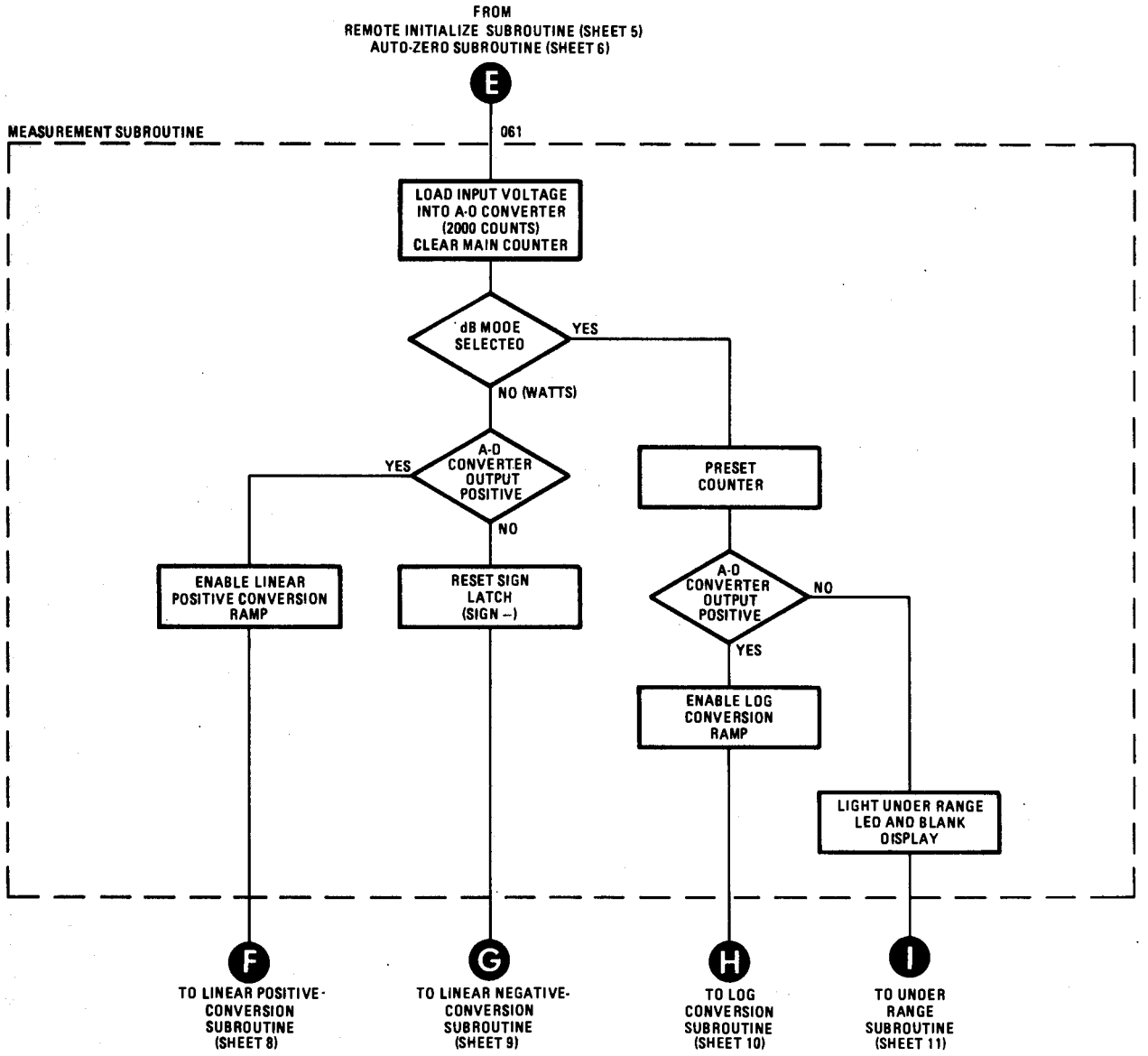

Figure 8-15. Operating Program Flow Chart (7A of 14)

7b

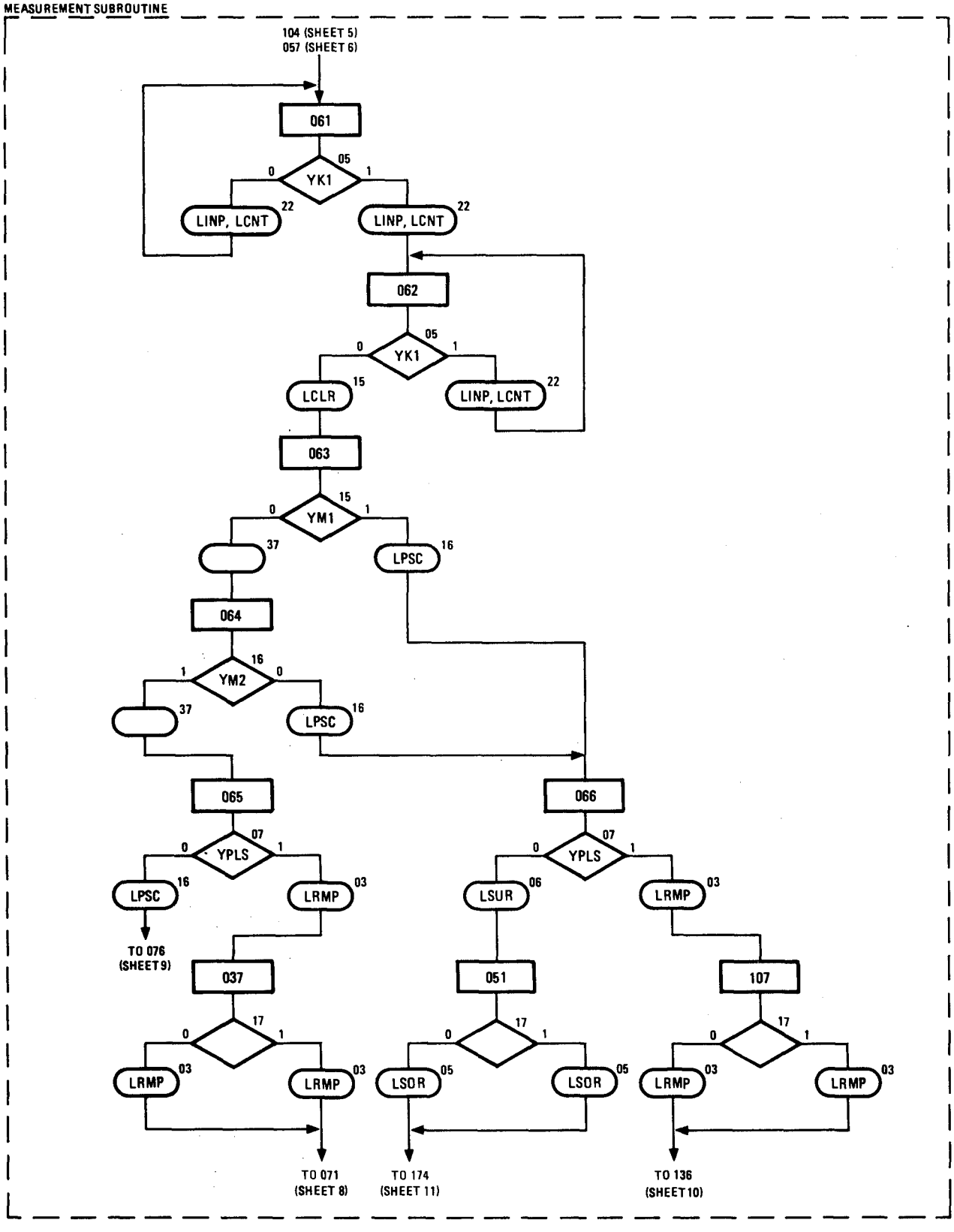

Figure 8-15. Operating Program Flow Chart (7B of 14)

8a

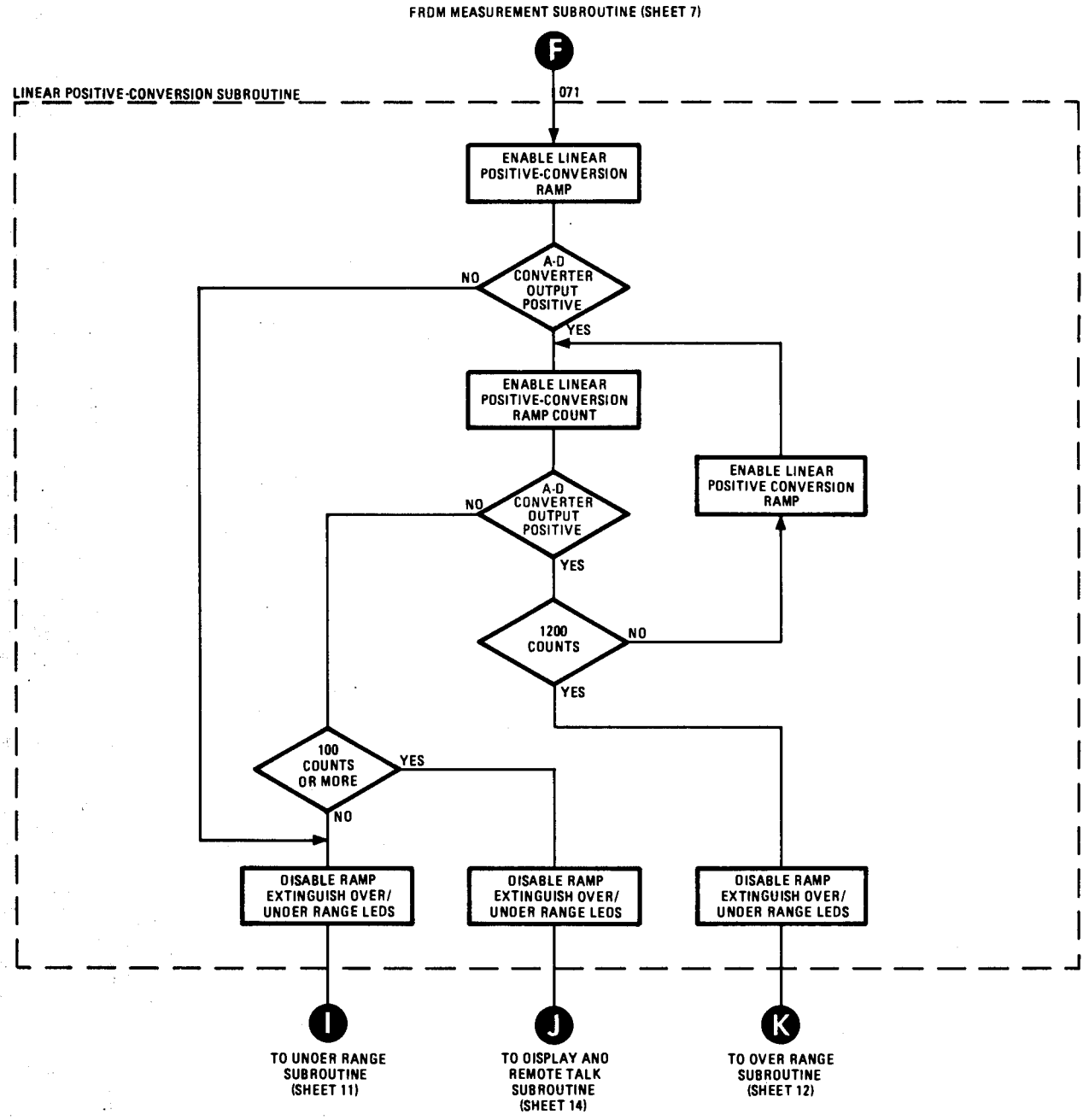

Figure 8-15. Operating Program Flow Chart (8A of 14)

8b

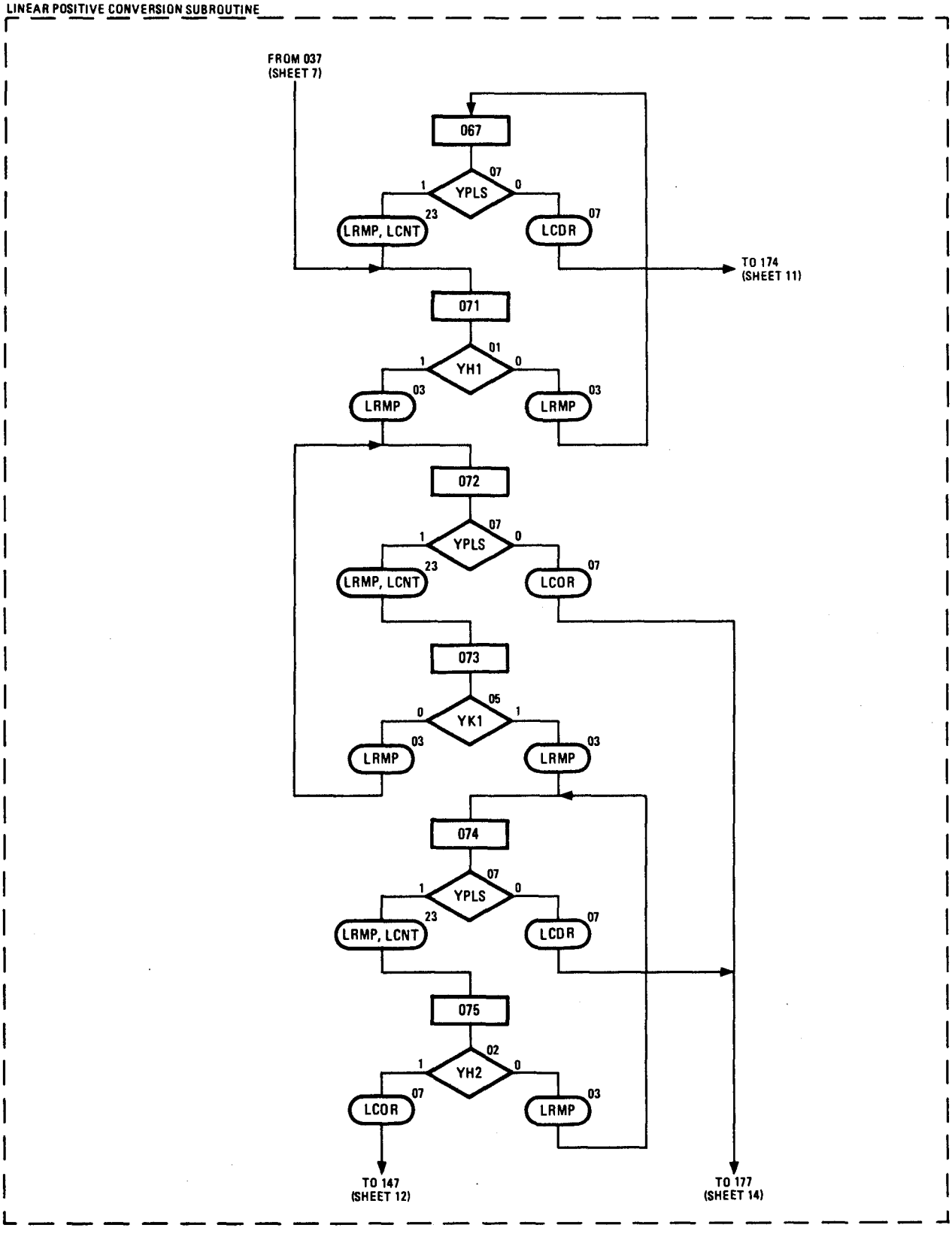

Figure 8-15. Operating Program Flow Chart (8B of 14)

9a

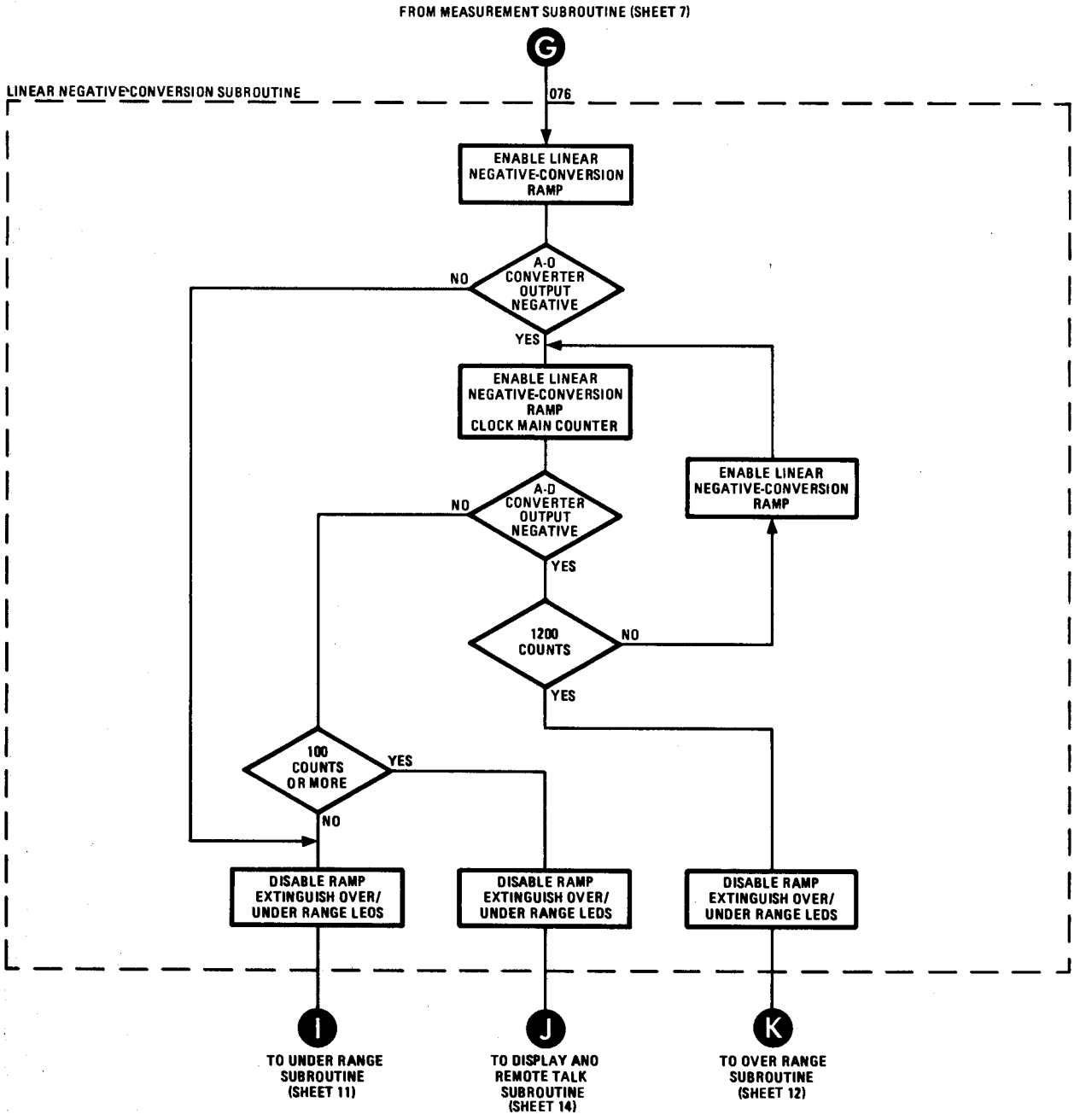

Figure 8-15. Operating Program Flow Chart (9A of 14)

9b

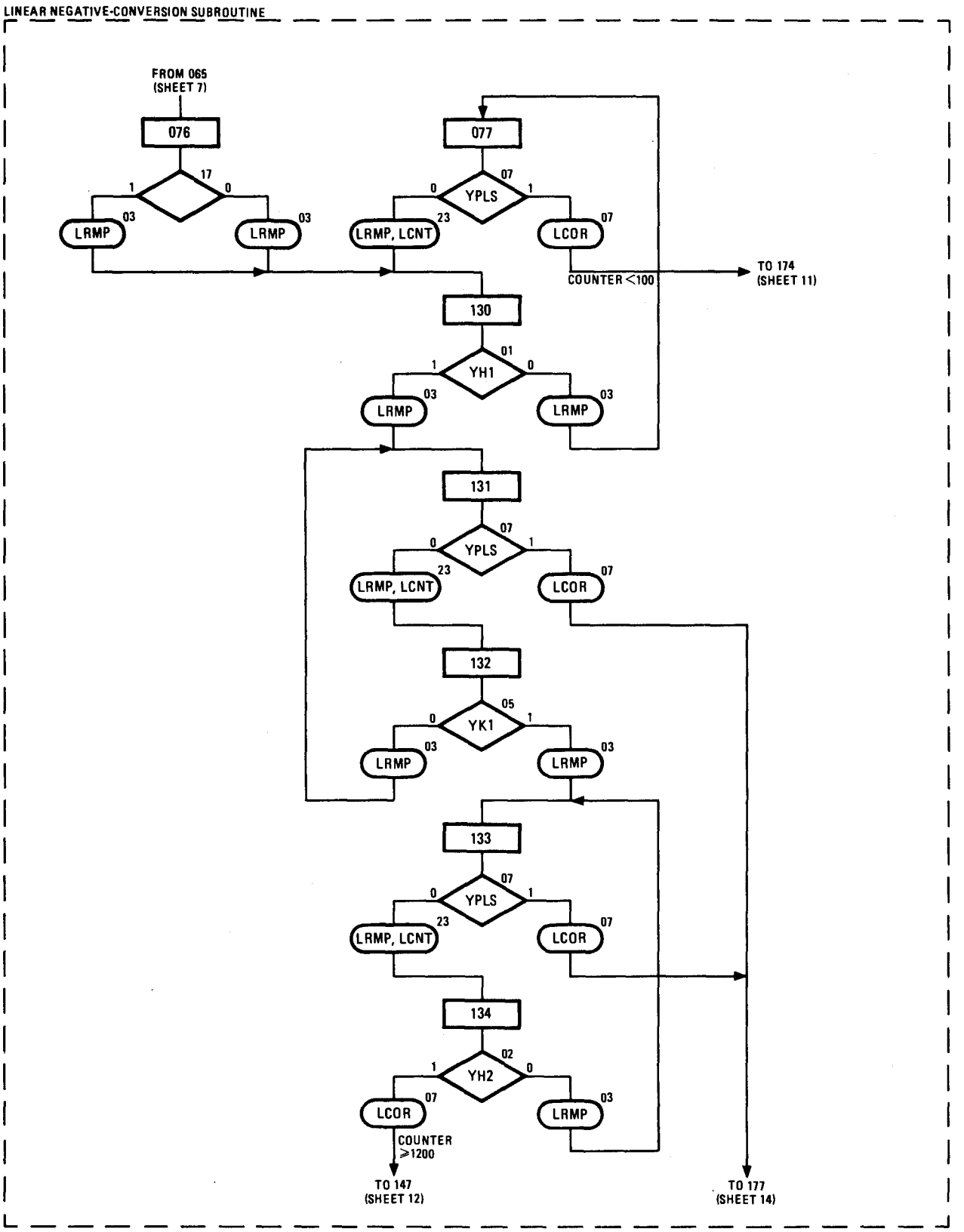

Figure 8-15. Operating Program Flow Chart (9B of 14)

10a

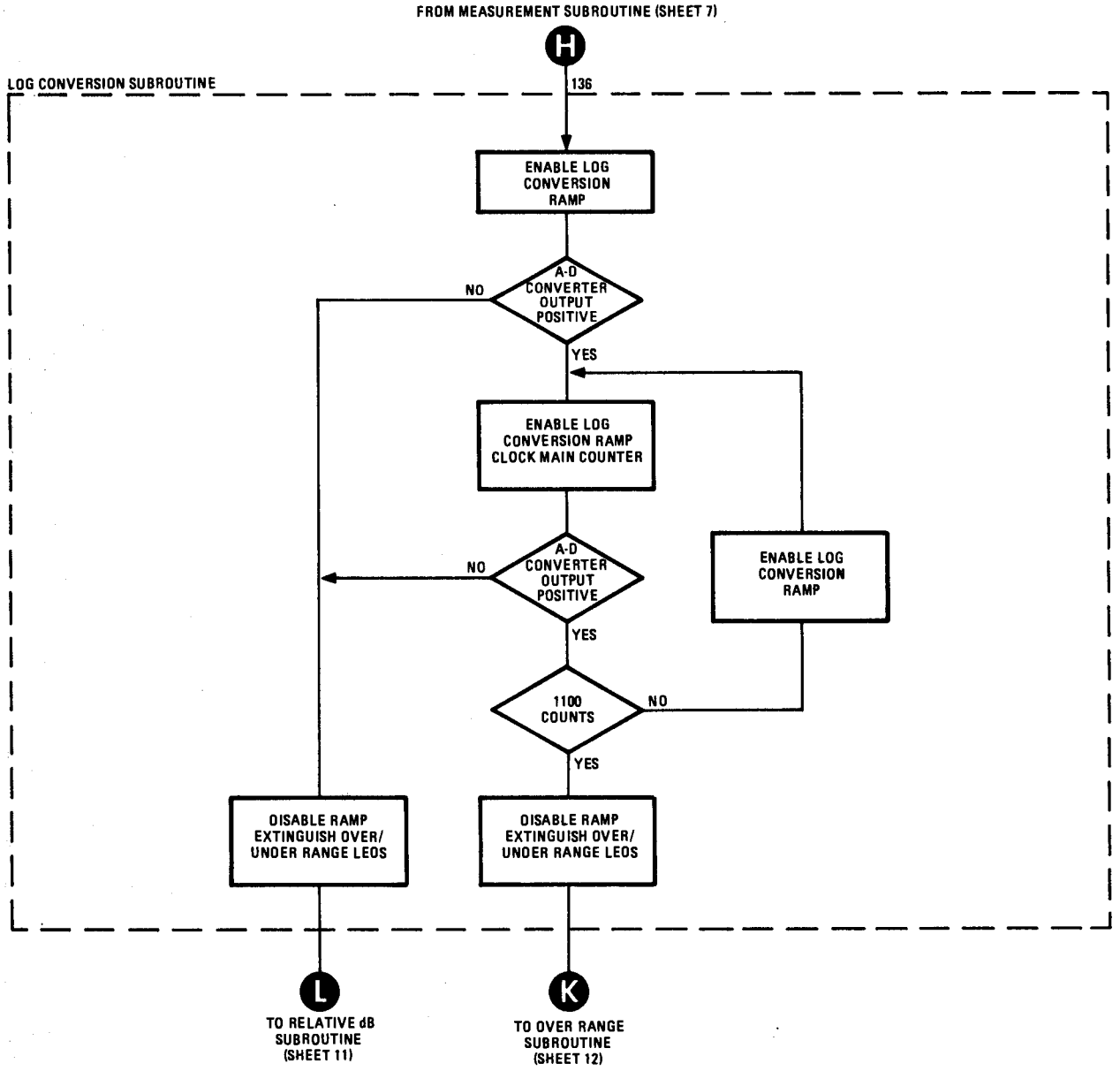

Figure 8-15. Operating Program Flow Chart (10A of 14)

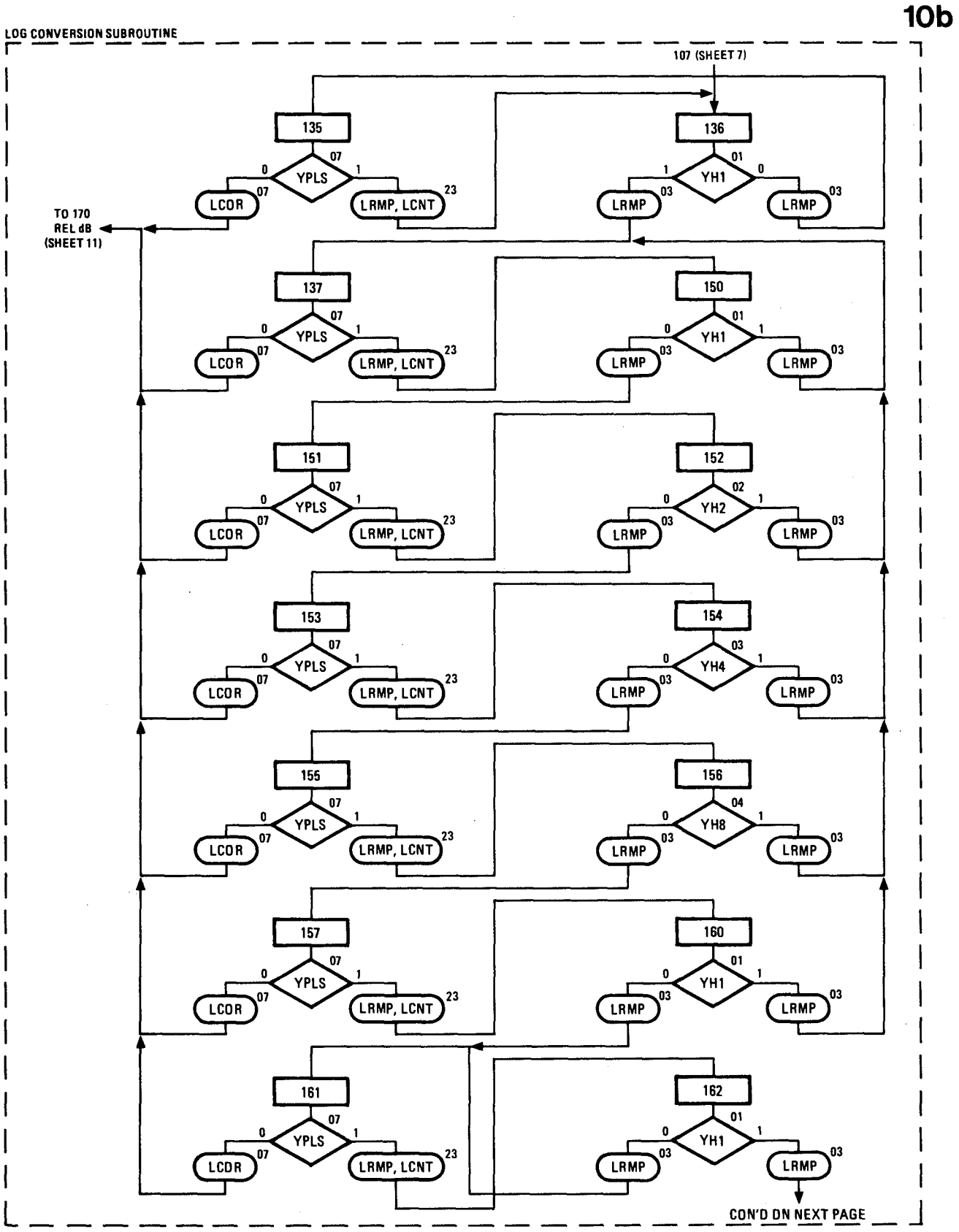

Figure 8-15. Operating Program Flow Chart (10B of 14)

10c

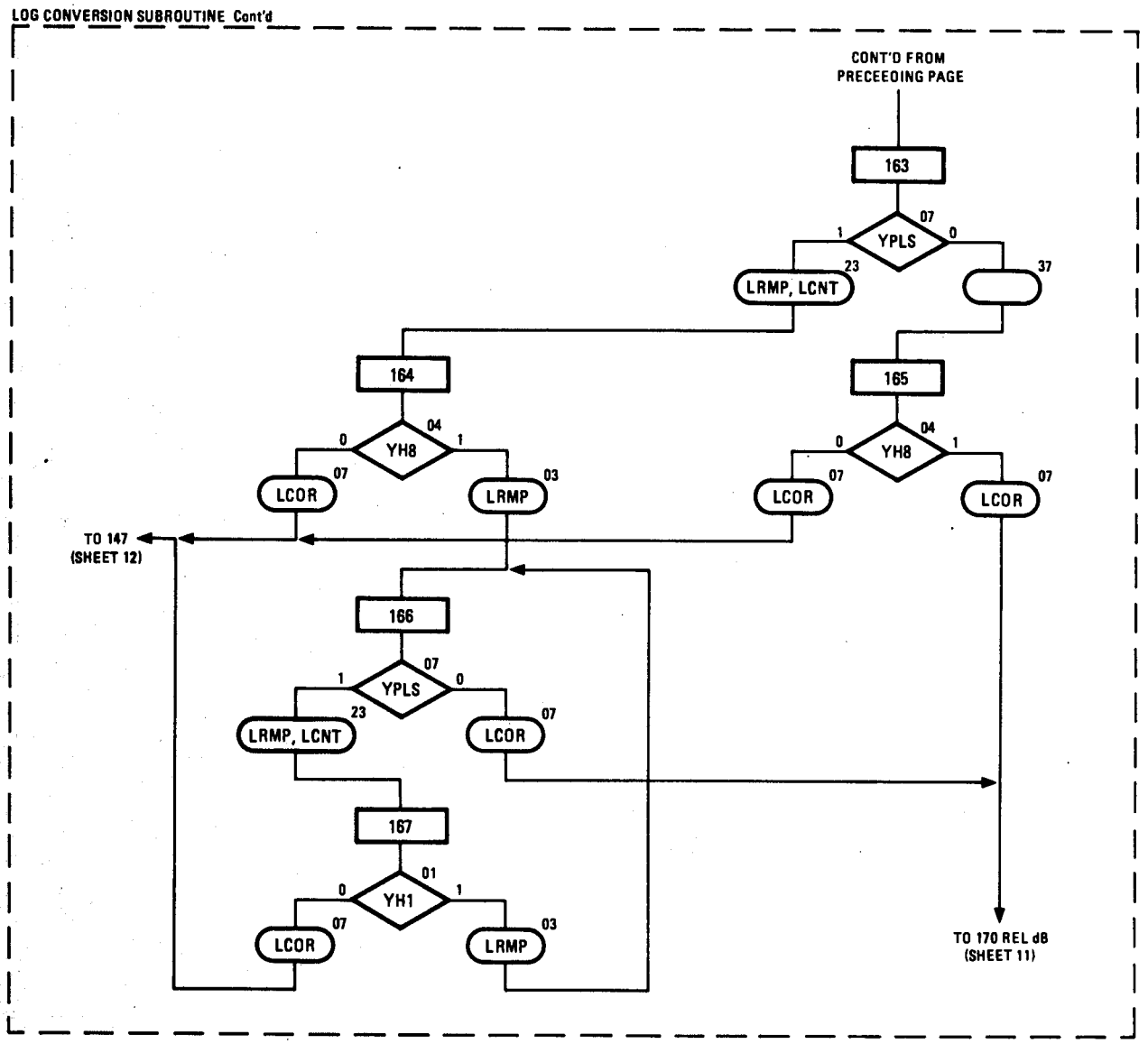

Figure 8-15. Operating Program Flow Chart (10C of 14)

(This page is intentionally left blank)

11a

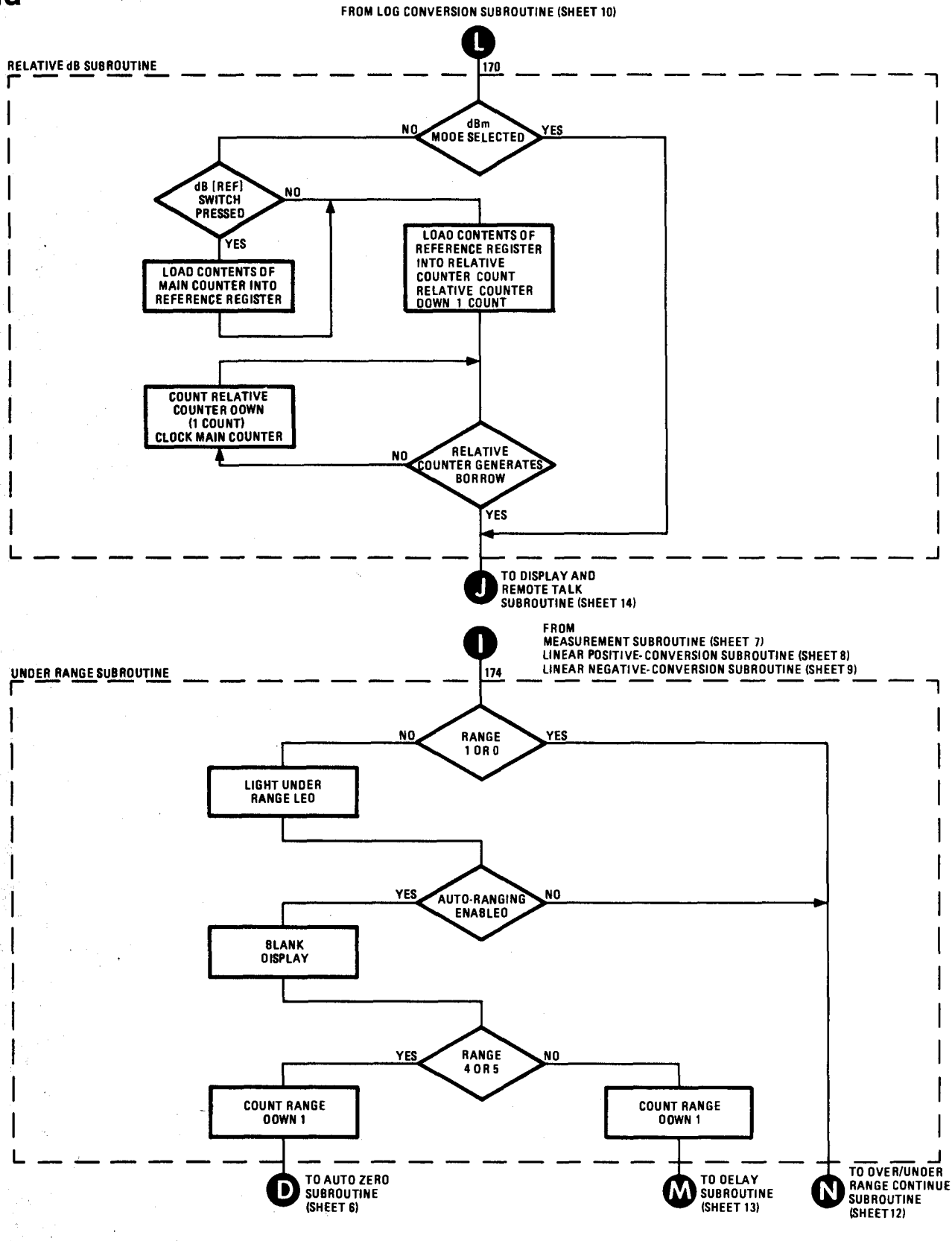

Figure 8-15. Operating Program Flow Chart(11A of 14)

11b

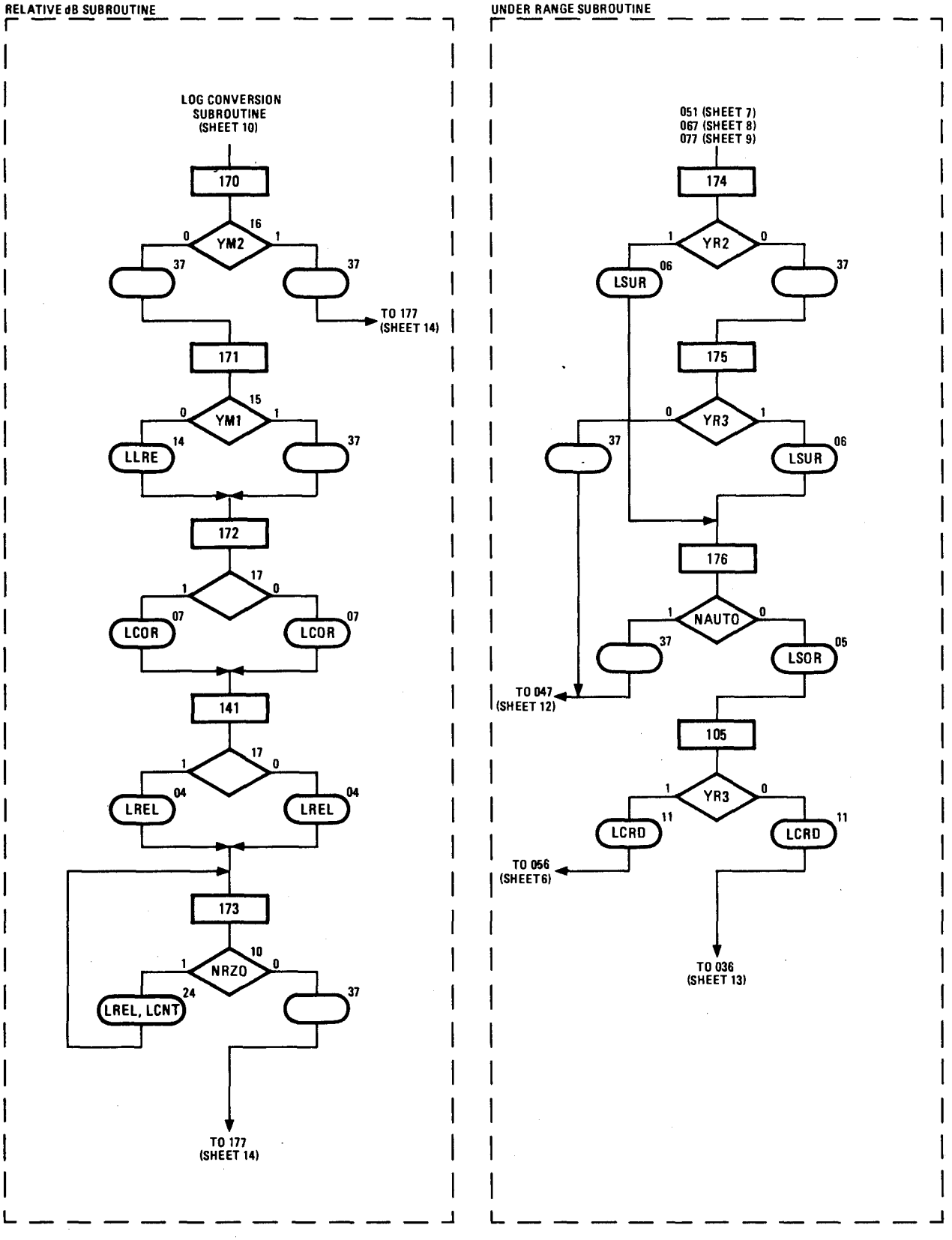

Figure 8-15. Operating Program Flow Chart (11B of 14)

12a

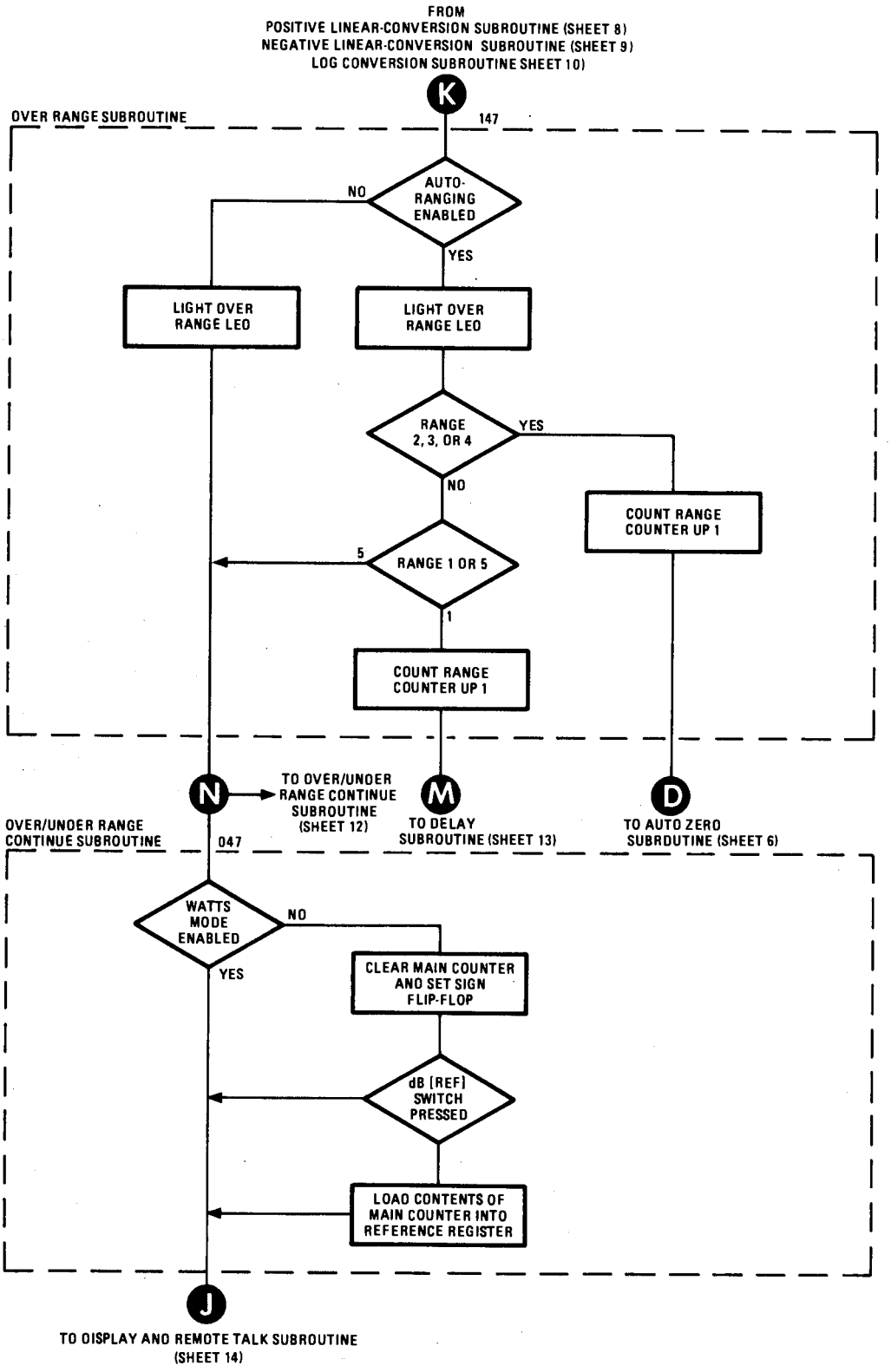

Figure 8-15. Operating Program Flow Chart (12A of 14)

12b

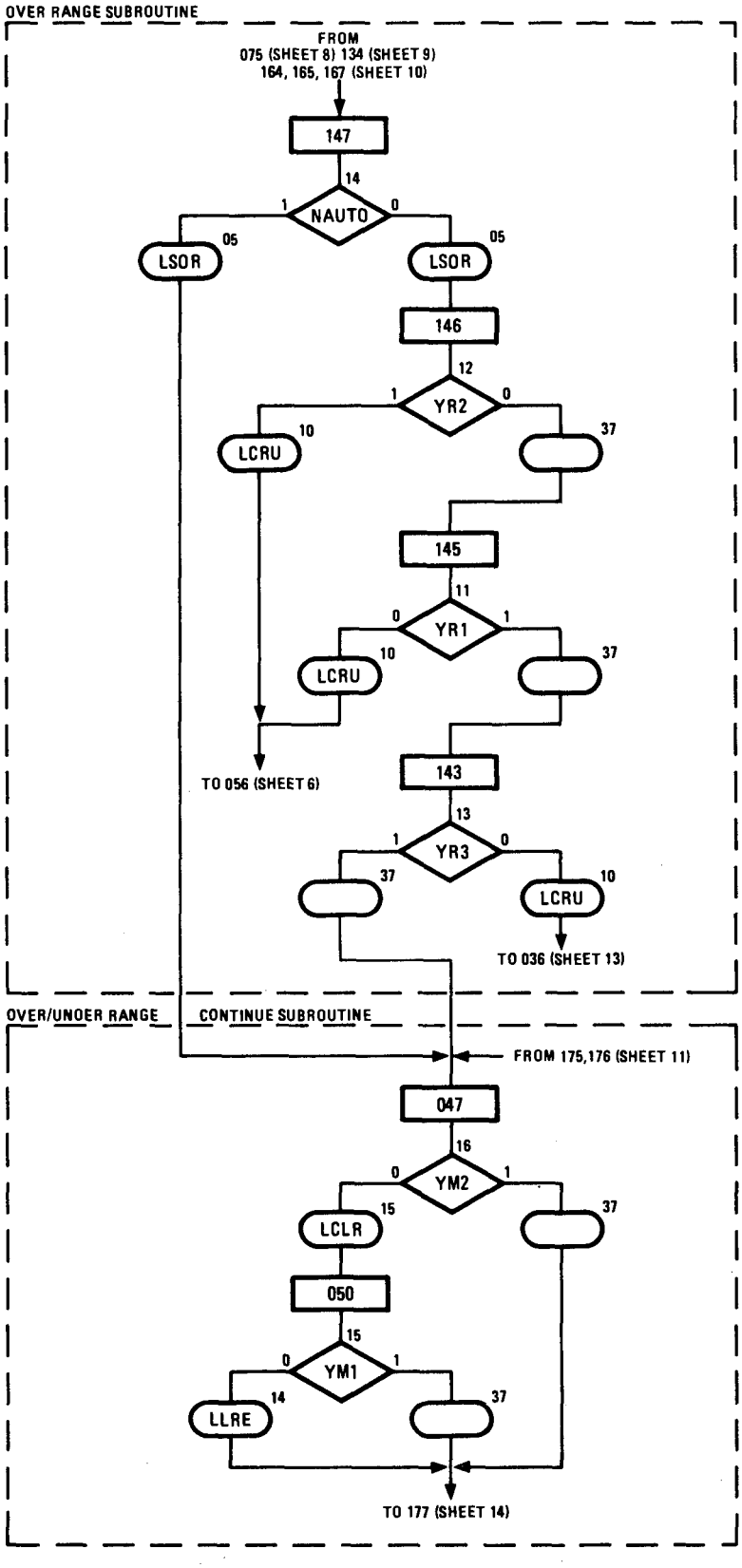

Figure 8-15. Operating Program Flow Chart (12B of 14)

13a

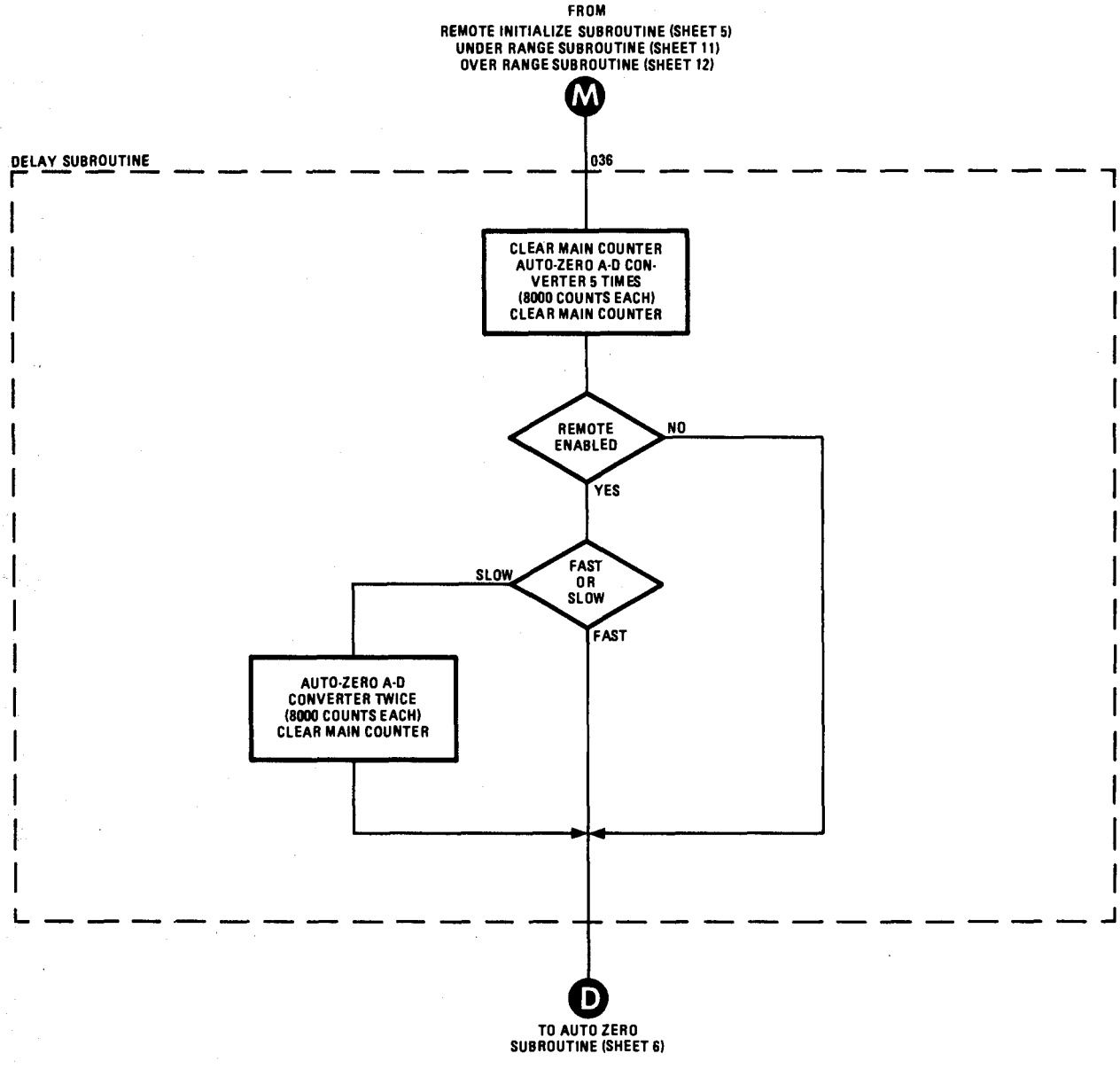

Figure 8-15. Operating Program Flow Chart (13A of 14)

13b

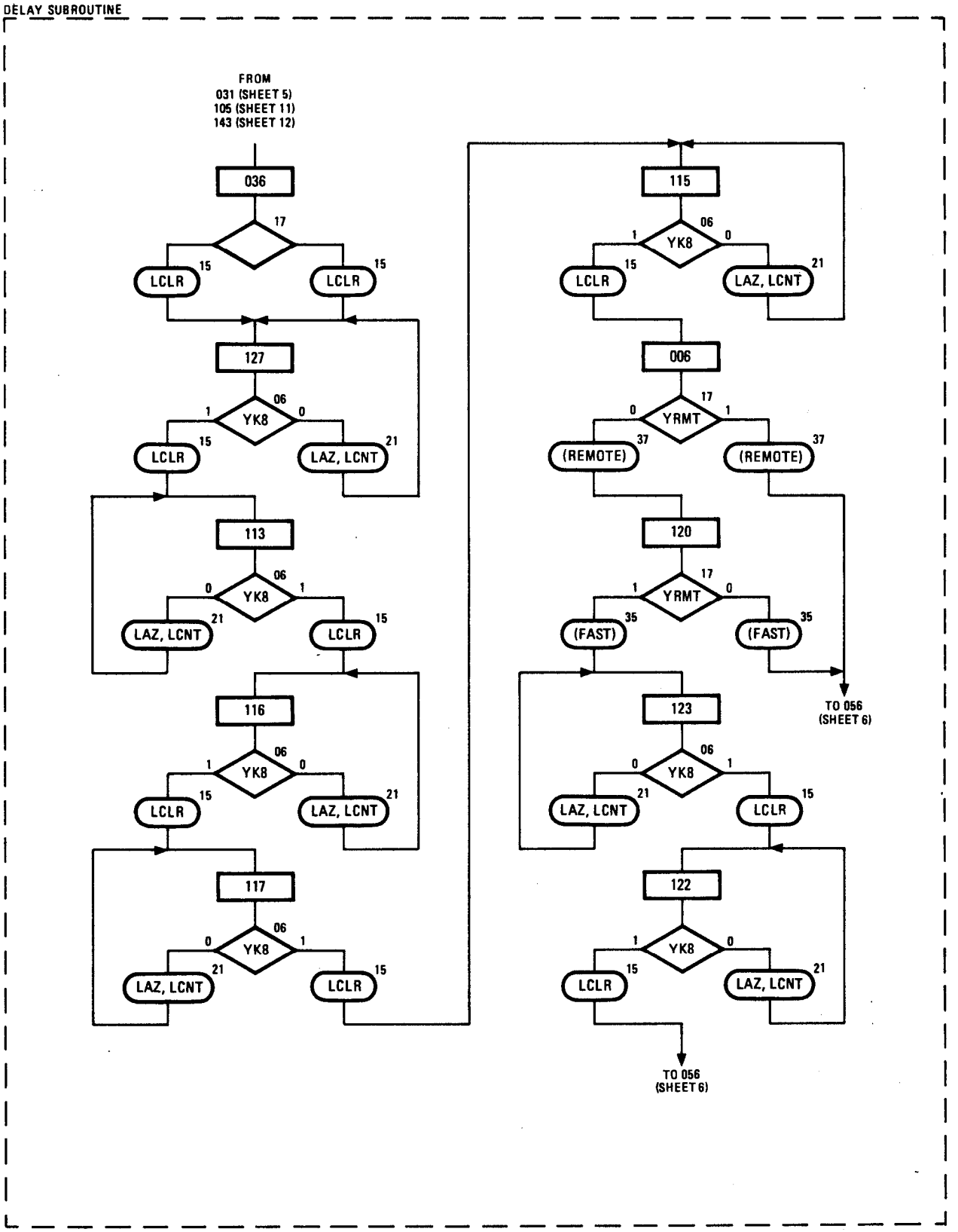

Figure 8-15. Operating Program Flow Chart (13B of 14)

14a

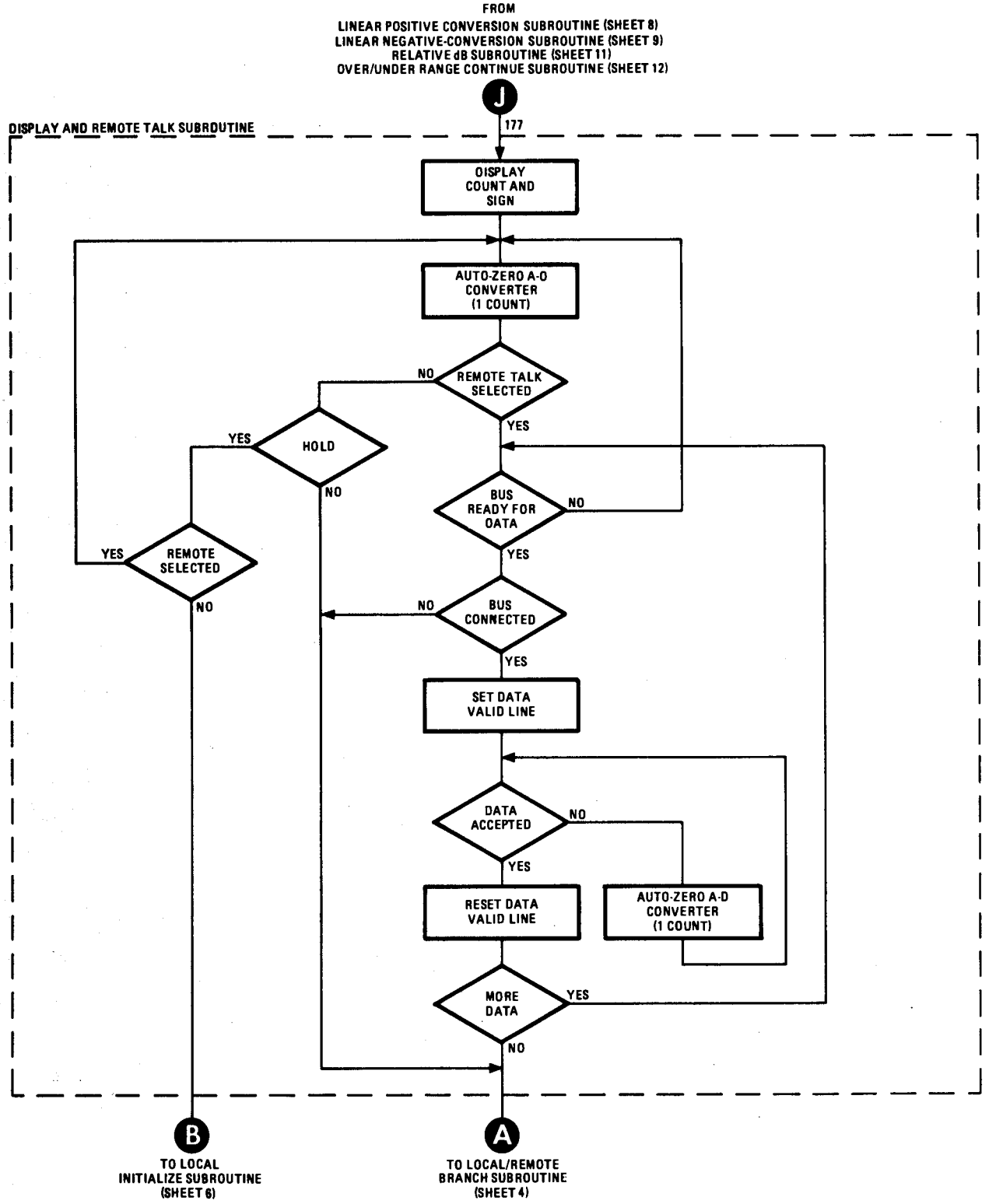

Figure 8-15. Operating Program Flow Chart (14A of 14)

14b

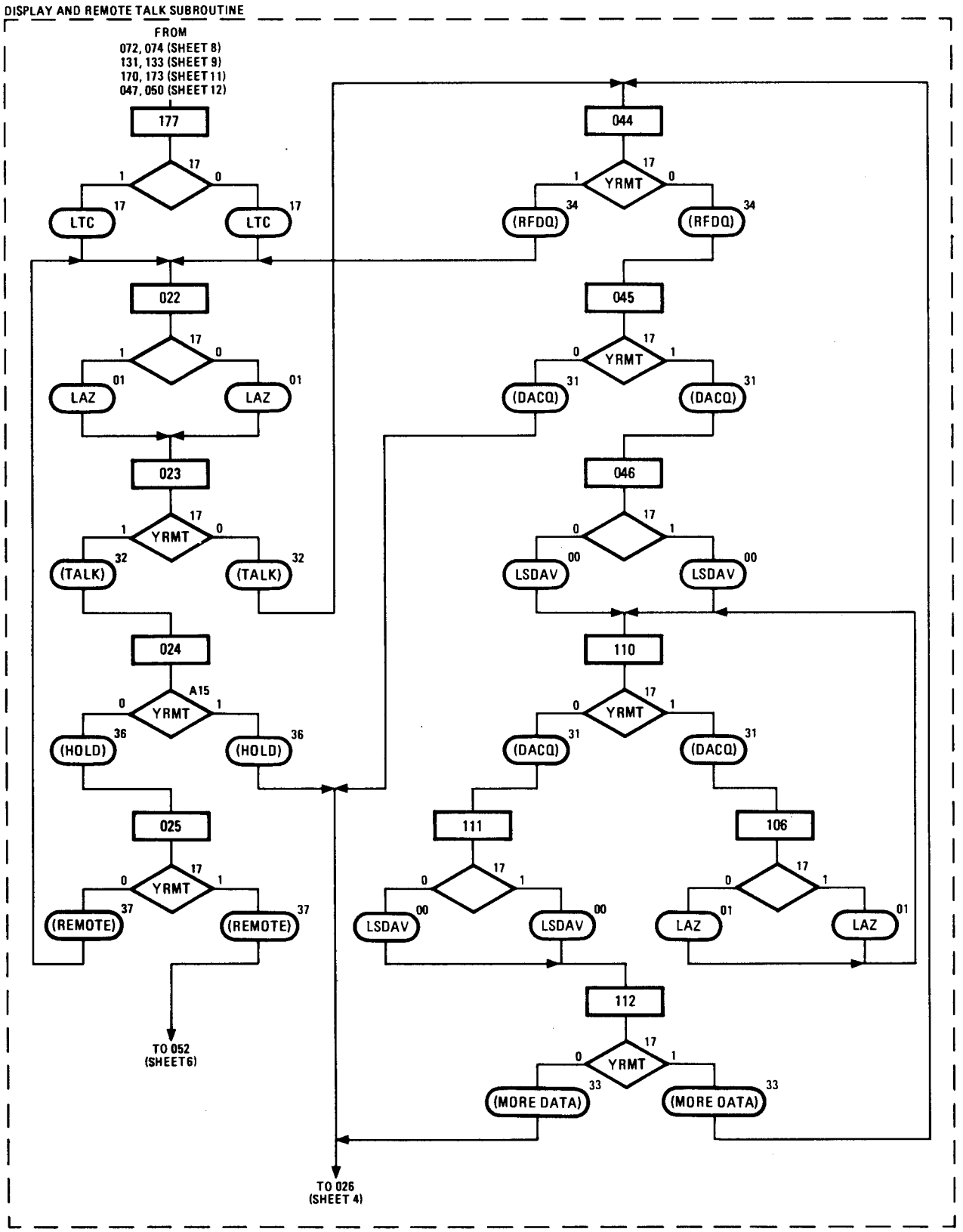

Figure 8-15. Operating Program Flow Chart (14B of 14)

Table 8-3. Standard Instrument Checkout (1 of 17)

Step	Instrument Setup and Test Procedure	Test Description and Key Operating Sequence
1	Connect Range Calibrator to Power Meter and set equipment controls as follows: **Range Calibrator** FUNCTION. . . . . CALIBRATE POLARITY . . . . . NORMAL RANGE. . . . . 30 mW LINE . . . . . .ON **Power Meter** CAL FACTOR %. . . 100 POWER REF . . . . Off (out) MODE . . . . . WATT RANGE HOLD . . . ON (in) LINE . . . . . .ON When power is first applied verify that digital readout is blanked. Then wait two seconds for display to stabilize and verify that: a. Power Supply outputs are: +15.0 ± 0.5 Vdc; less than 0.01 Vac ripple and noise –15.0 ± 0.5 Vdc; less than 0.01 Vac ripple and noise +5.00 ± 0.01 Vdc; less than 0.01 Vac ripple and noise. b. Digital Readout indicates 31.6 ±8.0 mW. c. mW lamp is lit and all other front-panel lamps are not lit.	**NOTE** *If the Power Meter is equipped with either remote interface option (002 or 024), remove both the A6 and A7 Assemblies before performing the standard checkout procedure.* DESCRIPTION – This step verifies that the power supplies are operating properly, that the Power Meter powers up normally, and that the Power Meter is capable of displaying a WATT MODE, range 5 30% input power level. **NOTE** *If Power Supply outputs are not within specifications, the ROMs used in the instrument may provide random outputs, thereby causing the Power Meter to operate erratically.* KEY OPERATING SEQUENCE **Power Up Subroutine** Refer to Table 8-6, Operating Program Descriptions **Local Initialize Subroutine** Branch to Auto Zero Subroutine Auto **Zero Subroutine** Refer to Table 8-6, Operating Program Descriptions **Measurement Subroutine** **NOTE** *A-D Converter input voltage at DC test point (A3TP4 should be stabilized at +0.316 ±0.080 Vdc at address 061.* Load input voltage into A-D Converter (ramp amplitude at RMP test point A3TP2 is 2.24 ± 0.57 Vp-p). Initiate linear positive-conversion and branch to Linear Positive-Conversion Subroutine. **Linear Positive Conversion Subroutine** Detect YPLS = Oat address 072 (633 ± 160 clock pulse, 10.5 ± 2.7 ms after address 071). Clear OVER and UNDER RANGE indications Branch to Display and Remote Talk Subroutine **Display and Remote Talk Subroutine** Display main counter output (316 ± 80) and positive sign (off)

Table 8-3. Standard Instrument Checkout (2 of 17)

Step	Instrument Setup and Test Procedure	Test Description and Key Operating Sequence
2	Turn Power Meter CAL ADJ control slightly clockwise and counterclockwise and verify that indication on Digital Readout increases and decreases.	DESCRIPTION – The previous step verified program execution up to the first address of the Display and Remote Talk Subroutine. This step verifies that the Power Meter CAL ADJ control is operational and that the program branches from the Display and Remote Talk Subroutine to the Local Initialize Subroutine, and then continues to cycle. KEY OPERATING SEQUENCE – Program execution and circuit operation verified in previous step except as indicated below. **Display and Remote Talk Subroutine** Branch to Local Initialize Subroutine. **Measurement Subroutine** **NOTE** *Voltage at DC test point A3TP4 should vary as CAL ADJ control is rotated.* Ramp amplitude at RMP test point A3TP2 changes in proportion to voltage change at DC test point A3TP4 (1 mV change at A3TP4 = 7.1 mV change in p-p ramp amplitude).
3	Set Range Calibrator RANGE switch to 100 mW and adjust CAL ADJ control to obtain 100.1 indication on Digital Readout.	DESCRIPTION – This step verifies that the Power Meter is capable of properly displaying a WATT MODE, Range 5 100% input power level. KEY OPERATING SEQUENCE – Program execution and circuit operation previously verified except as indicated below: **Measurement Subroutine** Voltage at DC test point A3TP4 is adjustable to 1.001 ± 0.003V. Ramp amplitude at RMP test point A3TP2 is 7.1 Vp-p. **Linear Positive Conversion Subroutine** Detect YPLS = 0 at address 074 (2004 clock pulses, 33.4 ms, after address 071). Branch to Display and Remote Talk Subroutine.
4	Turn Power Meter CAL ADJ control to obtain 100.0 mW indication, then set CAL FACTOR % switch, in turn, to each position. Verify that the indications given on the following page are obtained.	DESCRIPTION - This step verifies that the CAL FACTOR % switch is operating properly and that the Power Meter is capable of properly displaying a WATT MODE, Range 5 117% input power level. KEY OPERATING SEQUENCE – Program execution and circuit operation previously verified except as indicated on the following page.

Table 8-3. Standard Instrument Checkout (3 of 17)

Step	Instrument Setup and Test Procedure	Tast Description and Key Operating Sequence
4 (cont)	Position / Indication 99 — 101.0 ± 0.2 mW 98 — 102.0 ± 0.2 mW 97 — 103.1 ± 0.2 mW 9 6 — 104.2 ± 0.2 mW 95 — 105.3 ± 0.2 mW 94 — 106.4 ± 0.2 mW 93 — 107.5 ± 0.2 mW 92 — 108.7 ± 0.2 mW 91 — 109.9 ± 0.2 mW 90 — 111.1 ± O.2 mW 89 — 112.4 ± 0.2 mW 88 — 113.6 ± 0.2 mW 87 — 114.9 ± 0.2 mW 86 — 116.3 ± 0.2 mW 85 — 117.6 ±0.2 mW	CAL FACTOR % Switch Position / A-D Converter Input Voltage (DC test point A3TP4) / A-D Converter Ramp Amplitude (RMP test point A3TP2) 99 — 1.010 ± 0.002 — 7.171 ± 0.014 98 — 1.020 ± 0.002 — 7.242 ± 0.014 97 — 1.031 ± 0.002 — 7.320 ± 0.014 96 — 1.042 ± 0.002 — 7.398 ± 0.014 95 — 1.053 ± 0.002 — 7.467 ± 0.014 94 — 1.064 ± 0.002 — 7.554 ± 0.014 93 — 1.075 ± 0.002 — 7.633 ± 0.014 92 — 1.087 ± 0.002 — 7.718 ± 0.014 91 — 1.099 ± 0.002 — 7.803 ± 0.014 90 — 1.111 ± 0.002 — 7.889 ± 0.014 89 — 1.124 ± 0.002 — 7.980 ± 0.014 88 — 1.136 ± 0.002 — 8.066 ± 0.014 87 — 1.149 ± 0.002 — 8.158 ± 0.014 86 — 1.163 ± 0.002 — 8.257 ± 0.014 85 — 1.176 ± 0.002 — 8.350 ± 0.014
5	Turn Power Meter CAL ADJ control clockwise as required to obtain OVER RANGE indication; i.e., Digital Read-out is blanked and OVER RANGE indicator is lit.	DESCRIPTION – This step verifies that the Power Meter is capable of detecting and indicating an OVER RANGE indication. KEY OPERATING SEQUENCE – Program execution and circuit operation previously verified except as indicated below: **Measurement Subroutine** A-D Converter Input Voltage at DC test point A3TP4 is adjustable to greater than ±1.200V. Ramp amplitude at RMP test point A3TP2 is greater than 8.4 Vp-p. **Linear Positive-Conversion Subroutine** Branch from address 075 to Over Range Subroutine (2403 clock pulses, 33.4 ms, after start address 071). **Over Range Subroutine** Light OVER RANGE indicator and blank Digital Readout (l _ . _) . Branch to Over/Under Range Continue Subroutine. **Over/Under Range Continue Subroutine** Branch to Display and Remote Talk Subroutine.

Table 8-3. Standard Instrument Checkout (4 of 17)

Step	Instrument Setup end Test Procedure	Test Description and Key Operating Sequence
6	Turn Power Meter CAL ADJ control counterclockwise until OVER RANGE lamp goes out and indication appears on Digital Readout.	DESCRIPTION– This step verifies that the Power Meter is capable of detecting the end of an over range condition and resetting the front-panel display accordingly. KEY OPERATING SEQUENCE – Program execution and circuit operation previously verified except as indicated below: **Over Range Subroutine** Branch to Over/Under Range Continue Subroutine when over range condition exists. **Over/Under Range Continue Subroutine** Branch to Display and Remote Talk Subroutine when over range condition exists. **Measurement Subroutine** A-D Converter input voltage at DC test point A3TP4 decreases to less than 1.200V. Ramp amplitude at RMP test point A3TP2 decreases to less than 8.5 Vp-p. **Linear Positive-Conversion Subroutine** Detect YPLS = 0 at address 074; reset OVER RANGE indication and clear blanked display.
7	Set CAL FACTOR % switch to 100 and turn Power Meter CAL ADJ control counterclockwise until Digital Readout indicates 99.0 mW. Then set Range Calibrator RANGE switch to 10 mW and verify that Digital Readout indicates 9.8 ± 0.2 mW and that UNDER RANGE indicator lights.	DESCRIPTION – This step verifies that the Power Meter is capable of detecting and indicating an under-range condition. KEY OPERATING SEQUENCE – Program execution and circuit operation previously verified except as indicated below: **Measurement Subroutine** A-D Converter input voltage at DC test point A3TP4 is 0.098 ± 0.001V. Ramp amplitude at RMP test point A3TP2 is 0.696 ± 0.014 Vp-p. **Linear Positive Conversion Subroutine** YPLS = 0 detected at address 067 (delay = 198 ± 2 clock pulses, 3.3 ms, after start address 071). Branch to Under Range Subroutine. **Under Range Subroutine** Light UNDER RANGE indicator. Branch to Over/Under Range Continue Subroutine.

Table 8-3. Standard Instrument Checkout (5 of 17)

Step	Instrument Setup and Test Procedure	Test Description and Key Operating Sequence
8	Set Power Meter RANGE HOLD switch to off (out) and verify that Power Meter auto-ranges to range 4 according to the following sequence: a. mW lamp remains lit. b. Digital Readout blanks momentarily and decimal point moves one position to left. c. Digital Readout indication changes from blanked to 9.90 ± 0.08 mW and UNDER RANGE lamp goes out.	DESCRIPTION – This step verifies the capability of the Power Meter to auto-range from range 5 to range 4, and to display a range 4 100 % input power level. KEY OPERATING SEQUENCE – Program execution and circuit operation previously verified except as indicated below: **Under Range Subroutine (RANGE HOLD switch set to on)** Branch to Over/Under Range Continue Subroutine (previous step verified that LSUR instruction was generated but did not verify branch). **Under Range Subroutine (RANGE HOLD switch set to off)** Blank Digital Readout. Count range counter down one range. Branch to Auto Zero Subroutine. **Auto Zero Subroutine** A-D Converter input at DC test point A3TP4 stabilizes at 0.980 ± 0.020 Vdc prior to branch to Measurement Subroutine.
9	Set Range Calibrator RANGE switch to 100 mW and verify that Power Meter auto-ranges back to range 5 according to the following sequence: a. mW lamp remains lit. b. Digital Readout blanks momentarily, decimal point moves one position to left, and OVER RANGE indicator lights momentarily. c. Digital Readout indication changes from blanked to 99.0 mW.	DESCRIPTION – This step verifies the capability of the Power Meter to auto-range from range 4 to range 5. KEY OPERATING SEQUENCE – Program execution and circuit operation previously verified except as indicated below: **Measurement Subroutine (range 4)** A-D Converter input voltage at DC test point A3TP4 rises to greater than +1.200V. **Over Range Subroutine** Blank Digital Readout and light OVER RANGE indicator. Count range counter up one range. Branch to Auto Zero Subroutine. **Auto Zero Subroutine** A-D Converter input voltage at DC test point A3TP4 stabilizes at 0.990 ± 0.005V prior to branch to Measurement Subroutine. **NOTE** *As previously verified, OVER RANGE indicator is reset and Digital Readout is unblanked in subsequent Linear Positive-Conversion Subroutine.*

Table 8-3. Standard Instrument Checkout (6 of 17)

Step	Instrument Setup and Test Procedure	Test Description and Key Operating Sequence
10	Set Power Meter RANGE HOLD switch to on (in) and Range Calibrator FUNCTION switch to STANDBY. Adjust DC OFF potentiometer A3R2 as required to obtain 00.0 mW indication with blinking – sign.	DESCRIPTION – This step adjusts DC OFF potentiometer A3R2 as required to remove any dc voltage introduced by the dc amplifier. KEY OPERATING SEQUENCE – Program execution and circuit operation previously verified except as indicated below: **Measurement Subroutine** A-D Converter input voltage at DC test point A3TP4 is adjustable to 0.000. Branch randomly to Linear Positive- and Negative-Conversion Subroutines. **Linear Positive-Conversion Subroutine** (Reference; previously verified). Branch to Under Range Subroutine. **Linear Negative-Conversion Subroutine** Branch to Under Range Subroutine
11	Set Range Calibrator RANGE switch to 100 mW and FUNCTION switch to CALIBRATE. Adjust FREQ potentiometer A3R69 to obtain maximum indication on Digital Readout and verify that frequency at A2TP5 is 220 ± 16 Hz.	DESCRIPTION – This step adjusts the reference frequency of the Power Meter. KEY OPERATING SEQUENCE – Program execution previously verified; refer to Service Sheet 7 for circuit operation.
12	Adjust Power Meter CAL ADJ control to obtain 1.000 Vdc indication at rear-panel RECORDER output and LIN potentiometer A3R37 to obtain 100.0 indication on Digital Readout. Then set Range calibrator RANGE switch to 10 mW and verify that Digital Readout indicates 10.0 mW.	DESCRIPTION – This step adjusts the linear positive-conversion slope of the A-D ramp. KEY OPERATING SEQUENCE – Program execution previously verified; refer to Service Sheet 8 for circuit operation.
13	Set Range Calibrator RANGE switch to 3 mW and release Power Meter RANGE HOLD switch. Verify that Power Meter auto-ranges to range 4 (refer to step 8) and that Digital Readout indicates 3.16 ± 0.4 mW.	DESCRIPTION – The primary purpose of this step is to set up reference conditions for the next step; it is essentially the same as step 8 except that a range 4 30% input power level is applied to cause auto-ranging. KEY OPERATING SEQUENCE – Program execution and circuit operation previously verified except for range 4 rise time of A-D Converter input voltage at DC test point A3TP4. **Auto Zero Subroutine** A-D Converter input voltage at DC test point A3TP4 stabilizes at 0.316 ± 0.002V by end of Auto Zero Subroutine (delay of 8000 clock pulses, 133 ms, after start address 056).

Table 8-3. Standard Instrument Checkout (7 of 17)

Step	Instrument Setup and Test Procedure	Test Description and Key Operating Sequence
14	Set Range Calibrator RANGE switch to 300 µW and verify that Power Meter auto-ranges to range 3 (refer to step 8) and that Digital Readout indicates .316 ± .01 mW.	DESCRIPTION – This step verifies that the Power Meter will auto-range from range 4 to range 3 when the input power level is changed from a range 4 30% level to a range 33070 level. KEY OPERATING SEQUENCE – Program execution and circuit operation previously verified except for range counter range 3 output and range 3 A-D Converter input voltage rise time at A3TP4. **Measurement Subroutine** (1st cycle after new input level) A-D Converter input voltage at DC test point A3TP4 decreases to less than 0.100V (range 4 selected). **Under Range Subroutine** Count range counter down one range to range 3. **Local Initialize Subroutine** Branch to Auto Zero Subroutine. **Auto Zero Subroutine** A-D Converter input voltage at DC test point A3TP4 stabilizes at 0.316 ± 0.002V by end of Auto Zero Subroutine (delay of 8000 clock pulses, 133 ms, after start address 056).
15	Set Range Calibrator RANGE switch to 30 µW and verify that Power Meter auto-ranges to range 2 according to the following sequence: a. Digital Readout blanks (0_. _) momentarily and UNDER RANGE lamp lights momentarily. b. mW lamp goes out, µW lamp lights, and decimal point moves two places to right while Digital Readout is blanked. c. Digital Readout indication changes from blanked to 31.6 ± 1.0 mW.	DESCRIPTION – This step verifies that the Power Meter will auto-range from range 3 to range 2 when the input power level is changed from a range 3 30% level to a range 2 30% level. KEY OPERATING SEQUENCE – Program execution and circuit operation previously verified except as indicated below: **Measurement Subroutine** (1st cycle after new input level) A-D Converter input voltage at DC test point A3TP4 decreases to less than 0.100V (range 3 selected). **Under Range Subroutine** Light UNDER RANGE indicator (address 174). Blank Digital Readout (reference; previously verified). Branch to Delay Subroutine. **Delay Subroutine** Auto Zero A-D Converter (40,000 clock pulses, 666 ins). Branch to Auto Zero Subroutine. **Auto Zero Subroutine** A-D Converter input voltage (A3TP4) stabilizes at 0.316 +0.10V by end of Auto Zero Subroutine (delay of 8000 counts, 133 ms, after start address 056). **NOTE** *As previously verified, UNDER RANGE indication is reset and Digital Readout is unblanked in first subsequent Linear Positive Conversion Subroutine.*

Table 8-3. Standard Instrument Checkout (8 of 17)

Step	Instrument Setup and Test Procedure	Test Description and Key Operating Sequence
16	Set Power Meter RANGE HOLD switch to on (in) and Range Calibrator FUNCTION switch to STANDBY. Press Power Meter SENSOR ZERO switch and verify that µW lamp remains lit and that ZERO lamp lights and remains lit for approximately four seconds. Adjust ZERO OFF potentiometer A3R47 as required to obtain 00.0 indication with blinking — sign when ZERO lamp is lit, and verify that indication remains at 00.0 ± 00.2 when ZERO lamp goes out.	DESCRIPTION – This step is a course adjustment of the ZERO OFF potentiometer; it provides a proper reference for the spike balance adjustment performed in the next step. KEY OPERATING SEQUENCE – Program execution and circuit operation previously verified except as indicated below: a. Power Meter remains configured in WATT MODE (refer to Service Sheet 3, Mode Selection). b. Voltage at DC test point A3TP4 is adjustable to ±0.010V.
17	Set Range Calibrator FUNCTION switch to CALIBRATE and RANGE switch to 100 µW. Observe indication on Digital Readout and adjust Power Meter CAL ADJ control to obtain 100.0 µW indication. Then press and hold SENSOR ZERO switch and adjust BAL potentiometer A3R65 as required to obtain 60.0 ± 0.2 µW indication while ZERO lamp is lit.	DESCRIPTION – This step adjusts BAL potentiometer A3R65 to center the sensor zero circuit output voltage range (Service Sheet 8). KEY OPERATING SEQUENCE – Program execution and circuit operation previously verified except as indicated below: a. Voltage at DC test point A3TP4 is adjustable to 1.000 ± 0.002V when SENSOR ZERO switch is not pressed. b. Voltage at DC test point A3TP4 is adjustable to 0.600 ± 0.002V with BAL potentiometer A3R65 when SENSOR ZERO switch is pressed.
18	Set Range Calibrator FUNCTION switch to STANDBY, then press and release Power Meter SENSOR ZERO switch. Verify that Digital Readout indication changes back to 00.0 with blinking — sign while ZERO lamp is lit and remains at 00.0 ± 00.2 when ZERO lamp goes out.	DESCRIPTION – This step rezeros the Power Sensor to establish the proper reference conditions for the next step.
19	Set Range Calibrator RANGE switch to 3 µW and FUNCTION switch to CALIBRATE. Verify that an UNDER RANGE indication is observed, then release Power Meter RANGE HOLD switch and verify that Power Meter auto-ranges to range 1 according to the following sequence: a. µW lamp remains lit. b. Digital Readout blanks momentarily and UNDER RANGE lamp lights momentarily; decimal point moves one position to left while Digital Readout is blanked. c. Digital Readout indication changes from blanked to 3.16 ± 1.0 mW.	DESCRIPTION – This step verifies the capability of the Power Meter to auto-range from range 2 to range 1 and to properly display a range 1 30% input power level. KEY OPERATING SEQUENCE – Program execution and circuit operation previously verified except as indicated below: a. A-D Converter input voltage at DC test point A3TP4 is 0.032 ± 0.01V when RANGE HOLD switch is set to on (in). b. Range counter is counted down to range 1 during Under Range Subroutine when RANGE HOLD switch is set to off. c. Program branches from Local Initialize Subroutine (address 054) to Auto Zero Subroutine. d. A-D Converter input voltage at DC test point A3TP4 rises to 0.316 ± 0.01V within ten seconds after range counter is counted down to range 1.

Table 8-3. Standard Instrument Checkout (9 of 17)

STEP	Instrument Setup and Test Procedure	Test Description and Key Operating Sequence
20	Set Range Calibrator FUNCTION switch to STANDBY, press Power Meter SENSOR ZERO switch, and adjust ZERO OFF potentiometer A3R47 as required to obtain 0.00 ± 0.02 indication with blinking – sign while ZERO lamp is lit. Verify that UNDER RANGE lamp does not light and that Digital Readout indication remains at 00.0 ± 0.02 when ZERO lamp goes out. **NOTE** *Power Meter is now calibrated for WATT MODE operation and zeroed on the most sensitive range.*	DESCRIPTION – This step provides fine adjustment of the ZERO OFF potentiometer. KEY OPERATING SEQUENCE – Program execution and circuit operation previously verified except as indicated below: a. When A-D Converter input voltage at DC test point A3TP4 decreases to less than 0.100V after FUNCTION switch is set to STANDBY, operating program branches from Under Range Subroutine (address 175) to Over/Under Range Continue Subroutine. b. A-D Converter input voltage at DC test point A3TP4 is adjustable to ±0.002V.
21	Set Range Calibrator RANGE switch to 30 µW and FUNCTION switch to CALIBRATE. Verify that Power Meter autoranges to range 2 (µW lamp is lit and decimal point is positioned immediately to left of least significant digit) and Digital Readout indicates 31.6 ± 0.2 µW.	DESCRIPTION – This step verifies that the Power Meter will auto-range from range 1 to range 2 when a range 2 28% input power level is applied. KEY OPERATING SEQUENCE – Program execution and circuit operation previously verified except as indicated below: a. A-D Converter input voltage at DC test point A3TP4 rises to greater than 1.200V in less than 10 seconds. b. Range counter is counted up to range 2 during Over Range Subroutine and program branches to Delay Subroutine (address 143). c. A-D Converter input voltage at DC test point A3TP4 is stabilized at 0.316V by end of first Auto Zero Subroutine following Over Range Subroutine.
22	Set Range Calibrator RANGE switch to 300 µW and verify that Power Meter autoranges to range 3 (µW lamp goes out and mW lamp lights; decimal point moves two positions to left) and that Digital Readout indicates, 0.316 ± 0.002 mW.	DESCRIPTION – This step verifies that the Power Meter will auto-range from range 2 to range 3 when a range 3 28% input power level is applied. KEY OPERATING SEQUENCE – Program execution and circuit operation previously verified except as indicated below: a. A-D Converter input voltage at DC test point A3TP4 rises to greater than 1.200V within one second after input level is changed. b. Range counter is counted up to range 3 during Over Range Subroutine and program branches to Auto Zero Subroutine (address 146). c. A-D Converter input voltage at DC test point A3TP4 is stabilized at 0.316V by end of Auto Zero Subroutine.

Table 8-3. Standard Instrument Checkout (10 of 17)

Step	Instrument Setup and Test Procedure	Test Description and Key Operating Sequence
23	Set Range Calibrator RANGE switch to 3 mW and verify that Power Meter auto-ranges to range 4 (decimal point moves one place to right, mW lamp remains lit).	DESCRIPTION – This step verifies that the Power Meter will auto-range from range 3 to range 4 when a range 4 28% input signal level is applied. KEY OPERATING SEQUENCE – Program execution and circuit operation previously verified except as indicated below: a. A-D Converter input voltage at DC test point A3TP4 rises to greater than 1.200V within 0.10 second after level is changed. b. Range counter is counted up to range 4 during Over Range Subroutine (program branching and instructions previously verified). c. A-D Converter input voltage at DC test point A3TP4 is stabilized at 0.316V by end of Auto Zero Subroutine.
24	Set Power Meter RANGE HOLD switch to on (in) and Range Calibrator FUNCTION switch to STANDBY. Then set dBm MODE switch to on (in) and verify that indication changes as follows: a. UNDER RANGE lamp remains lit. b. mW lamp goes out and dBm lamp lights. c. Digital Readout blanks (0_. _).	DESCRIPTION- This step verifies that the Power Meter can be configured for dBm MODE measurements. KEY OPERATING SEQUENCE – Program execution and circuit operation previously verified except as indicated below: **Local Initialize Subroutine** Mode Register loaded **Measurement Subroutine** A-D Converter input voltage at DC test point A3TP4 is 0.000 ± 0.002V. Main counter is preset to 0000. Sign is preset positive. UNDER RANGE indicator is lighted. Digital Readout is blanked. Branch to Under Range Subroutine.

Table 8-3. Standard Instrument Checkout (11 of 17)

<table>
<tr><th>Step</th><th>Instrument Setup and Test Procedure</th><th>Test Description and Key Operating Sequence</th></tr>
<tr><td>25</td><td>Set Range Calibrator RANGE switch to O dBm and FUNCTION switch to CALIBRATE. Adjust Power Meter LZR potentiometer (A3R59) as required to obtain 0.00 dBm indication on Digital Readout.
NOTE
This step sets the A-D Converter log threshold. When the specified indication is obtained, the Digital Readout should be just on the verge of blanking, i.e., the Digital Readout may randomly alternate between 0.00 dBm and UNDER RANGE blanked (0_. _).</td><td>DESCRIPTION – This step sets the A-D Converter Log Conversion threshold.

KEY OPERATING SEQUENCE – Program execution and circuit operation previously verified except as indicated below:

Measurement Subroutine
A-D Converter input voltage at DC test point A3TP4 is 0.100 ± 0.002 Vdc.
Ramp amplitude at RMP test point A3TP2 is 0.71 ± 0.144 Vp-p.
LZR potentiometer can be adjusted so that YPLS qualifier alternates between 0 and 1 at address 066.
When YPLS=0, branch to Under Range Subroutine (reference; previously verified).
When YPLS=l, branch to Log Conversion Subroutine.

Log Conversion Subroutine
Detect YPLS =0 at address 135.
Branch to Relative dB Subroutine.

Relative dB Subroutine
Branch to Display and Remote Talk Subroutine.</td></tr>
<tr><td>26</td><td>Set Power Meter CAL FACTOR % switch to 85 and verify that Digital Readout indicates 0.70 ± 0.02 dBm. Then adjust CAL ADJ control as required to obtain the following indications:

a. 1.01 dBm.

b. 2.02 dBm.

After verifying indications, set CAL FACTOR % switch to 100 and readjust CAL ADJ control to obtain 0.00 dBm indication.</td><td>DESCRIPTION – This step verifies the exponential slope of the log conversion ramp and the branching between various addresses in the Log Conversion Subroutine.

KEY OPERATING SEQUENCE – Program execution and circuit operation previously verified except as indicated below:

<table><tr><th>A-D Converter Input Voltage (DC Test Point A3TP4)</th><th>Ramp Amplitude (RMP Test Point A3TP2)</th><th>Addresses Verified, Log Conversion Subroutine</th></tr><tr><td>0.117 ± 0.002 (0.70 ± 0.02 dBm)</td><td>0.831 ± 0.014</td><td>135,136</td></tr><tr><td>0.126 ± 0.002 (1.01 dBm)</td><td>0.895 ± 0.014</td><td>137, 150</td></tr><tr><td>0.159 ± 0.002 (2.02 dBm)</td><td>1.129 ± 0.014</td><td>151, 152</td></tr></table>detect YPLS=0 and branch to dB Rel Subroutine

NOTE
If necessary, adjust LFS potentiometer A3R48 to obtain specified ramp amplitude.</td></tr>
</table>

Table 8-3. Standard Instrument Checkout (12 of 17)

<table>
<tr><th>Step</th><th>Instrument Setup and Test Procedure</th><th>Test Description and Key Operating Sequence</th></tr>
<tr><td>27</td><td>Set Power Meter CAL FACTOR % switch to 100 and Range Calibrator RANGE switch to 5 dBm. Adjust CAL ADJ control to obtain 5.06 dBm indication, then readjust CAL ADJ control to obtain 5.00 dBm indication.</td><td>DESCRIPTION – This step verifies the slope of the Log Conversion Ramp for a 46% input power level and the branching between various addresses in the Log Conversion Subroutine.

KEY OPERATING SEQUENCE – Program execution and circuit operation previously verified except as indicated below:

A-D Converter input Voltage (DC Test Point A3TP4) | Ramp Amplitude (RMP Test Point A3TP2) | Addresses Verified, Log Conversion Subroutine

0.320 ± 0.003 | 2.272 ± 0.014Vp-p | 153, 154, (detect YPLS = 0 and branch to dB Rel Subroutine)

NOTE
If necessary, adjust LFS potentiometer A3R48 to obtain specified ramp amplitude.</td></tr>
<tr><td>28</td><td>Set Range Calibrator RANGE switch to 10 dBm and adjust CAL ADJ control to obtain the following indications:
a. 10.02 dBm
b. 10.03 dBm
c. 10.05 dBm
d. OVER RANGE blanked Digital Readout (1_. _).</td><td>DESCRIPTION– This step verifies the slope of the Log Conversion Ramp for a 91% input power level and the branching between various addresses in the Log Conversion Subroutine.

KEY OPERATING SEQUENCE – Program execution and circuit operation previously verified except as indicated below:

A-D Converter Input Voltage (DC Test Point A3TP4) | Ramp Amplitude (RMP Test Point A3TP2) | Addresses Verified, Log Conversion Subroutine

1.005 ± 0.002 (10.02 dBm) | 7.136 ± 0.014 Vp-p | 155,156 } detect
1.007 ± 0.002 (10.03 dBm) | 7.150 ± 0.014 Vp-p | 157,160 } YPLS=0 and branch
1.012 ± 0.002 (10.05 dBm) | 7.185 ± 0.014 Vp-p | 161,162 } to dB Rel Subroutine
>1.260V (OVER RANGE) | >8.946 Vp-p | 162, 163, 164, L65

NOTE
If necessary, adjust LFS potentiometer A3R48 to obtain specified ramp amplitude.</td></tr>
</table>

Table 8-3. Standard Instrument Checkout (13 of 17)

Step	Instrument Setup and Test Procedure	Test Description and Key Operating Sequence
29	Readjust CAL ADJ control to obtain 10.00 dBm indication on Digital Readout. Then set WATT MODE switch to on and adjust CAL ADJ control es required to obtain 10.00 mW indication. After obtaining this indication, set dBm MODE switch to on and adjust LFS potentiometer A3R48 to obtain 10.00 dBm indication. **NOTE** *Power Meter is now fully calibrated for both linear and log measurements.*	DESCRIPTION – This step adjusts the slope of the Log Conversion Ramp. KEY OPERATING SEQUENCE – Program execution and circuit operation previously verified except for A-D Converter; refer to Service Sheet 8.
30	Set Range Calibrator RANGE switch to –15 dBm. Verify that UNDER RANGE indication is observed, set RANGE HOLD switch to off (out), and verify that Digital Readout indicates –15.00 ± 0.50 dBm. Then set Range Calibrator FUNCTION switch to STANDBY, press Power Meter SENSOR ZERO switch, return Range Calibrator FUNCTION switch to CALIBRATE when ZERO lamp goes out, and verify that Digital Readout indication is –15.00 ±0.02 dBm.	DESCRIPTION – This step verifies that the main counter is preset properly and that it can be counted down normally for the negative dBm ranges. KEY OPERATING SEQUENCE – Program execution and circuit operation previously verified except for main counter preset and down counting; refer to Service Sheet 9.
31	Set Range Calibrator RANGE switch to –10.00 dBm and adjust Power Meter CAL ADJ control to obtain the following indications: a. 9.99 dBm b. 9.97 dBm c. OVER RANGE blanked (–0 _._) After verifying indications, readjust CAL ADJ control to obtain –10.00 dBm indication.	DESCRIPTION – This step verifies branching between various addresses in the Log Conversion Subroutine. KEY OPERATING SEQUENCE – Program execution and circuit operation previously verified except for branching between Log Conversion Subroutine addresses listed below: a. 9.99 dBm indication verifies the following address branches: 163, 165, dB Rel Subroutine. b. 9.97 dBm indication verifies the following address branches: 164, 166, 167, branch to dB Rel Subroutine from address 166 c. OVER RANGE indication verifies the branch from address 167 to the Over Range subroutine.

Table 8-3. Standard Instrument Checkout (14 of 17)

Step	Instrument Setup and Test Procedure	Test Description and Key Operating Sequence
32	Set Range Calibrator RANGE switch to –5 dBm, then press Power Meter dB [REF] MODE switch and hold for two seconds. Verify that dBm lamp goes out, dB (REL) lamp lights, and indication on Digital Readout changes to -0.00.	DESCRIPTION – This step verifies the capability of the Power Meter to store a dB reference level and to indicate input power levels with respect to the stored reference. KEY OPERATING SEQUENCE – Program execution and circuit operation previously verified except as indicated below: a. Program execution and circuit operation when dB [REF] switch is pressed. **Local Initialize Subroutine** Mode select inputs loaded into mode register; output of mode register indicates Power Meter configured for dB [REF] MODE. **Measurement Subroutine** Branch to Log Conversion Subroutine. **Log Conversion Subroutine** Branch to dB Relative Subroutine (reference; previously verified. **dB Relative Subroutine** Load sign and contents of main counter into reference register. Load contents of reference register into relative register. Count main and relative counters down until contents of relative counter = 0. Branch to Display and Remote Talk Subroutine. **NOTE** *Program execution and circuit operation when dB [REF] switch released is same as above except contents of main counter are not loaded into reference register.*
33	Set Power Meter RANGE HOLD switch to off (out) and Range Calibrator RANGE switch, in turn, to —10 and +5 dBm. Verify that Digital Readout indication changes to –5.00 ± 0.02 and 10.00 ± 0.02 dBm, respectively. Then set Range Calibrator RANGE switch to –5 dBm and adjust CAL ADJ control as required to obtain 1.00 dBm indication on Digital Readout. After verifying 1.00 dBm indication, readjust CAL ADJ control for 0.00 indication.	DESCRIPTION – This step verifies the up/down counting of the main counter when a negative dB reference value is stored. KEY OPERATING SEQUENCE – Program execution and circuit operation previously verified except as indicated below: **NOTE** dB *Relative Subroutine address 171 (YM1=1) not verified in previous step.* a. When RANGE switch is set to —10 dBm, main counter is counted down to obtain specified indication on Digital Readout. b. When RANGE switch is set to +5 dBm, main counter is counted up to obtain specified indication. c. When RANGE switch is set to –5 dBm and CAL ADJ control is adjusted for 1.00 dBm indication, main counter is first counted down to 0000 then up to 0100 to obtain indication (sign changes when main counter goes through 0).

Table 8-3. Standard Instrument Checkout (15 of 17)

Step	Instrument Setup end Test Procedure	Test Description and Key Operating Sequence
34	Set Range Calibrator RANGE switch to 5 dBm, Press dB [REF] MODE switch, and observe indication on Digital Readout change to 0.00 dBm. Then set Range Calibrator RANGE switch, in turn, to 10 and –5 dBm and verify that Digital Readout indication changes to +5.00 ± 0.02 and —10.00 ± 0.02 dBm, respectively.	DESCRIPTION – This step verifies the up/down counting of the main counter when a positive dBm reference value is stored. KEY OPERATING SEQUENCE – Program execution and circuit operation previously verified except as indicated below: a. When RANGE switch is set to 10 dBm, main counter is counted down to obtain specified indication. b. When RANGE switch is set to –5 dBm, main counter is counted up to obtain specified indication.
35	Set Range Calibrator RANGE switch to 5 dBm and adjust CAL ADJ control to obtain —1.00 dBm indication on Digital Readout.	DESCRIPTION – This step verifies the down/up counting of the main counter when a positive dBm reference value is stored and a slightly less positive input power level is applied. KEY OPERATING SEQUENCE – Program execution and circuit operation previously verified except for down/up counting of main counter (sign changes when main counter goes through 0 000); refer to Service Sheet 9.
36	Set Range Calibrator RANGE switch to 20 dBm, press dB [REF] switch and observe that Digital Readout indication changes 0.00. Then turn CAL ADJ control clockwise to obtain OVER RANGE blanked indication and counterclockwise to clear OVER RANGE indication. Verify that when OVER RANGE indication is cleared, new indication on Digital Readout is with respect to stored reference of 20.00 dBm.	DESCRIPTION – This step verifies that dB Relative Subroutine address branching is proper for a dB (REL) MODE OVER RANGE condition. KEY OPERATING SEQUENCE – Program execution and circuit operation previously verified except for addresses 047 (YM2=0) and 050 (YM1=1) of Over/Under Range Continue Subroutine.
37	Repeat step 35 except press dB [REF] switch when OVER RANGE indication is present. Verify that when OVER RANGE indication is cleared, new indication is greater than 20.00 dBm.	DESCRIPTION – This step verifies that the reference register is cleared when the dB [REF] switch is pressed while an OVER RANGE condition exists. KEY OPERATING SEQUENCE – Program execution and circuit operation previously verified except for address 050 (YM1=0) of Over/Under Range Continue Subroutine.

Table 8-3. Standard Instrument Checkout (16 of 17)

Step	Instrument Setup and Test Procedure	Test Description and Key Operating Sequence
38	Set Range Calibrator RANGE switch to 5 dBm and adjust Power Meter CAL ADJ control to obtain 5.00 indication on Digital Readout. Then set Power Meter MODE WATT switch to on and Range Calibrator POLARITY switch to REVERSE. Verify that Power Meter Digital Readout indicates —3.16 ± 6.3 mW.	DESCRIPTION – Negative Watt readout capability is provided to enable detection of high noise conditions. This step verifies that capability of the Power Meter to detect and indicate a 28% negative power level. (A negative WATT MODE measurement simulates a high noise condition at the input of the Power Sensor.) KEY OPERATING SEQUENCE – Program execution and circuit operation previously verified except as indicated below: **Measurement Subroutine** A-D Converter input voltage at DC test point A3TP4 = –0.316 ± 0.002V Preset counter and branch to Linear Negative-Conversion Subroutine (reference; previously verified). **Linear Negative-Conversion Subroutine** Initiate Linear Negative-Conversion Ramp and count main counter up. Detect YPLS=0 at address 131 (633 ± 126 clock pulses from address 077) and branch to Display and Remote Talk Subroutine.
39	Set Power Meter RANGE HOLD switch to on (in) and Range Calibrator RANGE switch to 10 mW. Verify that Digital Readout indicates 10 ± 2 mW, and record indication.	DESCRIPTION – This step verifies the capability of the Power Meter to indicate a 91% (of max) negative power level. KEY OPERATING SEQUENCE – Program execution and circuit operation previously verified except as indicated below: **Measurement Subroutine** A-D Converter input voltage at DC test point A3TP4 = 1.000 ± 0.002V. **Linear Negative-Conversion Subroutine** Detect YPLS=0 and branch to Display and Remote Talk Subroutine at address: a. 131 for minimum specified level (reference; verified in previous step). b. 133 for 10.00 mW or greater indication (delay = 2201 ± 200 clock pulses from address 077).

Table 8-3. Standard Instrument Checkout (17 of 17)

Step	Instrument Setup and Test Porcedure	Test Description and Key Operating Sequence
40	Set Range Calibrator RANGE switch to 30 mW and verify that OVER RANGE indication is observed.	DESCRIPTION – This step verifies that the Power Meter will detect and display a negative power level OVER RANGE condition. KEY OPERATING SEQUENCE – Program execution and circuit operation previously verified except as indicated below: a. A-D Converter input voltage at DC test point A3TP4 is greater than –1.200V. b. Program branches from address 134 of Linear Negative-Conversion Subroutine to Display and Remote Talk Subroutine.
41	Set Range Calibrator RANGE switch back to 10 mW and verify that Digital Readout indication returns to level observed in step 39.	DESCRIPTION – This step verifies the capability of the Power Meter to reset a negative power level OVER RANGE condition when an in-range negative power level is applied. KEY OPERATING SEQUENCE – Program execution and circuit operation previously verified except for LCOR instruction associated with address 131 or 133 (refer to step 39).
42	Rotate Power Meter CAL ADJ control as required to change Digital Readout indication from under 10.00 to over 10.00 or vice versa.	DESCRIPTION – This step verifies the last remaining address branch of the Linear-Negative Conversion Subroutine. KEY OPERATING SEQUENCE – Refer to step 39.
43	Set Range Calibrator POLARITY switch to NORMAL and readjust Power Meter CAL ADJ control to obtain 10.00 mW indication. Then verify Power Meter operation per Performance Tests of Section IV. If any indication is abnormal, adjust Power Meter as specified in Section V. If indication is still abnormal after performing adjustment procedure, refer to Table 8-6 for list of unverified instructions, and to analog circuit troubleshooting information provided on Service Sheets 7 and 8.	

8-64. HP-IB Instrument Checkout

8-65. Test programs for verifying the operation of an HP-IB equipped Power Meter are provided in Figures 8-16 and 8-17. The test program provided in Figure 8-16 is written for use on an HP 9830A Calculator, and the program in Figure 8-17 is written for use on an HP 9820A Calculator. The two programs are functionally identical; their only differences are in the specific programming statements required for each calculator.

8-66. The test programs are designed to check out both the operation of the HP-IB circuitry, and that portion of the Power Meter operating program associated with remote operation. After the program is loaded into the calculator memory, it is executed by pressing the RUN and EXECUTE keys in sequence. If the Power Meter functions properly, the program will pause three times. Each pause will be indicated by a printout directing that the CAL ADJ control be adjusted to obtain a specific front-panel indication. (The first pause also directs that the Power Sensor be connected to the POWER REF OUTPUT.) When the proper indications are obtained for the first two pauses, the program will automatically continue. For the third pause, the operator must press the CONT and EXECUTE keys to restart the program after the CAL ADJ and CAL FACTOR % controls are adjusted to obtain the specified indication. The test program will then cycle to the end and print out TESTS COMPLETE to indicate that the Power Meter is functioning properly.

8-67. If the Power Meter does not function properly for any of the tests contained in the program, the program will halt and print out an error number. Table 8-4 describes the specific problem associated with each error number, the test background, and rationale for the error, and a logical procedure for isolating the error. (Specific programming statements and references contained in Table 8-4 are applicable to the HP 9830A Diagnostic Program only; if an Hp 9820A Calculator is used for the checkout of the Power Meter, it will be necessary to convert the programming statements and references to the 9820A equivalents.) The fault isolation procedure, in turn, is written in general terms and assumes an understanding of HP-IB circuit operation and Power Meter operating program execution. For information covering the Power Meter operating program, refer to Figure 8-16, Table 8-3, and Table 8-4. For information covering HP-IB circuit operation, refer to Service Sheet 4.

NOTE

A read byte subroutine is provided at the end of the diagnostic program to facilitate fault isolation. When this subroutine is used, the calculator display is two words behind the HP-IB ROM output (see Service Sheet 4); i.e., when the ROM is outputting word 2, word 1 is in the calculator's I/O register and word 0 is displayed.

```
10 REM 4-01-75 436A HP-IB CHECKS COMBINED RRG
20 REM PROGRAM WILL RUN AFTER ERROR WITH CONT EXECUTE
30 REMOTE LOCAL CHECKS
40 T=E=Z=1
50 FORMAT 3B
60 FORMAT B
70 FORMAT 2B,"Y"
80 FORMAT 3B,F9.0
90 GOSUB 2410
100 CMD "?U"
105 OUTPUT (13,60)1024
107 GOSUB 2340
110 CMD "?M5"
120 WAIT 5000
130 IF (STAT13#0) THEN 150
140 GOTO 160
150 GOSUB 2310
160 CMD "?U"
170 OUTPUT (13,60)768;
180 GOSUB 2340
190 CMD "?U-","RC"
200 CMD "?U"
210 OUTPUT (13,60)1024;
220 GOSUB 2340
230 T=T+1
240 E=2
250 GOSUB 2370
260 IF M=67 THEN 280
270 GOTO 290
280 GOSUB 2310
290 IF T=2 THEN 230
300 E=3
310 CMD "?U"
320 OUTPUT (13,60)768;
330 GOSUB 2340
340 CMD "?U-","T"
350 T=T+1
360 GOSUB 2370
370 IF T=4 THEN 340
380 IF M#67 THEN 400
390 GOTO 410
400 GOSUB 2310
410 E=T=4
415 REMOTE ZERO CHECKS
420 CMD "?U-","Z2T"
430 GOSUB 2370
440 IF S#85 THEN 460
450 GOTO 470
460 GOSUB 2310
470 IF E=4.5 THEN 510
480 E=4.5
490 GOTO 420
```

Figure 8-16. HP-IB Verification Program (HP 9830A Calculator) (1 of 25)

```
510 CMD "?U-","Z1T"
520 T=T+1
530 E=5
540 GOSUB 2370
550 IF T=16 THEN 2310
560 IF ABS(D*10↑8)>1.5 THEN 510
570 CMD "?U-","AT"
580 GOSUB 2370
590 E=T=6
600 IF S#84 THEN 620
610 GOTO 630
620 GOSUB 2310
630 WAIT 10000
640 CMD "?U-","AT"
650 E=7
660 GOSUB 2370
680 IF S#80 THEN 2310
690 Z=Z+1
700 E=8
710 IF Z=5 THEN 730
720 GOTO 740
730 GOSUB 2310
740 CMD "?U-","T"
750 GOSUB 2370
760 IF ABSD<4*10↑(-8) THEN 780
770 GOTO 410
780 REM 436A MODE CHECKS
790 M=64
800 M=M+1
810 FOR I=1 TO 6
820 DATA 49,73,-30,50,74,-20,51,75,-10,52,76,0,53,77,10,57,73,-30
830 READ R,R1,D1
840 CMD "?U-"
850 OUTPUT (13,70)R,M
860 GOSUB 2340
870 E=E+1
880 CMD "?M5"
890 ENTER (13,80)S,R2,M1,D
900 IF R1#R2 THEN 980
910 IF M1#M THEN 980
920 IF M#68 THEN 940
930 IF D#D1 THEN 990
940 NEXT I
950 RESTORE
960 IF M=68 THEN 1040
970 GOTO 800
980 IF M#68 THEN 1000
990 PRINT "DATA IS";D"SHOULD BE";D1
1000 PRINT "MODE PRGM";M,"RECEIVED";M1"RANGE PRGM";R,
1005 PRINT "IS";R2"STATUS";S
1010 GOSUB 2310
1020 PRINT "****"
1030 GOTO 940
```

Figure 8-16. HP-1B Verification Program (HP 9830A Calculator) (2 of 25)

```
1040 REM DEVICE CLEAR CHECKS
1050 CMD "?U-","5DR"
1060 GOSUB 2410
1070 CMD "?U-","T"
1080 GOSUB 2370
1090 E=33
1100 IF S#80 THEN 1140
1110 IF R#73 THEN 1140
1120 IF M#65 THEN 1140
1130 GOTO 1150
1140 GOSUB 2310
1150 E=34
1160 RESTORE 1190
1170 CMD "?U-","DI
1180 FOR I=1 TO 7
1190 DATA 4,16,21,22,29,52,84
1200 READ V
1210 OUTPUT (13,50)256,V,512;
1220 GOSUB 2340
1230 NEXT I
1240 CMD "?U-","I"
1250 CMD "?M5"
1260 ENTER (13,80)S,R,M,D
1270 IF M#68 THEN 1290
1280 GOTO 1300
1290 GOSUB 2310
1300 GOSUB 2410
1310 E=35
1320 WAIT 200
1330 CMD "?U-","D3I"
1340 GOSUB 2370
1350 IF S#82 THEN 1390
1360 IF R#75 THEN 1390
1370 IF M#68 THEN 1390
1380 GOTO 1400
1390 GOSUB 2310
1400 REM ADDRESS CHECKS
1410 E=36
1420 CMD "?U-","AI"
1430 GOSUB 2370
1440 CMD "?U% ),=/","DI"
1450 CMD "?U-","I"
1460 GOSUB 2370
1470 IF M#65 THEN 1490
1480 GOTO 1500
1490 GOSUB 2310
1500 REM CHECKS FAST/SLOW
1510 GOSUB 2410
1520 E=37
1530 CMD "?U-","A2I"
1540 GOSUB 2370
1550 CMD "?U-","T"
```

Figure 8-16. HP-IB Verification Program (HP 9830A Calculator) (3 of 25)

```
1560 CMD "?M5"
1570 WAIT 200
1580 IF (STA(13#2) THEN 1600
1590 GOTO 1610
1600 GOSUB 2310
1610 ENTER (13,S0)S,R,M,D
1620 E=38
1630 CMD "?U-","I"
1640 CMD "?M5"
1650 WAIT 200
1660 IF (STAT13#3) THEN 1600
1670 GOTO 1700
1680 GOSUB 2310
1700 REM 436A POWER ON CHECKS WITH 8481 MOUNT 2-10-75
1710 T=1
1720 CMD "?U-","3R+"
1730 PRINT "CONNECT MOUNT TO POWER REF, POWER REF ON"
1740 PRINT "SET CAL ADJ FOR .799MW"
1750 PRINT
1760 E=39
1770 T=T+1
1780 IF T=301 THEN 2310
1790 GOSUB 2370
1800 DISP "DATA=";D*10↑6
1810 IF D#0.000799 THEN 1770
1820 PRINT ".799 MW RECEIVED"
1830 PRINT "SET CAL ADJ FOR .866 MW"
1840 PRINT
1850 T=1
1860 E=40
1870 T=T+1
1880 IF T=301 THEN 2310
1890 GOSUB 2370
1900 DISP "DATA=";D*10↑6
1910 IF D#0.000866 THEN 1870
1920 PRINT ".866MW RECEIVED"
1930 PRINT
1940 CMD "?"
1950 PRINT "ADJ 436A DISPLAY FOR 1.000 MW +-.001"
1960 PRINT "THEN SET CAL FACTOR TO 85%"
1970 PRINT "CONT EXECUTE"
1980 PRINT
1990 STOP
2000 CMD "?U-","-"
2010 GOSUB 2410
2020 E=41
2030 CMD "?U-","T"
2040 GOSUB 2370
2050 IF 0.000997<D<0.001003 THEN 2070
2060 GOTO 2080
2070 GOSUB 2310
2080 RESTORE 2090
```

Figure 8-16. HP-IB Verification Program (HP 9830A Calculator) (4 of 25)

```
2090 DATA 81,53,65,83,53,63,82,50,65
2100 READ S1,R,M
2110 E=E+1
2120 CMD "?U-"
2130 OUTPUT (13,70)R,M
2140 GOSUB 2340
2150 GOSUB 2370
2160 IF S#S1 THEN 2180
2170 GOTO 2190
2180 GOSUB 2310
2190 IF E#44 THEN 2100
2200 CMD "?U-","A3-T"
2210 E=45
2220 GOSUB 2370
2230 IF 0.001168<D<0.001184 THEN 3250
2240 GOTO 2260
2250 GOSUB 2310
2260 CMD "?U"
2270 OUTPUT (13,60)1024;
2280 OUTPUT (13,60)768;
2290 PRINT "TESTS COMPLETE"
2300 STOP
2310 PRINT "ERROR #";E,
2320 STOP
2330 RETURN
2340 REM ADDS PRINT FOR TRACE
2350 DISP "RUNNING"
2360 RETURN
2370 REM ENTER DATA
2380 CMD "?M5"
2390 ENTER (13,60)S,R,M,D
2400 RETURN
2410 REM DEV CLR
2420 CMD "?U"
2430 OUTPUT (13,50)256,20,512;
2440 GOSUB 2340
2450 RETURN
2460 END
5000 CMD "?U-","R"
5010 CMD "?M5"
5020 A=RBYTE13
5030 PRINT A
5040 GOTO 5020
5050 END
```

Figure 8-16. HP-IB Verification Program (HP 9830A Calculator) (5 of 25)

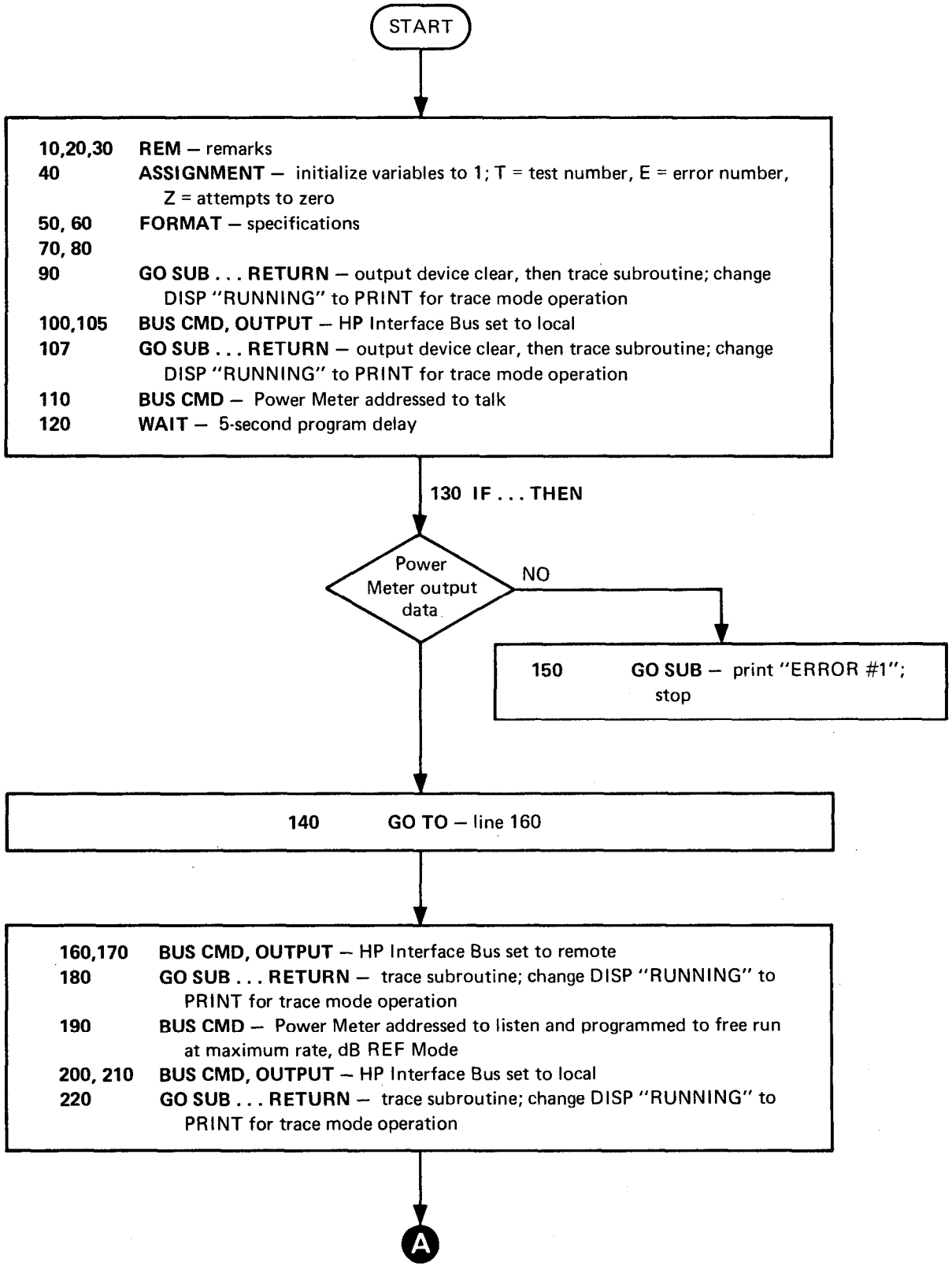

Figure 8-16. HP-IB Verification Program (HP 9830A Calculator) (6 of 25)

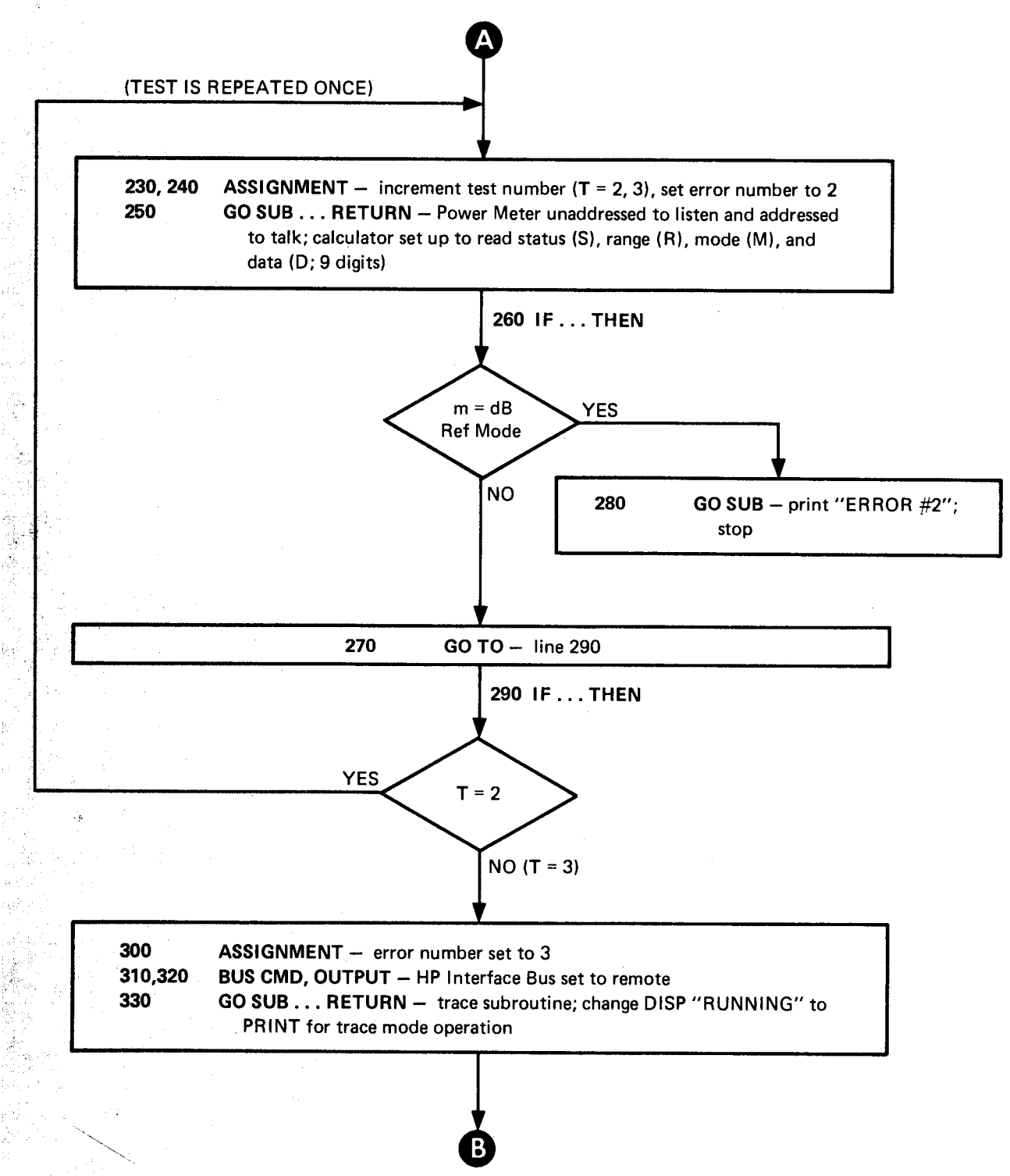

Figure 8-16. HP-IB Verification Program (HP 9830A Calculator) (7 of 25)

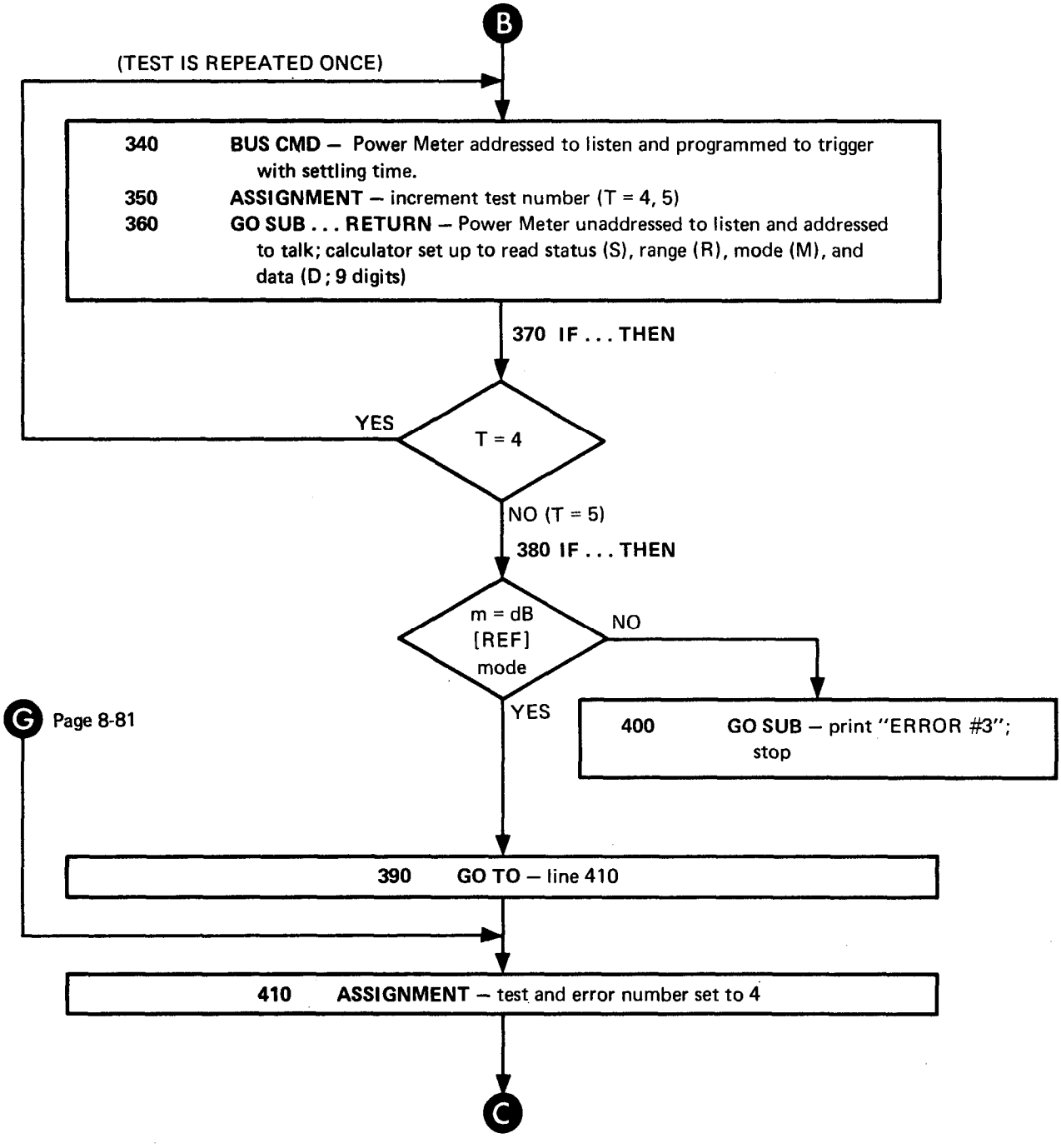

Figure 8-16. HP-IB Verification Program (HP 9830A Calculator) (8 of 25)

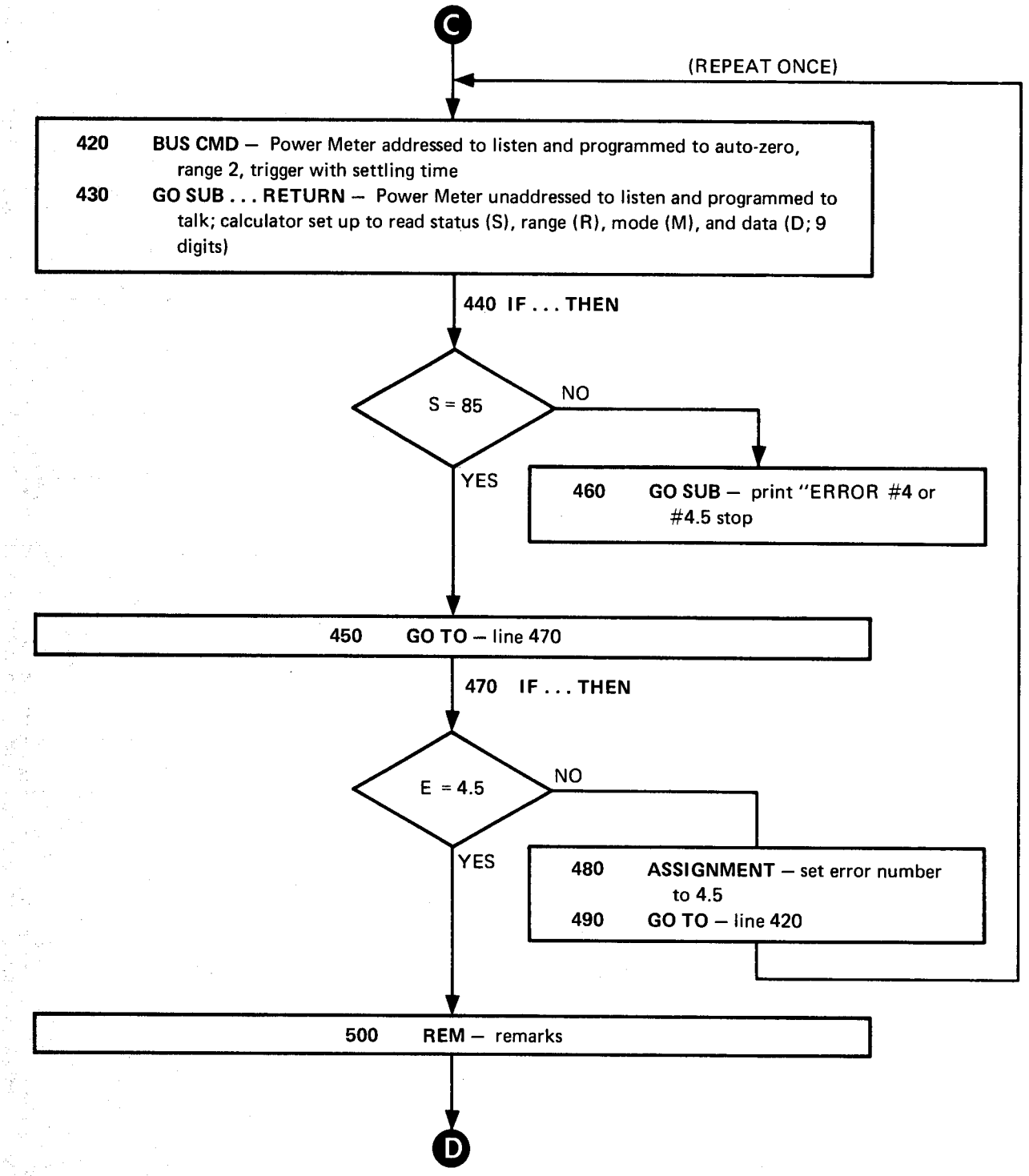

Figure 8-16. HP-IB Verification Program (HP 9830A Calculator) (9 of 25)

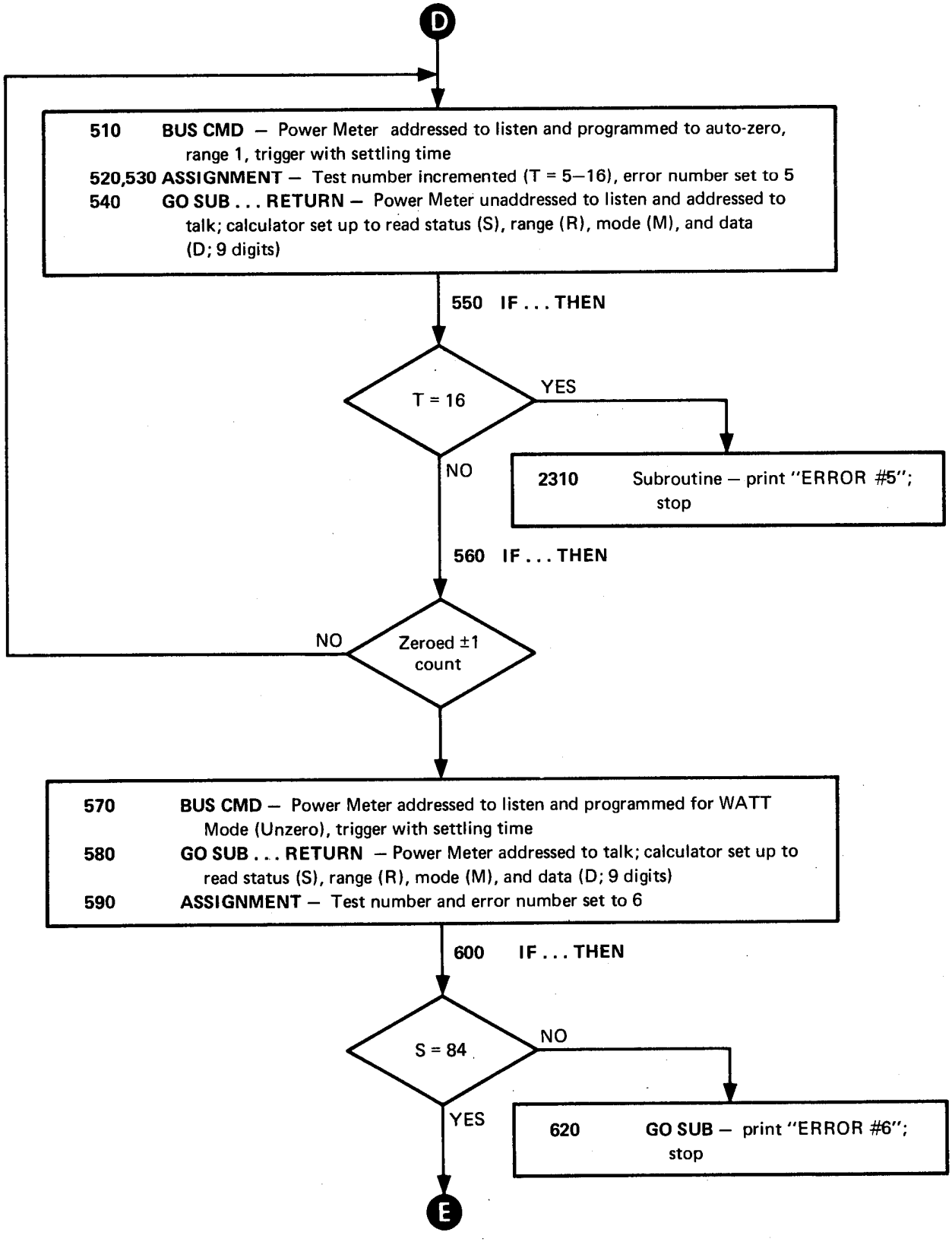

Figure 8-16. HP-IB Verification Program (HP 9830A Calculator) (10 of 25)

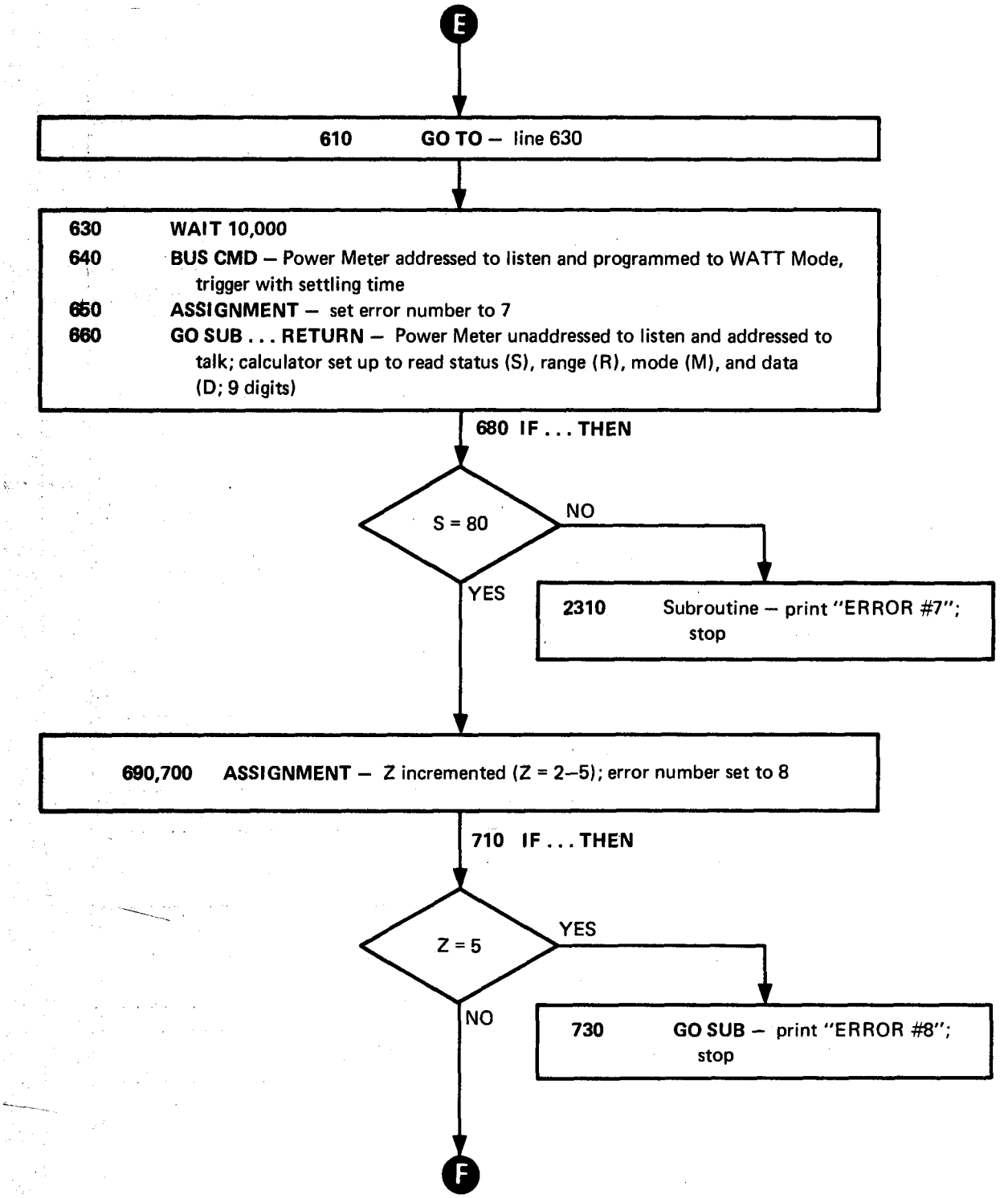

Figure 8-16. HP-IB Verification Program (HP 9830A Calculator) (11 of 25)

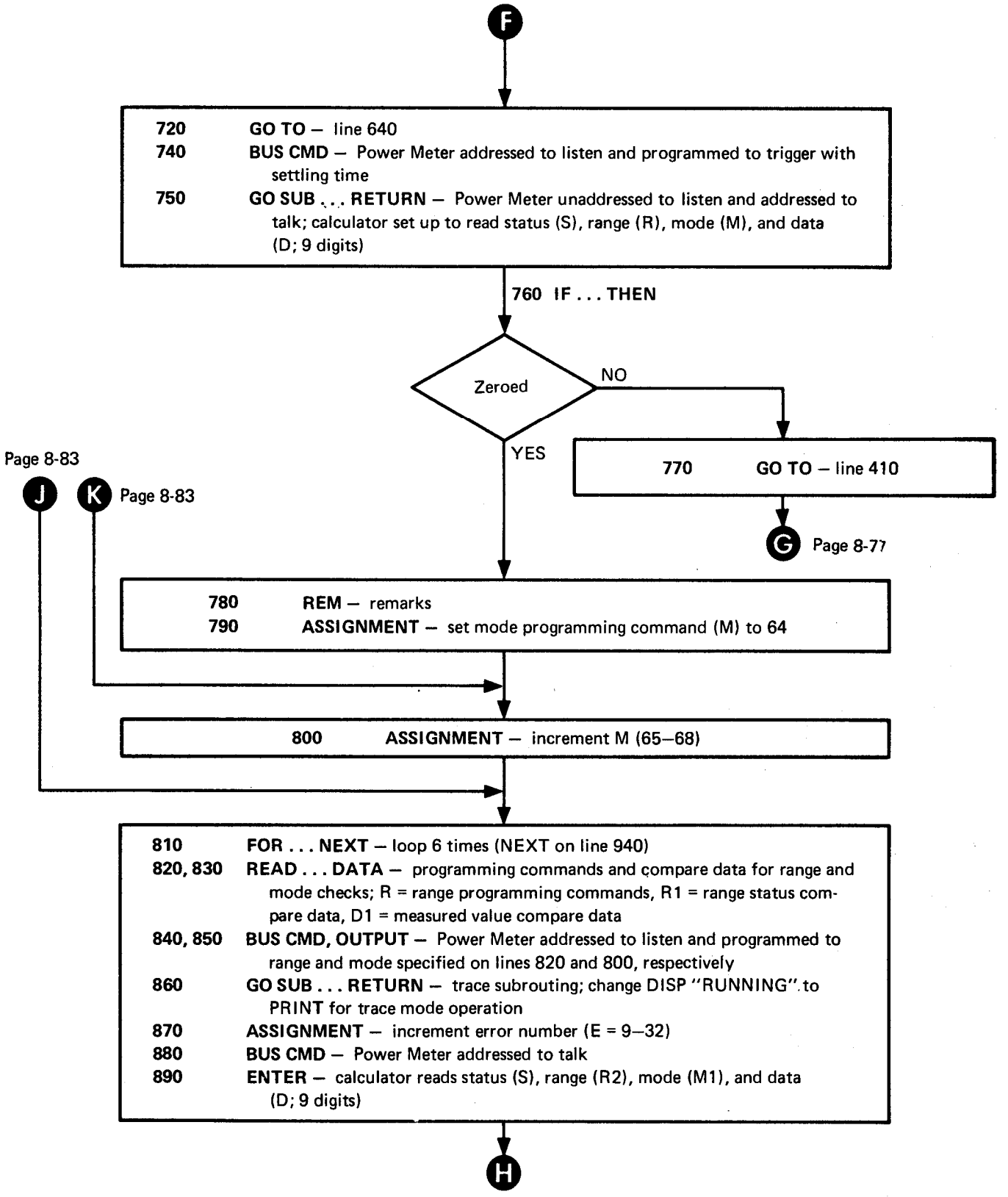

Figure 8-16. HP-IB Verification Program (HP 9830A Calculator) (12 of 25)

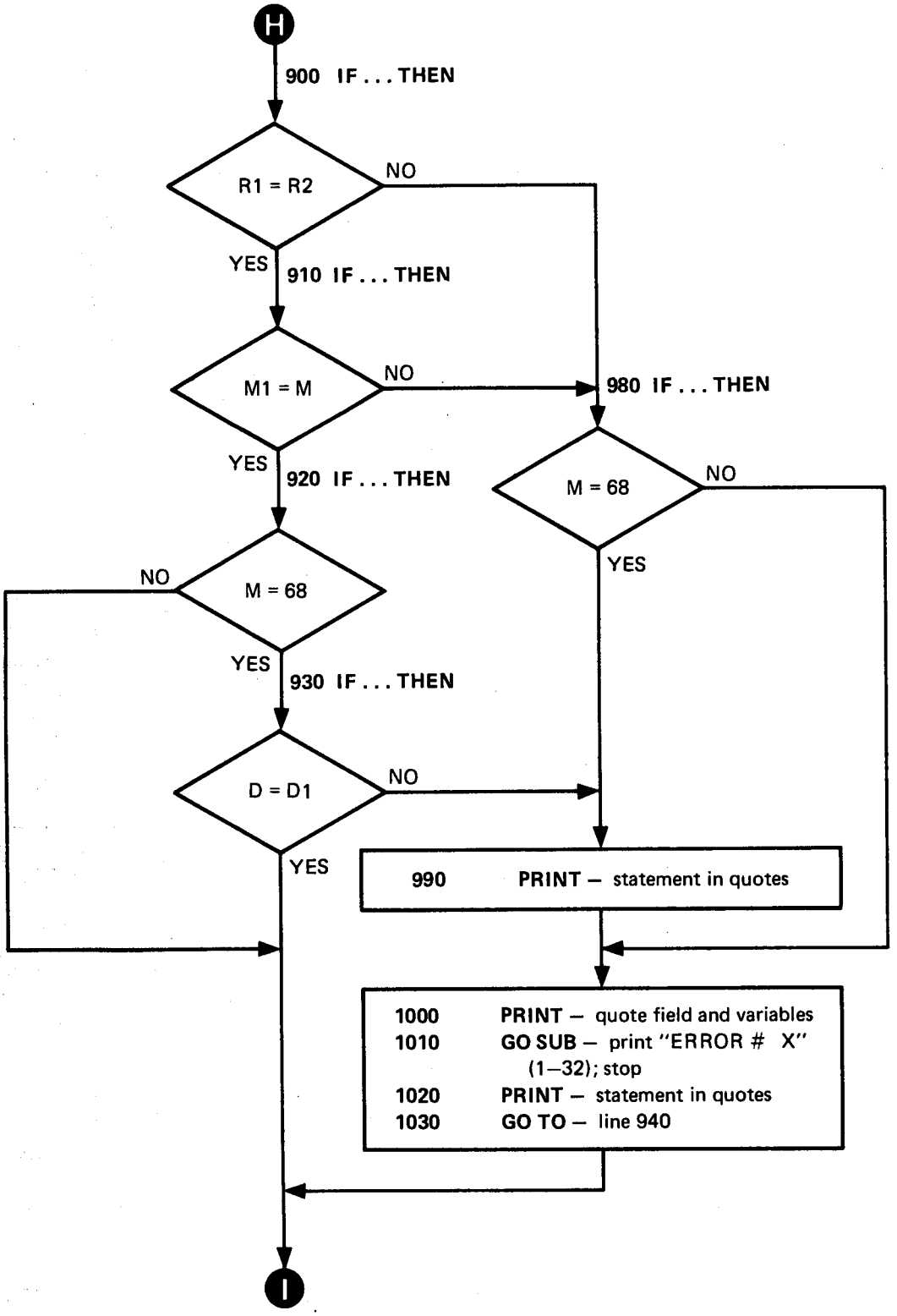

Figure 8-16. HP-IB Verification Program (HP 9830A Calculator) (13 of 25)

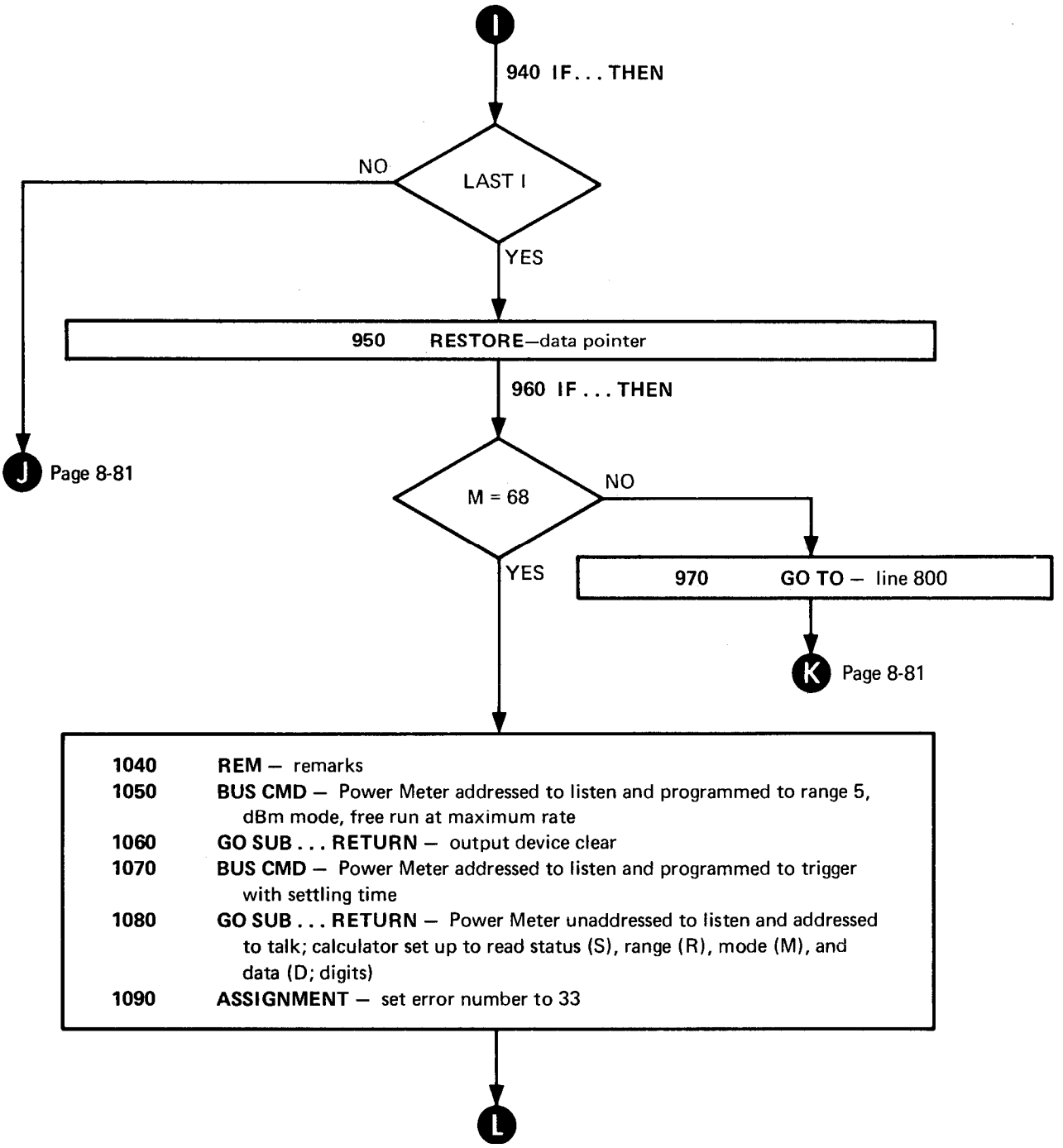

Figure 8-16. HP-IB Verification Program (HP 9830A Calculator) (14 of 25)

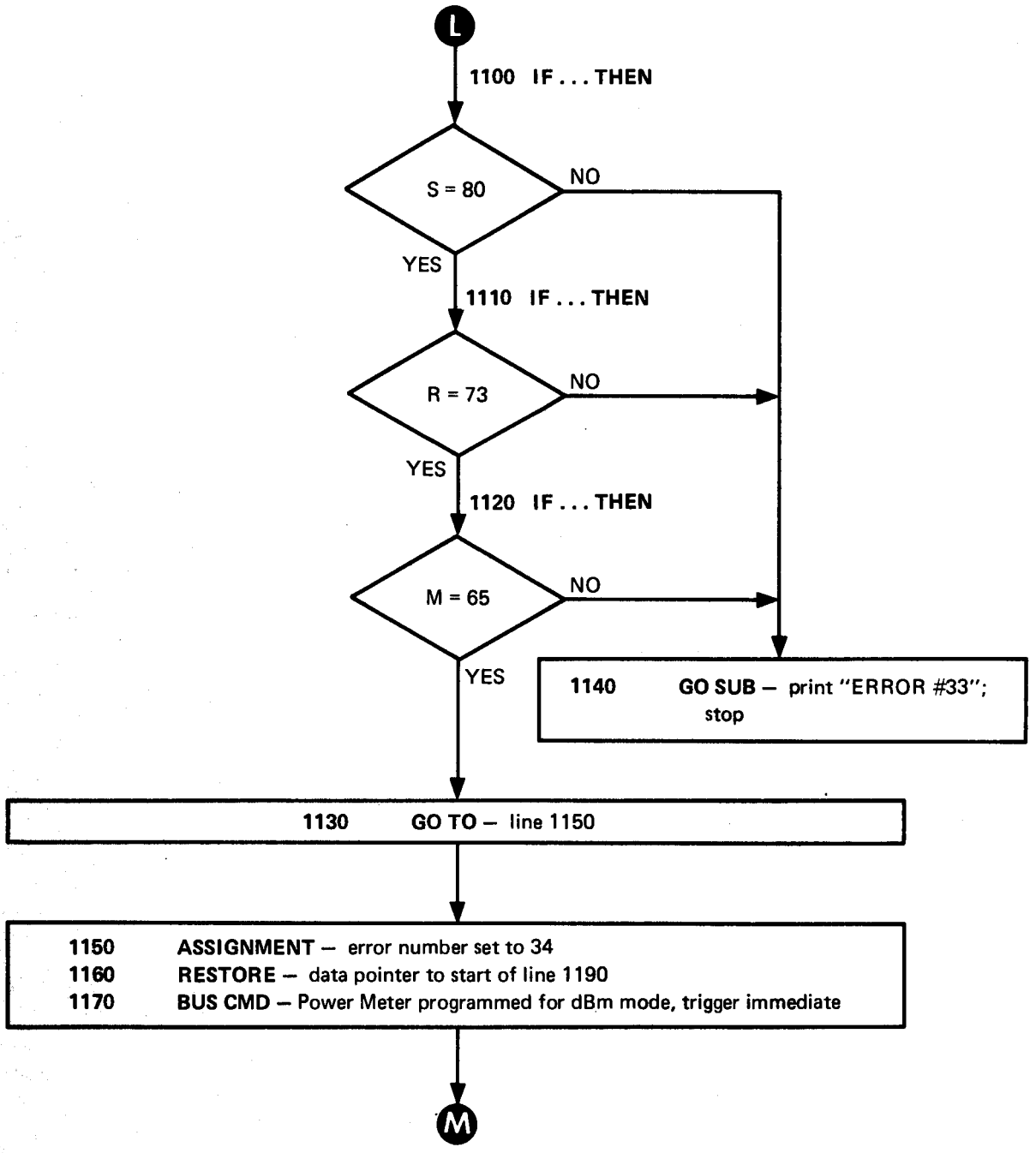

Figure 8-16. HP-IB Verification Program (HP 9830A Calculator) (15 of 25)

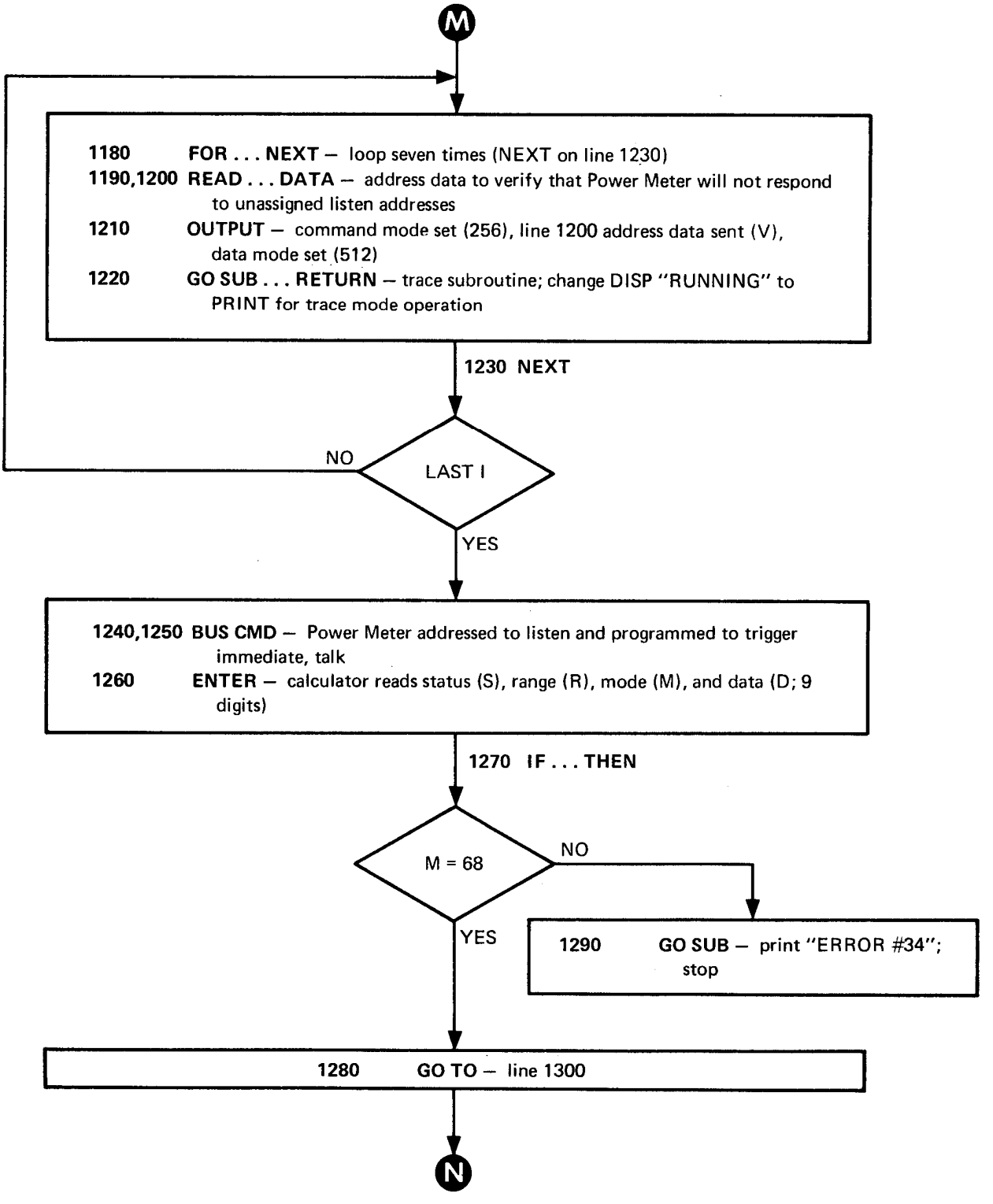

Figure 8-16. HP-IB Verification Program (HP 9830A Calculator) (16 of 25)

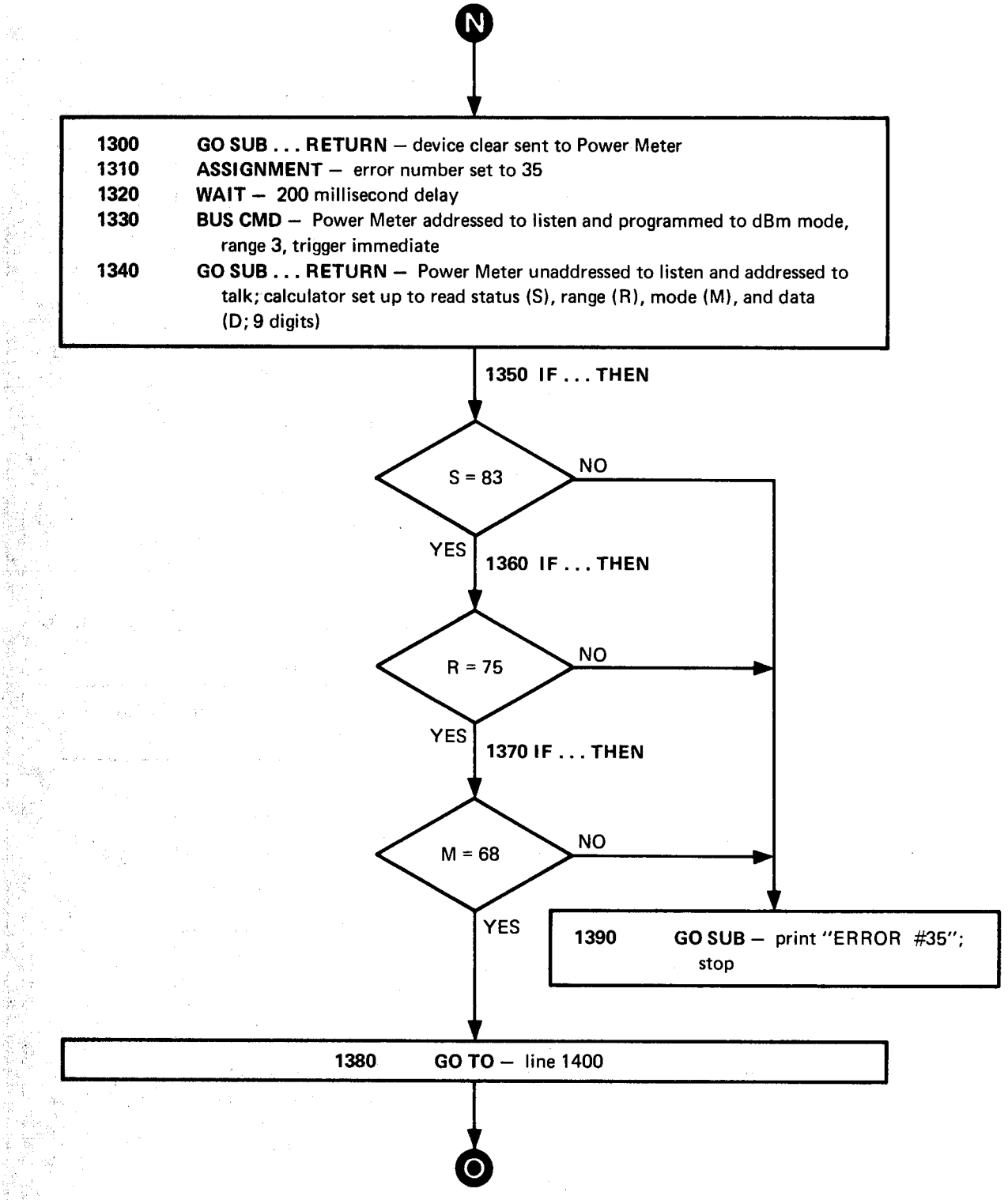

Figure 8-16. HP-IB Verification Program (HP 9830A Calculator) (17 of 25)

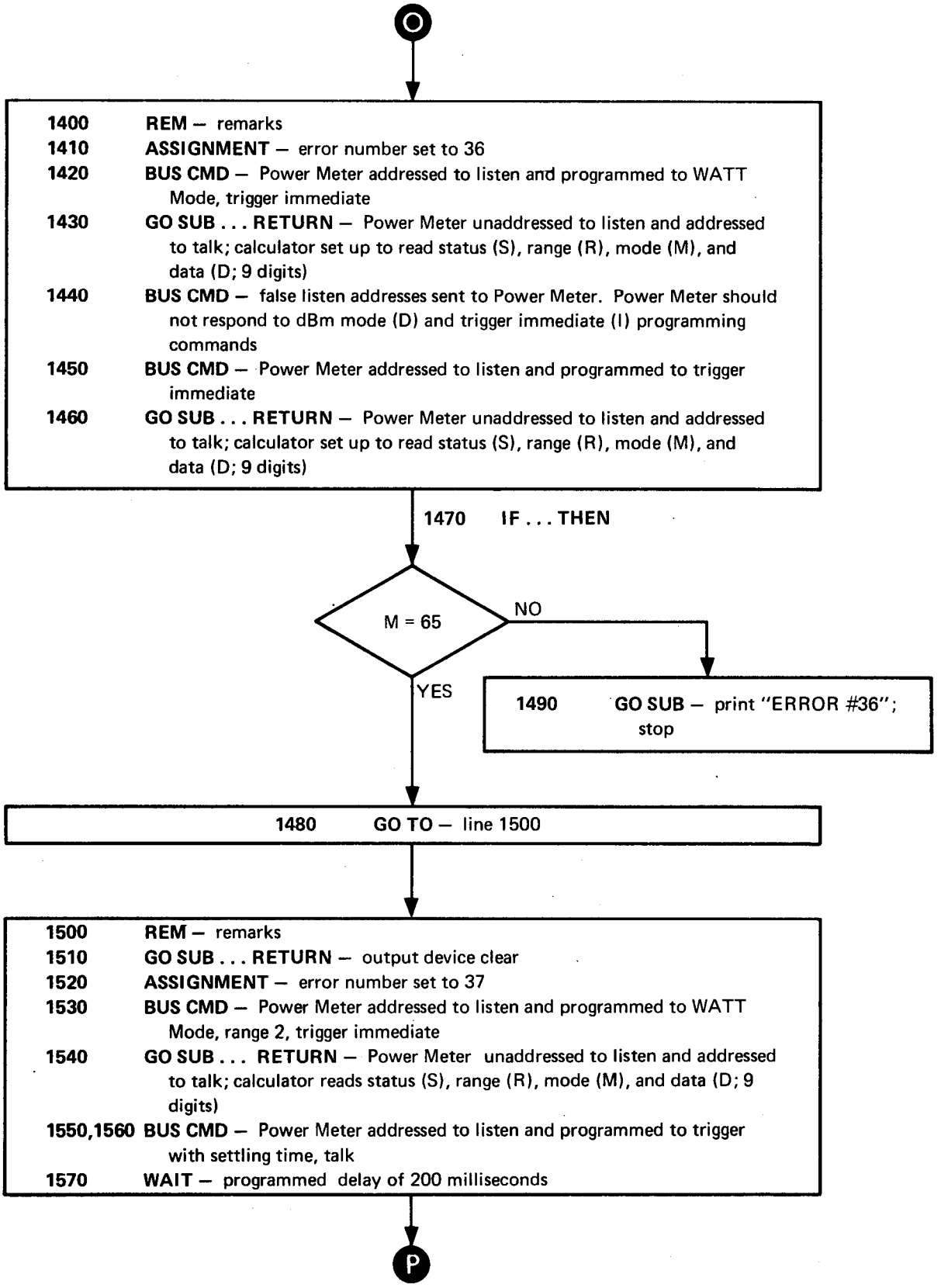

Figure 8-16. HP-IB Verification Program (HP 9830A Calculator) (18 of 25)

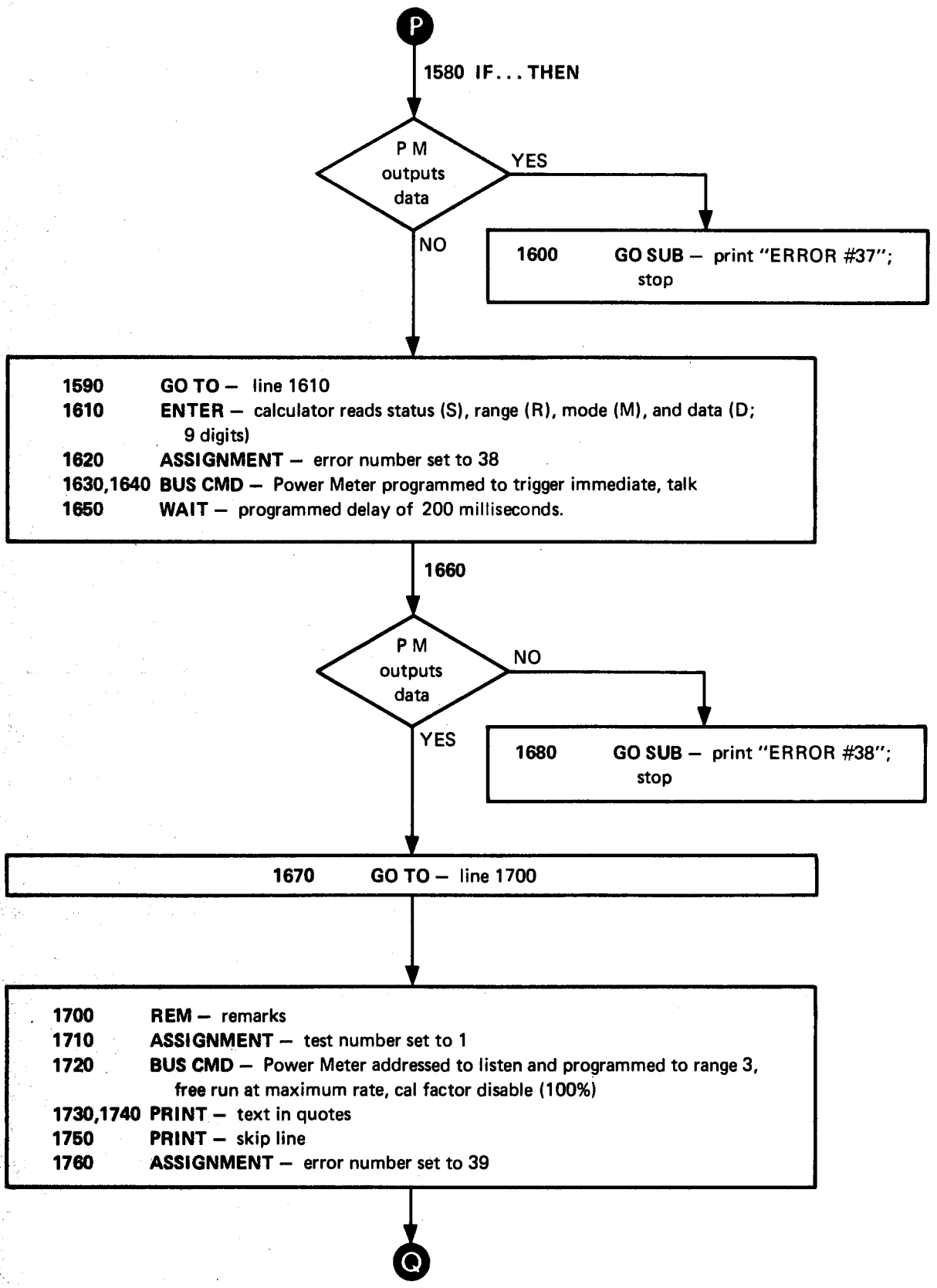

Figure 8-16. HP-IB Verification Program (HP 9830A Calculator) (19 of 25)

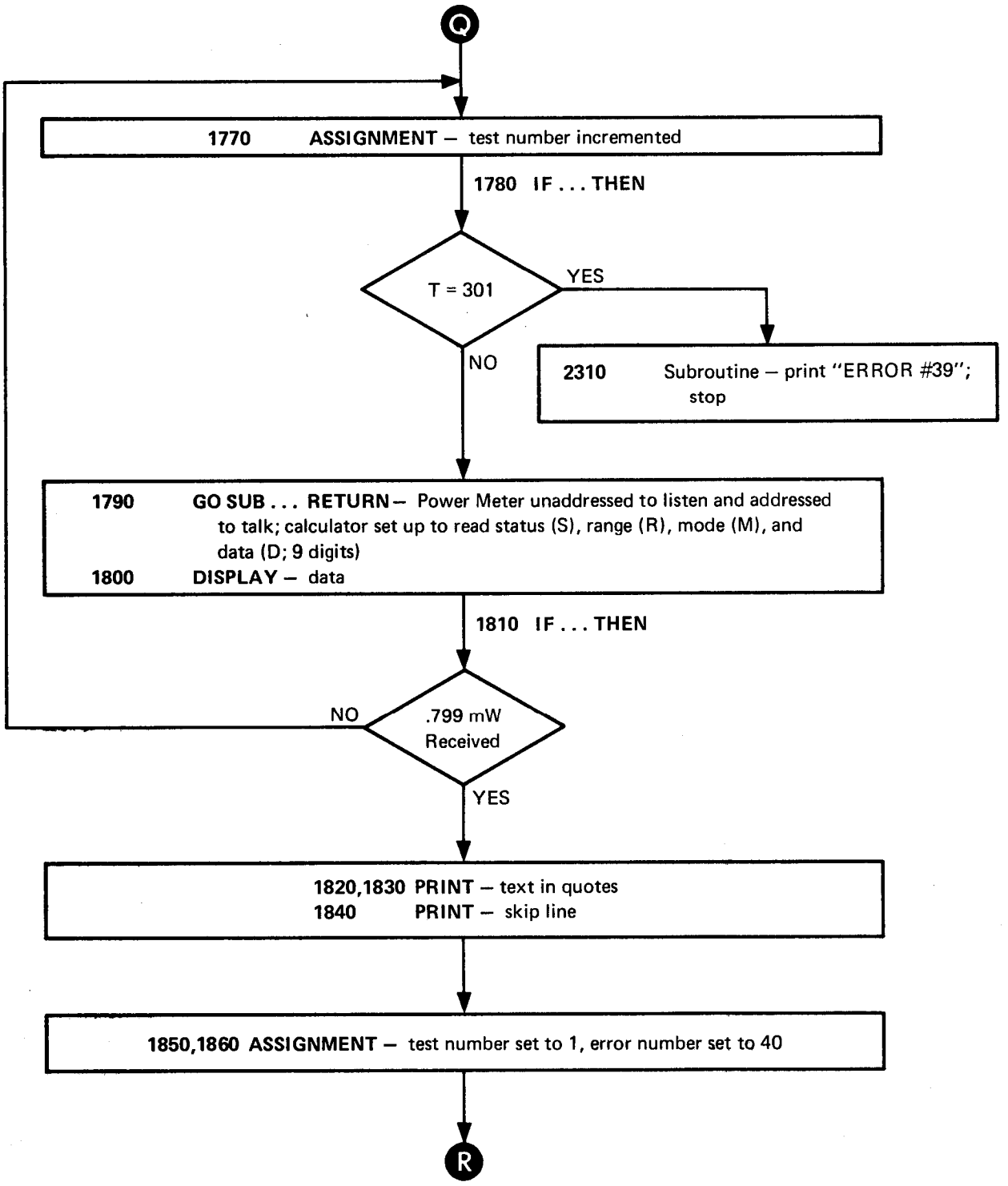

Figure 8-16. HP-IB Verification Program (HP 9830A Calculator) (20 of 25)

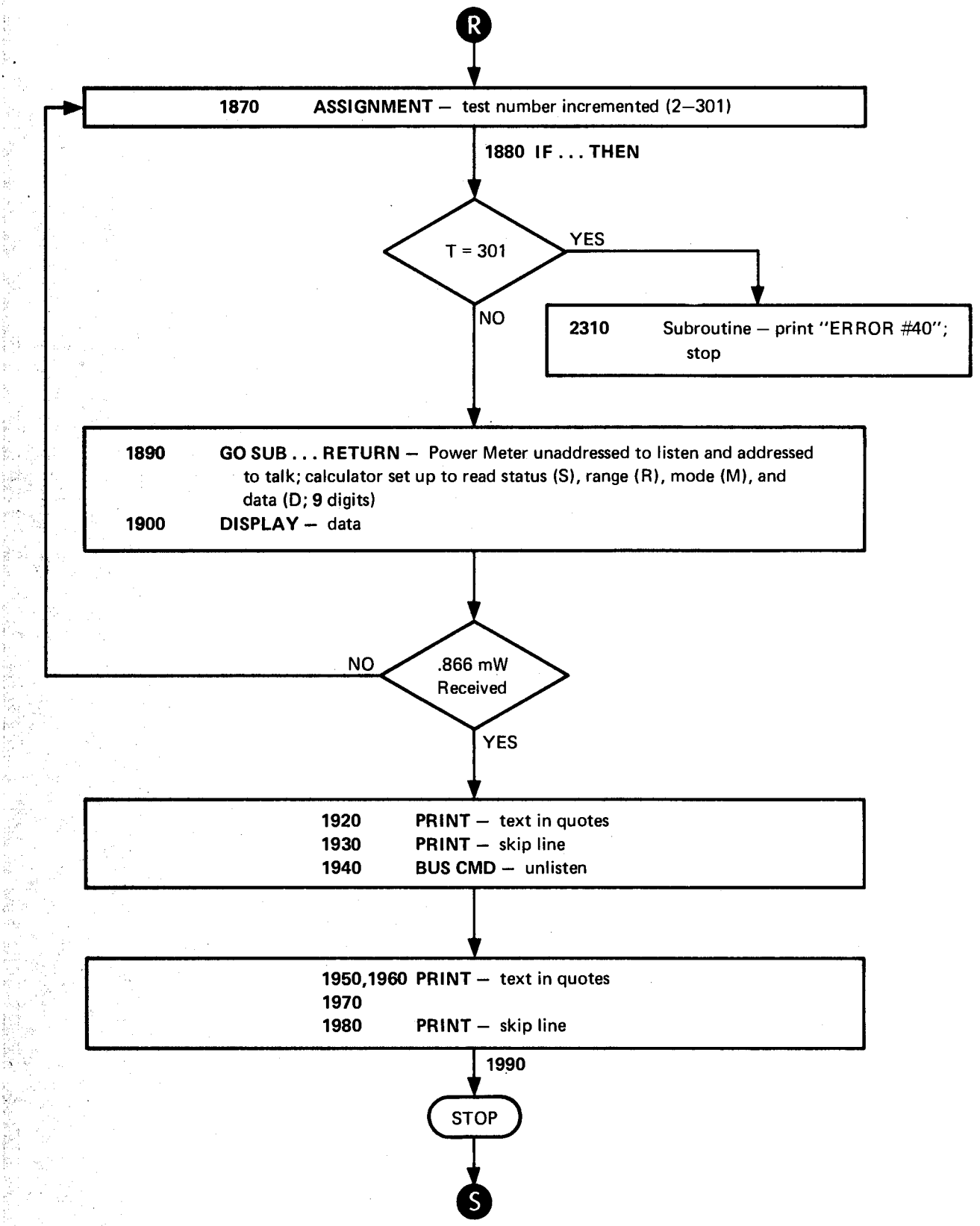

Figure 8-16. HP-IB Verification Program (HP 9830A Calculator) (21 of 25)

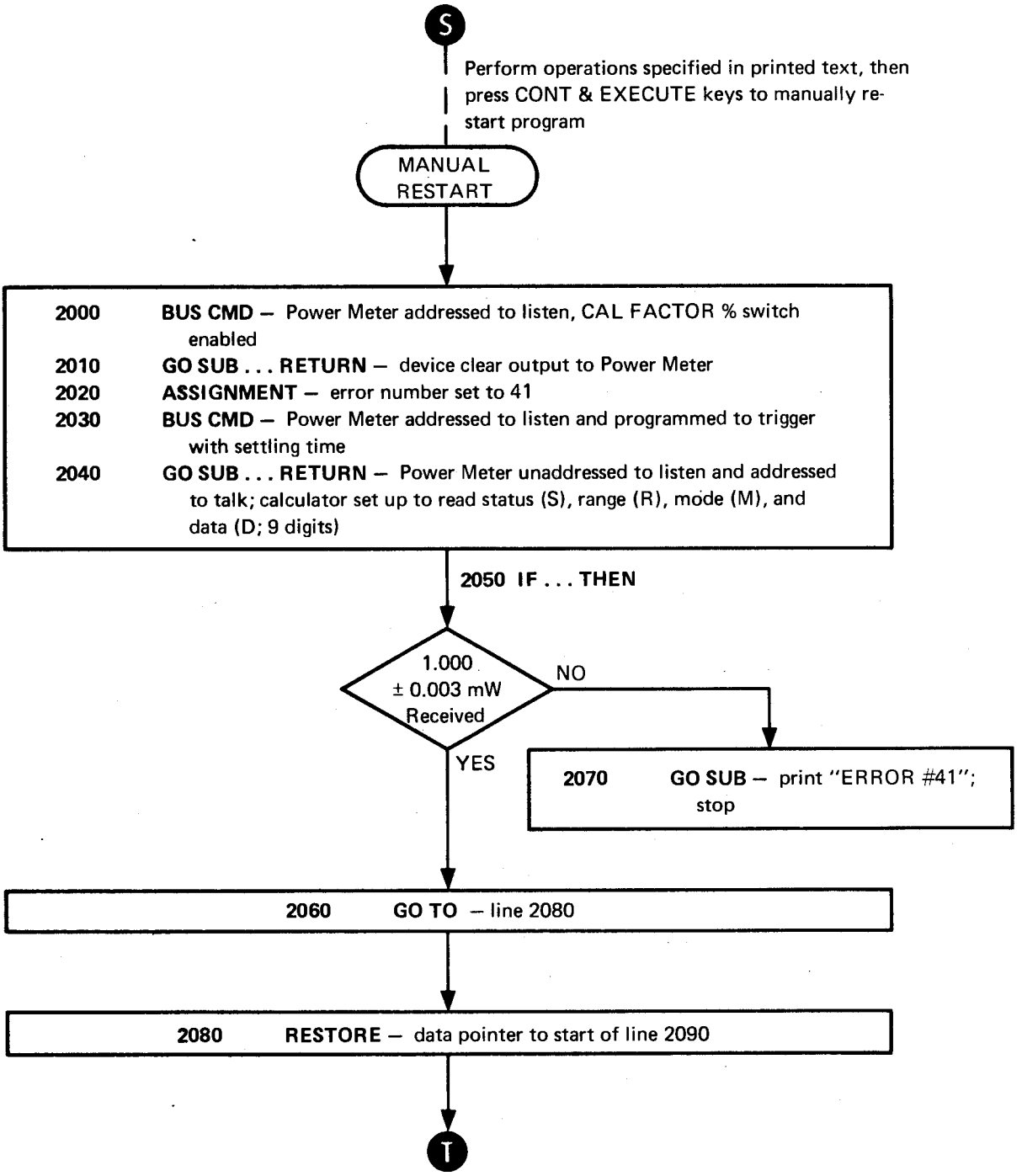

Figure 8-16. HP-IB Verification Program (HP 9830A Calculator) (22 of 25)

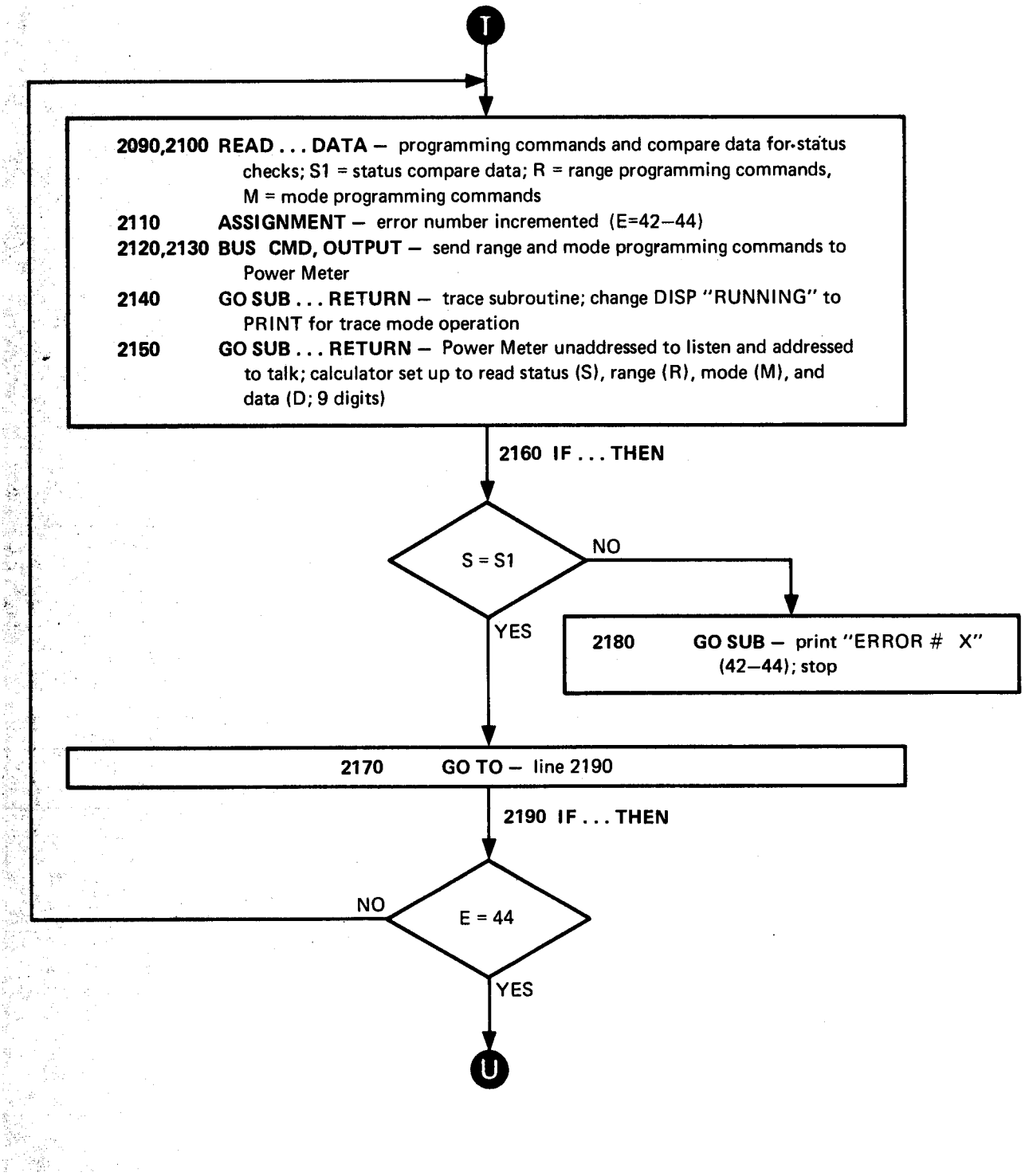

Figure 8-16. HP-IB Verification Program (HP 9830A Calculator) (23 of 25)

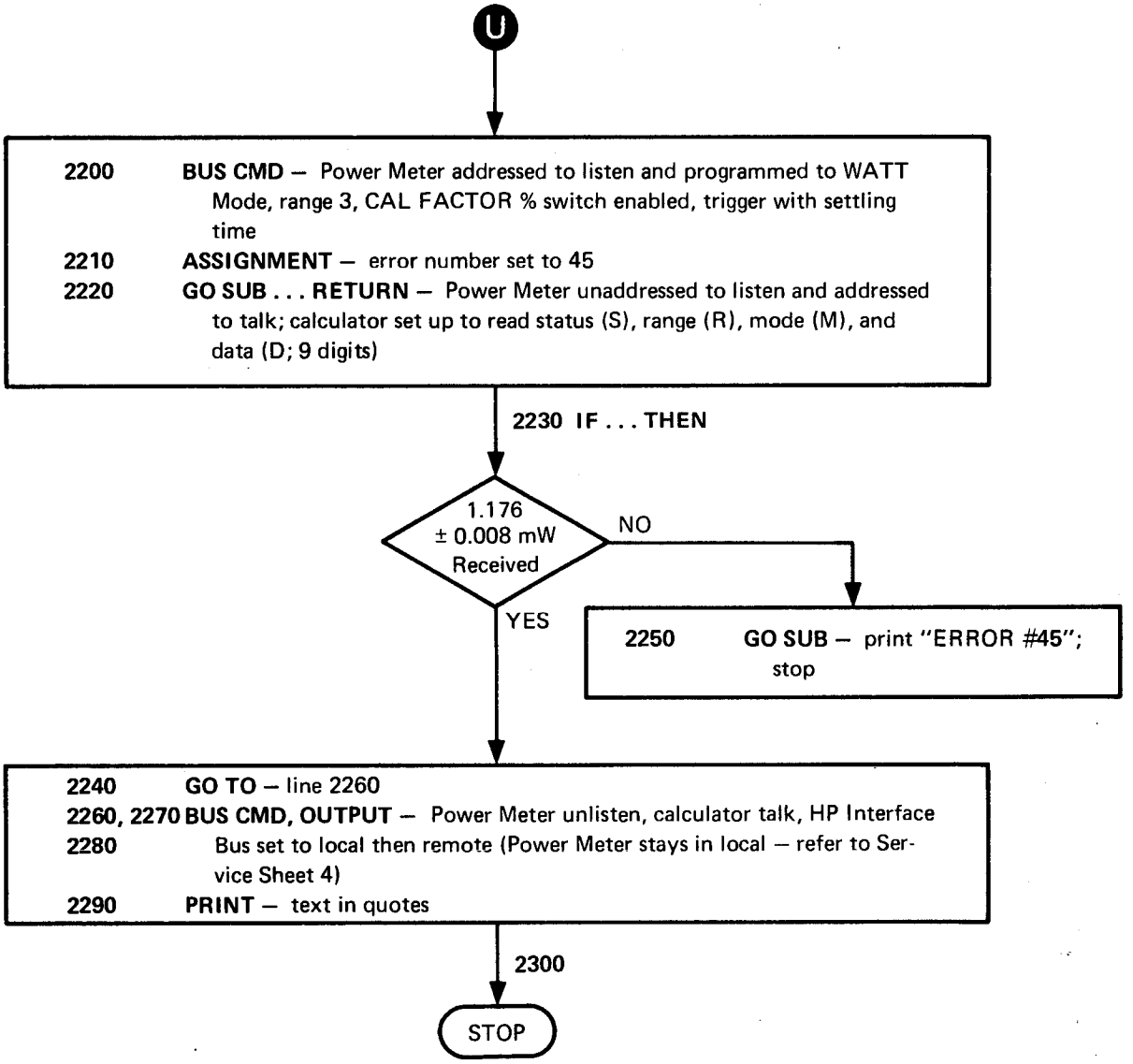

Figure 8-16. HP-IB Verification Program (HP 9830A Calculator) (24 of 25)

```
2310    PRINT - error number
2320    STOP _ (press CONT EXECUTE to restart program at line 2330 or RUN
          EXECUTE to restart program at line 10). (Line 2320 may be elimenatedN
          to run listing all Errors).
2330    RETURN – to line following GO SUB branch to subroutine
```

Trace Subroutine

```
2340    REM - Adds PRINT for TRACE
2350    DISPLAY - "RUNNING"
2360    RETURN – to line following GO SUB branch to subroutine
```

Enter Data Subroutine

```
2370    REM - enter data
2380    BUS CMD - Power Meter programmed to talk, calculator to listen
2390    ENTER - calculator set up to read status (S), range (R), mode (M), and
          data (D; 9 digits)
2400    RETURN - to line following GO SUB branch to subroutine
```

Device Clear Subroutine

```
2410    REM – DEV CLR
2420    BUS CMD – Power Meter unlistening calculator talk
2430    OUTPUT – Set HP Interface Bus to command mode, output device clear,
          then set HP Interface Bus to data mode
2440    GO SUB – trace subroutine
```

```
2450    RETURN–to line following GO SUB reference to subroutine
2460    END
```

Figure 8-16. HP-IB Verification Program (HP 9830A Calculator) (25 of 25)

```
0:
CMD "▒"⊢
1:
CMD "?U-","R";
CMD "?M5"⊢
2:
GSB "WAIT1"⊢
3:
1→R1→R2→R3⊢
4:
IF RDS 13≠3;GTO
"ERROR"⊢
5:
CMD "?U"⊢
6:
FMT Y3,Z;WRT 13⊢
7:
CMD "?U-","RC"⊢
8:
CMD "?U"⊢
9:
FMT Y4,Z;WRT 13⊢
10:
"TEST1";R1+1→R1;
2→R2⊢
11:
CMD "?M5"⊢
12:
GSB "RDB"⊢
13:
IF C=67;GTO "ERR
OR"⊢
14:
IF R1=2;GTO "TES
T1"⊢
15:
3→R2;CMD "?U-";
FMT Y3,Z;WRT 13⊢
16:
"TEST2";CMD "?U-
","T","?M5"⊢
17:
R1+1→R1⊢
18:
GSB "RDB"⊢
19:
IF R1=4;GTO "TES
T2"⊢
20:
IF C≠67;GTO "ERR
OR"⊢
21:
4→R1→R2⊢
22:
"TEST3";CMD "?U-
","Z2T","?M5"⊢
23:
GSB "RDB"⊢
24:
IF A≠85;GTO "ERR
OR"⊢
25:
"TEST4";CMD "?U-
","Z1T","?M5"⊢
26:
R1+1→R1;5→R2⊢
27:
GSB "RDB"⊢
28:
IF R1=16;GTO "ER
ROR"⊢
29:
IF AB(R7*1000000
00)>1.5;GTO "TES
T4"⊢
30:
"TEST5";CMD "?U-
","AT","?M5"⊢
31:
GSB "RDB"⊢
32:
6→R2→R1⊢
33:
IF A≠84;GTO "ERR
OR"⊢
34:
"TEST6";CMD "?U-
","AT"⊢
35:
R1+1→R1⊢
36:
CMD "?M5"⊢
37:
7→R2⊢
38:
GSB "RDB"⊢
39:
IF R1=17;GTO "ER
ROR"⊢
40:
IF A≠80;GTO "TES
T6"⊢
41:
"TEST7";R3+1→R3;
```

Figure 8-17. HP-IB Verification Program (HP 9820A Calculator) (1 of 4)

```
8→R2⊢
42:
IF K3=5;GTO "ERR
OR"⊢
43:
"TEST8";CMD "?U-
";"T","?M5"⊢
44:
GSB "RDB"⊢
45:
IF N≤4+8.0000000
1;GTO 47⊢
46:
GTO "TEST4"⊢
47:
PRT "MODE CHECKS
"⊢
48:
48→B5;2→R2⊢
49:
CMD "Ξ"⊢
50:
64→R6;0→R8;R5+1→
R5⊢
51:
CMD "?U-";FXD 0.
2;WTB 13,R5;FMT
"T";WRT 13⊢
52:
R6+1→R6;R5+1→R5⊢
53:
CMD "?U-";FMT
FXD 0.2;WTB 13;R
6;FMT "T";WRT 13
;FMT Y2,Z;WRT 13
⊢
54:
CMD "?M5"⊢
55:
GSB "RDB"⊢
56:
IF R6≠C;GTO "ERR
OR"⊢
57:
IF R8≠4;GTO 52⊢
58:
IF B≠77;GTO 49⊢
59:
PRT "DEVICE CLEA
R"⊢
60:
PRT "CHECKS"⊢
61:
CMD "?U-","5DR"⊢
62:
CMD "Ξ"⊢
63:
CMD "?U-","T","?
M5"⊢
64:
33→R2⊢
65:
GSB "RDB"⊢
66:
IF A≠80;GTO "ERR
OR"⊢
67:
IF B≠73;GTO "ERR
OR"⊢
68:
IF C≠65;GTO "ERR
OR"⊢
69:
34→R2⊢
70:
CMD "?U-","DI"⊢
71:
CMD "G"⊢
72:
CMD "?M5"⊢
73:
GSB "RDB"⊢
74:
IF C≠68;GTO "ERR
OR"⊢
75:
35→R2⊢
76:
CMD "Ξ"⊢
77:
CMD "?U-","D3I";
"?M5"⊢
78:
GSB "RDB"⊢
79:
IF A≠83;GTO "ERR
OR"⊢
80:
IF B≠75;GTO "ERR
OR"⊢
81:
```

Figure 8-17. HP-IB Verification Program (HP 9820A Calculator) (2 of 4)

```
IF C#68;GTO "ERR
OR"
82:
PRT "ADDRESS CHE
CKS"
83:
36→R2
84:
CMD "?U-","5A1",
"?M5"
85:
GSB "RDB"
86:
CMD "?U%)=/","DI
"
87:
CMD "?U-","I","?
M5"
88:
GSB "RDB"
89:
IF C#65;GTO "ERR
OR"
90:
PRT "TRIGGER CHE
CKS"
91:
PRT "FAST/SLOW"
92:
CMD "
"
93:
37→R2
94:
CMD "?U-","A2I",
"?M5"
95:
GSB "RDB"
96:
CMD "?U-","T","?
M5"
97:
GSB "WAIT2"
98:
IF RDS 13#2;GTO
"ERROR"
99:
CMD "?M5"
100:
GSB "RDB"
101:
38→R2
102:
CMD "?U-","I","?
M5"
103:
GSB "WAIT2"
104:
IF RDS 13#3;GTO
"ERROR"
105:
PRT "436 POWER "
106:
PRT "CONNECTED";
1→R8
107:
CMD "?U-","3R+"
108:
PRT "CONNECT SEN
SOR "
109:
PRT "POWER REF O
N"
110:
PRT "SET CAL ADJ
 FOR"
111:
PRT ".799MW"
112:
39→R2;R8+1→R8
113:
IF R8=301;GTO "E
RROR"
114:
CMD "?M5"
115:
FMT *;RED 13,X
116:
DSP "DATA=",X
117:
IF X#0.000799;
GTO 114
118:
PRT ".799MW RECE
IVED"
119:
PRT "SET CAL ADJ
 .866MW"
120:
40→R2;1→R8
121:
R8+1→R8
122:
IF R8=301;GTO "E
```

Figure 8-17. HP-IB Verification Program (HP 9820A Calculator) (3 of 4)

```
RROR"⊢
123:
CMD "?M5"⊢
124:
FMT *;RED 13,X
125:
DSP "DATA =",X⊢
126:
IF X=0.000866;
GTO 123⊢
127:
PRT ".866 MW REC
EIVED"⊢
128:
CMD "?"⊢
129:
PRT "ADJ 436A FO
R"⊢
130:
PRT "1.000MW"⊢
131:
PRT "SET CAL FAC
TOR"⊢
132:
PRT "TO 85"⊢
133:
STP ⊢
134:
CMD "?U-","-T"⊢
135:
CMD "Z"⊢
136:
41→R2⊢
137:
CMD "?U-";"T";"?
M5"⊢
138:
GSB "RDB"⊢
139:
IF X>0.001003;
GTO "ERROR"⊢
140:
IF X≤0.000997;
GTO "ERROR"⊢
141:
CMD "Z";FMT Y3,Z
;WRT 13⊢
142:
81→R4;53→R5;65→R
6;42→R2⊢
143:
CMD "?U-"⊢
144:
FMT FXD 0.2;OTB
13,R5;WTB 13,R6;
FMT "T";WRT 13⊢
145:
CMD "?M5"⊢
146:
GSB "RDB"⊢
147:
IF A≠R4;GTO "ERR
OR"⊢
148:
IF R2=42;GTO 151
⊢
149:
IF R2=43;GTO 152
⊢
150:
IF R2=44;GTO 153
⊢
151:
82→R4;50→R5;43→R
2;GTO 143⊢
152:
83→R4;53→R5;68→R
6;44→R2;GTO 143⊢
153:
CMD "?U-","A3-T"
,"?M5"⊢
154:
45→R2⊢
155:
GSB "RDB"⊢
156:
IF X>0.001184;
GTO "ERROR"⊢
157:
IF X≤0.001168;
GTO "ERROR"⊢
158:
CMD "?U-"⊢
159:
FMT 4,Z;WRT 13⊢
160:
FMT 3,Z;WRT 13⊢
161:
PRT "TEST COMPLE
TE"⊢
162:
END ⊢
163:
"RDB";RDB 13→A;
RDB 13→B;RDB 13→
C;FMT *;RED 13,X
⊢
164:
FXD 9.2;PRT A,B,
C;FXD 6.6;PRT X⊢
165:
RET ⊢
166:
"ERROR";FXD 0.2;
PRT "ERROR=",R2⊢
167:
"STOP"⊢
168:
"WAIT1";0→Y⊢
169:
Y+1→Y⊢
170:
IF Y≠278;GTO 169
⊢
171:
RET ⊢
172:
"WAIT2";0→Y⊢
173:
Y+1→Y⊢
174:
IF Y≠11;GTO 173⊢
175:
RET ⊢
176:
END ⊢
R67
```

Figure 8-17. HP-IB Verification Program (HP 9820A Calculator) (4 of 4)

Table 8-4. HP-IB Circuit Troubleshooting (1 of 18)

Error No.	Problem and Description	Corrective Action
None	**Problem** - Program hangs up without printing out error number. (RUNNING does not flash periodcally on calculator display.) **Description -** Signal output from Power Meter causes calculator to lock up.	A. Check that IFC input to Power Meter (Service Sheet 11) is not being held low by some circuit in Power Meter. B. Check that Power Meter DAV output (Service Sheet 12) is not held low, indicating that Power Meter has data output for calculator. C. Turn power on and off to Power Meter, restart program at line 10 (STEP PROGRAM) and verify handshake timing (refer to Service Sheet 4).
1	**Problem –** Power Meter does not output data after being addressed to talk. **Description -** HP Interface Bus is set to local. (Remote Enable line false), and Power Meter is addressed to talk. Calculator I/O status is then checked to verify that Power Meter outputs data character during Display and Remote Talk Subroutine.	Turn power on and off to Power Meter. Then initialize test program (INIT key) and use STEP key to execute test program line-by-line. Check that the following indications are obtained for line 110: A. Power Meter is addressed to talk. B. The following display is obtained with logic analyzer connetted normally (refer to troubleshooting example) and set up for single sweep, TRIGGER WORD 044_8 (Display and Remote Talk Subroutine Address). 00 010 011 15 00 100 100 16 10 100 101 1 00 100 110 2 01 001 000 3 01 001 001 4 11 001 010 5 10 100 100 6 00 010 010 7 00 010 011 8 10 100 100 9 00 010 010 10 00 010 011 11 10 100 100 12 00 010 010 13 00 010 011 14
2	**Problem -** Power Meter data output indicates dB [REF] mode selected. **Description –** 1. HP Interface Bus is set to remote, then Power Meter is addressed to listen and programmed to free run at maximum rate, dB [REF] mode. 2. HP Interface Bus is set to local to disable remote operation of Power Meter. 3. Power Meter is addressed to talk and calculator enters data. Since local operation is enabled, the Power Meter mode output should indicate the mode selected by the front panel switches.	Turn power on and off to Power Meter. Go to line 110 and use STEP key to execute program line-by-line. Check that the following indications are obtained. **a. Line 160** 1) Power Meter is unaddressed to talk. 2) Operating program branches from Display and Remote Talk Subroutine to Local/Remote Branch Subroutine. Program then continues to free run as previously verified for local operation. **b. Line 190** 1) Power Meter is addressed to listen and configured for remote operation. 2) Measurement rate select logic stores programming command and provides low H HOLD and high H FAST outputs. 3) Mode Select logic stores programming command and provides dB [REF] mode output.

Table 8-4. HP-IB Circuit Troubleshooting (2 of 18)

Error No.	Problem and Description	Corrective Action
2 (cont)		4) Operating program branches from Local/Remote Branch Subroutine to Remote Initialize Subroutine. 5) The following display is observed with logic analyzer connected normally (refer to troubleshooting example) and set up for single sweep, TRIGGER WORD 012_8 (Remote Initialize Subroutine Address). 00 001 010 1 — 01 000 011 9 00 001 011 2 — 01 000 011 10 00 001 101 3 — 01 000 011 11 01 000 001 4 — 01 000 011 12 01 000 010 5 — 01 000 011 13 01 000 011 6 — 01 000 011 14 01 000 011 7 — 01 000 011 15 01 000 011 8 — 01 000 011 16 6) Operating program brances from Remote Initialize Subroutine to Measurement Subroutine, then continues to cycle normally as previously verified. **c. Line 210-** Power Meter configured for local operation. **d. Line 250/2380** - Power Meter is addressed to talk. **e. Line 250/2390** - Power Meter outputs complete data message. Verify data message per Read Byte Subroutine starting at line 5000.
3	**Problem** - Power Meter data output does not indioate dB[REF] mode selected. **Description** - The Power Meter was programmed to the dB [REF] mode in the previous test. Then the HP Interface Bus was set to local. For this test, the HP Interface Bus is set to remote and the Power Meter is programmed to take a triggered measurement with settling time. Thus, the dB [REF] output of the mode select logic should be loaded into the mode register during the operating program Remote Initialize Subroutine and the Power Meter should output MODE data character C during the Display and Remote Talk Subroutine.	Turn Power on and off to Power Meter. Then GO TO line 140, and use STEP key to execute program line-by-line. Check that the following indications are obtained: **a. Line 160** 1) Power Meter is unaddressed to talk. 2) Operating program branches from Display and Remote Talk Subroutine to Local Remote Branch Subroutine. Program then continues to free run as previously verified for local operation. **b. Line 190** 1) Power Meter is addressed to listen and configured for remote operation. 2) Measurement rate select logic stores programming command and provides low H HOLD and high H FAST outputs. 3) Mode select logic stores programming command and provides dB [REF] mode output. 4) Operating program branches from Local/Remote Branch Subroutine to Remote Initialize Subroutine.

Table 8-4. HP-IB Circuit Troubleshooting (3 of 18)

Error No.	Problem and Description	Corrective Action
3 (cont)		5) The following display is observed with logic analyzer connetted normally (refer to troubleshooting example) and set up for single sweep, TRIGGER WORD 012_8(Remote Initialize Subroutine Address). 00 001 010 1 — 01 000 011 9 00 001 011 2 — 01 000 011 10 00 001 101 3 — 01 000 011 11 01 000 001 4 — 01 000 011 12 01 000 010 5 — 01 000 011 13 01 000 011 6 — 01 000 011 14 01 000 011 7 — 01 000 011 15 01 000 011 8 — 01 000 011 16 6) The output of the mode select logic is loaded into the mode register (Service Sheet 3 during the Remote Initialize Subroutine). 7) Operating program branches from Remote Initialize Subroutine to Measurement Subroutine, then continues to cycle normally as previously verified. **c. Lines 210, 250, and 260-** previously verified. **d. Line 340-** (first pass) 1) Power Meter is addressed to listen and configured for remote operation. 2) H HOLD output of measurement rate select logic is set high by LTC instruction. 3) Operating program enters Display and Remote Talk Subroutine hold loop (addresses 022_8, 023_8, 024_8, 025_8). **e. Line 360/2390 -** (first pass) 1) Power Meter outputs complete data message (ignore data) then branches to Local/Remote Branch Subroutine. 2) Power Meter enters Local/Remote Branch Subroutine hold loop. **f. Line 340-** (second pass) 1) Measurement rate select logic provides low H HOLD output to initiate program cycle. Program branches to Remote Initialize Subroutine. 2) The following display is observed with the logic analyzer connected normally (refer to troubleshooting example) and set up for single sweep, TRIGGER WORD 012_8(Remote Initialize Subroutine address).

Table 8-4. HP-1B Circuit Troubleshooting (4 of 18)

Error No.	Problem and Description	Corrective Action
3 (cont)		00 001 010 1 01 010 111 9 00 001 011 2 01 010 111 10 10 001 101 3 01 010 111 11 00 001 110 4 01 010 111 12 00 001 111 5 01 010 111 13 10 011 001 6 01 010 111 14 10 011 110 7 01 010 111 15 01 010 111 8 01 010 111 16 3) Operating program branches from Delay Subroutine to Auto Zero Subroutine and cycles to Display and Remote Talk Subroutine. 4) Power Meter enters Display and Remote Talk Subroutine hold loop. **g. Line 360/2390 -** (second pass) – Power Meter outputs complete data message. Verify data message per Read Byte Subroutine starting at line 5000.
4, 4.5	**Error -** If "ERROR #4" is printed, the Power Meter operating cycle is not synced to the trigger with settling time programming command. If "ERROR # 4" and "ERROR #4.5" are printed, the Power Meter did not respond properly to one or more of the programming commands. **Description -** 1. The error number is set to 4 and the Power Meter is programmed to auto zero, range 2, and trigger with settling time. Thus the Power Meter should output STATUS character U during the Display and Remote Talk Subroutine, thereby indicating that the auto zero loop is enabled, that it is operating on some range other than one, and that the input signal level is UNDER RANGE.	A. Turn power on and off to Power Meter, then manually send the following program command: CMD"?U–","T". Check that the programming command configures Power Meter for remote operation and causes operating program to enter Display and Remote Talk Subroutine hold loop (addresses 022_8, 023_8, 024_8, 025_8). **NOTE** *H HOLD output of measurement rate select logic is set low by programming command and reset high by LTC instruction generated at start of Display and Remote Talk Subroutine.* B. GO TO line 410 and use STEP key to execute program line-by-line. Check that the following indications are obtained. **a. Line 420-** 1) Auto zero enable logic stores auto zero programming command and provides auto zero enable output. 2) Range select logic stores range programming command and provides range 2 output. 3) H HOLD output of measurement rate select logic set low by trigger with settling time programming command. 4) Operating program branches from Display and Remote Talk Subroutine to Local/Remote Branch Subroutine. 5) Operating program branches to Remote Initialize Subroutine and the following display is observed with logic analyzer connected normally and set up for single

Table 8-4. HP-IB Circuit Troubleshooting (5 of 18)

Error No.	Problem and Description	Corrective Action
4, 4.5 [cent)	**Description (cont'd)** 2. The error number is set to 4.5 and the programming commands and status check are repeated. Thus, if error number 4 is detected and error number 4.5 is not detected, it indicates that the first Power Meter data output occurred before the remote programming commands were accessed by the operating program during the Remote Initialize Subroutine. (Power Meter free runs instead of entering hold loop until trigger input is received.) If both error numbers 4 and 4.5 are detected, it indicates that the Power Meter did not respond properly to the programming commands or that the Power Meter is improperly coding the STATUS output character.	B. **a. Line 420 (cont'd)** sweep, TRIGGER WORD 012_8(Remote Initialize Subroutine address). 10 001 010 1 — 01 010 111 9 00 001 011 2 — 01 010 111 10 10 001 101 3 — 01 010 111 11 00 001 110 4 — 01 010 111 12 10 001 111 5 — 01 010 111 13 00 011 000 6 — 01 010 111 14 10 011 110 7 — 01 010 111 15 01 010 111 8 — 01 010 111 16 6) Range counter (Service Sheet 3) is preset to range 2 and output of mode select logic is loaded into mode register during Remote Initialize Subroutine time. 7) Operating program branches from Remote Initialize Subroutine and cycles to Display and Remote Talk Subroutine hold loop (address 022_8, 023_8, 024_8, 025_8. **b. Line 430/2390 -** Power Meter outputs complete data message. Verify data message per Read Byte Subroutine starting at line 5000. **NOTE** *Status output is generated by buffering HOR and HUR outputs of over/under range decoder and YM3 output of mode select logic. For a description of circuit operation for this test, refer to Service Sheet 3, Mode Selection and Log Under-Range Registration.*
5	**Error –** Power Meter does not auto zero after ten tries. **Description -** The Power Meter is programmed to auto zero, range 1, trigger with settling time. Then the DATA output is checked to verify that it indicates 0.000 ± 0.001 µW. If the DATA output exceeds this value, the test number is incremented and the programming commands and DATA checks are repeated. If the DATA output still exceeds 0.000 µ 0.001 µW after ten tries (7=16), "ERROR # 5" is detected.	Change line 5000 to CMD "?U-", "ZIV". Then turn power on and off to Power Meter and check that RF power is not applied to Power Sensor. GO TO line 5000 and use STEP key to manually execute Read Byte Subroutine. Check that: **NOTE** *Program execution and circuit operation previously verified by local checkout procedure and preceding error checks except as specified below:* A. Range counter (Service Sheet 3) accepts range programming command and outputs range 1.

Table 8-4. HP-IB Circuit Troubleshooting (6 of 18)

Error No.	Problem and Description	Corrective Action
5 (cont)		B. Remote Initialize Subroutine address branching is as follows: 10 001 010 1 — 00 001 111 5 00 001 011 2 — 10 011 001 6 10 001 101 3 — 00 011 110 7 00 001 110 4 — 01 010 111 8 C. Range counter (Service Sheet 3) is preset to range 1 during Remote Initialize Subroutine. D. operating program branches from Remote Initialize Subroutine to Delay Subroutine. E. Power Meter outputs correct data characters
6	Error - Power Meter status output does not indicate auto zeroing, range 1. Description – The Power Meter was programmed to auto zero on range 1 for the previous test. For this test, the Power Meter is programmed to the Watt Mode and a measurement is triggered. Then the Power Meter output status is checked to ensure that the auto-zero timer circuit (Service Sheet 10) holds the Power Meter in an auto zero loop for a period of approximately four seconds after the auto zero function is terminated.	Check Power Meter status output per Read Byte Subroutine starting at line 2500. **NOTE** *Status output is generated by buffering HOR and HUR outputs of over/under range decoder. and YM3 output of mode select logic. For a description of circuit operation for this test, refer to Service Sheet 3, Mode Selection and Linear Under-Range Registration.*
7	**Error** – Power Meter status output does not indicate measured value valid. **Description** - For this test, the Power Meter was programmed to the Watt Mode, and a measurement was triggered. 10 seconds were allowed for the auto zero loop to clear, then the Power Meter was addressed to talk and the output status character was checked. Since range 1 was previously programmed, the Power Meter should output status character P, indicating that a valid measurement was taken. (For Watt Mode, range 1, an UNDER RANGE indication is not generated during the Under-Range Subroutine.)	GO TO line 640 and use STEP key to execute program line-by-line. Check that the following indications are obtained: **a. Line 640** 1) Auto zero enable logic is reset. 2) Mode enable logic outputs Watt mode. **b. Line 660-** Power Meter outputs correct status. Status output can be verified per Read Byte Subroutine starting at line 5000. **NOTE** *Status output is generated by buffering HOR and HUR outputs of over/under range decoder and YM3 output of mode select logic. For a description of circuit operation for this test, refer to Service Sheet 3, Mode Selection and Linear Under-Range Registration.*

Table 8-4. HP-IB Circuit Troubleshooting (7 of 18)

Error No.	Problem and Description	Corrective Action
8	**Error –** Power Meter does not hold 0 after being auto zeroed five consecutive times. **Description –** For the previous test, the Power Meter was programmed to the Watt Mode, thereby clearing the auto zero loop. For this test the Power Meter data output is checked to ensure that the Power Meter remains zeroed while configured for Watt Mode Operation.	Check Power Meter data output per Read Byte Subroutine starting at line 5000. (Data output should correspond to front-panel digital readout which was previously verified for local operation.)
9	**Error –** Power Meter range or mode output character wrong. **Description –** Power Meter programmed to Watt Mode, range 1, trigger with settling time. Then Power Meter addressed to talk and range and mode output characters checked.	A. Turn Power Meter on and off, then manually program Power Meter to Watt Mode, Range 1, trigger with settling time. (CMD "?U-","A1T"). B. Verify Power Meter Mode and Range character output per Read Byte Subroutine starting at line 5000. C. Check that 1) Mode select logic outputs Watt Mode. 2) Range Select Logic outputs range 1. 3) Range Counter is preset to range 1 during Remote Initialize Subroutine.
10	**Error –** Power Meter range or mode output character wrong. **Description –** Power Meter programmed to Watt Mode, range 2, trigger with settling time. Then Power Meter addressed to talk and range and mode output characters checked.	A Turn Power Meter on and off, then manually program Power Meter to Watt Mode, range 2, trigger with settling time (CMD "?U-" "A2T"). B. Verify Power Meter mode and range character output per Read Byte Subroutines starting at line 5000. C. Check that: 1) Mode select logic outputs Watt Mode. 2) Range select logic outputs range 2. 3) Range counter is preset to range 2 during Remote Initialize Subroutine.
11	**Error -** Power Meter range or mode output character wrong. **Description -** Power Meter programmed to Watt Mode, range 3, trigger with settling time. Then Power Meter addressed to talk and range and mode output characters checked.	A. Manually program Power Meter to Watt Mode, range 3, trigger with settling time (CMD "?U-", "A3T"). B. Verify Power Meter mode and range character output per Read Byte Subroutine starting at line 5000. C. Check that: 1) Mode select logic outputs Watt Mode. 2) Range select logic outputs range 3. 3) Range counter is preset to range 3 during Remote Initialize Subroutine. 4) Operating program branches from address 030_8 to address 056_8 (Remote Initialize Subroutine to Auto Zero Subroutine).

Table 8-4. HP-IB Circuit Troubleshooting (8 of 18)

Error No.	Problem and Description	Corrective Action
12	Error - Power Meter range or mode output character wrong. Description - Power Meter programmed to watt mode, range 4, trigger with settling time. Then Power Meter addressed to talk and range and mode output characters checked.	A. Manually program Power Meter to Watt Mode, range 4, trigger with settling time (CMD "?U-" , "A4T"). B. Verify Power Meter mode and range character output per Read Byte Subroutine starting at line 5000. C. Check that: 1) Mode select logic outputs Watt Mode. 2) Range select logic outputs range 4. 3) Range counter is preset to range 4 during Remote Initialize Subroutine. 4) The following display is obtained with the logic analyzer connected normally (refer to troubleshooting example) and set up for single sweep, TRIGGER WORD 012_8 (Remote Initialize Subroutine address). 10 001 010 1 — 10 001 110 5 10 001 011 2 — 00 101 110 6 00 001 100 3 — 00 101 111 7 10 001 101 4 — 00 101 111 8
13	**Error** - Power Meter range or mode output character wrong. **Description** - Power Meter programmed to Watt Mode, range 5, trigger with settling time. Then Power Meter addressed to talk and range and mode output characters checked.	A. Turn power on and off to Power Meter. Then manually program Power Meter to Watt Mode, range 5, trigger with settling time (CMD "? U—" , "A5T"). B. Verify Power Meter mode and range character output per Read Byte Subroutine starting at line 5000. C. Check that: 1) Mode select logic outputs Watt Mode. 2) Range select logic outputs range 5. 3) Range counter is preset to range 5 during Remote Initialize Subroutine.
14	**Error** - Power Meter range or mode output character wrong. **Description** - Power Meter programmed to Watt Mode, auto range, trigger with settling time. Then Power Meter addressed to talk and range and mode output characters checked.	A. Turn power on and off to Power Meter. Then manually program Power Meter to Watt Mode, auto range, trigger with settling time (CMD "? U-" , "A9T"). B. Verify Power Meter mode and range character output per Read Byte Subroutine starting at line 5000. C. Check that: 1) Mode select logic outputs Watt Mode. 2) Range select logic sets NAUTO output true. 3) Operating program branches from Remote Initialize Subroutine to Auto Zero Subroutine (Address 012_8 Q=1 not previously verified). 4) Range counter is counted down to range 1 during Power Meter operating program cycle.

Table 8-4. HP-IB Circuit Troubleshooting (9 of 18)

Error No.	Problem and Description	Corrective Action
15	**Error –** Power Meter range or mode output character wrong. **Description -** Power Meter programmed to dB (Rel) mode, range 1, trigger with settling time. Then Power Meter addressed to talk and range and mode output characters checked.	A. Manually program Power Meter to dB (REL) mode, range 1, trigger with settling time (CMD "?U-" ,"BIT"). B. Verify Power Meter mode and range character output per Read Byte Subroutine starting at line 2500. C. Check that: 1) Mode select logic outputs dB [REF] mode and resets NAUTO output. 2) Range select logic outputs range 1. 3) Range counter is preset to range 1 and output of mode select logic is loaded into mode register during Remote Initialize Subroutine.
16	**Error -** Power Meter range or mode output character checked. **Description –** Power Meter programmed to dB (REL) mode, range 2, trigger with settling time. Then Power Meter addressed to talk and range and mode output characters checked.	A. Manually program Power Meter to dB (REL) mode, range 2, trigger with settling time (CMD "?U-", "B2T"). B. Verify Power Meter mode and range character output per Read Byte Subroutine starting at line 5000. C. Check that: 1) Mode select logic outputs dB (REL) mode. 2) Range select logic outputs range 2. 3) Range counter is preset to range 2 during Remote Initialize Subroutine.
17	**Error -** Power Meter range or mode output character wrong. **Description –** Power Meter programmed to dB (REL) mode, range 3, trigger with settling time. Then Power Meter addressed to talk and range and mode output characters checked.	A. Manually program Power Meter to dB (REL) mode, range 3, trigger with settling time (CMD "?U-" , "B3T"). B. Verify Power Meter mode and range character output per Read Byte Subroutine starting at line 5000. C. Check that: 1) Mode select logic outputs dB (REL) mode. 2) Range select logic outputs range 3. 3) Range counter is preset to range 3 during Remote Initialize Subroutine.
18	**Error -** Power Meter range or mode output character wrong. **Description -** Power Meter programmed to dB (REL) mode, range 4, trigger with settling time. Then Power Meter addressed to talk and range and mode output characters checked.	A. Manually program Power Meter to dB (REL) mode, range 4, trigger with settling time (CMD "?U-" , "B4T"). B. Verify Power Meter mode and range character output per Read Byte Subroutine starting at line 5000. C. Check that: 1) Mode select logic output dB (REL) mode. 2) Range select logic output range 4. 3) Range counter is preset to range 4 and output of mode select logic is loaded into mode register during Remote Initialize Subroutine.

Table 8-4. HP-IB Circuit Troubleshooting (10 of 18)

Error No.	Problem end Description	Corrective Action
19	**Error** - Power Meter range or mode output character wrong. **Description** - Power Meter programmed to dB (REL) mode, range 5, trigger with settling time. Then Power Meter addressed to talk and range and mode output characters checked.	A. Manually program Power Meter to dB (REL) mode, range 5, trigger with settling time (CMD "?U-", "B5T"). B. Verify Power Meter mode and range character output per Read Byte Subroutine starting at line 5000. C. Check that: 1) Mode select logic output dB (REL) mode. 2) Range select logic output range 5. 3) Range counter is preset to range 5 during Remote Initialize Subroutine.
20	**Error** - Power Meter range or mode output character wrong. **Description** - Power Meter programmed to dB (REL) mode, auto range, trigger with settling time. Then Power Meter addressed to talk and range and mode output characters checked.	A. Manually program Power Meter to dB (REL) mode, auto range, trigger with settling time (CMD "?U-", "B9T"). B. Verify Power Meter mode and range character output per Read Byte Subroutine starting at line 5000. C. Check that: 1) Mode select logic outputs dB (REL) mode. 2) Range select logic sets NAUTO output true. 3) Range counter is counted down to range 1 during Power Meter operating program cycle.
21	**Error** - Power Meter range or mode output character wrong. **Description** - Power Meter programmed to dB [REF] mode, range 1, trigger with settling time. Then Power Meter addressed to talk and range and mode output characters checked.	A. Manually program Power Meter to dB [REF] mode, range 1, trigger with settling time (CMD "?U-", "C1T"). B. Verify Power Meter mode and range character output per Read Byte Subroutine starting at line 5000. C. Check that: 1) Mode select logic outputs dB [REF] mode. 2) Range select logic outputs range 1 and resets NAUTO output. 3) Range counter is preset to range 1 and output of mode select logic is loaded into mode register during Remote Initialize Subroutine.
22	**Error** - Power Meter range or mode output character wrong. **Description** - Power Meter programmed to dB [REF] mode, range 2, trigger with settling time. Then Power Meter addressed to talk and range and mode output characters checked.	A. Manually program Power Meter to dB [REF] mode, range 2, trigger with settling time (CMD "?U-", "C2T"). B. Verify Power Meter mode and range character output per Read Byte Subroutine starting at line 5000. C. Check that: 1) Mode select logic outputs dB [REF] mode. 2) Range select logic outputs range 2. 3) Range counter is preset to range 2 during Remote Initialize Subroutine.

Table 8-4. HP-IB Circuit Troubleshooting (11 of 18)

Error No.	Problem and Description	Corrective Action
23	**Error -** Power Meter range or mode output character wrong. **Description -** Power Meter programmed to dB [REF] mode, range 3, trigger with settling time. Then Power Meter addressed to talk and range end mode output characters checked.	A. Manually program Power Meter to dB [REF] mode, range 3, trigger with settling time (CMD "?U-", "C3T"). B. Verify Power Meter mode and range character output per Read Byte Subroutine starting at line 5000. C. Check that: 1) Mode select logic outputa dB [REF] mode. 2) Range select logic outputs range 3. 3) Range counter is preset to range 3 during Remote Initialize Subroutine.
24	**Error -** Power Meter range or mode output character wrong. **Description -** Power Meter programmed to dB [REF] mode, range 4, trigger with settling time. Then Power Meter addressed to talk and range and mode output characters checked.	A. Manually program Power meter to dB [REF] mode, range 4, trigger with settling time (CMD "?U-", "C4T"). B. Verify Power Meter mode and range character output per Read Byte Subroutine starting at line 5000. C. Check that: 1) Mode select logic outputs dB [REF] mode. 2) Range select logic outputa range 4. 3) Range counter is preset to range 4 during Remote Initialize Subroutine.
25	**Error –** Power Meter range or mode output character wrong. **Description –** Power Meter programmed to dB [REF] mode, range 5, trigger with settling time. Then Power Meter addressed to talk and range and mode output characters checked.	A. Manually program Power Meter to dB [REF] mode, range 5, trigger with settling time (CMD "?U-", "C5T"). B. Verify Power Meter mode and range character output per Read Byte Subroutine starting at line 5000. C. Check that: 1) Mode select logic outputs dB [REF] mode. 2) Range select logic outputs range 5. 3) Range counter is preset to range 5 during Remote Initialize Subroutine.
26	**Error -** Power Meter range or mode output characters wrong. **Description -** Power Meter programmed to dB [REF] mode, auto range, trigger with settling time. Then Power Meter addressed to talk and range end mode output characters checked.	A. Manually program Power Meter to dB [REF] mode, auto range, trigger with settling time (CMD "?U-", "C9T"). B. Verify Power Meter mode and range character output per Read Byte Subroutine starting at line 5000. C. Check that: 1) Mode select logic outputs dB (REL) mode. 2) Range select logic sets NAUTO output true. 3) Range counter is counted down to range 1 during Power Meter operating program cycle.

Table 8-4. HP-IB Circuit Troubleshooting (12 of 18)

Error No.	Problem and Description	Corrective Action
27	**Error -** Power Meter range, mode, or data output wrong. **Description -** Power Meter programmed to dBm mode, range 1, trigger with settling time. Then Power Meter addressed to talk and range, mode, and data output checked. (Data output corresponds to minimum threshold of dBm range 1, –30 dBm).	A. Manaully program Power Meter to dBm mode, range 1, trigger with settling time (CMD "?U-", "D1T"). B. Verify Power Meter mode, range and data character output per Read Byte Subroutine starting at line 5000. (Data output should correspond to indication on Digital Readout previously verified for local operation.) C. Check that: 1) Mode select logic outputs dBm mode. 2) Range select logic outputs range 1 and resets NAUTO output. 3) Range counter is preset to range 1 during Remote Initialize Subroutine.
28	**Error -** Power Meter range, mode, or data output wrong. **Description -** Power Meter programmed to dBm mode, range 2, trigger with settling time. Then Power Meter addressed to talk and range mode and data output checked. (Data output should correspond to minimum threshold of dBm range 2, –20 dBm.)	A. Manually program Power Meter to dBm mode, range 2, trigger with settling time (CMD "?U-", "D2T"). B. Verify Power Meter mode data and range character output per Read Byte Subroutine starting at line 5000. (Data output should correspond to indication on Digital Readout previously verified for local operation.) C. Check that: 1) Mode select logic outputs dBm mode. 2) Range select logic outputs range 2. 3) Range counter is preset to range 2 during Remote Initialize Subroutine.
29	**Error -** Power Meter range, mode, or data output wrong. **Description -** Power Meter programmed to dBm mode, range 3, trigger with settling time. Then Power Meter addressed to talk and range mode and data output checked. (Data output should correspond to minimum threshold of dBm range 3, –10 dBm.)	A. Manually program Power Meter to dBm mode, range 3, trigger with settling time (CMD "?U-", "D3T"). B. Verify Power Meter mode, data, and range character output per Read Byte Subroutine starting at line 5000. (Data output should correspond to indication on Digital Readout previously verified for local operation.) C. Check that: 1) Mode select logic outputs dBm mode. 2) Range select logic outputs range 3. 3) Range counter is preset to range 3 during Remote Initialize Subroutine.

Table 8-4. HP-IB Circuit Troubleshooting (13 of 18)

Error No.	Problem and Description	Corrective Action
30	**Error –** Power Meter range or mode output character wrong. **Description -** Power Meter programmed to dBm mode, range 4, trigger with settling time. Then Power Meter addressed to talk and range, mode, and data output checked. (Data output should correspond to minimum threshold of dBm range 4, 0 dBm.)	A. Manually program Power Meter to dBm mode, range 4, triggered with settling time (CMD "?U-", "D4T"). B. Verify Power Meter mode data, and range character output per Read Byte Subroutine starting at line 5000. (Data output should correspond to indication on Digital Readout previously verified for local operation.) C. Check that: 1) Mode select logic outputs dBm mode. 2) Range select logic outputs range 4. 3) Range counter is preset to range 4 during Remote Initialize Subroutine.
31	**Error -** Power Meter range, mode, or data output wrong. **Description -** Power Meter programmed to dBm mode, range 5, trigger with settling time. Then Power Meter addressed to talk and range, mode, and data output checked. (Data output should correspond to minimum threshold of dBm range 5, 10 dBm.)	A. Manually program Power Meter to dBm mode, range 5, trigger with settling time (CMD "?U-", "D5T"). B. Verify Power Meter mode, data, and range character output per Read Byte Subroutine starting at line 5000. (Data output should correspond to indication on Digital Readout previously verified for local operation.) C. Check that: 1) Mode select logic outputs dBm mode. 2) Range select logic outputs range 5. 3) Range counter is preset to range 5 during Remote Initialize Subroutine:
32	**Error -** Power Meter range, mode, or data output wrong. **Description –** Power Meter programmed to dBm mode, auto range, trigger with settling time. Then Power Meter addressed to talk and range, mode, and data output checked. (Data output should correspond to minimum threshold of dBm range 1, –30 dBm.)	A. Manually program Power Meter to dB [REF] mode, auto range, trigger with settling time (CMD "?U-, "D9T"). B. Verify Power Meter mode, range, and data character output per Read Byte Subroutine starting at line 5000. (Data character output should correspond to indication on Digital Readout previously verified for local operation.) C. Check that: 1) Mode select logic outputs dBm mode. 2) Range select logic sets NAUTO output true. 3) Range counter is counted down to range 1 during Power Meter operating program cycle.

Table 8-4. HP-lB Circuit Troubleshooting (14 of 18)

Error No.	Problem and Description	Corrective Action
33	**Error** - Power Meter does not respond properly to device clear. **Description** - The Power Meter is first programmed to range 5, dBm mode, free run at maximum rate. Then a device clear is sent to the Power Meter to select Watt mode, auto range, hold operation. Following the device clear, a measurement is triggered, the Power Meter is addressed to talk, and the Power Meter status, range, and mode outputa are checked to verify proper response to the device clear.	Turn power on and off to Power Meter. Then GO TO line 1040 and use STEP key to manually execute program line-by-line. Check that the following indications are observed. **a. Line 1050** – 1) Power Meter configured for remote operation. 2) The following display is observed with logic analyzer connetted normally (refer to troubleshooting example) and set up for single sweep, TRIGGER WORD 012_8 10 001 010 1 11 000 001 5 10 001 011 2 01 000 011 6 00 001 100 3 01 000 011 7 00 001 101 4 01 000 011 8 3) dBm output of mode select logic is loaded into mode register. **b. Line 1060/2430** – 1) Device clear decoder (Service Sheet 11) generates LPU output in response to device clear command. 2) Mode select logic outputs Watt mode in response to LPU input. 3) Range select logic seta auto range qualifier true in response to LPU input. 4) Measurement rate select logic sets H HOLD output true in response to LPU input. 5) Operating program initialized to starting address 000_8 by LPU signal. Program then cycles to Local/Remote Branch Subroutine hold loop (026_8, 042_8, 043_8) when LPU signal is terminated. (During Power Up Subroutine, watt mode output of mode select logic is loaded into mode register.) **c. Line 1070** — Measurement triggered and operating program cycles to hold loop in Display and Remote Talk Subroutine. During program cycle, range counter is counted down to range 1. **d. Line 1080/2380** - Power Meter outputs correct status, mode, and range characters. Power Meter output can be verified per Read Byte Subroutine starting at line 5000.
34	**Error** - Power Meter incorrectly decodes address data as device clear. **Description** - The Power Meter is programmed to the dBm mode and a measurement is triggered to load the mode select registers. Then a number of ASCII characters are sent to the Power Meter to ensure that it will not erroneously decode these characters as a device clear command. After the last character is	GO TO line 1150 and use STEP key to manually execute test program line-by-line. Check LPU output of device clear decoder (Service Sheet 11) for each ASCII character sent.

Table 8-4. HP-IB Circuit Troubleshooting (15 of 18)

Error No.	Problem and Description	Corrective Action
34 (cont)	sent, the Power Meter is programmed to trigger immediate, talk and the mode output is checked to ensure that the Power Meter is still operating in the dBm mode.	
35	**Error -** Power Meter doesn't go into hold after receiving device clear. **Description -** A device clear is sent to the Power Meter to select watt mode, auto range operation. Then a 200 ms delay is provided after which the Power Meter is programmed to the dBm mode, range 3, trigger immediate. Following these programming commands, a talk cycle is enabled and the calculator checks Power Meter output status, range, and mode data. The purpose of this test is to verify that the device clear command causes the Power Meter to enter a hold condition while awaiting a trigger command. If the device clear doesn't cause the Power Meter to enter the hold loop, the talk cycle will be enabled before the programming commands are loaded into the mode register and range counter. Thus the Power Meter will output the mode, range, end status selected by the preceding device clear command.	Turn power on and off to Power Meter. Then send the following programming command to configure the Power Meter for remote operation CMD "?U-". After the Power Meter is configured for remote operation, GO TO line 1300 and use STEP key to manually execute program line-by-line. Check that the following indications are observed: **a. Line 1300/2430 -** Operating program is initialized to starting address 000_8 by LPU output of device clear decoder. Operating program then cycles to Local/Remote Branch Subroutine hold loop when LPU signal is terminated. **b. Line 1330-** H HOLD output of measurement rate select logic is set false by trigger immediate programming command and operating program cycles to Display and Remote Talk Subroutine hold loop. **c. Line 1340/2380 -** Power Meter outputs connect status, range and mode characters. Power Meter output can be verified per Read Byte Subroutine starting at line 5000.
36	**Error –** Power Meter responds to invalid listen address. **Description –** The Power Meter is programmed to the watt mode, and a measurement is triggered to load the mode select registers. Then a Power Meter talk cycle is enabled to unaddress the Power Meter to listen. After the talk cycle, false listen addresses are sent to the Power Meter followed by a dBm mode programming command. If the Power Meter is functioning properly it will not respond to the dBm mode programming command because it should not be addressed to listen. Thus, it should output mode character A, thereby indicating that it is operating in the watt mode.	GO TO line 1410 and use STEP key to manually execute program line-by-line. Check that Power Meter is unaddressed to listen in line 1430 and is not addressed to listen in line 1440 (H LSTN test point A11TP4 remains low). If Power Meter is addressed to listen in line 1440 use the following program to isolate the malfunction: CMD "?MS" – (H LSTN test point goes low) CMD "?U-" – (H LSTN test point goes high) CMD "?MS" – (H LSTN test point goes low) CMD "?U%" – (H LSTN test point remains low) CMD "?U)" – (H LSTN test point remains low) CMD "?U," – (H LSTN test point remains low) CMD "?U- =" – (H LSTN test point remains low) CMD "?U/" – (H LSTN test point remains low) **NOTE** *Address 102_8Q = 0 of Remote Initialize Subroutine has not been previously verified. To verify this address, turn power on and off to Power Meter, set front-panel MODE switch to dBm, then manually program Power Meter to remote mode and then to watt mode, range 3, trigger immediate (CMD "?U-") (CMD "?U-", "A3I") and check that the following indications are obtained.*

Table 8-4. HP-IB Circuit Troubleshooting (16 of 18)

Error No.	Problem and Description	Corrective Action
36 (cont)		1) The following display is obtained with the logic analyzer connected normally (refer to troubleshooting example) and set up for single sweep, TRIGGER WORD 012_8 (Remote Initialize Subroutine address). 10 001 010 1 11 000 010 5 00 001 011 2 01 000 100 6 00 001 101 3 01 000 100 7 01 000 001 4 01 000 100 8 2) The watt mode output of the mode select logic is loaded into the mode register during the Remote Initialize Subroutine.
37	**Error -** Power Meter takes trigger immediate measurement when programmed to trigger with settling time. **Description -** The Power Meter is first programmed to watt mode, range 2, trigger immediate, then a talk cycle is enabled to cause the Power Meter to enter the Remote Initialize Subroutine hold loop. Following the talk cycle a trigger with settling time programming command is sent to the Power Meter and the calculator checks I/O status after a 200 ms delay. Since the Power Meter is programmed to range 2, access time to the first date character is approximately 1130 ms. Thus, the calculator should detect STAT 13 = 2.	GO TO line 1530 and use STEP key to manually execute program line-by-line. Check that the following indications are obtained: **a. Line 1530-** 1) L HOLD output of measurement rate select logic is set false by trigger immediate programming command. 2) Operating program branches from Local/Remote Branch Subroutine Hold Loop to Remote Initialize Subroutine. 3) The following display is observed with the logic analyzer connected normally (refer to troubleshooting example) and set up for single sweep, TRIGGER WORD 012_8 (Remote Initialize Subroutine Address). 10 001 010 1 11 000 010 5 00 001 011 2 01 000 100 6 00 001 101 3 01 000 100 7 01 000 001 4 01 000 100 8 **b. Line 1550 -** The following display is observed with the logic analyzer connected normally (refer to troubleshooting example) and set up for single sweep, TRIGGER WORD 012_8 (Remote Initialize Subroutine Address). 10 001 010 1 10 001 111 5 00 001 011 2 00 011 000 6 10 001 101 3 10 011 110 7 00 001 110 4 01 010 111 8
38	**Error –** Power Meter takes trigger with settling time measurement when programmed to trigger immediate. **Description -** A talk cycle is first enabled to complete the output date transfer initiated for the previous test. Then a trigger immediate programming command is sent to the Power Meter to initiate the next talk cycle and the calculator checks I/O status after a 200 ms delay. Since the Power Meter is programmed to the Watt Mode, worst case access time to the first output data character is 70 ms. Thus, the calculator should detect STAT 13 = 3.	GO TO line 1610 and use STEP key to manually execute program line-by-line. Check that the following display is obtained with the logic analyzer connected normally and set up for single sweep, TRIGGER WORD 012_8 (Remote Initialize Subroutine Address). 10 001 010 1 11 000 010 5 00 001 011 2 01 000 100 6 00 001 101 3 01 000 100 7 01 000 001 4 01 000 100 8

Table 8-4. HP-IB Circuit Troubleshooting (17 of 18)

Error No.	Problem and Description	Corrective Action
39	**Error -** Power Meter data output wrong when CAL ADJ control is adjusted to obtain .799 mW indication on front-panel Digital Readout. **Description –** The test number is set to 1 and the Power Meter is programmed to range 3, free run at maximum rate. CAL FACTOR % switch disabled (100%). Then the Power Meter is addressed to talk and the output data is checked after each talk cycle. If the output data does not indicate .799 mW within 300 talk cycles, an error is detected.	**NOTE** *Operating program execution and circuit operation previously verified per local checkout procedure except as indicated below.* Check Power Meter data output per Read Byte Subroutine starting at line 5000.
40	**Error –** Power Meter data output wrong when CAL ADJ control is adjusted to obtain .866 mW indication on front-panel Digital Readout. **Description -** The test number is set to 1 and the Power Meter continues to free run at the maximum rate on watt mode range 3. Since the Power Meter is still addressed to talk, it outputs data during each talk cycle and the calculator checks to see if the data indicates .866 mW. If the output data does not indicate .866 mW within 300 talk cycles, an error is detected.	**NOTE** *Operating program execution and circuit operation previously verified per local checkout procedure except as indicated below.* Check Power Meter data output per Read Byte Subroutine starting at line 5000.
41	**Error –** Device clear command does not disable CAL FACTOR % switch. **Description -** The verification program halts and the CAL ADJ control is adjusted to obtain a 1.000 mW indication on the front panel digital readout (Power Meter is free running per previous programming commands.) Then the verification program is manually restarted and a cal factor enable programming command is sent to the Power Meter followed by a device clear command. After the programming commands are sent, a talk cycle is enabled and the calculator checks the data output to ensure that the device clear command disabled the CAL FACTOR 70 switch.	Program Power Meter to free run (CMD "?U-", "R"). Then GO TO line 2000 and use STEP key to manually exercise program line-by-line. Check that the following indications are obtained: **a. Line 2000 –** Cal Factor Disable Logic sets Cal Factor Disable output false (front-panel digital readout indication changes from 1.00 mW to 1.17 ± 0.01 mW). **b. Line 201 0/2430 -** Cal Factor Disable Logic sets Cal Factor Disable output true in response to LPU output of device clear generator. (Device clear places operating program in hold loop; since measurement is not triggered, display does not change.) **c. Line 2030-** Measurement is triggered and front-panel digital readout indication changes to 1.00 mW). **d. 2040/2390 –** Power Meter outputs correct data characters. Power Meter data output can be verified per Read Byte Subroutine starting at line 5000.

Table 8-4. HP-IB Circuit Troubleshooting (18 of 18)

Error No.	Problem and Description	Corrective Action
42	**Error -** Power Meter does not provide under range, watt mode status output. **Description –** The Power Meter is programmed to range 5, watt mode, and a measurement is triggered. Then a talk cycle is enabled and the calculator checks the Power Meter status output. Since a 1 mW RF level is applied to the Power Sensor, the status output should indicate under range, watt mode.	Manually program Power Meter CMD "?U-", "A5R". Check Power Meter status output per Read Byte Subroutine starting at line 5000. **NOTE** *Power Meter status output is generated by buffering HOR and HUR outputs of over/under range decoder and YM3 output of mode select logic. For a description of circuit operation for this test, refer to Service Sheet 3, Block Diagram Description, Mode Selection and Linear Under Range Registration.*
43	**Error –** Power Meter does not provide under range log mode status output. **Description -** The Power Meter is programmed to range 5, dBm mode and a measurement is triggered. Then a talk cycle is enabled and the calculator checks the Power Meter output status. Since a 1 mW RF level is applied to the Power Sensor, the status output should indicate under range, log mode.	Manually program Power Meter CMD "?U-", "D5R". Check Power Meter status output per Read Byte Subroutine starting at line 5000. **NOTE** *Power Meter status output **is** generated by buffering HOR and HUR outputs of over/under range decoder and YM3 output of mode select logic. For a description of circuit opem tion for this test, refer to Service Sheet 3, Block Diagram Description, Mode Selection and Log Under-Range Registration.*
44	**Error –** Power Meter does not provide over range status output. **Description -** The Power Meter is programmed to range 2, watt mode, and a measurement is triggered. Then a talk cycle is enabled and the calculator checks the Power Meter status output. Since a 1 mW RF level is applied to the Power Sensor, the status output should indicate an over range condition.	Manually program Power Meter CMD "?U-", "A2R". Check Power Meter status output per Read Byte Subroutine starting at line 5000: **NOTE** *Power Meter status output is genemted by buffering HOR and HUR outputs of over/under range decoder and YM3 output of mode select logic. For a description of circuit operation for this test, refer to Service Sheet 3, Block Diagram Description, Mode Selection and Linear Over-Range Registration.*
45	**Error -** Cal factor enable programming command does not enable CAL FACTOR % switch. **Description–** The Power Meter is programmed to watt mode, range 3, CAL FACTOR % switch enabled, trigger with settling time. Then a talk cycle is enabled and the calculator checks Power Meter data output. Since CAL FACTOR % switch is now enabled in the 85% position, the data output should be 1.176 ± 0.008 mW. (CAL ADJ control was previously adjusted to obtain a 1.000 mW indication with CAL FACTOR % switch disabled. Disabling the switch is the same as setting it to 100% when it is enabled.)	Manually program Power Meter CMD "?U-" , "+R". GO TO line 2200 and use STEP key to manually execute program line-by-line. Check that the following indications are obtained: **a. Line 2200 –** Cal Factor Disable output of Cal Factor Disable logic is set false by programming command (front-panel Digital Readout indication changes from 1.000 mW to 1.176 mW). **b. Line 2220/2380 -** Power Meter outputs correct data character. Power Meter data character output can be verified per Read Byte Subroutine starting at line 5000.

8-68. BCD Instrument Checkout

8-69. A procedure for checking the operation of a BCD equipped Power Meter is provided in Table 8-5. The procedure is structured identically to the standard instrument checkout procedure described previously. For additional information covering BCD circuit operation and program interfacing, refer to Service Sheets 3 and 5.

NOTE

Since a number of operating program addresses could not be verified for local operation, it is possible that an address malfunction could inhibit execution of the program. If this occurs it can be verified using the logic analyzer in the free run mode. To isolate this type of problem, it is necessary to turn power on and off to the Power Meter, then to reprogram the Power Meter to the failed condition while using the logic analyzer to verify program execution starting at the Local/Remote Branch Subroutine (see Figure 8-15).

Table 8-5. BCD Interface Option 024 Checkout (1 of 6)

Step	Instrument Setup and Test Procedure	Test Description and Key Operating Sequence
1	Connect Range Calibrator to Power Meter and turn power on to both units. Set Range Calibrator FUNCTION switch to STAND-BY and program Power Meter for remote free-run operation , range 0. Check that the following front-panel indications are observed: a. REMOTE indicator is lit. b. Digital Readout is blanked. c. Either OVER RANGE or UNDER RANGE indicator is lit.	**Description -** This step verifies that the mode select gates provide a remote enable (LREM) output when the remote enable input is true, and that the range select gates provide a master reset (LPU) output when the Power Meter is programmed to remote range 0. **Key Operating Sequence -** a. Mode select gates provide low remote enable (LREM) output. b. Range select gates provide low master reset (LPU) output. c. Master reset output of range select gates holds operating program at starting address 000_8 (refer to Service Sheet 3, Block Diagram Description, Program Initialization).
2	Set Power Meter MODE dBm and RANGE HOLD switches to on (in). Then program Power Meter for local operation and check that the Power Meter outputs the following data: Status – 3 (Under range log) Range – 5 Mode – 03 (dBm)* or blank (printer) Sign – 0 (+) Data – same as front-panel digital readout (while PRINT signal is low) Exponent – 02 **NOTE** *Operating program will hang up in Display and Remote Talk Subroutine data transfer pause loop (addresses 110_8, 106_8) is inhibit input is true while Power Meter is programmed for local operation.*	**Description –** This step verifies that the Power Meter outputs a data message each time that it enters the Display and Remote Talk Subroutine while free running in the local mode. **Key Operating Sequence -** a. Remote enable (LREM) and master reset (CPU) outputs of mode and range select gates go high when Power Meter programmed for local operation. b. Operating program cycles to Display and Remote Talk Subroutine. c. The following display is observed with the logic analyzer corrected normally (refer to troubleshooting example) and setup for single sweep, TRIGGER WORD 177_8 (Display and Remote Talk Subroutine Address). 11 111 111 1 — 01 001 000 7 010 010 010 2 — 11 001 001 8 00 010 011 3 — 01 001 010 9 00 100 100 4 — 10 010 110 10 10 100 101 5 10 100 110 6

Table 8-5. BCD Interface Option 024 Checkout (2 of 6)

Step	Instrument Setup and Test Procedure	Test Description and Key Operating Sequence
3	Program Power Meter for remote operation, watt mode, range 1, trigger with settling time. Then trigger a second measurement and check that the Power Meter outputs the following data: Status – 0 (In Range) Range – 1 Mode – 2 (Watt) or Ω (printer) Sign – 1 or 0 (+ or –) Data – Same as front-panel digital readout. Exponent – 08	Description - This test verifies that the Power Meter is capable remote, watt mode, range 1 operation, and that the operating program enters the Display and Remote Talk Subroutine data transfer pause loop after outputting data when programmed for triggered operation. Key Operating Sequence - Program execution and circuit operation previously verified except as indicated below: a. Mode select gates provide low remote enable (LREM) output along with Watt mode output. b. Range select gates provide range 1 output. c. DACQ qualifier of measurement control circuit is set low by first trigger with settling time programming command, then reset by HCLD instruction generated in Display and Remote Talk Subroutine. d. Operating program enters Display and Remote Talk Subroutine BCD hold loop (106_8, 110_8). e. DACQ qualifier of measurement control circuit is set low by second trigger with settling time programming command, and the following display is observed with the logic analyzer connected normally (refer to troubleshooting example) and set up for single sweep, TRIGGER WORD 110_8 Q = 0 (Display and Remote Talk Subroutine address. 01 001 000 1 — 00 001 110 9 11 001 001 2 — 00 001 111 10 01 001 010 3 — 10 011 001 11 00 010 110 4 — 10 011 110 12 10 100 010 5 — 01 010 111 13 10 001 010 6 — 01 010 111 14 00 001 011 7 — 01 010 111 15 10 001 101 8 — 01 010 111 16 f. Watt mode output of mode select gates is loaded into mode select logic. g. Operating program cycles to Display and Remote Talk Subroutine data transfer pause loop. **NOTE** *Address 120_8 Q=1, 123_8, and 122_8 of Delay Subroutine not previously verified.*
4	Program Power Meter for remote operation, Watt mode, range 2, trigger with settling time. Check that the Power Meter outputs the following data: Status – 1 (Under range, watt) Range – 2 Mode – 2 (watt) or Ω (printer) Sign – 1 or 0 (+ or –) Data – same as front-panel Digital Readout Exponent – 07	**Description**- This test verifies that the Power Meter is capable of remote, watt mode, range 2 operation. **Key Operating Sequence** - Program execution and circuit operation previously verified except as indicated below: a. Range select gates provide range 2 output. continued. . .

Table 8-5. BCD Interface Option 024 Checkout (3 of 6)

Step	Instrument Setup and Test Procedure	Test Description and Key Operating Sequence
4 (cont)		b. The following display is obtained with the logic analyzer connetted normally (refer to troubleshooting example) and set up for single sweep, TRIGGER WORD 012_8 (Remote Initialize Subroutine Address). 10 001 010 1 10 001 111 5 00 001 011 2 00 011 000 6 10 001 101 3 10 011 110 7 00 001 110 4 01 010 111 8
5	Program Power Meter for remote operation, Watt mode, range 3, trigger with settling time. Check that the Power Meter outputs the following data: Status – 1 (under range, watt) Range – 3 Mode – 2 (watt) or Ω (printer) Sign -1 or 0 (+or-) Data – same as front-panel Digital Readout Exponent – 06	**Description** - This test verifies that the Power Meter is capable of remote, Watt mode, range 3 operation. **Key Operating Sequence** - Program execution and circuit operation previously verified except as indicated below: a. Range select gates provide range 3 output. b. The following display is obtained with the logic analyzer connetted normally (refer to troubleshooting example) and set up for single sweep, TRIGGER WORD 012_8 (Remote Initialize Subroutine Address). 10 001 010 1 10 001 111 5 00 001 011 2 10 011 000 6 10 001 101 3 10 101 110 7 00 001 110 4 00 101 111 8
6	program Power Meter for remote operation, watt mode, range 4, trigger with settling time. Check that the Power Meter outputs the following data: Status – 1 (under range, watt) Range – 4 Mode – 2 (Watt) or Ω (printer) Sign -1 or 0 (+or-) Data – same as front-panel Digital Readout Exponent – 05	**Description** - This test verifies that the Power Meter is capable of remote, Watt mode, range 4 operation. **Key Operating Sequence** - Program execution and circuit operation previously verified except as indicated below: a. Range select gates provide range 4 output. b. The following display is obtained with the logic analyzer connetted normally (refer to troubleshooting example) and setup for single sweep, TRIGGER WORD 012_8 (Remote Initialize Subroutine Address). 10 001 010 1 10 001 110 5 10 001 011 2 10 101 110 6 00 001 100 3 10 101 111 7 10 001 101 4 10 101 111 8
7	Program Power Meter for remote operation, Watt mode, range 5, trigger with settling time. Check that the Power Meter outputs the following data: Status – 1 (under range, watt) Range – 5 Mode – 2 (watt) or Ω (printer) Sign -1 or 0 (+or-) Data – same as front-panel Digital Readout Exponent – 04	**Description** - This test verifies that the Power Meter is capable of remote, watt mode, range 5 operation. **Key Operating Sequence** - Program execution and circuit operation previously verified except as indicated below: a. Range select gates provide range 5 output. b. Range counter is preset to range 5 during Remote Initialize Subroutine.

Table 8-5. BCD Interface Option 024 Checkout (4 of 6)

Step	Instrument Setup and Test Procedure	Test Description and Key Operating Sequence
8	Program Power Meter for remote operation, Watt mode, auto range (6 or 7), trigger with settling time. Check that the Power Meter outputs the following data: Status – 0 (in range) Range – 1 Mode – 02 (watt) or Ω (printer) Sign – 1 or 0 (+ or –) Data – Same as front-panel Digital Readout Exponent – 08	**Description** - This test verifies that the Power Meter is capable of remote, watt mode, auto range operation. **Key Operating Sequence** - Program execution and circuit operation previously verified except for auto range enable output of range select gates and address 012_8 Q=0 of Remote Initialize Subroutine.
9	Program Power Meter for remote operation, dBm mode, range 3, trigger with settling time. Check that the Power Meter outputs the following data: Status – 3 (under range dBm mode) Range – 3 Mode — 03 (dBm) or * (printer — might be blank) Sign – 1 or 0 (+ or –) Data – same as front-panel Digital Readout Exponent – 02	**Description** - This test verifies that the Power Meter is capable of remote, dBm operation and that an LCKM instruction is generated for a range 3, trigger with settling time measurement. **Key Operating Sequence** - Program execution and circuit operation previously verified except as indicated below: a. Mode select gates provide dBm mode output. b. LCKM instruction is generated at address 017_8 of Remote Initialize Subroutine and dBm output of mode select gates is loaded into mode register.
10	Program Power Meter for remote operation, dB (REL) mode, range 4, trigger with settling time. Check that the Power Meter outputs the following data: Status – 3 (under range log mode) Range – 4 Mode – 01 (dB REL) or A (printer) Sign – 1 or 0 (+ or –) Date – Same as front-panel Digital Readout Exponent – 02	**Description** - This test verifies that the Power Meter is capable of remote dB (REL) operation and that an LCKM instruction is generated for a range 4 trigger with settling time measurement. **Key Operating Sequence** - Program execution and circuit operation previously verified except as indicated below: a. Mode select gates provide dB (REL) output. b. LCKM instruction is generated at address 017_8 of Remote Initialize Subroutine and dB (REL) output of mode select gate is loaded into mode register.
11	Program Power Meter for remote operation, dB [REF] mode, range 4, trigger immediate. Check that the Power Meter outputs the following data: Status – 3 (under range log mode) Range – 4 Mode – 00 (dB [REF] mode) or V (printer) Date – same as front-panel Digital Readout Exponent – 02	**Description** - This test verifies that the Power Meter is capable of remote dB [REF] trigger immediate operation. **Key Operating Sequence** - Program execution and circuit operation previously verified except as indicated below. a. Mode select gates provide dB [REF] mode output. b. The following display is observed with the logic analyzer connected normally (refer to troubleshooting example) and set up for single sweep, TRIGGER WORD 012_8 (Remote Initialize Subroutine address). 10 001 010 1 10 001 011 2 00 001 100 3 00 001 101 4 01 000 001 5 01 000 010 6 01 000 011 7 01 000 011 8

Table 8-5. BCD Interface Option 024 Checkout (5 of 6)

Step	Instrument Setup and Test Procedure	Test Description and Key Operating Sequence
11 (cont)		c. The dB [REF] mode output of the mode select gates is loaded into the mode select register at address 102_8 of the Remote Initialize Subroutine. d. The operating program branches from the Remote Initialize Subroutine to the Measurement Subroutine.
12	Program Power Meter for remote operation, dB (REL) mode, range 4, trigger immediate. Check that the Power Meter outputs the following data: Status – 3 (under range log) Range – 4 Mode – 01 (dB REL) or A (printer) Data – same as front-panel Digital Readout Exponent – 02	**Description -** This step verifies that the Power Meter is capable of remote, dB (REL) mode, trigger immediate operation. **Key Operating Sequence –** Program execution and circuit operation previously verified except as indicated below: a. The following display is observed with the logic analyzer connetted normally (refer to troubleshooting example) and set up for single sweep, TRIGGER WORD 012_8 (Remote Initialize Subroutine address): 10 001 010 1 11 000 001 5 10 001 011 2 01 000 011 6 00 001 100 3 01 000 011 7 00 001 101 4 01 000 011 8 b. The dB (REL) output of the mode select gates is loaded into the mode select register at address 101_8 of the Remote Initialize Subroutine.
13	Program the Power Meter for remote operation, Watt mode, range 4, trigger immediate. Check that the Power Meter outputs the following data: Status – 1 (under range, Watt mode) Range – 4 Mode – 02 (Watt) or Ω (printer) Date – same es front-panel Digital Readout Exponent – 02	**Description -** This step verifies that the Power Meter is capable of remote, Watt mode, trigger immediate operation. **Key Operating Sequence –** Program execution and circuit operation previously verified except as indicated below: a. The following display is observed with the logic analyzer connetted normally (refer to troubleshooting example) and set up for single sweep, TRIGGER WORD 012_8 (Remote Initialize Subroutine address): 10 001 010 1 01 000 001 5 10 001 011 2 11 000 010 6 00 001 100 3 01 000 100 7 00 001 101 4 01 000 100 8 b. The watts output of the mode select gates is loaded into the mode select register at address 102_8 of the Remote Initialize Subroutine.

Table 8-5. BCD Interface Option 024 Checkout (6 of 6)

Step	Instrument Setup and Test Procedure	Test Description and Key Operating Sequence
14	Program Power Meter for remote operation, Watt mode, auto range, trigger immediate. Check that the Power Meter outputs the following data: Status – 0 (in range) Range – 1 Mode – 2 (Watt) or Ω (printer) Data – same as front-panel Digital Readout Exponent – 08	**Description** - This step verifies that the operating program is capable of cycling through the Delay Subroutine remote fast branch. **Key Operating Sequence** - Program execution and circuit operation previously verified except for Delay Subroutine address branching. With the logic analyzer connected normally and set up for single sweep, TRIGGER WORD 006_8, the following display should be observed: 00 000 110 1 00 101 110 3 01 010 000 2 00 101 111 4 NOTE *Address 012_8, Q=0 of Remote Initialize Subroutine not previously verified.*
15	Program Power Meter for remote operation, dBm mode, range 1, trigger immediate. Then provide auto zero enable input and trigger second measurement. Check that the front-panel ZERO lamp remains lit for approximately 4 seconds and that the Power Meter outputs the following data after the second trigger is sent Status – 4 (Auto zeroing, in range) Range – 1 Mode – 2 (Watt) or Ω (printer) Data – same as front-panel Digital Readout Exponent – 08	**Description** – This step verifies that the Power Meter is configured to the Watt mode when remote auto zero operation is selected. **Key Operating Sequence** – Program execution and circuit operation previously verified except for YM3 output of mode select gates
16	Program Power Meter for remote, free-run, Watt mode, auto range operation. Then set up range calibrator to provide 1-milliwatt output. Adjust Power Meter CAL ADJ control to obtain 1.000 mW indication on front-panel Digital Readout, set CAL FACTOR % switch to 85 and program CAL FACTOR % switch to on, then off. Check that indication on front-panel Digital Readout changes from 1.000 mW to 1.176 ± 0.002 mW when CAL FACTOR % switch is enabled.	**Description** - This step verifies that the CAL FACTOR % switch can be enabled and disabled remotely. **Key Operating Sequence** - Program execution and circuit operation previously verified except for cal factor enable output of mode select gates.
17	Leave range calibrator set up as specified for the previous step and program Power Meter for remote, Watt mode, range 2, trigger with settling time operation. Check that the front-panel OVER RANGE indicator lights and that the Power Meter outputs status code 2 (over range).	**Description** - This step verifies that the Power Meter provides the correct status output for an over range condition. **Key Operating Sequence** - Program execution and circuit operation previously verified except for over/under range decoder operation. Refer to Service Sheet 3.

CIRCUIT DESCRIPTIONS

8-70. BLOCK DIAGRAM CIRCUIT DESCRIPTIONS

8-71. Service Sheet 1

8-72. The Model 436A is a digital readout Power Meter which can be operated locally via front-panel controls or remotely via an HP-IB Interface Bus (Option 022) or a BCD Interface (Option 024). The overall power range and frequency response of the Power Meter is determined by the Power Sensor to which it is connected.

8-73. When the Power Meter is operated locally, the Push-Button Switch Assembly enables selection of the measurement mode (dB, watts) and the auto-ranging circuits normally select the most sensitive range for measurement of input power. Should the operator desire to make all measurements on a specific range, however, a RANGE HOLD switch allows the Power Meter to be locked in any one of the five measurement ranges.

8-74. When the Power Meter is operated remotely, the front-panel controls are disabled, and measurement mode and range are selected by programming inputs from the remote interface. Remote operation can only be enabled via the remote interface; it cannot be enabled via the front panel.

8-75. As shown on Service Sheet 1, all of the Power Meter operating functions are enabled and/or sequenced by the outputs of the Controller. These outputs, in turn, are generated by processing the qualifier, mode, and range select inputs according to an operating program stored in a MOS memory chip. Thus, in order to understand the functions of the circuits shown on the block diagram, it is first necessary to consider their relationship to the operating program. An overall flow chart of the operating program is illustrated in Figure 8-15, Sheet 1. As shown in the figure, the operating program is divided into subroutines with each subroutine providing some dedicated function. When the Power Meter is first turned on, the operating program is preset to its power up address and the power up subroutine is executed to initialize the Power Meter circuits. After the power up subroutine is executed, the program cycles normally with one measurement being taken and the results displayed for each cycle. During each cycle, the circuits shown on the block diagram operate as described in the following paragraphs.

a. Power Sensor, Amplifier, Demodulator, Filter, and True-Range Decoder. The inputs to these circuits from the Controller are allowed to change only once during each program cycle. Thus, the circuits are, in effect, continuously enabled and provide constant outputs. The outputs of the Amplifier, Filter, and Demodulator Circuits are dc representations of the RF input power level applied to the Power Sensor. The outputs of the True-Range Decoder are reference values which account for the different sensitivities of the various types of Power Sensors that can be used with the Power Meter.

b. Counters, Clock Generator, and Analog-to-Digital Converter. The Clock Generator provides program clock outputs which enable sequencing of the operating program and counting of the Up/Down Counters. The Counters are enabled by the Controller to provide timing references for execution of the operating program and to function in conjunction with the Analog-to-Digital (A-D) Converter to convert the dc output of the Amplifer, Demodulator, and Filter Circuit to an equivalent BCD number.

c. Display. The Display is updated during each program cycle as required to indicate current range, mode, input power level, and/or over/under-range status. After each update the new indications are continuously maintained until the next update.

d. Controller. The Controller provides the necessary hardware/software interface between the operating program and the remainder of the Power Meter circuits.

e. Pushbutton Switch Assembly. The Push-button Switch Assembly is enabled when the Power Meter is configured for local operation and is disabled when the Power Meter is configured for remote operation. When enabled, the switches provide continuous mode select and auto-range qualifier outputs which are processed by the Controller once during each operating cycle to enable the desired Power Meter operation.

f. Remote Interface Circuits. The Remote Interface Circuits enable the Power Meter to be interfaced to a remote controller via an HP-IB or BCD format. Thus, when remote operation is enabled, these circuits essentially take over the

CIRCUIT DESCRIPTIONS

Service Sheet 1 (cont'd)
functions of the Pushbutton Switch Assembly and the Display in that they provide for remote control of Power Meter operation and remote display of the results. When remote operation is enabled, the Pushbutton Switch Assembly is disabled; the Display, however, remains enabled and provides a local display of the output data transmitted to the remote controller.

g. Power Reference Oscillator. The Power Reference Oscillator is enabled when the front-panel POWER REF ON switch is depressed and provides 1 mW at 50 MHz output for calibration purposes.

h. Power Supply Assembly. The Power Supply Assembly is enabled when the LINE ON-OFF switch is set to the ON position and provides +5, +15, and -15 Vdc outputs necessary for operation of the Power Meter circuits.

8-75. Service Sheet 2

8-76. Amplifier, Demodulator, and Filter Circuit. The Amplifier, Demodulator and Filter Circuits convert RF input power levels applied to the Power Sensor into proportional dc outputs. The basic operation of these circuits is described in the following paragraphs.

a. The Power Sensor dissipates RF input power into a 50-ohm termination and generates a dc voltage proportional to the RF input power level.

b. The 220 Hz Multivibrator provides the 220 Hz drive signals to the Power Sensor to switch the dc voltage and thereby generate a modulated 220 Hz signal which is proportional in amplitude to the RF input power level and in phase with the 220 Hz reference signal applied to the phase detector.

c. The Power Sensor's Input Amplifier and the Power Meter's First Amplifier function together to amplify the modulated 220 Hz signal by a factor of 600.

d. The overall gain factor of the Second and Third Amplifiers is determined by the RANGE SELECT input to the Range and Filter Control ROM and the setting of the front-panel CAL ADJ control. The CAL ADJ control is normally set as required to calibrate the Power Sensor and the Power Meter to a known standard. When the CAL ADJ control is set properly, the outputs of the ROM configure the Attenuators such that the minimum and maximum signal levels at A2TP3 (AC) are the same for each range. (For either Watts or dB measurements an in-range input power level corresponds to a 0.3 to 3.6 Vp-p signal level at A2TP3.)

e. The Phase Detector functions as a chopper-stablized amplifier to remove any noise riding on the modulated 220 Hz input. Thus, the output of the Phase Detector is an unfiltered dc signal which is proportional to the true amplitude of the modulated 220 Hz input signal.

f. The Meter Driver Amplifier buffers the ϕ DET output and applies it to the front-panel Meter (M1) via an RC filter and a diode limiter network. Since the response of the meter is not limited by the Variable Low-Pass Filter, the meter serves to provide relatively instantaneous indications of changes in input power level. Calibration of the meter to the front-panel Digital Readout is accomplished via the METER ADJ control.

g. The diode limiter clips over range outputs of the Phase Detector to reduce the time that it takes for the Variable Low-Pass Filter to respond to a full-scale change in input signal level. The response time of the Filter varies with the bandpass selected by the outputs of the ROM. For ranges 5, 4, and 3, the bandpass is 17 Hz. For ranges 2 and 1, the bandpass is reduced by factors of ten to 1.7 Hz and 0.17 Hz, respectively. These bandpass values represent the optimum tradeoff between filter response time and signal-to-noise ratio. On the higher ranges, the gain of the Power Meter is relatively low and the 17-Hz bandpass enables the Filter to respond to a full-scale change in input signal level in 0.1 second (see Figure 3-7). On the lower ranges, the gain of the Power Meter increases and a higher noise level is present at the output of the Phase Detector. Thus, a narrower bandpass is required to maintain the desired signal-to-noise ratio at the input of the A-D Converter. The time required for the Filter to respond to a full-scale change in input signal level is 1 second on range 2 and ten seconds on range 1.

CIRCUIT DESCRIPTIONS

Service Sheet 2 (cont'd)

h. The DC Amplifier buffers the output of the Filter and applies it to the A-D Converter for conversion to a BCD number. The gain of the DC Amplifier is 1 when the CAL FACTOR% switch is set to 100. The gain increases by approximately 1% for each lower-numbered position. The switch is normally set to the position specified on the Power Sensor's CAL FACTOR curve. When the switch is set properly, the output of the DC Amplifier in millivolts indicates the numeric value of the RF input power level. The decimal point and multiplier are provided by the True Range Decoder.

8-77. Auto-Zero Assembly. The Auto-Zero Assembly's function is to remove any dc offset voltage associated with the Power Sensor. When the front-panel SENSOR ZERO switch is pressed, the Controller activates the Sensor Auto-Zero Enable input for a period of approximately four seconds. While this input is active, a feedback loop is configured between the Auto-Zero Assembly and the Power Sensor to allow a capacitor in the Auto-Zero circuit to charge to a value that cancels the dc offset of the Power Sensor. Loop stability is achieved when the Mount Auto-Zero output of the Auto-Zero Assembly holds the dc level at A3TP4 (DC) at 0.000 ± 0.002V. After the Sensor Auto-Zero Enable input is terminated, the feedback loop is broken, and the capacitor is held at the charged value. Thus the Mount Auto-Zero output continues to cancel the dc offset of the Power Sensor, thereby allowing accurate measurement of RF input power levels.

8-78. Analog-to-Digital (A-D) Converter. The Analog-to-Digital Converter (Figure 8-18) operates together with the Counters (see Service Sheet 3) to convert the dc output of the Amplifier, Demodulator, and Filter Circuits to a four-digit BCD number which indicates the numeric value of the RF input power level applied to the Power Sensor. Operation of the A-D Converter can be divided into three basic functions, auto-zero function, measurement function, and conversion function. As shown in Figure 8-15, Sheet 1, a subroutine is dedicated to each of these functions and the functions are performed in sequence during every program cycle. (Additional auto-zero functions may be enabled at other times in the program cycle if various predetermined operating conditions are detected.) During the auto-zero subroutine, a feedback loop is closed to remove any dc offset voltage present at the reference (+) input of the Ramp Generator. During the measurement subroutine, the Ramp Generator is charged to -7 times the dc input value. During the conversion subroutine, the Ramp Generator is discharged at a linear or exponential rate and the Counters are clocked to measure the time that it takes for the Ramp Generator to discharge through threshold.

8-79. A-D Converter Auto-Zero Function. The auto-zero function is enabled when the Controller activates the AUTO-ZERO ENABLE input to the A-D Converter. During the Auto-Zero subroutine, this input is maintained for 133 ms (the Controller enables the main Counter when the input is activated, and terminates the input when the count reaches 8000). For auto-zero functions generated at other points in the program cyle, the auto-zero timing interval varies according to the instantaneous conditions detected. While the AUTO-ZERO ENABLE input is active, the Auto-Zero Switch is closed and a feedback loop is configured from the output of the Comparator to the positive input of the Ramp Generator. Loop stability is achieved when capacitor C1 charges such that the output of the Comparator is 2.00 Vdc. When the Auto-Zero Enable input is terminated, the Auto-Zero Switch is opened and the charge on C1 holds the output of the Comparator at 2.00 Vdc which is the appropriate mid-range value for initiating the measurement function.

8-80. A-D Converter Measurement Function. The measurement function is initiated when the Controller activates the Load DC INPUT. This input is then maintained active for approximately 33 ms. (The Controller enables the Main Counter when the input is activated and terminates the input when the output of the Main Counter reaches 2000.) While the input is active, the DC Input Switch is closed to allow C3 to charge to -7 times the DC Input level. When the input is terminated, the DC Input Switch is opened and the Controller enables a linear or log conversion to discharge C3.

8-81. A-D Converter Linear Conversion. A linear conversion function is selected to discharge C3 when the Power Meter is configured for WATT MODE operation. During the conversion, C3 is discharged at the rate of 3 mV per clock pulse, and the Main Counter is counted up from 0000 on

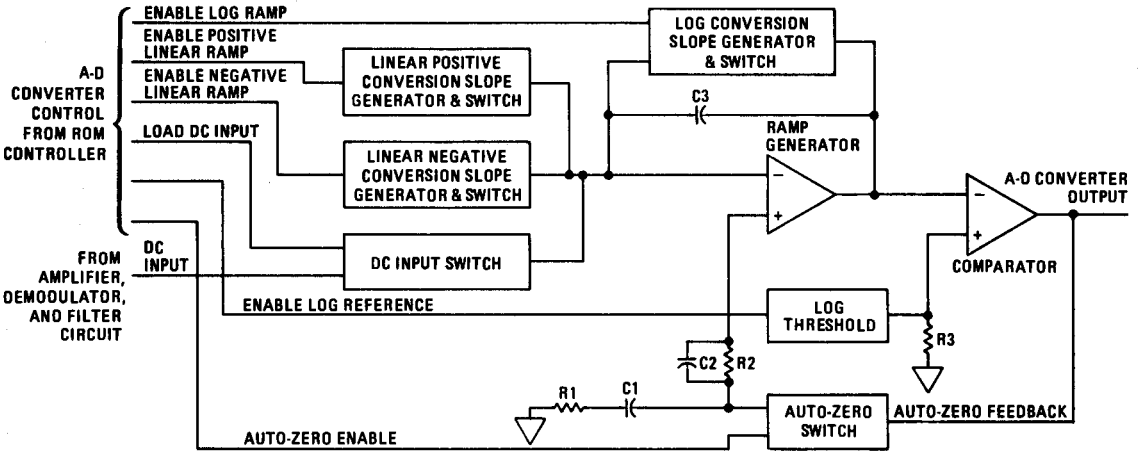

A. A-D CONVERTER FUNCTIONAL BLOCK DIAGRAM

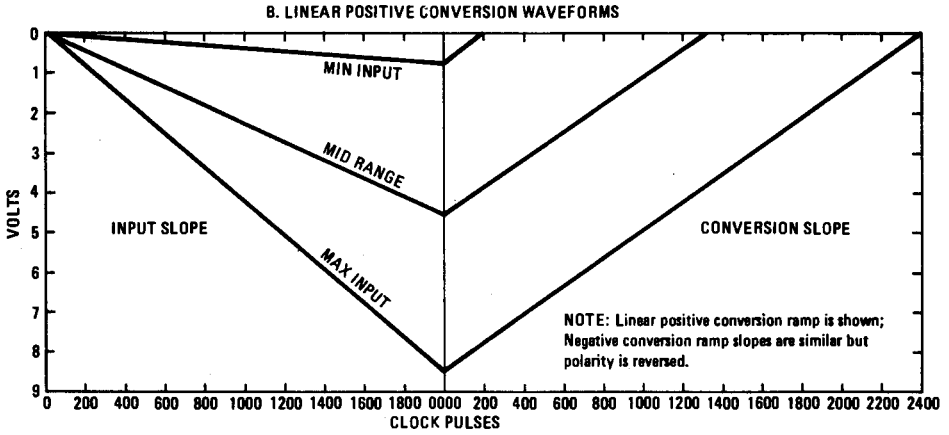

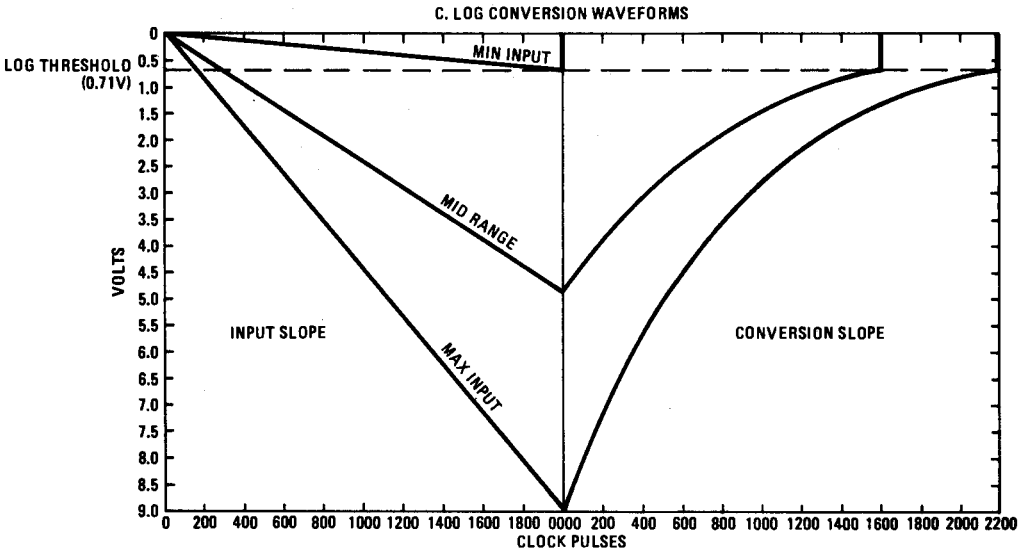

Figure 8-18. Analog-to-Digital Converter Simplified Diagram and Waveforms

CIRCUIT DESCRIPTIONS

Service Sheet 2 (cont'd)

every other clock pulse. Thus, the Main Counter is incremented each time that C3 is discharged by 7 mV. Since C3 was charged to -7 times the dc input level during the measurement function, each count represents a 1 mV dc input level. When C3 is fully discharged, then the output of the Main Counter is equal to the original dc input in millivolts. As stated previously, this number represents the RF input power level applied to the Power Sensor.

8-82. The operating sequence for the linear conversion function is described in the following paragraphs.

a. The Controller first checks the A-D qualifier output of the Comparator. If the qualifier is a logic one, the Controller activates the LRP input to enable a positive conversion. If the qualifier is a logic 0, the Controller activates the LRM input to enable a negative conversion. The LRP or LRM input is then held active for the duration of the conversion.

b. After the LRP or LRM input is activated, the Controller alternately monitors the qualifier outputs of the Comparator and the Main Counter to detect completion of the conversion when the Comparator qualifier changes state, or when the output of the Main Counter reaches 1200. If the Comparator's output changes state before the output of the Main Counter reaches 0100, an under-range conversion is detected. If the output of the Comparator does not change state by the time the output of the Main Counter reaches 1200, an over-range conversion is detected. If the output of the Comparator changes state anywhere between these two points in time, the Controller detects an in-range conversion.

c. When the Controller detects that the conversion is completed, it terminates the LRP or LRM input and updates the front-panel status and Digital Readout indications as described in Service Sheet 3.

8-83. A-D Converter Log Conversion. A log conversion function is selected to discharge C3 when the Power Meter is configured for dB operation. This function is similar to a linear conversion except as noted below.

a. The LRL input is activated to discharge C3 at an exponential rate so that the output of the counter indicates the RF input power level in dB.

b. The LLGR input is activated to change the Comparator's threshold input to –0.71V so that an under-range condition is detected if C3 charges to less than this value during the measurement function. (The negative linear conversion mentioned above serves to indicate high noise levels at the input to the Power Sensor. Any true input power level will cause a positive dc input to be applied to the A-D Converter.)

c. An over-range conversion is detected if the A-D qualifier does not change state before 1100 counts (> +1.26 Vdc input).

d. The Controller may cause the Instruction Decoder to execute a dB relative conversion before updating the front-panel Digital Readout indication. During the dB relative conversion, the output of the counter is changed to indicate the RF input power level with respect to a reference value stored previously (refer to Service Sheet 3).

8-84. True-Range Decoder. The function of the True-Range Decoder is to indicate the power level represented by the dc voltage at A3TP4 (DC) and, if the power level is to be displayed in dB, to preset the Main Counter to the minimum threshold of the range selected. The Power Meter has five measurement ranges. Each range covers a power of ten (1–12µW, 10–120 µW, 100 µW-1.2 mW, etc.) and slightly overlaps the previous range to prevent ambiguous measurements. The exponents assigned to the five ranges vary according to the sensitivity of the Power sensor in use. Thus, the indication displayed for any range is only relative until the sensitivity of the Power Sensor is factored in. The True-Range Decoder accomplishes this by determining the sensitivity of the Power Sensor from the Mount Resistor Input, then combining this information with the Range Select and Log Mode outputs of the Controller to address a ROM. The resulting outputs of the ROM are described in the following paragraphs.

a. True-Range Exponent: This output is provided for both linear and dB operation of the Power Meter and consists of a five-bit binary code which indicates the input power level as 10^{-x}

CIRCUIT DESCRIPTIONS

Service Sheet 2 (cont'd)

b. Watts Mode, True Range: This output is provided only for linear operation of the Power Meter (LOG Mode input inactive) and lights a front-panel lamp to indicate that the Digital Readout is in Watts (W), milliwatts (mW), microwatt (μW), or nanowatts (nW).

c. True-Range Counter and Sign Preset: This output is provided only for dB operation of the Power Meter (Log Mod input active) and presets the Main Counter to the predetermined value assigned as the starting point for the particular dB range selected. (For any A-D conversion, the Main Counter is always preset to the lowest value associated with a particular range and then counted in the direction of increasing power. When WATT Mode operation of the Power Meter is selected, the starting value for each range is ± 0000. When dB mode operation of the Power Meter is selected, the starting point for each range depends on the sensitivity of the Power Sensor; e.g. for the -10 dB range the Main Counter is preset to 2000 and the signal is preset to -, for the 20 dB range, the Main Counter is preset to 1000 and the sign is preset to +).

d. Decimal Point Select: This output is provided for both linear and dB operation of the Power Meter and lights the appropriate decimal point on the Digital Readout to indicate the true sensitivity of the range selected (e.g., 1.000 mW, 10.00 mW, 20.00 dB, etc.).

8-85. Display Assembly. The Display Assembly indicates the Power Meter's operating mode and range status, and displays the sign and numeric value of the RF input power level applied to the Power Sensor. The status indications are provided via individual light emitting diode (LED) indicators that are turned on and off independently by the inputs from the Controller and the True-Range Decoder. The power level indications are displayed via numeric segment indicators (Digital Readout). The sign indiction is controlled directly by the output of the Controller. When the Display Sign — (minus) input is active, the center segment of the first indicator is lighted to display a minus (–) sign; when the input is not active, the segment is turned off to indicate a positive sign.

8-86. The numeric value indiction is effected by clocking the BCD output of the Main Counter into the Display Drivers on the positive-going edge of the Display Count Strobe. The Display Drivers then convert the BCD input into a format that lights individual segments of the numeric indicators to form a decimal number. (Decimal point positioning is controlled by the Decimal Point Select output of the True-Range Decoder.) The LBLANK input to the Display Drivers is activated to blank all but the most significant digit for various under and over-range conditions. Similarly, the Display Drivers also employ a ripple blanking capability to turn off the most significant digit when it is a zero.

8-87. Service Sheet 3

8-88. General. In order to understand the operation of the circuits shown on the block diagram, it is necessary to consider Power Meter operation in terms of the operating program stored in the State Controller. As stated previously, the program is executed on a cyclic basis with one measurement taken and the results displayed per cycle. On Figure 8-15, Sheet 1, it is shown that each cycle starts when the program enters the Local/Remote Branch or Local Initialize Subroutines and ends when the program exits the Display and Remote Talk Subroutine. Between these two points in time a number of additional subroutines are executed to control circuit operation on a step-by-step basis. Each step is a two-way communication between the program and one or more circuits. The talk lines are the outputs of the Instruction Decoder, and the listen lines are the qualifier inputs to the Line Selector. To effect the communication, each step occupies two addresses to allow an either/or decision and to select the next step (refer to paragraph 8-94, Program Execution). Since the decisions are made in series, each subroutine can be viewed as a sequential logic circuit charged with the responsibility of controlling one or more operating functions.

8-89. For purposes of definition, the Power Meter operating functions can be divided into two classes, fixed and variable. Fixed functions are basic to each measurement and are performed during each cycle. Variable functions are associated with a particular mode, measurement status, etc. They are performed only when a predetermined condition is detected during execution of the program cycle. On Figure 8-15, Sheet 1, fixed functions are

CIRCUIT DESCRIPTIONS

Service Sheet 3 (cont'd)

indicated by a single-line exit from a subroutine; variable functions are indicated by multi-line exits.

8-90. For maintenance purposes, it is convenient to think of each operating function as a window that can be opened or closed at some point in the program cycle. In some cases the program opens the window for a fixed amount of time to enable the function, then closes the window to terminate that function. In other cases the program opens the window and latches a circuit to keep it open for the remainder of the cycle. This type of window is then checked at the start of each future program cycle. If the type of operation selected does not change, the circuit is relatched to keep the window open for another cycle. If the type of operation changes, the circuit is unlatched and a new circuit is latched to keep a different window open during the program cycle.

8-91. In order to understand Power Meter operation to the level required for troubleshooting, it is necessary to know exactly when, why, and how a window is opened or closed to enable or terminate an operating function. Table 8-6 is provided as an aid to this understanding. This table describes the function(s) of each address or group of addresses, and references a signal flow description which indicates how the hardware circuits operate to perform the function. To close the theory/troubleshooting loop, an additional reference is made to a checkout procedure which can be used to verfiy that the function was performed properly.

8-92. The best way to use the information in Table 8-6 is in small segments. Refer to Figure 8-15 and follow program execution starting at the Power Up Subroutine. If circuit operation is obvious, go on to the next subroutine. If it is not obvious, refer to Table 8-6 and proceed to the Block Diagram Description referenced. The Block Diagram Descriptions are written in terms of hardware operation. They summarize qualifier/instruction communication and concentrate on explaining how the instruction is processed to enable the function, and on how the qualifier is generated to indicate status. After a general understanding of hardware operation is gained, go back to Figure 8-15 and trace out the address branching required to effect the qualifier/instruction communications talked about in the Block Diagram Description. When a logic analyzer is available, each of these address branches serve as a valuable tool for troubleshooting. Overall circuit operation can be rapidly analyzed by looking at key addresses within the subroutines (refer to example provided under TROUBLESHOOTING, Table 8-3, Standard Instrument Checkout.) When the problem is isolated to a circuit, additional addresses can be selected as sync points for checking circuit operation on a step-by-step basis.

Table 8-6. Operating Program Descriptions (1 of 11)

Sub-Routine	Address	Function	Branch To	Troubleshooting Refer to	Block Diagram Description	
					Service Sheet	Title
Power Up	000	Blank Display (LSOR; UNDER RANGE or OVER RANGE indicator will light depending on whether under/over range decoder powers up in set or reset mode).	Address 001_8	Table 8-3, Step 1	2	Display Assembly
					3	Program and Remote Interface Circuit Initialization.
	001, 032, 033	a. Count to range counter down to range 0(LCRD)	Address 034_8	Table 8-3, Step 1	10	Range Counter
		b. Clear main counter and set sign positive (LCLR)		Table 8-3, Step 1	9	Main Counter
		c. Load contents of main counter (0000) into reference register to clear register (LLRE)		Table 8-3, Step 1	9	Reference Register
		d. Display blanked count and sign (0_. __) (LTC) Note: - indicates blanked digit		Table 8-3, Step 1	6	Display Assembly
	034	a. Auto zero A-D converter for 8000 counts (LAZ, LCNT)	Address 035_8	Table 8-3, Step 1	2	A-D Converter, Auto-Zero Function
					3	A-D Converter Auto-Zeroing
		b. Count range counter down to range 7 (LCRD)	Address 035_8	Table 8-3, Step 1	10	N/A (Circuit Operation covered under Digital Integrated Circuits and Symbols)
	035	a. Count range counter down to range 5 (LCRD)	Local/Remote Branch Subroutine Address 026_8	Table 8-3, Step 1	10	
		b. Load mode select input into mode register (LCKM)	Local/Remote Branch Subroutine Address 026_8	Table 8-3, Step 1	3	Mode Selection
Local/ Remote Branch	026	Check whether local or remote operation is selected (Remote, 037_8)	a. Local initialize subroutine, address 052 for local operation.	Table 8-3, Step 1	3	Program Execution
					4	Remote Enable
			b. Address 042 for remote operation	Table 8-4, Error #3 (HP-IB Opt.) Table 8-5, Step 6 (BCD Option)	5	General Description

Table 8-6. Operating Program Descriptions (2 of 11)

Sub-Routine	Address	Function	Branch To	Troubleshooting Refer To	Block Diagram Description	
					Service Sheet	Title
Local/ Remote Branch (cont'd)	042	Check whether free run or triggered operation is selected (HOLD, 036_8; associated with BCD Interface Option 024 only)	a. Branch to Remote Initialize sub-routine, Address 012 for free run or if trigger is received to initiate program cycle	Table 8-4, Error #3 (HP-IB Option)	3	Program Execution
					4	Measurement Rate Programming Command Processing
				Table 8-5, Step 3 (BCD Option)	5	Measurement Rate Programming, Remote Qualifier/ Program Interface and Talk Cycle
			b. 043 if trigger not received			
	043	Auto-zero A-D Converter one count (LAZ)	Address 026	Table 8-4, Error #3, (HP-IB Option) Table 8-5, Step 3 (BCD Option)	2,3	A-D Converter Auto-Zero Function
Remote Initialize	012	a. Hold range selected in previous program cycle if autoranging selected (Blank Instruction)	Address 013	Table 8-4, Error #3 (HP-IB Opt.) Table 8-5, Step 14 (BCD Option)	3	Range Selection
					4	Range Programming Command Processing
					5	Range Programming Commands
		b. Load remote range select inputs into range counter if autoranging not selected (LLRA)	Address 013	Table 8-4, Error #4 and 4.5 (HP-IB Option) Table 8-5, Step 3 (BCD Option)		
	013, 014	a. Count range counter down to range 5 if range 6 or 7 selected (LCRD)	Address 015	Not verified	3	Range Selection
					4	Range Programming Processing
					5	Range Programming Commands
		b. Clear main counter (LCLR)	Address 015	Table 8-4, Error #4, 4.5 &12 (HP-IB Option) Table 8-5, Steps 3 & 6 (BCD Option)	9	N/A (Circuit Operation covered under Digital Integrated Circuits & Symbols)
	015	a. Check whether delayed or immediate measurement enabled (FAST, 035_8)	Address 016 for delayed measurement	Table 8-4, Error #3 (HP-IB Option) Table 8-5, Step 3, (BCD Option)	3	Program Execution
					4	Measurement Rate Programming Command Processing
			Address 101 for immediate measurement	Table 8-4, Erro #33 (HP-IB Option) Table 8-5, Step 11 (BCD Option)	5	Measurement Rate Programming, Remote Qualifier/ Program Interface and Talk Cycle

Table 8-6. Operating Program Descriptions (3 of 11)

Sub-Routine	Address	Function	Branch To	Troubleshooting Refer To	Block Diagram Description	
					Service Sheet	Title
Remote Initialize Cont'd)	016, 017, 030, 031	a. Determine Range (YR1, YR2, YR3)	Auto-Zero subroutine, Address 056, for range 3, 4, or 5	Table 8-4, Error #11 and 12 (HP-IB Option) Table 8-5, Steps 5 & 6 (BCD Option)	3	Range Selection,
		b. Load mode select inputs into mode register	Delay subroutine, Address 036, for range 1 or 2	Table 8-4, Errors #4, 4.5 and 5 (HP-IB Option) Table 8-5, Steps 3 and 4 (BCD Option)		Mode Selection
	101, 102	a. Determine mode selected for previous program cycle	Address 104 if Watts mode was selected for previous program cycle	Table 8-4, Error #36 (HP-IB Option) Table 8-5, Step 13 (BCD Option)	3	Mode Selection
		b. Load mode select inputs into mode register to select mode for current program cycle (LCKM)	Address 103 if Watts mode was not selected for previous program cycle	Table 8-4, Errors #3 and 33 (HP-IB Option) Table 8-5, Steps 11 and 12 (BCD Option)		
	103	a. Auto-zero A-D converter for 1000 counts (LAZ, LCNT) b. Clear main counter (LCLR)	Address 104	Table 8-4 Error #33 (HP-IB Option) Table 8-5, Step 11 (BCD Option)	2,3	A-D Converter Auto-Zero Function
	104	a. Auto-zero A-D converter for 1000 counts (LAZ, LCNT) b. Clear main counter (LCLR)	Measurement Subroutine Address 061	Table 8-4, Error #33 (HP-IB Option) Table 8-5, Step 11 (BCD Option)	2, 3	A-D Converter Auto-Zero Function
Local Initialize	052, 053, 054, 055	a. Count range counter down to range 5 if range 0,6, or 7 is selected (LCRD) b. Load mode select inputs into mode register	Auto-Zero Subroutine, Address 056	Table 8-3, Step 1 (range 5 branch) Step 14 (range 3 branch) Step 19 (range 1 branch) Step 24 (mode register loaded)	3	Range Selection, Mode Selection

Table 8-6. Operating Program Description (4 of 11)

Sub-Routine	Address	Function	Branch To	Troubleshooting Refer To	Block Diagram Description	
					Service Sheet	Title
Auto-zero Subroutine	056	Clear main counter (LCLR)	Address 057	Table 8-3, Step 1	2, 3	A-D Converter Auto-Zero Function
	057	a. Auto-zero A-D converter for 8000 Counts (LAZ, LCNT) b. Clear main counter (LCLR)	Measurement Subroutine Address 061			
Measurement Subroutine	061, 062	a. Load dc input voltage into A-D converter for 2000 counts (LINP, LCNT) **NOTE** *Ramp charges to –7.09 times dc input.* b. Clear main counter (LCLR)	Address 063	Table 8-3, Step 1	2, 3	A-D Converter Measurement Function
	063, 064	a. Check mode selected b. Load outputs for true-range decoder into sign detector and main counter if dBm, dB [REF], or dB (REL) mode selected.	Address 065 for WATT mode Address 066 for dBm dB [REF] or dB (REL) mode	Table 8-3, Step 1 Table 8-3, Step 24 (dBm mode) Step 32 (dB [REF] mode)	3 3	Mode Selection A-D Converter Log Conversion
	065, 037	a. Check whether A-D ramp has changed to negative or positive dc input b. Load outputs of true-range decoder (-sign, 0000 count) into sign detector and main counter (LPSC) if dc input was negative, indicating negative power (noise) input c. Enable A D ramp positive-conversion slope (LRMP) is dc; input was positive	Linear Negative Conversion Subroutine, Address 076, for negative dc input Linear Positive Conversion Subroutine, Address 071, for positive dc input	Table 8-3, Step 10 Table 8-3, Step 1	2,3	A-D Converter Linear Conversion
	066, 051, 107	a. Check whether dc input is under range (A-D ramp input slope does not exceed log threshold) b. Light UNDER RANGE lamp (LSUR) and blank display (LSOR) if dc input under range	Under Range Subroutine, Address 174 if dc input under range Log Conversion Subroutine Address 136 if dc input not under range	Table 8-3, Step 24 Table 8-3, Step 25	2, 3	A-D Converter Log Conversion

Table 8-6. Operating Program Description (5 of 11)

Sub-Routine	Address	Function	Branch To	Troubleshooting Refer To	Block Diagram Description	
					Service Sheet	Title
Measurement Subroutine (cont'd)	066, 051, 107 (cont'd)	c. Enable A-D ramp log-conversion slope (LRMP) if dc input not under range.				
Linear Positive-Conversion Subroutine	067, 071, 072, 073, 074, 075	a. Enable linear positive-conversion ramp (LRMP) and count main counter up on every other clock pulse (LCNT) b. Check A-D converter output qualifier prior to each count to detect under-range, in-range or over-range condition c. Detect under-range (address 067) if A-D converter output qualifier changes state before main counter is counted up 100 counts d. Detect in-range condition (address 072 or 074) if A-D converter output qualifier changes state between 100 and 1199 counts e. Detect over-range condition (address 075) if A-D converter output qualifier does not change state before 1200 counts f. Clear over/under range decoder (LCOR)	Under-Range Subroutine Address 174 if <100 counts Display and Remote Talk subroutine Address 177, if between 100 and 1199 counts Over Range Subroutine, Address 147, if 1200 counts	Table 8-3, Step 7 Table 8-3, Step 1 (addresses 071, 067,072, 073) Step 3 (addresses 074, 075) Step 6 (address 074 LCOR instruction Table 8-3, Step 5	2,3	A-D Converter Linear Conversion
Linear Negative-Conversion Subroutine	076 077, 130, 131, 132, 133	a. Enable linear negative conversion ramp (LRMP) and count main counter up on every other clock pulse (LCNT) b. Check A-D Converter output qualifier prior to each count to detect under-range, in-range or over-range condition c. Detect under range (address 077) if A-D converter output qualifier changes before main counter is counted up to 100 counts.	Under Range Subroutine Address 174 if <100 counts Display and Remote Talk Subroutine, Address 177, if between 100 and 1199 counts	Table 8-3, Step 10 (addresses 076,130, 077) Table 8-3, Step 38 (addresses 130, 131) Steps 39 and 42 (addresses 131, 132, 133) Step 41 (address 131, LCOR instruction	2, 3	A-D Converter Linear Conversion

Table 8-6. Operating Program Description (6 of 11)

Sub-Routine	Address	Function	Branch To	Troubleshooting Refer To	Block Diagram Description	
					Service Sheet	Title
Linear Negative-Conversion Subroutine cont'd)		d. Detect in range condition (address 131 or 133) if A-D converter output qualifier changes between 100 and 1199 counts. e. Detect over range condition (address 134) if A-D converter output qualifier does not change state before 1200 counts f. Clear over/under range decoder (LCOR)	Over Range Subroutine, address 147 if 1200 counts	Table 8-3, Step 40		
Log Conversion	135, 136, 137, 150, 151, 152, 153, 154, 155, 156, 157, 160, 161, 162, 163, 164, 165, 166, 167	**NOTE** *For log (dB) conversion, the main counter can be preset to a negative number and counted down, or it can be preset to a positive number and counted up. In addition, if the output of the main counter reaches 0000 when it is being counted down, a borrow pulse is generated to change the direction of counting. The count decoding of this subroutine is such that an in-range measurement is detected whenever the A-D converter output qualifier changes state before 1100 clocks are applied to the main counter regardless of the direction of counting.* a. Enable log-conversion ramp (LRMP) and count main counter up or down on every other clock pulse (LCNT) b. Check A-D converter output qualifier prior to each count to detect in-range or over-range condition c. Detect in-range condition (address 135, 137, 151, 153, 155, 157, 161, 165), if A-D Converter output qualifier changes state before 1100 counts	dB Relative Subroutine, address 170 if <1100 counts Over range subroutine, address 147, if >1100 counts	2, 3 Table 8-3, Step 25 (address 135) Table 8-3, Step 26 (address 135, 136 137, 150, 151, 152) Step 27 (address 153, 154) Step 28 (address 155, 156, 157, 160, 161, 162, 163, 164, 165)		A-D Converter Log Conversion

Table 8-5. Operating Program Description (7 of 11)

Sub-Routine	Address	Function	Branch To	Troubleshooting Refer to	Block Diagram Description	
					Service Sheet	Title
Log Conversion (cont'd)		d. Detect over-range condition (address 164 or 167) if A-D converter output does not change state by 1100 counts e. Clear over/under-range decoder (LCOR		Step 31 (addresses 163, 164 165, 166, 167)		
Relative dB	170	Check whether dBm mode selected	Display and Remote Talk Subroutine, Address 177, if dBm mode selected Address 171 if dBm mode not selected	Table 8-3, Step 25 Table 8-3, Step 32	3	Mode Selection
	171, 172, 141, 173	a. Store contents of main counter in reference register (LLRE) if dB [REF] mode selected b. Load contents of reference register into relative counter (LCOR) and set NRZO qualifier logic 1 c. Count relative counter down (LREL) to 0000 (NRZO=0) and count main counter up or down (LCNT) as required to algebraically subtract reference from measured power level.	Display and Remote Talk Subroutine Address 177	Table 8-3, Step 32 (except address 171, YMI branch) Step 33 (address 171, YM1 branch)	3	dB Relative Conversion
Under-Range	174,175	Light UNDER RANGE lamp (LSUR) if measurement was taken on ranges 2 through 5	Address 176 if measurement was taken on ranges 2 through 5 Over/Under Range Continue Subroutine Address 047 if measment was taken on ranges 0 or 1	Table 8-3, Step 7 (range 5) Step 15 (range 3) Table 8-3, Step 20	2 3	Display Assembly A-D Converter Linear Under-Range Conversion A-D Converter Log Under-Range Conversion Range Selection
	176	Blank display (LSOR) if auto-ranging enabled	Address 105 if auto ranging enabled Over/Under Range Continue Subroutine Address 047 if auto-ranging not enabled	Table 8-3, Step 8 Table 8-3, Step 7		

Table 8-6. Operating Program Description (8 of 11)

Sub-Routine	Address	Function	Branch To	Troubleshooting Refer To	Block Diagram Description	
					Service Sheet	Title
Under-Range (cont'd)	105	Count range counter down one range (LCRD)	Auto Zero Sub-routine Address 056 if measurement was taken on range 4 or 5	Table 8-3, Step 8		
			Delay Subroutine, Address 036, if measurement was taken on range 2 or 3	Table 8-3, Step 15		
Over-Range	147	Blank Display (LSOR)	Over/Under Range Continue Sub-routine, Address 047, if auto-ranging is not enabled	Table 8-3, Step 5 (LSOR instruc-tion) Step 6 (branch to address 047)	2 3	Display Assembly A-D Converter Linear Over-Range Conversion
			Address 146 if auto-ranging is enabled	Table 8-3, Step 9		
	145, 146	Count range counter up one range if measurement was taken on range 2, 3, or 4	Auto-Zero Sub-routine, Address 056, if measurement was taken on range 0 2, 3, or 4	Table 8-3, Step 9 (range 4) Step 22 (range 2)		A-D Converter Log Over-Range Conversion
			Address 143 if measurement was taken on range 0, 1or 5	Table 8-3, Step 21		Range Selection
	143	Count range counter up one range if measurement was taken on range 1	Delay Subroutine, Address 036, if measurement was taken on range 1.	Table 8-3, Step 21		
			Over/Under Range Continue Sub-routine, Address 047, if measurement was taken on range 5	Table 8-3, Step 36		
(Over/Under Range Continue	047	Clear main counter (LCLR) if dB [REF] or dB (REL) mode selected	Display and Remete Talk Subroutine Address 177, if Watt or dBm Mode Selected	Table 8-3, Step 6	3	dB Relative Conversion
				Table 8-3, Step 36		
			Address 040 if dB [REF] or dB (REL) mode selected			
	050	Load contents of main coun-ter into reference register (LLRE) if dB [REF] mode selected	Display and Remote Talk Subroutine, Address 177	Table 8-3, Step 36 (dB (REL) mode) Step 37 (dB [REF mode)		

Table 8-6. Operating Program Description (9 of 11)

Sub-Routine	Address	Function	Branch To	Troubleshooting Refer To	Block Diagram Description	
					Service Sheet	Title
Delay	036, 127, 113, 116, 117, 115	Auto-Zero A-D Converter for 666 ms (main counter is cleared by LCLR instruction, auto-zeroing is enabled by LAZ and LCNT instructions. Auto zero period is 8000 counts for each address) **NOTE** *This subroutine is associated with range 1 and 2 measurements. It essentially serves as a program pause to allow the output of the variable low-pass filter to settle.*	Address 006	Table 8-3, Step 15	2 2, 3	Amplifier, Demodulater & Filter Circuits A-D Converter Auto-Zero Function
	006	Check whether local or remote operation is enabled (REMOTE 378)	Auto-Zero Subroutine, Address 056 for local operation Address 120 for remote operation	Table 8-3, Step 15	3 4 5	Program Execution Remote Enable General Description
	120	Check whether immediate or delayed measurement is enabled	Auto-zero subroutine, Address 056 for immediate measurement Address 123 for delayed measurement		3 4 5	Program Execution Measurement Rate Programming Command Processing Measurement Rate Programming, Remote Qualifier/ Program Interface and Talk Cycle
	123, 122	Auto-zero A-D Converter for 267 ms (main counter is cleared by LCLR instruction; auto-zeroing is enabled by LAZ and LCNT instructions. Auto-zero period is 8000 counts for each address)	Auto-Zero subroutine, address 056	Table 8-4, Errors #4, and 4.5 (HP-IB Option) Table 8-5, Step 3 (BCD Option)	2,3	A-D Converter Auto-Zero Function
Display and Remote Talk	177	Transfer count and sign to front panel display and inform remote interface circuits that measurement completed (LTC)	Address 022	Table 8-3 Step 1	2 2, 3	Display Assembly True-Range Decoder A-D Converter Linea Conversion A-D Converter Log Conversion

Table 8-6. Operating Program Description (10 of 11)

Sub-Routine	Address	Function	Branch To	Troubleshooting Refer To	Block Diagram Description	
					Service Sheet	Title
Display and Remote Talk (cont'd)	022	Auto-zero A-D converter for one count (LAZ)	Address 023	Table 8-3, Step 2	2, 3	A-D Converter Auto-Zero Function
	023	Check whether remote talk selected (TALK 328)	Address 024 if remote talk not selected.	Table 8-3, Step 2	3 4	Program Execution Talk Cycle
			Address 044 if remote talk selected		5	Measurement Rate, Programming, Remote Qualifier/ Program Interface, and Talk Cycle
	024	Check whether free-run or triggered operation is selected (HOLD 036_8)	Local/Remote Branch Subroutine, Address 026, for free-run or if trigger is received to initiate new program cycle	Table 8-3, Step 2	3 4	Program Execution Measurement Rate Programming Command Processing
			Address 025 if trigger is not recieved	Table 8-4, Errors #4 and 4.5 (HP-IB Option); (N/A for BCD Option)	5	Measurement Rate Programming, Remote Qualifier/ Program Interface, and Talk Cycle
	025	Check whether local or remote operation is selected (REMOTE 0378)	Local Initialize Subroutine, Address 052 for local operation	Not Verified	3 4	Program Execution Remote Enable
			Address 022 for remote operation	Table 8-4, Error #3 (HP-IB Option) (N/A for BCD Option)	5	General Description
	044	Check whether remote listener ready for data (RFDQ, 348)	Address 022 if remote listener not ready for data	Table 8-4, Error #1 (HP-IB Option); (N/A for BCD Option)	3 4 5	Program Execution Talk Cycle Measurement Rate Programming, Remote Qualifier/ Program Interface and Talk Cycle
			Address 045 if remote listener ready for data			
	045	Check whether data accepted line set (DACQ, 318)	Local/Remote Branch Subroutine Address 045, if line set	Not Verified	3 4	Program Execution Talk Cycle
			Address 046 if line reset	Table 8-4, Error #1 (HP-IB Option) Table 8-5, Step 2 (BCD Option)	5	Measurement Rate Programming, Remote Qualifier/ Program Interface and Talk Cycle

Table 8-6. Operating Program Description (11 of 11)

Sub-Routine	Address	Function	Branch To	Troubleshooting Refer to	Block Diagram Description	
					Service Sheet	Title
Display and Remote Talk cont'd)	046	Set data valid line to enable output data transfer (LSDAV)	Address 110	Table 8-4, Error #1 (HP-IB Option) Table 8-5, Step 2 (BCD Option)	3 4 5	Program Execution Talk Cycle Measurement Rate Programming, Remote Qualifier/ Program Interface and Talk Cycle
	110	Check whether data accepted line set to indicate data received OK (DACQ, 318)	Address 111 if data accepted	Table 8-4, Error #1 (HP-IB Option) Table 8-5, Step 2 (BCD Option)	3 4 5	Program Execution Talk Cycle
			Address 106 if data not accepted	Table 8-5, Step 3 (BCD Option) (N/A for HP-JB Option)		
	106	Auto-zero A-D converter one count (LAZ)	Address 110	Table 8-5, Step 3 (BCD Option); (N/A for HP-IB Option)	2	Analog-to-Digital Converter Auto-Zero Function
	111	Reset data valid line to indicate data transferred (LSDAV)	Address 112	Table 8-4, Error #1 (HP-IB Option) Table 8-5, Step 3 (BCD Option)	3 4 5	Program Execution Talk Cycle Measurement Rate Programming, Remote Qualifier/ Program Interface, and Talk Cycle
	112	Check whether Power Meter has more data for remote listener (MORE DATA 338)	Address 110 if more data	Table 8-4, Error #1 (HP-IB Option] (N/A for BCD Option)	3 4 5	Program Execution Talk Cycle Measurement Rate Programming, Remote Qualifier/ Program Interface, and Talk Cycle
			Local/Remote Branch Subroutine Address 026 if no more data	Table 8-4, Error #2 (HP-IB Option) Table 8-5, Step 3 (BCD Option)		

8-93. Program and Remote Interface Circuit Initialization. When power is turned on, a Master Reset (LPU) is generated by the Power Up Detector to select local operation of the Power Meter (refer to Service Sheets 4 and 5) and to initialize the operating program to power up address 0008. If the Power Meter is subsequently configured for remote operation and a device clear input is received, the remote interface circuits also generate a power up reset. The power up reset output of the Remote Interface Circuits reinitializes the operating program to power up address 000_8 but it does not terminate remote operation. Instead, it presets the Remote Interface Circuits to select the following operating conditions: WATT MODE, Range 6 (counted down to range 5 before measurement), Autoranging enabled, CAL FACTOR % switch disabled.

8-94. Program Execution. The operating program consists of a group of 16-bit data words stored in the State Controller. The words are designated by address with 0008 being the lowest address and 3778 being the highest address. As stated previously, a power up reset signal (LPU) is generated by the Controller when power is turned on to initialize the program to starting address 0008. From then on the program is self-executing with branching between the words being controlled by the Power Meter operating conditions detected. Thus, the program is essentially a sequential logic circuit which interfaces with the Power Meter hardware circuits to control their operation. General processing of the operating program by the Controller is illustrated in Figure 8-15, Sheets 2 and 3. In the following examples, specific words are used to illustrate Controller circuit operation associated with local and remote qualifier selection.

A. Example 1. Local Qualifier Selection; Starting Address 00_8.

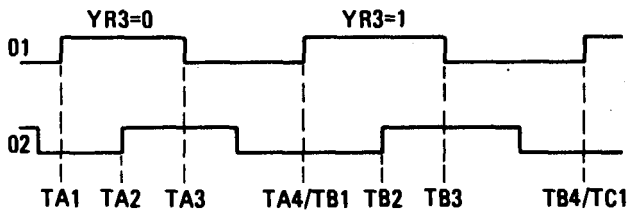

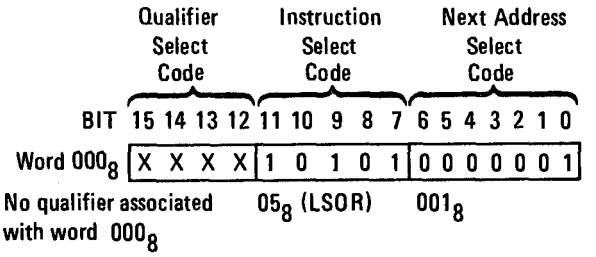

1. TA1 - Leading edge of first 01 Clock following termination of Power Up Reset (LPU).

   a. Address 001_8 clocked into State Register and applied to State Controller.

   b. State Controller produces word 0018:

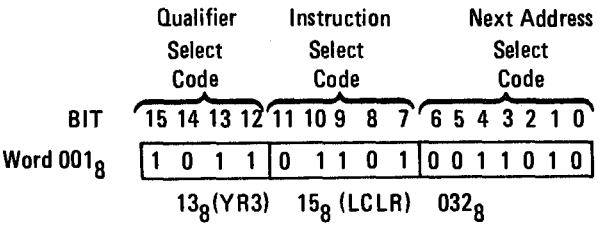

   c. Line selector produces qualifier 138 (YR3).

2. TA2.

   a. YR3 qualifier (logic 1) clocked into Qualifier Register and applied to State Controller (State Controller address changed to 2018). Qualifier Register not clocked again until TB2.

   b. State Controller produces word 201_8.

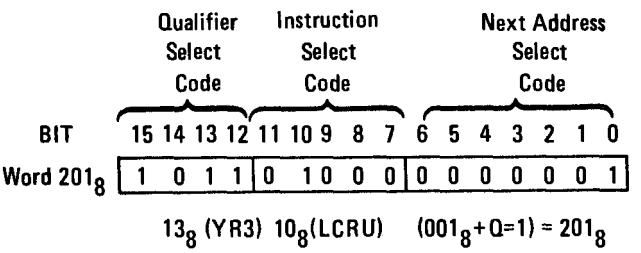

3. TA3 - Instruction Decoder enabled; LCRU instruction generated to count down Range Counter.

Service Sheet 3 (cent'd)

4. TA4/TB1
   a. Address 001 clocked into State Register and applied to State Controller.
   b. Qualifier Register output still high (logic 1) so State Controller produces word 201_8.

5. TB2
   a. YR3 qualifier (logic 0) clocked into Qualifier Register and applied to State Controller. Qualifier Register not clocked again until TC2.
   b. State Controller produces word 001_8.

6. TB3 - Instruction Decoder enabled; LCLR instruction generated to clear Main Counter.

7. TB4/TC1
   a. Address 032 clocked into State Register and applied to State Controller (A=logic 0).
   b. State Controller produces word 032_8.

8. TC2/TC3, etc. - Cycle continues as described in steps 1 through 7.

B. Example 2. Remote Qualifier Selection; Starting Address 035_8

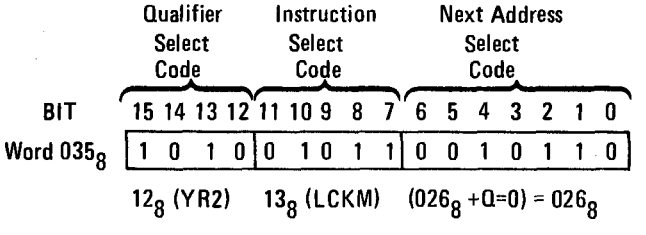

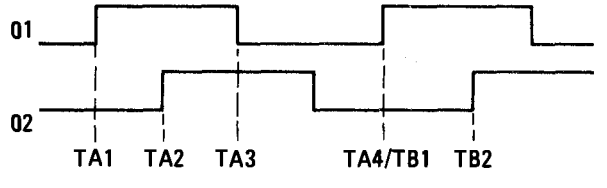

1. TA1
   a. Address 0268 clocked into State Register and applied to State Controller.
   b. Qualifier Register output is logic 0, so State Controller produces word 026_8.
   c. Remote Qualifier (YRMT) is input to Line Selector via Multiplexer in Remote Interface Circuits. When Instruction Code 30_8 through 37_8 and Qualifier Select Code is 17_8, Instruction Decoder is disabled and Remote Qualifier is applied to State Controller via Line Selector.

2. TA2
   a. Remote Qualifier clocked into Qualifier Register and applied to State Register.
   b. If qualifier is low (logic 0), State Controller continues to output word 026_8; if qualifier is high (logic 1), then word 2268 is produced.

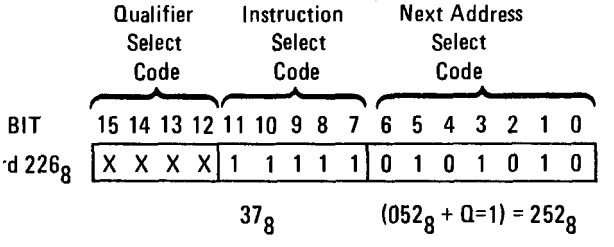

3. TA3 - No operation, Instruction Decoder disabled by Instruction Select Code.

4. TA4/TB1
   a. Next Address Select Code locked into State Register.
   b. State Controller produces word 0428 or 2528.

5. TB2, etc. - Cycle repeated as described in steps 1 through 4.

8-95. As illustrated in the examples, the operating program is not addressed in numerical order. To simplify the understanding of how the program causes the circuits to operate, Figure 8-15 is arranged so that all of the words associated with a particular function are grouped together and designated a subroutine, After the power up subroutine is completed, a complete program cycle is executed for each measurement. The cycle is considered to start at the Local Initialize or Local/Remote Branch subroutine and to end at the Display and Remote Talk Subroutine. (When auto-ranging is enabled and an out-of-range measurement is obtained, a measurement sub-loop is enabled to prevent completion of the program

CIRCUIT DESCRIPTIONS

Service Sheet 3 (cont'd)

cycle until an in-range measurement is obtained on any range, or an out-of-range measurement is obtained on the last range.) When local operation is selected, the program is allowed to free run and measurements are taken asynchronously to changes in the RF input power level. When remote operation is selected, an additional capability is provided to enable the start of each program cycle to be triggered by an external input. Thus, for remote operation, measurements can be taken synchronously or asynchronously to changes in the RF input power level.

8-96. Mode Selection. The Mode Select inputs are applied to the Controller in a "WIRED OR" configuration to enable either Local or Remote mode selection. When the Power Meter is configured for Local Operation, the Remote Enable input to the Pushbutton Switch Assembly is high and the Mode Select outputs of the Remote Interface Circuits are set to the logic 1 (+5V) state. Thus, the Pushbutton Switch Assembly is enabled to select the operating mode for the Power Meter. When the Power Meter is configured for remote operation, the Remote Enable input is low, the outputs of the Pushbutton Switch Assembly are held at logic 1, and the Mode Select outputs of the Remote Interface Circuits select the operating mode of the Power Meter.

8-97. The Mode Select inputs (IYM1 and IYM2) are coded as indicated below to select the operating mode of the Power Meter. These inputs are clocked into the Mode Register at the start of each program cycle by the LCKM output of the Instruction Decoder. The resultant outputs of the Mode' Register are then gated together for the duration of the program cycle to provide the following signals as required to implement the operating mode selected.

Mode	1 YM2	1 YM1
WATT	1	0
dB (REL)	0	1
dB [REF]	0	0
dBm	1	1

a. Mode Qualifiers. These outputs are coded as listed above to indicate the operating mode selected. The y are accessed at various points in the program cycle to control program branching and/or instruction generation,

b. dBm Mode Selected. When the dBm Mode is selected, this output is active and lights the front-panel dBm indicator.

c. Log Mode and YLog. These outputs are active when either the dBm, dB [REF], or dB (REL) Mode is selected. The Log Mode signal forms part of the address applied to the True-Range Decoder. The YLOG signal is gated with other inputs by the Up/Down Count Control Logic to control the direction in which the Main Counter counts when enabled by the Controller.

d. Mode Bits 1 and 2. Mode Bits 1 and 2 are coded as listed previously to indicate to the Remote Interface Circuits which operating mode is selected for the Power Meter. Additionally, the NM2 signal is also applied to the Display Assembly to light the dB (REL) indicator when the dB Relative Mode is selected.

8-98. When the front-panel SENSOR ZERO switch is pressed, the NZR input to the Auto-Zero Timer enables the Sensor Zero output to be activated for a period of approximatley four seconds. While this signal is active it overrides the Mode Select inputs to the Buffers and sets the IYM2 and the IYM1 outputs to 1 and 0, respectively. Thus if the Power Meter was not configured for Watts Mode operation when the SENSOR ZERO switch was pressed, Watts operation will be enabled at the start of the first program cycle after the Sensor Zero signal is activated. The Power Meter will then return to the operating mode selected by the Mode Select inputs at the start of the first program cycle following termination of the Sensor Zero signal. While the Sensor Zero signal is active, the remaining outputs of the Buffers are active and provide the following functions:

a. Sensor Auto-Zero Enable. This output is applied to the Auto-Zero circuits to close the feedback loop to the Power Sensor.

b. Sensor Auto-Zero Status. This output is applied to the Display Assembly to light the ZERO indicator.

CIRCUIT DESCRIPTIONS

Service Sheet 3 (cont'd)

c. RF Blanking. This output is available at a rear panel connector for suppression of an external instrument's RF output.

8-99. Range Selection. The Auto-Range Qualifier input is applied to the Controller in a "WIRED OR" configuration to enable local or remote control of this function (Remote Enable line high or low, respectively). When this input is low, the operating program is enabled to count the Range Counter up (LCRU instruction) or down (LCRD instruction) as required to obtain an in-range measurement. When the input is high, the operating program is inhibited from changing the range upon detection of an under-range or an over-range condition. Thus, for local operation a high Auto-Range Qualifier input causes the Power Meter to hold the last range previously selected in the Power Up Subroutine or during execution of the operating program. For remote operation, a high Auto-Range Qualifier input causes the Remote Range Select inputs to be loaded into the Range Counter at the start of each program cycle to select a specific range for each measurement.

8-100. In addition to checking the Auto-Range Qualifier at various points in the program cycle, the operating program also checks for an invalid range selection at the start of each cycle. When remote operation is selected, ranges 6 and 7 are considered invalid; when local operation is selected, range 0 is also considered invalid, Upon detection of an invalid range, the operating program generates LCRD instructions as required to count the Range Counter down to range 5.

8-101. A-D Converter Auto-Zero Function. The Controller and Main Counter operating cycle associated with auto-zeroing the A-D Converter is described in the following paragraphs.

a. The Controller first generates an LCLR instruction to set the output of the Main Counter to 0000 and to store a positive sign in the Sign Latch (YSPL high, NSPL low).

b. The Controller then generates LAZ and LCNT instructions on the trailing edge of every 01 Clock Pulse while monitoring the Count Qualifier outputs of the Main Counter. The LCNT instructions are processed by the Up/Down Count Control Logic as indicated in Table 8-7 to provide Up Clock outputs to the Main Counter. The LAZ instructions are clocked into the A-D Control Register by the HPLS 2 clock, thereby maintaining a continuous LAZO output to the A-D Converter.

c. When the Count Qualifier outputs equal a predetermined value stored in the operating program, the Controller terminates the LAZ and LCNT instructions and generates an LCLR instruction. The LCLR instruction returns the output of the Main Counter to 0000 and stores a positive sign in the Sign Latch (YSPL high; NSPL low). The absence of the LAZ instruction causes the HPLS 2 clock pulse to reset the LAZO output of the A-D Control Register, thereby terminating the Auto-Zero function.

8-102. A-D Converter Measurement Function. The Controller and the Main Counter operating cycle associated with the measurement function is the same as described before for the Auto-Zero Function except that an LINP instruction is generated in lieu of an LAZ instruction. The LINP instruction enables the LRIN output of the A-D Control Register. This output is then maintained for 33.32 mS (Main Counter is counted up to 2000) to allow the A-D ramp to charge to - 7 times the dc input volage.

8-103. A-D Converter Linear Conversion. An A-D converter linear conversion is enabled following the measurement function when the Power Meter is configured for WATT MODE operation. The Controller and Main Counter operating cycle associated with a linear conversion is described in the following paragraph.

a. The Controller checks the A-D Converter qualifier to ascertain whether it represents a positive or negative input power level. (A negative power level indicates a high noise condition at the input to the Power Sensor). If it represents a negative power level, an LPSC instruction is generated to load the True-Range Counter and Sign Preset inputs into the Main Counter and Sign Latch, respectively. For WATT MODE operation these inputs are such that the output of the Main Counter remains at 0000 and the output of the Sign Latch changes to indicate a negative sign.

Table 8-7. Up/Down Count Control Logic Steering

Function	Inputs to Up/Down Count Control Logic							Output	Notes
	LCNT	LREL	YLOG	YSPL	NSPL	YSPL-Ref	NSPL Ref		
A-D Converter Auto-Zeroing and DC Input Loading	Pulse	High	X	High	X	X	X	Up Clock	1
A-D Converter Linear Conversion	Pulse	X	Low	X	X	X	X	Up Clock	1
A-D Converter dB Conversion	Pulse Pulse	High High	High High	High Low:	X X	X X	X X	Up Clock Down Clock	1,2 1,2
Counter dB Rel Conversion	Pulse Pulse Pulse Pulse	Pulse Pulse Pulse Pulse	High High High High	High High Low Low	Low Low High High	High Low High Low	Low High Low High	Up Clock Down Clock Down Clock Up Clock	3 3 3 3

NOTES:

1. *X indicates don't care.*
2. *Main Counter is always preset to minimum threshold of range selected (–20.00 dBm, +10.00 dBm, etc.) and co un ted in direction of increasing power. Thus, if Sign Latch is preset positive, Main Counter is counted up; if Sign Latch is preset negative, Main Counter is counted down. If Main Counter is counted through 0000 Borrow output toggles Sign Latch thereby causing output and count direction to reverse.*
3. *The purpose of the dB Relative function is to indicate an input power level with respect to a reference value stored in the Reference Register. This function is effected as follows:*
   - *a. First the dB value of the RF input power level is acquired via an A-D conversion.*
   - *b. The reference number stored in the Reference Register is loaded into the Relative Counter*
   - *c. The Relative Counter is counted down to 0000.*
   - *d. The sign of the stored reference is compared with the sign of the RF input power level. If the signs are the same the Main Counter is counted down to "subtract" the reference value from the measured value; if the signs are not the same, the Main Counter is counted up to "add" the reference value to the measured value.*
   - *e. If the Main Counter is counted down through 0000, the Borrow output resets the Sign Latch and the count direction is reversed.*
   - *f. When the Relative Counter output is 0000, the Main Counter output indicates the measured value with respect to the stored reference.*

CIRCUIT DESCRIPTIONS

Service Sheet 3 (cont'd)

b. The Controller then monitors the count and A-D qualifier inputs while generating an LRMP instruction on the negative alternation of every 01 clock pulse and an LCNT instruction on the negative alternation of every other 01 clock pulse. The LCNT instructions are processed by the Up/Down Count Control Logic as indicated in Table 8-7 to provide up clock inputs to the Main Counter. The LRMP instructions are clocked into the A-D Control Register by the HPLS 2 clock, thereby providing a continuous Ramp Enable output to the A-D Control Gates, This signal is then gated with the outputs of the Sign Latch and the YLOG signal to provide a continuous LRP output when the sign of the input power level is positive, and a continuous LRM output when the sign of the input power level is negative.

c. The continuous LRP or LRM input causes the A-D ramp to be discharged at a constant rate. If the ramp discharges through threshold in less than 0100 counts, an under-range condition is detected. If the ramp does not reach threshold by 1200 counts, an over-range condition is detected. If the ramp reaches threshold between these two points in time, an in-range condition is detected.

8-104. A-D Converter Linear Under-Range Registration. Registration of a linear under-range conversion is described in the following paragraphs.

The LRMP instruction is disabled, causing the HPLS 2 clock to reset the LRP or LRM output of the A-D Control Register and gates. With this signal reset, the LRP or LRM output of the A-D Control Gates is disabled, thereby terminating the conversion.

b. The LCNT instruction is also terminated to "freeze" the number in the Main Counter.

c. An LCOR instruction is generated to reset the outputs of the Over/Under Range Decoder.

d. If the measurement was taken on range 1, and LTC instruction is generated to transfer the output of the Sign Latch to the Sign Display Indicator via the Display Sign Latch, to load the output of the Main Counter into the Display Registers, and to indicate to the Remote Interface Circuits that the measurement is completed.

e. If the measurement was taken on ranges 2 through 5 with Auto-Ranging disabled, an LSUR instruction is generated prior to the LTC instruction to enable the UR LED and HUR status outputs of the Over/Under Range Decoder. The UR LED output lights the front-panel UNDER RANGE indicator. The HUR output is gated with the HOR output by the Remote Interface Circuits to provide one of four possible status outputs to the Remote Interface Control Circuit.

f. If the measurement was taken on ranges two through five with Auto-Ranging enabled, an LTC instruction is not generated. Instead, an LSOR instruction is generated to enable the LBLANK output of the Over/Under Range Decoder and thus blank the front panel display. (An LCOR instruction resets all outputs of the Over/Under Range Decoder. An LSOR instruction enables the LBLANK, HOR, and OR LED outputs. An LSUR instruction enables the HUR and UR LED outputs and resets the OR LED output; it does not affect the LBLANK or HOR outputs. 'The Over/Under Range Decoder outputs are not processed by the Remote Interface Circuits until an LTC instruction is generated.) Following the LSOR instruction, and LCRD instruction is generated to count the Range Counter down one range, then another measurement is taken. This cycle is repeated until either an in range measurement is obtained, or the Range Counter is counted down to range 1. Registration of an in-range condition is accomplished the same as for a range 1 under-range condition.

8-105. A-D Converter Linear In-Range Registration. Registration of a linear in-range conversion is accomplished as previously described for an under-range, range 1 condition.

8-106. A-D Converter Linear Over-Range Registration. Registration of an over-range conversion is described in the following paragraphs.

a. The LRMP instruction is disabled, causing the HPLS 2 clock to reset the LRP or LRM output of the A-D Control Register and gates and thereby terminating the conversion.

b. The LCNT instruction is also terminated to "freeze" the number in the Main Counter.

Service Sheet 3 (cont'd)

c. An LCOR instruction is generated to reset the outputs of the Over/Under Range Decoder.

d. If the measurement was taken on ranges 5 or on ranges one through four with Auto-Ranging disabled, an LSOR instruction is generated to enable the OR LED, HOR, and LBLANK outputs of the Over/Under Range Decoder. The OR LED output lights the front-panel OVER RANGE indicator, the LBLANK output blanks the front-panel numeric display, and the HOR output is gated with the HUR output by the Remote Interface Circuits to provide one of four status outputs to the Remote Interface Controller. After the LSOR instruction is generated, an LTC instruction is generated to transfer the output of the Sign Latch to the front-panel Sign Display Indicator via the Display Sign Latch, to load the output of the Main Counter into the Display Registers, and to indicate to the Remote Interface Circuits that the measurement is completed. Since the LBLANK output is active at this time, only the most significant digit of the Main Counter output is displayed on the front-panel.

e. If the measurement was taken on ranges one through four with Auto-Ranging enabled, an LTC instruction is not generated after the LSOR instruction. Instead, an LCRU instruction is generated to count the Range Counter up one range, then another measurement is taken. This cycle is repeated until either an in-range measurement is obtained, or the Range Counter is counted up to range five.

8-107. A-D Converter Log Conversion. A log conversion is enabled following the measurement function when the Power Meter is configured for dBm, dB [REF], or dB (REL) Mode operation. The Controller and Main Counter operating cycle associated with this conversion is described in the following paragraphs.

NOTE

An LCLR instruction is generated following the measurement function to set the output of the Main Counter to 0000, and to store a positive sign in the Sign Latch.

a. The Controller generates an LPSC instruction to load the True-Range Counter and Sign Preset outputs of the True-Range Decoder into the Main Counter and Sign Latch, respectively. As stated on Service Sheet 2, these inputs correspond to the minimum threshold of the range selected. The threshold can be either a positive or negative number (-1000, +2000, etc.) and, for any given range, it is determined by the overall sensitivity of the Power Sensor in use.

b. The Controller checks the state of the A-D qualifier input to determine whether the dc input has caused the A-D ramp to exceed the value of the log threshold. (When the YLOG input to the A-D Control Gates is active, the LLGR output is enabled to select the log threshold whenever the A-D Converter is not being auto-zeroed.) If the A-D qualifier input is OV, indicating that the ramp has not charged through threshold, the Controller detects an under-range conversion. Registration of the under-range conversion is described below.

c. If the A-D qualifier is +5V, indicating that the ramp has charged through threshold, the Controller alternately monitors the count and A-D qualifier inputs while generating an LRMP instruction on the negative alternation of each 01 clock pulse and an LCNT instruction on the negative alternation of every other 01 clock pulse. The LCNT isntructions are processed by the Up/Down Count Control Logic as indicated in Table 8-7 to provide up or down clock outputs to the Main Counter. The LRMP instructions are clocked into the A-D Control Register by the HPLS 2 clock, thereby providing a continuous ramp enable output to the A-D Control Gates. Since the YLOG input to the A-D Control Gates is also active, the gates provide a continuous LRL output along with the LLGR output to enable the log conversion slope of the A-D ramp.

d. The continuous LRL output causes the A-D ramp to be discharged at an exponential rate. If the ramp discharges through threshold in less than 1100 counts, an in-range conversion is detected. If the ramp does not reach threshold by 1100 counts, an over-range conversion is detected. Registration of in-range and over-range conditions is covered in the following paragraphs.

8-108. A-D Converter Log Under-Range Registration. Registration of a log under-range conversion is described in the following paragraphs.

a. The Controller generates an LSUR instruction followed by an LSOR instruction to enable the UR LED, HUR, HOR, and LBLANK outputs of the Over/Under Range Decoder, The UR LED output lights the front-panel UNDER RANGE indicator and the LBLANK output blanks the front-panel display. The HUR and HOR outputs are gated together by the Remote Interface Circuits to provide one of four possible status outputs to the Remote Interface Controller.

b. If the measurement was taken on ranges 2 through 5 with Auto-Ranging enabled, and LCRD instruction is generated to count the Range Counter down one range, then another measurement is taken. This cycle is repeated until an in-range measurement is obtained or the Range Counter is counted down to range 1.

c. If the measurement was taken on range 1, or on ranges 1 through 5 with Auto-Ranging disabled, an LCRD instruction is not generated to count the Range Counter down. Instead, the Mode Qualifier Bits are checked to determine whether dBm, dB (REL), or dB [REF] operation is selected. If dBm operation is selected, an LTC instruction is generated to transfer the output of the Sign Latch to the front-panel Sign Indicator via the Display Sign Latch, to load the output of the Main Counter into the Display Registers, and to indicate to the Remote Interface Circuits that the measurement is completed. If dB (REL) operation is selected, an LCLR instruction is generated prior to the LTC instruction to set the output of the Main Counter to 0000. If dB [REF] operation is selected, an LLRE isntruction is generated after the LCLR instruction and before the LTC instruction to load the 0000 output of the Main Counter into the Reference Register, thereby clearing any reference value previously stored. (Refer to the paragraph dB (REL) Conversion.)

8-109. A-D Converter In-Range Registration. Registration of an in-range conversion is described in the following paragraphs.

The LRMP instruction is terminated, causing the HPLS 2 clock to reset the LRMP output of the A-D Control Register. With this signal reset, the LRL output of the A-D Control Gates is disabled, thereby terminating the conversion.

b. The LCNT instruction is also terminated to “freeze” the number in the Main Counter.

c. An LCOR instruction is generated to reset the outputs of the Under/Over Range Decoder.

d. The Mode Qualifier Bits are checked to determine whether dBm, dB (REL), or dB [REF] operation is selected. If dBm operation is selected, an LTC instruction is generated to transfer the output of the Sign Latch to the front-panel Sign Indicator via the Display Sign Latch, to load the output of the Main Counter into the Display Registers, and to indicate to the Remote Interface Circuits that the measurement is completed. If dB [REF] or dB (REL) operation is selected, a relative dB conversion is performed as described below before the LTC instruction is generated.

8-110. A-D Converter Log Over-Range Registration. Registration of an over-range conversion is described in the following paragraph.

a. The LRMP instruction is terminated, causing the HPLS 2 clock to reset the LRMP output of the A-D Control Register. With this signal reset, the LRL output of the A-D Control Gates is disabled, thereby terminating the conversion.

b. The LCNT instruction is also terminated to “freeze” the number in the Main Counter.

c. An LCOR instruction is generated to reset the outputs of the Over/Under Range Decoder.

d. If the measurement was taken on range 1 through 4 with Auto-Ranging enabled, an LCRU instruction is generated to count the Range Counter up one range, then another measurement is taken. This cycle is repeated until an in-range measurement is obtained or the Range Counter is counted up to range 5.

e. If the measurement was taken on range 5, or on ranges 1 through 4 with Auto-Ranging disabled, an LCRU instruction is not generated to count the Range Counter up. Instead, the Mode Qualifier Bits are checked to determine whether dBm, dB (REL) or dB [REF] operation is selected. If dBm operation is selected, an LTC instruction is generated to transfer the output of the Sign Latch

CIRCUIT DESCRIPTIONS

Service Sheet 3 (cont'd)

to the front-panel Sign Indicator via the Display Sign Latch, to load the output of the Main Counter into the Display Register, and to indicate to the Remote Interface Circuits that the measurement is completed. If dB (REL) operation is selected, an LCLR instruction is generated prior to the LTC instruction to set the output of the Main Counter to 0000. If dB [REF] operation is selected, an LLRE instruction is generated after the LCLR instruction and before the LTC instruction to load the 0000 output of the Main Counter into the Reference Register, thereby clearing any reference value previously stored. (Refer to paragraph dB (REL) Conversion.)

8-111. A-D Converter dB (REL) Conversion. A dB (REL) conversion is performed after an in-range log conversion when the Power Meter is configured for dB [REF] or dB (REL) Mode operation. The purpose of this conversion is to indicate the RF input power level with respect to a stored reference. The reference is selected by pressing the dB [REF] switch when the desired level is applied to the Power Meter. While the dB [REF] switch is pressed, the reference is updated during each program cycle. When the dB [REF] switch is released, the reference is "frozen" and the Power Meter is automatically configured for dB (REL) operation on the next program cycle. The Power Meter will then remain configured for dB (REL) operation until WATT or dBm MODE operation is subsequently selected.

8-112. When the Mode Qualifier Bits indicate that the dB [REF] mode is selected, an LLRE instruction is generated after an in-range log conversion to load the outputs of the Main Counter and the Sign Latch into the Reference Register. (Power Meter accuracy specifications apply to in-range measurements. If the dB [REF] mode is selected and an out-of-range log conversion is detected, an LCLR instruction is generated prior to the LLRE instruction to set the output of the Main Counter to 0000 and to store a positive sign in the Sign Latch. Thus, the Reference Register is effectively cleared to prevent an inaccurate reference from being used as the basis of future dB (REL) indications.) After the measured value is stored in the Reference Register, a dB (REL) conversion is enabled to indicate the measured value with respect to the stored reference. At the end of this conversion the output of the Main Counter will be 0000 because the measured value and the reference value were equal at the start of the conversion. The Controller then continues to enable one log and one dB [REF]/dB(REL) conversion per program cycle until the dB [REF] switch is released and the Mode Qualifier Bits change to indicate that the dB (REL) Mode is enabled. Following each dB [REF]/dB(REL) conversion, the outputs of the Main Counter (0000) are loaded into the front-panel Display Register by the LTC instruction.

8-113. When the dB [REF] switch is released, the new Mode Select Code is loaded into the Mode Register at the start of the next program cycle to enable the dB (REL) mode. For this mode an LLRE instruction is not generated after an in-range log conversion. Thus, the reference stored during the last program cycle is used for each dB relative conversion. The Controller and Main Counter operating cycle associated with the dB relative conversion is described in the following paragraphs.

a. An LCOR instruction is generated to load the output of the Reference Register into the Relative Counter and to set the Relative Counter = 0 (NRZ0) qualifier to logic one. When this qualifier subsequently changes state, the Controller will detect that the conversion is completed.

b. The Controller generates an LREL instruction to count the Relative Counter down one count. This is necessary because the Relative Counter has to be clocked one count past 0000 to change the state of the Relative Counter = 0 (NRZ0) qualifier.

c. The Controller monitors the Relative Counter = 0 qualifier (set to logic 1 by LCOR instruction) while generating LREL and LCNT instructions on the trailing edge of every negative alternation of the 01 clock pulse. The LREL instructions serve as down clocks to the Relative Counter and are gated with the LCNT instruction by the Up/Down Count Control Logic to provide up or down clock outputs to the Main Counter as indicated in Table 8-7. Note that up clocks are provided when the signs of the input and reference power levels are different and down clocks are provided when the signs are same. Note also that if the Main Counter is counted down through 0000, the Borrow output of the Main Counter toggles the

CIRCUIT DESCRIPTIONS

Service Sheet 3 (cont'd)

Sign Latch, causing the sign outputs and, thus, the direction of counting to change. As illustrated in the examples below, this counting technique comprises an algebraic subtraction with the input power level representing the minuend and the reference power level representing the subtrahend.

Input Power Level	+5.00 dB	+5.00 dB	+5.00 dB
Reference Level	+3.00 dB	+7.00 dB	-5.00 dB
Result	+2.00 dB	-2.00 dB	+10,00 dB
Input Power Level	-5.00 dB	-5.00 dB	-5.00 dB
Reference Level	-3.00 dB	-7.00 dB	+5.00 dB
Result	-2.00 dB	+2.00 dB	-10.00 dB

d. When the Relative Counter = 0 qualifier changes state, the Controller detects that the conversion is completed and terminates the LREL and LCNT instructions. At this point, the outputs of the Main Counter and the Sign Latch indicate the input power level with respect to the stored reference.

e. After terminating the LREL and LCNT instructions, the Controller generates an LTC instruction to transfer the output of the Sign Latch to the front-panel Sign Indicator via the Display Sign Latch, to load the output of the Main Counter into the Display Register, and to indicate to the Remote Interface Circuits that the measurement is completed.

8-114. Service Sheet 4

8-115. General. The Hewlett-Packard Interface Bus circuits (Option 022) add talker/listener capability to the Power Meter. When the listener function is selected, the Power Meter accepts programming inputs asynchronously to the operating program and stores the data so that it can be accessed during each program cycle. When the talker function is selected the Power Meter outputs measurement and status data in a bit-parallel, word-serial format during the display and remote talk subroutine.

8-116. The descriptions which follow assume a basic understanding of Hewlett-Packard Interface Bus (HP-IB) operation. For additional information covering HP-IB operation, refer to "Hewlett-Packard Interface Bus Users Guide" (HP Part No. 59300-90001 for HP 9820, and 59300-90002 for HP 9830) and "Condensed Description of the Hewlett-Packard Interface Bus" (HP Part No. 59401-90030).

8-117. Command Mode Operation.

8-118. The HP-IB circuits are placed in the command mode when the Remote Interface Controller sets the comand mode enable (ATN) line low. In this mode the HP-IB circuits will respond to a listen address, a talk address, an unlisten command, a universal device clear command, an interface clear (IFC) input, and a remote enable (REN) input.

8-119. Handshake Timing. When the HP-IB circuits are in the command mode, the LATN output of the Clock Generator is held low to disable the Function Decoder and to enable the Listen Transfer Control Gates. (The LATN input to the Listen Transfer Control Gates is OR'ed with the L Listen input so that the gates are also enabled when the bus is in the data mode and the Power Meter is addressed to listen.) While the Listen Transfer Control Gates are enabled, they function in conjunction with the Clock Generator to generate the NRFD and NDAC outputs necessary to complete each Remote Interface Controller initiated data transfer cycle. (When the gates are disabled, the NRFD and NDAC outputs are set high so that they will not interface with HP Interface Bus operation.) When the Remote Interface Controller has data available, it sets the DAV line low, thereby enabling the Clock Generator to set the Data Accept Clock low a short time later as shown in Figure 8-19. The Listen Transfer Control Gates, in turn, process the low Data Accept Clock to set the NRFD line low (Not Ready For Data) and the NDAC line high (Data Accepted). These outputs are then maintained until all instruments on the HP Interface Bus indicate that they have accepted the data. When this occurs, the Remote Interface Controller sets the DAV line high, thereby terminating the Data Accept Clock a short time later. With the Data Accept Clock terminated, the NRFD output of the Listen Transfer Control Gates is set high (ready for data) and the Data Accept line is reset low to enable the next data transfer initiated by the Remote Interface Controller.

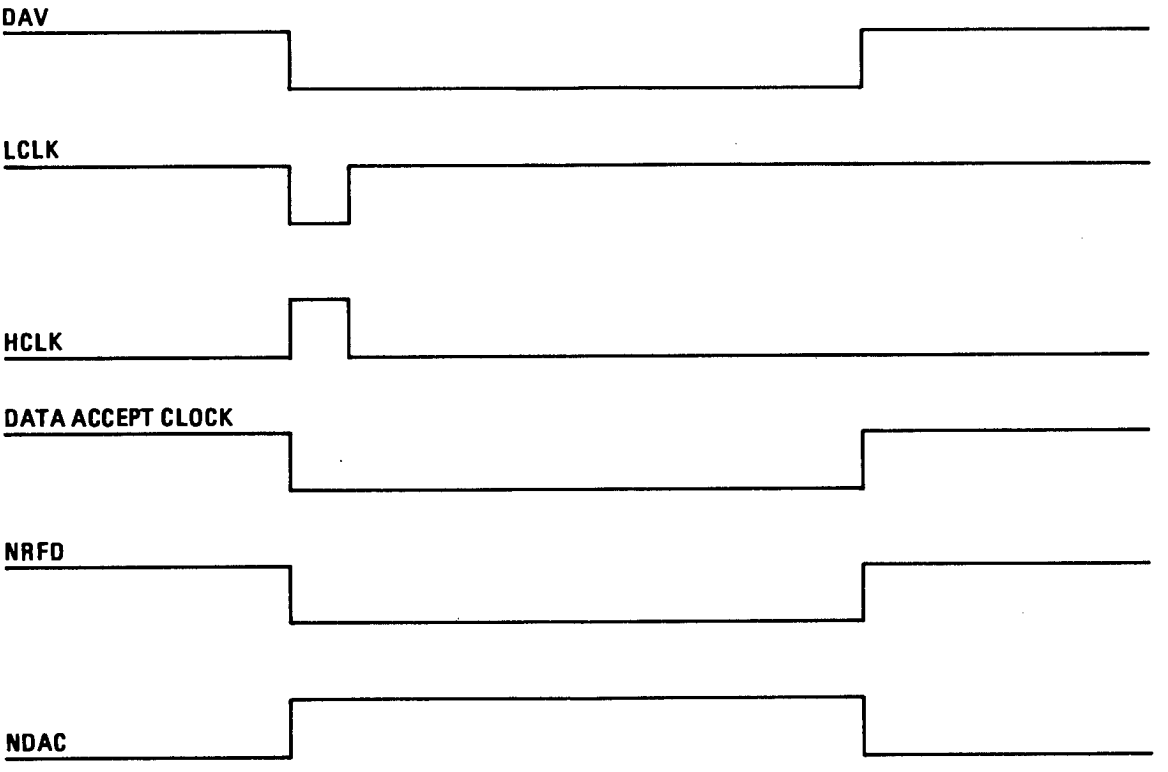

NOTES:

1. The HCLK output of the clock generator is enabled only during the commend mode; the LCLK and deta accept clocks are enabled in both the commend and deta modes.
2. The listen transfer control gates process the data accept clock to generate the NRFD and NOAC handshake signals in tha command mode and, when the Power Meter is addrassed to listen, in the data mode also. If the Power Meter is not addressed to Listen in the data mods, both signals are set high so that they do not affect HP-IB operation.

Figure 8-19. HP-IB Listen Handshake Timing

CIRCUIT DESCRIPTIONS

Service Sheet 4 (cont'd)

8-120. Talker and Listener Addressing. Factory installed jumpers select talk address "M" and listen address "-" for the Power Meter. (Instructions for reconnecting the jumpers to change the talk and listen addresses are provided in Section II, Installation.) In Table 2-2, it is shown that the binary code for both of these addresses is the same except for data bite 6 and 7. Thus, when either of these addresses is present on the data lines, the Address Decoder is enabled by data bits 1-5 and provides an Address Enabled output to the Listen and Talk Registers. Discrimination between the addresses is accomplished by the Talk Decoder and the Listen/Unlisten Decoder. For talk address "M", the Talk Decoder is enabled by data bits 6 and 7 and generates a Talk Clock output in response to the HCLK input. For listen address "-", the Listen/Unlisten Decoder is enabled by data bits 6 and 7 and generates a Listen Clock output in response to the HCLK input. (The data bits 1 through 5 inputs to the Listen/Unlisten Decoder enable it to produce an Unlisten output when the Remote Interface Controller generates a Universal Unlisten Command.)

8-121. Since the Talk or Listen Clock is generated while the Address enable signal is active, the associated register is clocked to the set state to enable the talk or listen function when the data bus is subsequently set to the data mode. Resetting of the register to terminate the function occurs when the Power Meter is unaddressed to talk or listen, or when the Remote Interface Controller activates the Interface Clear (IFC) line to clear the HP Interface Bus of all talkers and listeners.

8-122. The Power Meter can also be configured as a talker by setting the TALK ONLY/NORMAL switch to the TALK ONLY position. When the switch is in this position, the set input of the Talk Register is tied to ground to hold the register in the set state. Since there can only be one talker at a time on the HP Interface Bus, this function is normally selected only when there is no Remote Interface Controller connected to the system (e.g., when the Power Meter is interconnected with an HP 5150A Recorder) as the Power Meter has no provision for generating programming commands necessary to control the operation of other instruments on the HP Interface Bus.

8-123. Remote Enable. Remote operation of the Power Meter is enabled when the HREM and Remote Enable (LREM) outputs of the Remote Enable Logic are true (refer to Table 8-6 and to the Data Mode Programming paragraph). These outputs are provided by a gated flip-flop which is set only when the Listen Clock and Address Enable signals are active while the Remote Enable (REN) input is true (low). Thus, to select remote operation of the Power Meter, it is necessary to address the Power Meter to listen after the Remote Enable (REN) line is set true. The Remote Enable Logic will then remain set until the Remote Enable (REN) line is set false to terminate remote operation of all instruments on the HP Interface Bus.

NOTE

When the Power Meter is addressed to talk, it will output data after each measurement regardless of whether it is configured for local or remote operation. Refer to Figure 8-15, Sheet 14.

8-124. The remaining input to the Remote Enable Logic is the LPU signal generated by the Controller when the Power Meter is first turned on, and by the Device Clear Generator when a Device Clear Command is detected. This input is applied to the Remote Enable Logic in a "WIRED OR" configuration, and an RC network is used to discriminate between the signal sources. When the Power Meter is first turned on, the LPU output of the Controller is mainatined for approximately 500 ms, thereby allowing the RC network to discharge to OV and reset the Remote Enable Logic. When a Device Clear Command is detected, the LPU output of the Device Clear Generator is equal in width to the HCLK input and does not discharge the RC network. Thus, when the Power Meter is first turned on, it is automatically configured for local operation. If remote operation is subsequently selected, the Power Meter will remain configured for remote operation until the Remote Enable (REN) input is set false to terminate remote operation of all instruments on the HP Interface Bus.

8-125. Device Clear. When a Device Clear Code is placed on the HP-IB data lines, the Device Clear Generator is enabled and provides an LPU otuput in response to the HCLK input. As shown on the block diagram, this output is tied to the LPU

CIRCUIT DESCRIPTIONS

Service Sheet 4 (cont'd)

output of the Controller in a "WIRED-OR" configuration. The pulse width of the Device Clear Decoder output, however, is much narrower than the Controller LPU output so it does not discharge the RC networks installed at the inputs to the Reset Generator and the Remote Enable Logic. Thus, the function of the Device Clear Decoder LPU output is limited to reinitializing the operating program to starting address 000_8 (refer to Table 8-6) and to selecting a predetermined operating mode and range for the Power Meter when remote operation is enabled (refer to the Data Mode Programming paragraph).

8-126. Interface Clear. When the Interface Clear (IFC) input is true (low) the Reset Generator is enabled and provides a Reset output to the Talk and Listen Registers. Thus if the Power Meter was addressed to talk or listen previously, the talk or listen function is cleared. Similarly, when power is first turned onto the Power Meter, the pulse width of the Controller LPU output is of sufficient duration to discharge the Reset Generator RC network and thereby cause a Reset output to be applied to the Talk and Listen Registers.

8-127. Talker Unaddressing. When the TALK ONLY/NORMAL switch is set to the NORMAL position, the Remote Interface Controller can unaddress the Power Meter to talk by setting the Interface Clear (IFC) line true (refer to previous description), by addressing some other instrument on the HP Interface Bus to talk, or by generating a Universal Untalk Command. In Table 2-2, it is shown that data bits 6 and 7 are coded the same for all valid HP-IB talk addresses and for the Universal Unlisten Command. When any of these codes are placed on the HP-IB data lines, the Talk Decoder is enabled and provides a Talk Clock output in response to the HCLK input. For any address but that selected by the factory installed jumpers, however, data bits 1 through 5 are coded such that the Address Decoder is disabled. Thus, the absence of the Address Enable signal causes the Talk Register to be clocked to the reset state by the Talk Clock.

8-128. Listener Unaddressing. The Remote Interface Controller can unaddress the Power Meter to listen by setting the Interface Clear (IFC) line true (refer to previous description), or by generating a Universal Unlisten Command. The Universal Unlisten Command is coded such that data bits 1 through 5 disable the Address Decoder' and enable the Unlisten output of the Listen/Unlisten Decoder. Data bits 6 and 7 are coded the same as for any valid HP-IB listen address, so they enable the Listen/Unlisten Decoder to also provide a Listen Clock output in response to the HCLK input. With the Unlisten Signal Active and the Address Enable Signal Inactive, the Listen Register is clocked to the reset state by the Listen Clock.

8-129. The method of unaddressing the Power Meter to listen described previously prevents the Power Meter from being unaddressed to listen when other instruments on the HP-IB are designated as listeners. (There can only be one talker on the HP-IB at a time, but there can be up to five listeners.) If any other listen address than that assigned to the Power Meter is placed on the HP-IB, data bits 1 through 5 disable both the Address Decoder and the Unlisten output of the Listen/Unlisten Decoder. Thus, even though data bits 6 and 7 enable the Listen Clock output of the Listen/Unlisten decoder, the absence of the Address Enable and Unlisten inputs inhibits the Listen Register from changing state.

8-130. Data Mode Operation.

8-131. The HP-IB circuits are placed in the data mode when the Remote Interface Controller sets the Command Mode Enable (ATN) line to high. In this mode, the HP-IB circuits can function either as a talker or a listener. If remote operation of the Power Meter is enabled and the circuits were previously addressed to listen, they accept and decode programming inputs received over the HP-IB and store the data to control Power Meter operation. If remote operation of the Power Meter is enabled and the circuits were previously addressed to talk, they provide measurement and status outputs in a bit-parallel, word-serial format during the operating program Display and Remote Talk Subroutine.

8-132. Listen Handshake Timing. When the HP-IB is in the data mode and the HP-IB circuits are addressed to listen, the handshake timing outputs necessary to complete each Remote Interface Controller-initiated data transfer cycle are generated as described above for the command mode.

CIRCUIT DESCRIPTIONS

Data Mode Operation (cont'd)

8-133. General Programming Command Decoding. When the HP-IB is in the data mode and the Power Meter is addressed to listen, the high LATN and H Listen signals enable the Function Decoder. The Function Decoder then processes the data bit 4 through 7 inputs each time that the LCLK is generated to indicate that valid data is present on the HP-IB. In Table 2-2 it is shown that either data bit 6 or 7 is true (OV) for each of the programming codes assigned to the Power Meter. With either of these data bit inputs low for the conditions described (LATN - high, LCLK - low, H Listen - high), the Function Decoder is gated on and decodes the HI04, HI05, and HI06. inputs to generate a Clock output which enables the appropriate logic circuit to respond to the programming command. The specific Clock output generated for each programming command is listed in Table 8-8, and the resulting logic circuit operation is summarized in Table 8-9.

8-134. When the HP-IB is not in the data mode, the Function Decoder is disabled by the low LATN input. Similarly, when the Power Meter is not addressed to listen, the low H Listen input disables the Function Decoder. While the Function Decoder is disabled, it does not respond to the data bit inputs and so no Clock outputs are provided to the Programming Command Logic Circuits. Thus, the Programming Command Logic Circuits are inhibited from responding to any data inputs except programming commands specifically intended for the Power Meter.

8-135. Mode Programming Command Processing. The Mode Clock output of the Function Decoder resets the Auto Zero Enable Logic and clocks the LI01 and HI02 data bit inputs into the flip-flops in the Mode Select Logic. The outputs of the flip-flops are then gated with the HREM input to select the operating mode for the Power Meter when remote operation is enabled (HREM-high) and to allow front-panel "WIRED OR" selection of this function when local operation is enabled (refer to Service Sheet 3, Block Diagram Description, Mode Selection).

8-136. After a Mode Programming Command is loaded into the Mode Select Logic flip-flops, the flip-flops are inhibited from changing state until a new Mode Programming Command or an LPU input is received. When a new Mode Programming Command is received, the outputs of the flip-flops change to reflect the new mode encoded in the command. When an LPU input is received, the flip-flops are reset to select WATT Mode operation of the Power Meter.

8-137. Range Programming Command Processing. The Range Clock output of the Function Decoder resets the Auto-Range Qualifier output of the Range Select Logic to disable Auto-Ranging, and also clocks the HI01, LI02, and LI03 data bit inputs into flip-flops in the Range Select Logic. The inverted outputs of the flip-flop are then continuously applied to the Controller as YRR1, YRR2, and YRR3 Range Select inputs. Since the Auto-Range Qualifier is reset, the Controller loads these inputs into the Range Counter at the start of each program cycle (when remote operation is enabled) to select the operating range for the Power Meter.

8-138. After a Range Select Command is loaded into the Range Select Logic flip-flops, the flip-flops are inhibited from changing state until a new Range Programming Command or an LPU input is received. When a new Range Programming Command is received, the outputs of the flip-flops change to reflect the new range encoded in the command. When an LPU input is received, the Range flip-flops are reset and the Auto-Range flip-flop is reset to select Auto-Ranging when remote operation of the Power Meter is enabled (refer to the paragraph on Auto-Range Programming Command Processing).

8-139. Auto-Range Programming Command Processing. The LPU input and the Auto-Range Enable output of the Function Decoder set a flip-flop in the Range Select Logic. The output of the flip-flop is then gated with the HREM input to select Auto-Ranging when remote operation is enabled (HREM-high) and to allow front-panel "WIRED OR" range control of this function when local operation is enabled. (When remote operation is enabled and the Auto-Range Qualifier is true, the Range Select outputs are not loaded into the Range Counter at the start of each program cycle. Instead, the Range Counter is counted up or down during each cycle as required to obtain an in-range measurement.) Resetting of the Auto-Range flip-flop occurs when the Function Decoder provides a Range Clock output (refer to previous description).

Table 8-8. Function Decoder Clock Selection

PROGRAMMING COMMAND	DATA BIT CODING			CLOCK SELECTED
	NI04	HI05	HI06	
Range (1, 2, 3,4, 5)	L	H	H	Range clock
Auto Range Select (9)	H	H	H	Auto Range Clock
Mode (A, B, C, D)	L	L	L	Mode Clock
Sensor Auto Zero Enable (Z)	H	H	C	Auto Zero Clock
Cal Factor Enable/Disable (+/-)	H	L	H	Cal Factor
Measurement Rate (H, I)	H	L	L	Rate Clock 1
Measurement Rate (R, T, V)	L	H	L	Rate Clock 2

Table 8-9. Programming Command Logic Operating Summary (1 of 2)

PROGRAMMING COMMAND	DATA BIT CODING						LOGIC CIRCUIT OUTPUT
	LI01	HI01	LI02	HI02	LI03	HI04	
Range 1	X	H	H	X	H	X	YRR1 - high; YRR2 and YRR3 - low
Range 2	X	L	L	X	H	X	YRR2 - high; YRR1 and YRR3 - low
Range 3	X	H	L	X	H	X	YRR1 and YRR2 - high; YRR3 - low
Range 4	X	L	H	X	L	X	YRR3 - high; YRR1 and YRR2 - low
Range 5	X	H	H	X	L	X	YRR1 and YRR3 - high; YRR2 - low
Auto-Range Select (9)	X	X	X	X	X	X	Auto-Range qualifier set true (low) by Auto-Range Clock output of Function Decoder
Watt Mode (A)	L	X	X	L	X	X	IYM1 - low; IYM2 - high
dB Rel Mode (B)	H	X	X	H	X	X	IYM1 - high; IYM2 - low
dB Ref Mode (C)	L	X	X	H	X	X	IYM1 - low; 1YM2 - low
dBm Mode (D)	H	X	X	L	X	X	IYM1 - high; IYM2 - high
Sensor Auto Zero Enable (Z)	X	X	X	X	X	X	Auto-Zero Enable (NZR) output set true (low) by Auto-Zero Clock output of Function Decoder
Cal Factor Disable (+)	X	X	X	X	H	X	Cal Factor Disable - high
Cal Factor Enable (-)	X	X	X	X	L	X	Cal Factor Disable - open collector (≈ −15V)

NOTE: X Indicates Don't Care

Table 8-9. Programming Command Logic Operating Summary (2 of 2)

PROGRAMMING COMMAND	DATA BIT CODING						LOGIC CIRCUIT OUTPUT
	LI01	HIO1	LI02	HI02	LI03	HI04	
Hold (H)	H	X	X	L	H	H	LRUN and LSLOW - high
Trigger with setting time (T)	H	X	X	L	L	L	LRUN - set low by programming command; reset by LTC instruction generated as start of display and remote talk subroutine LSLOW - low
Trigger immediate (I)	L	X	X	L	H	H	LRUN - set low by programming command; reset by LTC instruction generated at start of display and remote talk subroutine
Free run at maximum rate (R)	H	X	X	H	H	L	LRUN - low; LSLOW - high
Free run with settling time (V)	H	X	X	H	L	L	LRUN - low; LSLOW - low
NOTE: X Indicates Don't Care.							

CIRCUIT DESCRIPTIONS

Data Mode Operation (cont'd)

8-140. sensor Auto-Zero Programming Command Processing. The Auto-Zero Clock output of the Function Decoder sets a flip-flop in the Auto Zero Enable Logic. The output of the flip-flop is then gated with the HREM input to select Sensor Auto-Zeroing when remote operation is enabled (refer to Service Sheet 3, Block Diagram Description, Mode Selection), and to allow front-panel "WIRED OR" control of this function when local operation is enabled. Resetting of the flip-flop occurs when the Function Decoder provides a Mode Clock output (refer to previous description) or when the Controller or the Device Clear Decoder generates an LPU output.

8-141. Cal Factor Programming Command Processing. The Auto-Zero Clock output of the Function Decoder clocks the LI03 data bit input into a flip-flop in the Cal Factor Disable Logic. The output of the flip-flop is then gated with the HREM input. When the HREM input is low, indicating that local operation is enabled, the Cal Factor Disable line is set false to enable the CAL FACTOR % switch (refer to Service Sheet 2). When the HREM input is high, indicating that remote operation is enabled, the state of the stored LI03 bit controls the Cal Factor Disable output. For a Cal Factor Enable (-) Programming Command, the stored bit is low and sets the Cal Factor Disable output false to enable the front-panel CAL FACTOR % switch. For a Cal Factor Disable (+) Programming Command, the stored bit is high and sets the Cal Factor Disable output true to disable the CAL FACTOR % switch. Disabling the switch is the same as setting it to the 100% position.

8-142. After a Cal Factor Programming Command is loaded into the Cal Factor Disable Logic flip-flop, the flip-flop is inhibited from changing state until a new Cal Factor Programming Command or an LPU input is received. When a new Cal Factor Programming Command is received, the flip-flop changes state to reflect the new state of the LI03 data bit. When an LPU input is received, the flip-flop is preset to set the Cal Factor Disable output true, disabling the front-panel switch,

8-143. Measurement Rate Programming Command Processing. The Rate Clock 1 and 2 outputs of the Function Decoder are ORed together so that either clock causes the Measurement Rate Select Logic to process the LI01, HI02, LI03, and HI04 data bit inputs. The LI03 bit selects the measurement rate

Data Mode Operation (cont'd)

(delayed or immediate) and the remaining three bits select hold, triggered, or free-run operation of the Power Meter.

8-144. The LI03 bit is processed separately from the remaining data bit inputs to the Measurement Rate Select Logic. When the Function Generator provides a Rate Clock output, this bit is clocked into a flip-flop. If the LI03 bit is high, the flip-flop is clocked to the set state to select delayed measurements; if the LI03 bit is low, the flip-flop is clocked to the reset state to select immediate measurements. The output of the flip-flop is then continuously applied to the Remote Qualifier Multiplexer so that it can be accessed by the operating program. This output is then maintained until either a new Measurement Rate Programming Command or an LPU input is received. When a new Measurement Rate Programming Command is received, the output of the flip-flop changes to reflect the current state of the LI03 data bit. When an LPU input is received, the flip-flop is reset along with the Hold and Trigger flip-flops and the Power Meter is placed in a hold condition.

8-145. The LI02, HI02, and HI04 data bit inputs are processed together to select hold, free run, or triggered operation of the Power Meter. When the Function Decoder provides a Rate Clock output, the HI02 bit is clocked directly into a flip-flop and the LI01 and HI04 bits are NANDed together with the resultant output clocked into a second flip--flop. For purposes of definition, the flip-flop which accepts the HI02 bit is called the Hold Flip-Flop, and the flip-flop which accepts the gated input is called the Trigger Flip-Flop. When the HI02 bit is high, the Hold Flip-Flop is clocked to the set state to enable free run operation of the Power Meter. When the HI02 bit is low, the Hold Flip-Flop is clocked to the reset state to enable hold or triggered operation of the Power Meter. The way this is accomplished is by ORing the outputs of the Hold and Trigger Flip-Flops. When the Hold Flip-Flop is set, the OR gate is continuously enabled and provides a low H HOLD output to the Remote Multiplexer. When the Hold Flip-Flop is reset, the state of the Trigger Flip-Flop controls the H HOLD output of the OR gate. Operation of the Trigger Flip-Flop for a Hold or Triggered Measurement Programming Command is described in the following paragraphs.

a. When both the LI01 and HI04 data bits are high for a Hold Programming Command, the Trigger Flip-Flop is reset by the Rate Clock output of the Function Decoder. Since the Hold Flip-Flop is also reset, the OR gate is disabled and a high H HOLD output is provided to the Remote Multiplexer to inhibit the Power Meter from taking measurements (see Figure 8-15, Sheets 4 and 14).

b. When either the LI01 or HI04 data bit is low for a Triggered Measurement Programming Command, the Trigger Flip-Flop is set by the Rate Clock output of the Function Decoder, then reset by the LTC instruction generated at the start of the operating program Display and Remote Talk Subroutine. While the Flip-Flop is set, the OR gate is enabled and provides a low H HOLD output to the Remote Multiplexer to initiate a Power Meter measurement. After the measurement is completed and the flip-flop is reset, the OR gate is disabled by the low outputs of the Hold and Trigger Flip-Flops. Thus, the gate provides a high H HOLD output to inhibit further measurements until a Free Run or Triggered Measurement Programming Command is received.

8-146. The output of the Trigger Flip-Flop is also gated with the LTLK output of the Talk Register to provide a Talk Qualifier (HTLK; 032_8) input to the Remote Multiplexer. When the Power Meter is not addressed to Talk, the LTLK signal is high and a low HTLK input is applied to the Remote Multiplexer to inhibit the operating program from initiating an Output Data Transfer. When the Power Meter is addressed to Talk, the LTLK input is low and the HTLK output of the gate is controlled by the Trigger Flip-Flop as described in the following paragraphs.

a. When the Trigger Flip-Flop is reset by a Hold Programming Command, a continuously high HTLK qualifier is applied to the Remote Multiplexer to enable the operating program to initiate an Output Data Transfer after completing the measurement in progress (refer to Figure 8-15, Sheet 14). Following the Output Data Transfer, the operating program then detects the hold condition in the Local/Remote Branch Subroutine (H HOLD high) and enters an idle state while awaiting a Free-Run or Triggered Measurement Programming Command to initiate the next measurement.

b. When the Trigger Flip-Flop is set by a Free-Run or Triggered Measurement Programming

CIRCUIT DESCRIPTIONS

Data Mode Operation (cont'd)

Command, a low HTLK qualifier is applied to the Remote Multiplexer until the flip-flop is reset by the LTC instruction generated at the start of the Display and Remote Talk Subroutine. Since this instruction is generated before the operating program checks whether Remote Talk is enabled, the resulting HTLK qualifier enables the operating program to initiate an Output Data Transfer during the Display and Remote Talk Subroutine. If the Trigger Flip-Flop was set by a Free-Run Programming Command, the H HOLD qualifier will be low and the operating program will continue to take measurements and output data after each measurement until a new Measurement Rate Programming Command is received or the Power Meter is ufaddressed to talk. If the Trigger Flip-Flop was set by a Triggered Measurement Programming Command, the H HOLD qualifier will be high after the LTC instruction and the operating program will enter an idle state during the Local/Remote Branch Subroutine while awaiting a Free-Run or Triggered Measurement Programming Command to initiate the next measurement. The reason that an Output Data Transfer is synced to the LTC instruction for a Triggered Measurement Programming Command is to ensure that valid measurement is taken before the Power Meter outputs data after being addressed to Talk.

8-147. The remaining input to the Hold and Trigger Flip-Flops is the LPU output of the Controller and the Device Clear Decoder. When this input is active, both registers are reset and a high H HOLD qualifier is applied to the Remote Multiplexer to place the Power Meter in a hold condition.

8-148. Remote Qualifier/Program Interface. When remote operation is enabled, each of the qualifier inputs to the Remote Qualifier Multiplexer is accessed at some point in the operating program cycle. The purpose and function of each qualifier is provided in Table 8-2, along with a listing of the subroutines in which the qualifier is accessed. The manner in which the qualifier is accessed by the operating program is covered on Service Sheet 3, Block Diagram Description.

NOTE

The Remote Qualifier Multiplexer inverts the qualifier inputs. Thus, a "true" qualifier input will be in the opposite state to that shown on the Operating Program Flow Chart.

8-149. Talk Cycle. During the Display and Remote Talk Subroutine of each program cycle, the operating program checks whether the Power Meter is addressed to Talk. If the Power Meter is addressed to Talk, the LTLK input to the Remote Qualifier Multiplexer will be low and an Output Data Transfer will be enabled as shown on Sheet 14 of Figure 8-15. Operation of the HP-IB circuits when the Power Meter is addiessed to talk is described in the following paragraphs.

a. Talk Transfer Control Gates. The Talk Transfer Control Gates are enabled by the low LTLK and HATN inputs when the Power Meter is addressed to Talk and the HP-IB is in the data mode. While the gates are enabled, they provide high HOE 1 and high HOE 2 outputs to enable the Data Valid Status Generator and the Output Gates.

NOTE

As shown on Sheet 14 of Figure 8-15, the operating program will initiate an Output Data Transfer whenever the LTLK qualifier is low. If the HP-IB is not in the data mode, however, the Talk Transfer Control Gates will be disabled by the high HATN input and the resulting low HOE 2 output will set the HRFD qualifier output of the Data Valid Status Generator low. Similarly, if there is no listener on the HP-IB, the low NRFD input also sets the HRFD qualifier low. With this qualifier low, the operating program will enter a hold loop until the Power Meter is unaddressed to Talk.

b. Data Valid Status Generator. The Data Valid Status Generator functions in conjunction with the operating program to generate the timing signals necessary to complete a Power Meter initiated data transfer. A timing diagram of Data Valid Status Generator operation is provided in Figure 8-20. As shown in the figure, the JK flip-flop is initially reset by the LPU input and cannot change state until the Power Meter is addressed to Talk and all listeners on the HP-IB indicate that they are ready to accept data. When this occurs, both the

Data Mode Operation (cont'd)

HOE 2 and the NRFD inputs will be high and the Data Valid Status Generator will provide a high HRFDq qualifier input to the Remote Multiplexer. If the HP-IB is connected properly, the HDACq qualifier will be low at this time and the operating program will generate an LSDAV instruction to set the JK flip-flop.

NOTE

The HRFDq and the HDACq qualifier outputs of the Data Valid Status Generator are delayed slightly to allow settling time for the HP-IB listeners.

When the JK flip-flop is set, the combination of the high HIDAV and HOE 2 signals cause the output gates to set the DAV line low, thereby indicating that valid data is available on the HP-IB. (Word Counter, ROM, and Output Gate operation is described in the following paragraph.) After all of the listeners on the HP-IB accept the data, the DAC input to the Data Valid Status Generator goes high, causing the Status Generator to provide a high HDACq qualifier output to the Remote Qualifier Multiplexer. The operating program, in turn, detects the change in state of the HDACq qualifier and generates a second LSDAV instruction to reset the JK flip-flop. The low HIDAV output then disables the DAV output of the Output Gates and the negative-to-positive transition of the LIDAV signal clocks the Word Counter to the next ROM address. As shown on Sheet 14 of Figure 8-15 this cycle is then repeated until all 14 of the output data words are sent over the HP-IB. Note that the JK flip-flop is reset after each word is transferred. Thus, the JK flip-flop will be reset by the last LSDAV instruction of the Output Data Transfer and will remain reset until the operating program initiates the next Output Data Transfer.

8-150. Word Counter, ROM, Line Selector, Multiplexer Gate, and Output Gate Operation. All of these circuits function together to sequentially output data words 0 through 13 each time that the operating program enables an Output Data Transfer during the Display and Remote Talk Subroutine. Each word consists of seven data bits which are ASCII coded to select a status character as indicated in Table 8-10. Coding of data bits 7, 6, and 5 is accomplished by buffering the Y6, Y5, and Y4 outputs of the ROM. Coding of the remaining data bits is controlled by the Y7 output of the ROM. When this bit is low, the Line Selectors are enabled and they route the status inputs selected by the YO through Y 3 outputs of the ROM to the Output Gates. When the Y7 bit is high, the Line Selectors are disabled and the YO through Y3 outputs of the ROM are buffered by the Multiplexer Gates to select the coding for data bits 1 through 4.

8-151. The output of the ROM, in turn, is selected by the address input from the Word Counter. This address is set to 0 at the start of each program cycle by the HLLD reset input to the Word Counter. While the ROM is at address 0, its output causes the Line Selectors to route the HOR, HUR, and YM3 status inputs to the Output Gates to form a Word 0 ASCII character as indicated in Table 8-10.

8-152. When the Power Meter is addressed to Talk, the Output Gates are enabled by the high HOE 1 and HOE 2 inputs and continually route data to the HP-IB. The HP-IB does not accept the data, however, until the Data Valid Status Generator provides a high HIDAV output to set the Data Valid (DAV) output true. When this occurs, each of the listeners accept the data and set the DAC line high to complete the data word transfer.

8-153. After all of the listeners have accepted the data, the Word Counter is clocked to the next address on the positive-going edge of the LIDAV output of the Data Valid Status Generator. For addresses 0 through 13 either the Y0 or the Y7 output of the ROM is high, so a low HMDT qualifier is applied to the Remote Multiplexer to enable each word to be sequentially transferred over the HP-IB. After word 13 is transferred, both the Y0 and Y7 outputs of the ROM go low and a high HMDT qualifier is applied to the Remote Multiplexer to terminate the data transfer cycle. The HMDT qualifier is then held high until the Word Counter is reset to 0 by the HHLD instruction generated at the start of the next program cycle.

8-154. The remaining address input to the ROM is the LQT signal. When this input is low, the outputs of the Word Counter select ROM addresses 008 through 158; when this input is high, the outputs of the Word Counter select ROM addresses 208

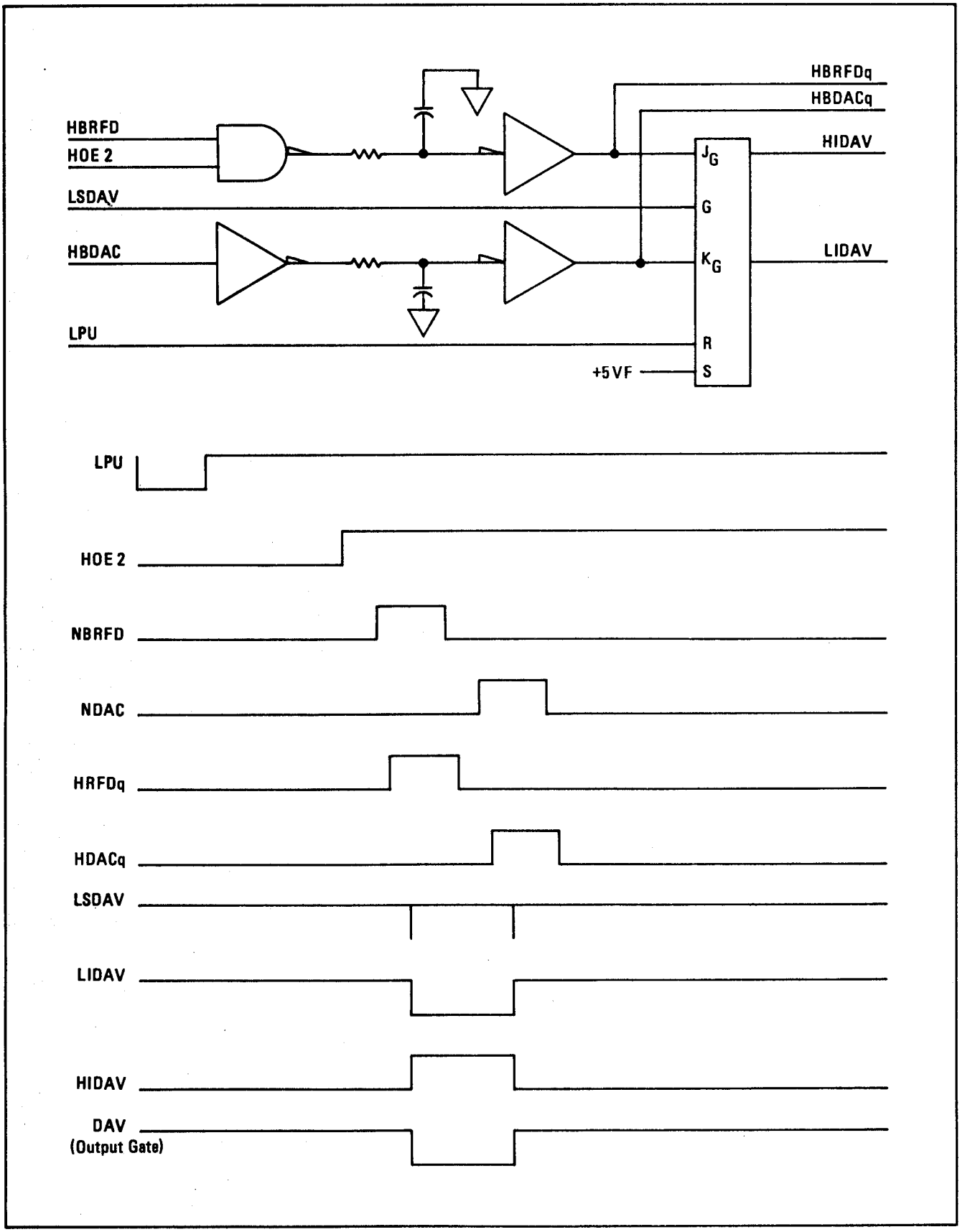

Figure 8-20. Data Valid Status Generator Timing

Table 8-10. Power Meter Talk HP-IB Output Data Format (1 of 3)

Word	Character	ROM Output – Y								Data Output - LDI0							Notes
		7	6	5	4	3	2	1	0	7	6	5	4	3	2	1	
0 Status	P (In-Range)	L	H	L	H	L	L	L	H	L	H	L	H	H	H	H	1. ROM address 20_8. 2. Data output selected by HOR, HUR, & YM3 inputs to Line Selectors.
	Q (Under Range, Watts)									L	H	L	H	H	H	L	
	R (Over Range)									L	H	L	H	H	L	H	
	S (Under Range, Log)									L	H	L	H	H	L	L	
	T (Auto Zeroing, Range 1)									L	H	L	H	L	H	H	
	U (Auto Zeroing, Not Range 1)									L	H	L	H	L	H	L	
1 Range	I (Range 1)	L	H	L	L	L	L	H	H	L	H	H	L	H	H	L	1. ROM address 01_8 or 21_8. 2. Data output selected by YR1, YR2, & YR3 inputs to Line Selectors.
	J (Range 2)									L	H	H	L	H	L	H	
	K (Range 3)									L	H	H	L	H	L	L	
	L (Range 4)									L	H	H	L	L	H	H	
	M (Range 5)									L	H	H	L	L	H	L	
2 Mode	A (Watt)	L	H	L	L	L	H	L	H	L	H	H	H	H	H	L	1. ROM address 022_8. 2. Data output selected by NM1 and NM2 inputs to Line Selectors
	B (dB Rel)									L	H	H	H	H	L	H	
	C (dB Ref)									L	H	H	H	H	L	L	
	D (dBm)									L	H	H	H	L	H	H	
3 Sign	SP (plus)	H	L	H	L	H	H	H	H	H	L	H	L	H	L	L	1. ROM address 23_8. 2. Data output se-selected by ROM.
	- (minus)	H	L	H	L	L	L	H	L	H	L	H	L	L	H	L	1. ROM address 03_8. Data output selected by ROM
4 YK Digit	0	L	L	H	H	L	H	H	H	H	L	L	H	H	H	H	1. ROM address 24_8. (cont'd)
	1									H	L	L	H	H	H	L	

Table 8-10. Power Meter Talk HP-IB Output Data Format (2 of 3)

Word	Charactar	ROM Output - Y								Data Output - LDIO							Notes
		7	6	5	4	3	2	1	0	7	6	5	4	3	2	1	
4 YK Digit cent'd)	2									H	L	L	H	H	L	H	2. Data output selected by YK1-YK4 inputs to Line Selectors.
	3									H	L	L	H	H	L	L	
	4									H	L	L	H	L	H	H	
	5									H	L	L	H	L	H	L	
	6									H	L	L	H	L	L	H	
	7									H	L	L	H	L	L	L	
	8									H	L	L	L	H	H	H	
	9									H	L	L	T	H	H	L	
5 YH Digit	0 – 9	L	L	H	H	H	L	L	H								1. ROM address 05_8 or 25_8. 2. Data output selected by YH1-YH4 inputs to Line Selectors.
6 YD Digit	0 – 9	L	L	H	H	H	L	H	H								1. ROM address 0268. 2. Data output selected by YD1-YD4 inputs to Line Selectors.
7 YU Digit	0 – 9	L	L	H	H	H	H	L	H								1. ROM address 078 or 278. 2. Data output selected by YU1-YU4 inputs to Line Selectors
8 Exponent	E	H	H	L	L	H	L	H	L	L	H	H	H	L	H	L	1. ROM address 10_8 or 30_8. 2. Data output selected by ROM.
9	– (E "–")	H	L	H	L	L	L	H	L	H	L	H	H	H	L	H	1. ROM address 11_8 or 31_8. 2. Data output selected by ROM.
										L	H	H	H	L	H	L	
10 4 Digit	E– "0" X	H	L	H	H	H	H	H	H	H	L	L	H	H	H	H	1. ROM address 12_8. 2. Data output selected by ROM.
	E- "1" X	H	L	H	H	H	H	H	L	H	L	L	H	H	H	L	1. ROM address 32_8. 2. Data output selected by ROM.

Table 8-10. Power Meter Talk HP-IB Output Data Format (3 of 3)

Word	Character	ROM Output – Y								Data Output - LDIO							Notes
		7	6	5	4	3	2	1	0	7	6	5	4	3	2	1	
11 HEX 1-3 Digit	**0-9** (E-X"X")	L	L	H	H	H	H	H	H								1. ROM address 13_8 Or 33_8 2. Data output selected by HEXO-HEX3 inputs to Line Selectors
12	"CR" (Carriage Return)	H	L	L	L	L	L	H	L	H	H	H	L	L	H	L	1. ROM address 14_8 Or 34_8. 2. Data output selected by ROM.
13	"LF" (Line Feed)	H	L	L	L	L	H	L	H	H	H	H	L	H	L	H	1. ROM address 15_8 Or 35_8.

CIRCUIT DESCRIPTIONS

Data Mode Operation (cont'd)

through 35_8. For all words except 3 and 10, the ROM is programmed redundantly to provide the same outputs for either a OX or 2X address input (refer to Table 8-10). For Word 3, the ROM outputs an ASCII space code when the LQT input is set high by a low NSPL input (positive sign) and an ASCII minus sign code when the LQT input is set low by a high NSPL input (negative sign). For Word 10, the ROM provides an ASCII one code when the LQT input is set low by a high HEX 4 input and an ASCII zero code when the LQT input is set high by a low HEX 4 input.

8-155. SERVICE SHEET 5

8-156. General. The BCD Interface Circuits (Option 024) add remote programming and digital output capability to the Power Meter. As stated previously, the programming outputs of these circuits are applied to the Controller in a "WIRED OR" configuration with the outputs of the front-panel switches. Thus, local or remote operation of the Power Meter is selected by the Remote Enable input to the BCD Interface Circuits. When the Remote Enable input is false (low), it enables the Range Select Gates, the Mode Select Gates, and the Remote Qualifier Multiplexer, and sets the LREM output low to disable the front-panel switches. Thus, the programming inputs to the BCD Interface Circuits are enabled to select the desired type of Power Meter operation. When the Remote Enable input is true (high), the Range Select Gates, the Mode Select Gates, end the Remote Qualifier Multiplexer are disabled and the LREM output is set high to enable the front-panel switches to select the desired type of Power Meter operation.

8-157. Output Data. The Line Buffers are continuously enabled for both local and remote operation. They invert and buffer the measurement and status inputs for continuous application to a remote controller via rear-panel BCD Remote Interface connector J7. Each time that the operating program enters the Display and Remote Talk Subroutine, a low Print output is generated in response to the LSDAV instruction to inform the external controller that the data output of the line selectors is valid. The Print output is then reset high by the HLLD instruction generated at the start of the next program cycle.

CIRCUIT DESCRIPTIONS

Service Sheet 5 (cont'd)

8-158. Range Programming Commands. The Range Select Gates continually buffer the Range Bit 1, 2, and 3 inputs to provide YRR1, YRR2, and YRR3 outputs to the Controller. As stated previously, these outputs are only loaded into the Range Counter at the start of each program cycle when remote operation is enabled (LREM output low) and auto-ranging is not selected (NAUTO output high).

8-159. The Auto Range output of the Range Select Gates is generated by decoding the Range Bit 2 and 3 inputs. When both of these inputs are high (range 6 or 7) and the Remote Enable input is low, a gate is enabled to set the NAUTO output to the Controller low. When remote operation is not selected, the high Remote Enable input holds the NAUTO output at a high level to enable "WIRED OR" selection of this function via the front-panel RANGE HOLD switch.

8-160. The remaining output of the Range Select Gates is the LPU signal. This output is set false (low) to hold the operating program at starting address 000_8 when the Range Bit inputa are all low (range 0) and remote operation is selected by a low Remote Enable input.

8-161. Mode Programming Commands. The Mode Select Gates buffer the Mode, Cal Factor Disable, and Sensor Zero programming inputs and gate these inputs with the Remote Enable input. When the Remote Enable input is low, the gates are enabled and the programming inputs are routed to the Controller to control Power Meter operation as described on Service Sheets 2 and 3, Block Diagram Description. When the Remote Enable input is high, the outputs of the gates are reset high to enable "WIRED OR" selection of these functions via the front-panel switches.

NOTE

A jumper option is provided to enable the Sensor Zero function to be programmed independently of the Remote Enable input (refer to Table 2-1). Thus, when the optional jumper connection is employed and the Power Meter is configured for local operation, the Sensor Zero function can be selected either by the remote programming input of the front-panel SENSOR ZERO switch.

8-162. Measurement Rate Programming, Remote Qualifier/Program Interface, and Talk Cycle. In order to understand how the Measurement Rate Programming Commands are processed to enable free-run, triggered, or hold operation of the Power Meter, it is necessary to refer to Figure 8-15, Sheet 14, of the Operating Program Flow Chart. On this figure it is shown that various remote qualifiers are processed to control branching of the operating program and that each of the qualifiers is identified by a 3X code with the X representing a digit from 1 to 7. To access a remote qualifier, the operating program encodes the particular digit associated with the qualifier into the HIA, HIB, and HIC inputs to the Remote Qualifier Multiplexer, thereby causing the Multiplexer to route the qualifier to the Controller. As shown on Service Sheet 5 Block Diagram, all but the Rate, DACQ and LREM qualifier inputs to the Remote Qualifier Multiplexer are hardwired to preselect the majority of the operating program branching decisions. Thus, when the BCD Interface Circuit option is installed, the operating program will always branch to address 045_8 after entering the Display and Remote Talk Subroutine. The state of the DACQ qualifier will then determine further branching.

8-163. The DACQ qualifier output of the Measurement Control Circuit is controlled by the Print signal described previously under Output Data. When the Print signal is high, it holds the DACQ qualifier high; when the Print signal is low, the DACQ qualifier is controlled by the Inhibit and Trigger inputs. Since the Print signal is set high by the HLLD instruction generated at the start of each program cycle, the operating program will always branch from address 045_8 to address 046_8 each time that it subsequently enters the Display and Remote Talk Subroutine. The resulting LSDAV instruction will then set the Print output low, allowing the DACQ qualifier to be controlled by the Inhibit and Trigger inputs as described in the following paragraphs.

a. When the Inhibit input to the Measurement Control Circuit is programmed high to select free-run operation, a gate is enabled by the low Print signal and a low DACQ output is provided to

CIRCUIT DESCRIPTIONS

Service Sheet 5 (cont'd)

the Remote Qualifier Multiplexer. Thus, the operating program is enabled to continue to the Local/Remote Branch Subroutine to initiate the next program cycle. If remote operation is selected (LREM qualifier low), the rate programming input is then accessed by the operating program in the Remote Initialize Subroutine to enable an immediate (Rate-high) or delayed measurement (Rate-low).

b. When the Inhibit input to the Measurement Control Circuit is programmed low to prevent free-run operation, the output of a flip-flop is gated with the Print signal to control the state of the DACQ qualifier (see Service Sheet 13). This flip-flop is held reset during each program cycle while the Print signal is high, thereby causing the DACQ qualifier to be held high. When the Print signal is set low by the LSDAV instruction, the flip-flop is allowed to respond to the Trigger input. Until a negative-going trigger is applied to the Power Meter a hold loop (address 110_8 and 106_8) is enabled by the high DACQ qualifier. After a Trigger input is received, the set output of the flip-flop and the low Print signal cause the DACQ qualified to go low, thereby enabling the operating program to continue as previously described.

SERVICE SHEET 1

BLOCK DIAGRAM CIRCUIT DESCRIPTIONS

The Block Diagram Circuit Descriptions for Service Sheet 1 are covered in paragraphs 8-71 through 8-74, Troublshooting in paragraphs 8-55 through 8-62, and Standard Instrument Checkout in Table 8-3.

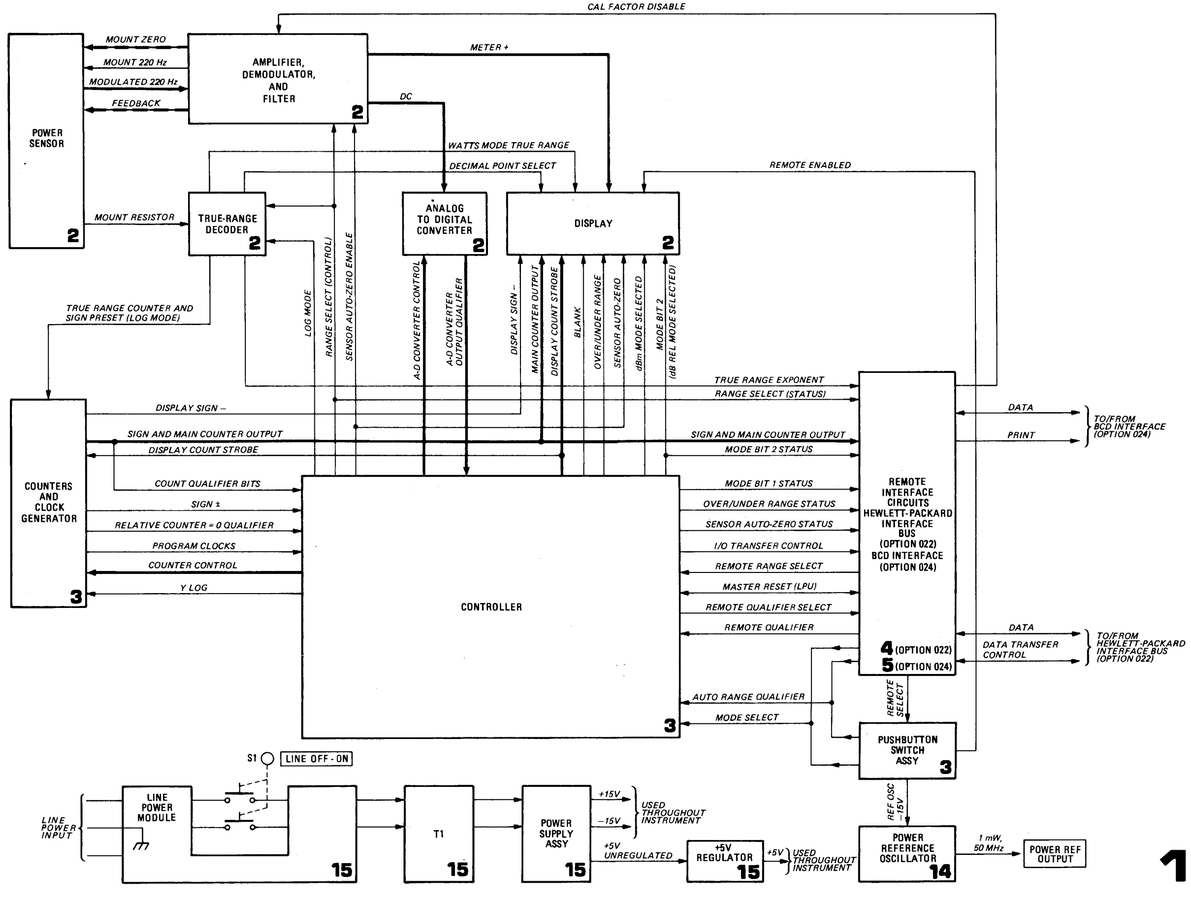

Figure 8-21. Overall Block Diagram

SERVICE SHEET 2

BLOCK DIAGRAM CIRCUIT DESCRIPTIONS

The Block Diagram Circuit Descriptions for Service Sheet 2 are covered in paragraphs 8-75 through 8-86, Troubleshooting in paragraphs 8-55 through 8-62, and Standard Instrument Checkout in Table 8-3.

◀ Overall Block Diagram
SERVICE SHEET 1

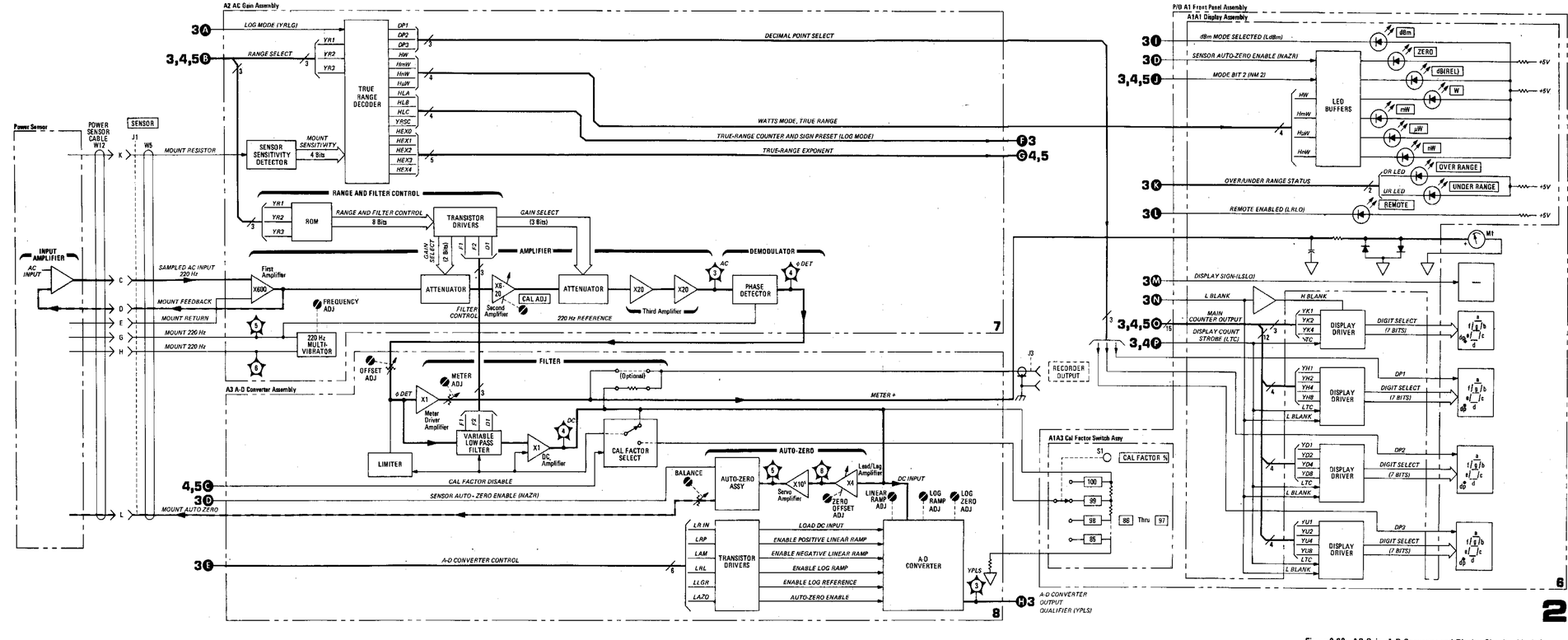

Figure 8-22. AC Gain, A-D Converter and Display Circuits Block Diagram

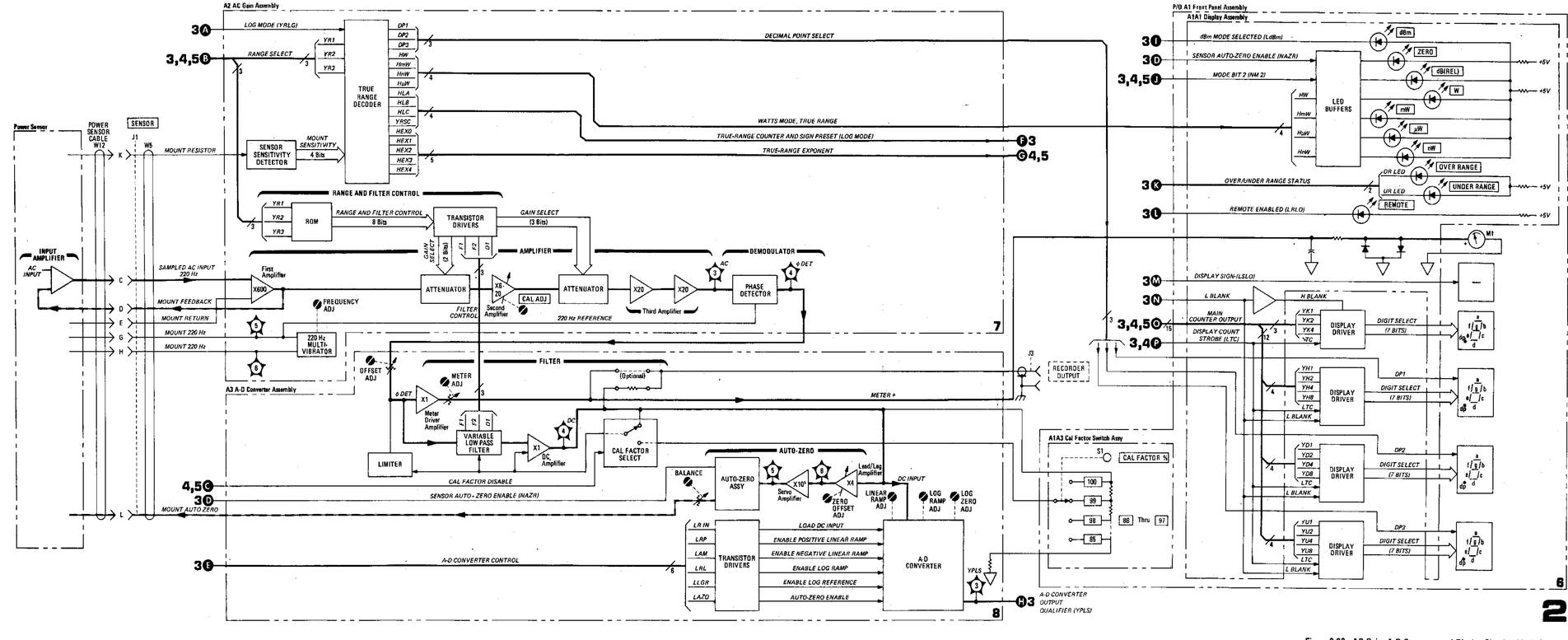

Figure 8-22. AC Gain, A-D Converter and Display Circuits Block Diagram

SERVICE SHEET 3

BLOCK DIAGRAM CIRCUIT DESCRIPTIONS

The Block Diagram Circuit Descriptions for Service Sheet 3 are covered in paragraphs 8-87 through 8-113, Troubleshooting in paragraphs 8-55 through 8-62, and Standard Instrument Checkout in Table 8-3.

AC Gain, A-D Converter, and Display Circuits Block Diagram (A1A1, A2, A3)
SERVICE SHEET 2

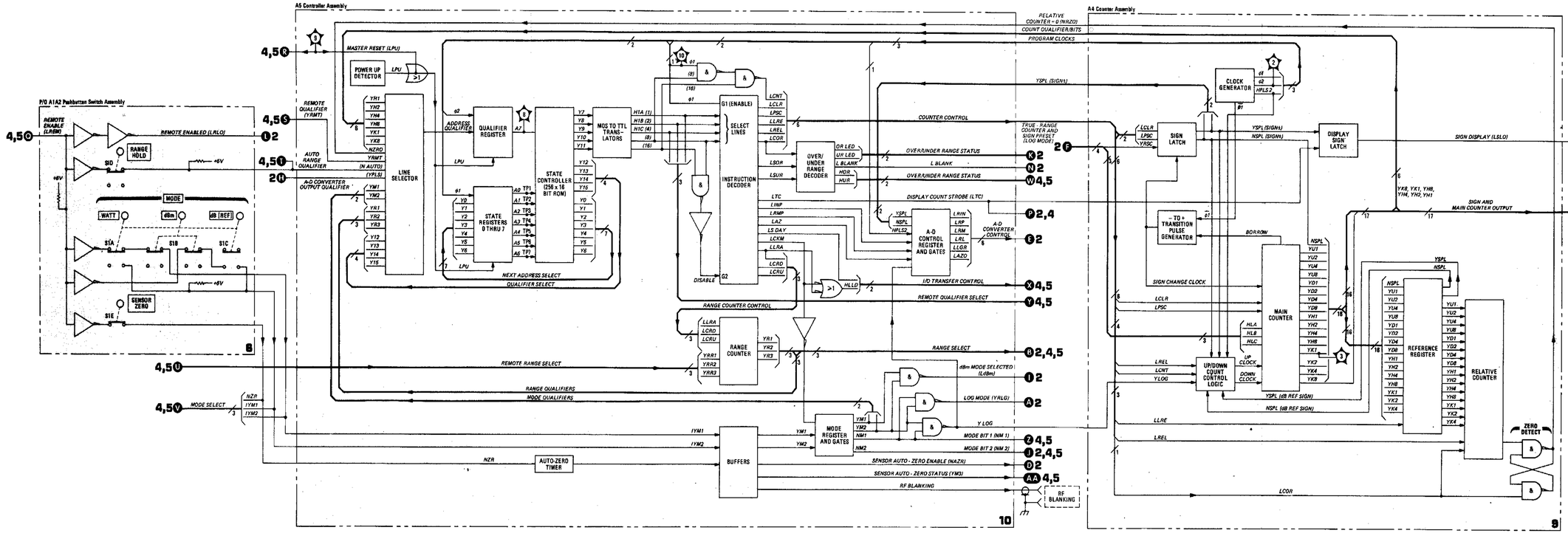

Figure 8-23. Controller and Counters Block Diagram

SERVICE SHEET 4

BLOCK DIAGRAM CIRCUIT DESCRIPTIONS

The Block Diagram Circuit Descriptions for Service Sheet 4 are covered in paragraphs 8-111 through 8-154, HP-IB Instrument Checkout in paragraphs 8-63 through 8-66, HP-IB Verification Programs in Figures 8-16 and 8-17, and Troubleshooting in Table 8-4.

Controller and Counters Block Diagram (A1A2, A4, A5)
◀ SERVICE SHEET 3

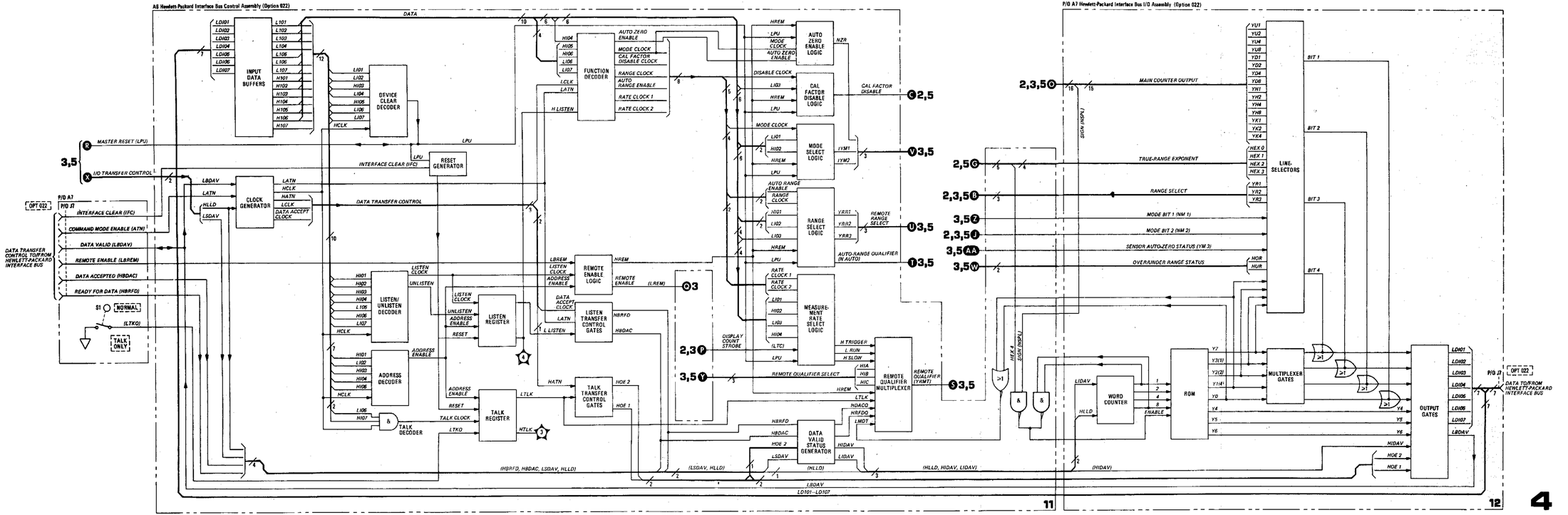

Figure 8-24. HP-IB (Option 022) Circuit Block Diagram

SERVICE SHEET 5

BLOCK DIAGRAM CIRCUIT DESCRIPTIONS

The Block Diagram Circuit Descriptions for Service Sheet 5 are covered in paragraphs 8-155 through 8-163 and BCD Instrument Checkout in paragraphs 8-67 through 8-69 and in Table 8-5.

HP-IB (Option 022) Circuit Block Diagram
(A6, A7)
◀ SERVICE SHEET 4

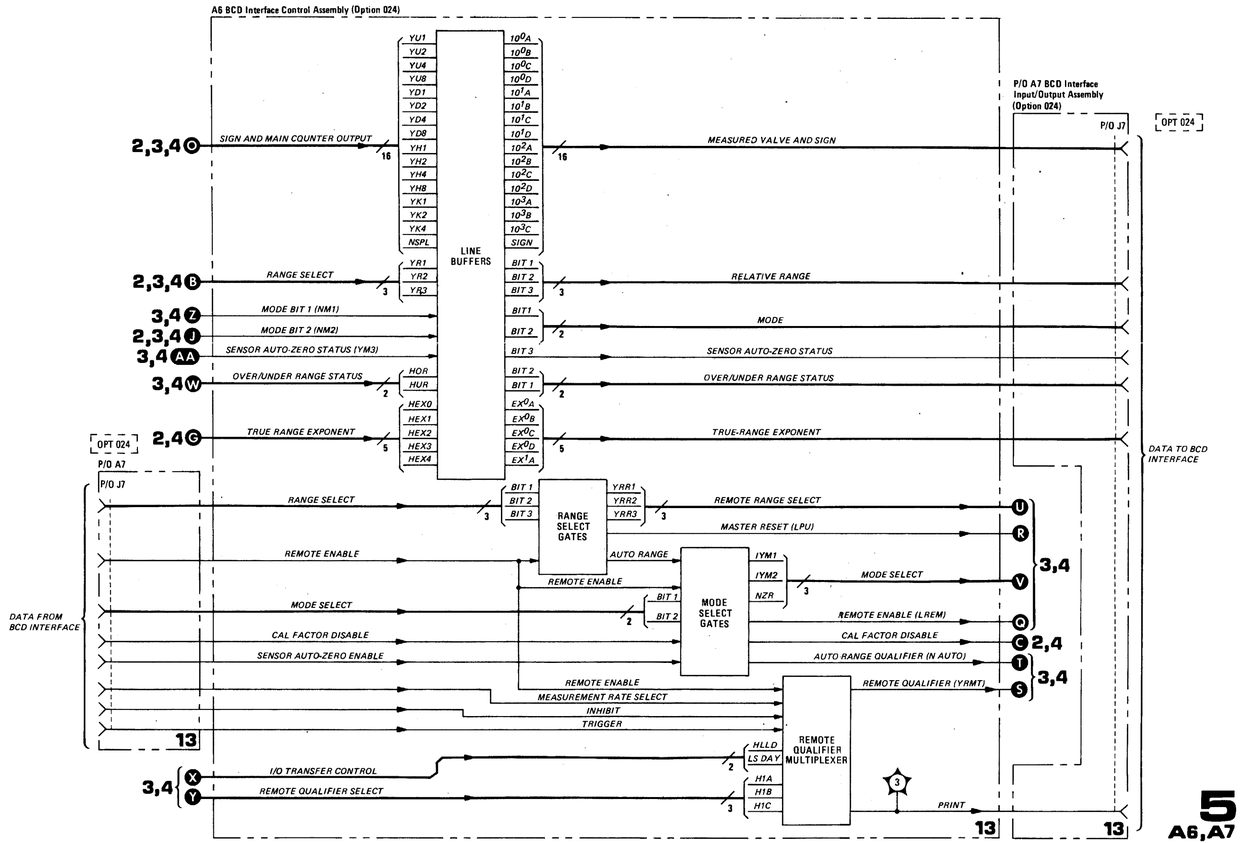

Figure 8-25. BCD Interface (Option 024) Circuit Block Diagram

SERVICE SHEET 6

CIRCUIT DESCRIPTIONS

The circuits described in Service Sheet 6 are covered on Service Sheets 1 and 2 and Trouble-shooting in paragraphs 8-55 through 8-62.

BCD Interface (Option 024) Circuit Block Diagram (A6, A7)
SERVICE SHEET 5

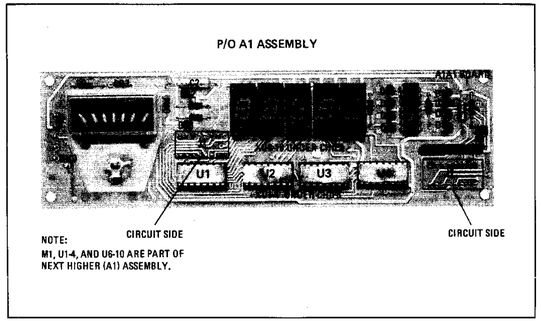

Figure 8-26. A1A1 Display Assembly Component Locations

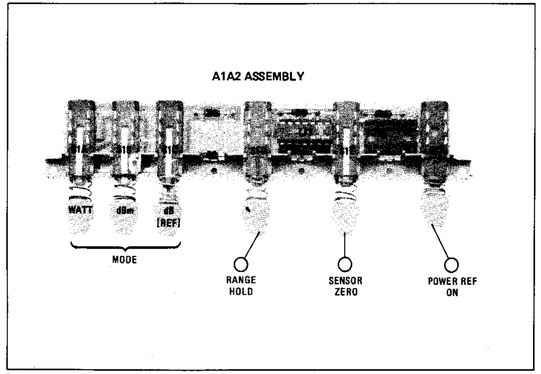

Figure 8-27. A1A2 Pushbutton Assembly Component Locations

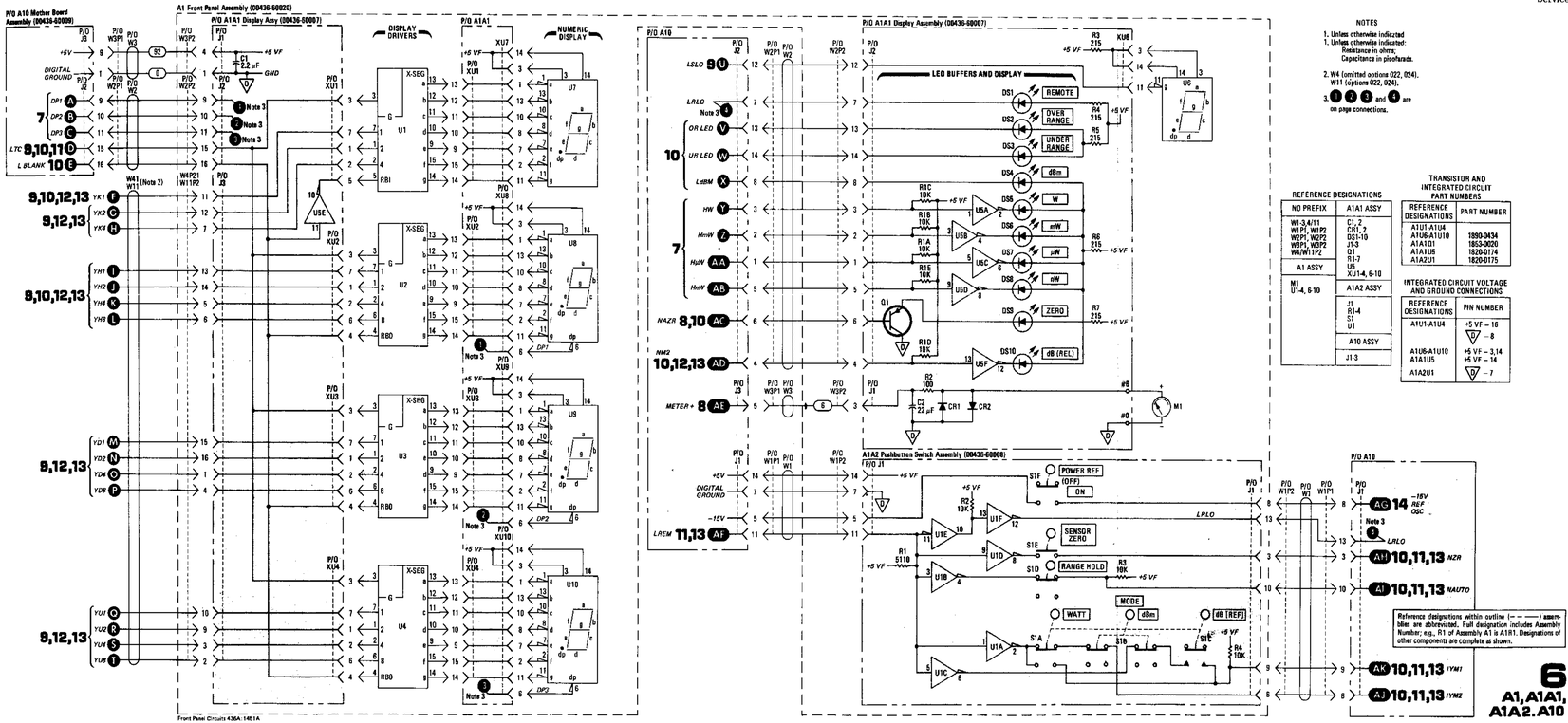

NOTES

1. Unless otherwise indicated
   Unless otherwise indicated:
   Resistance in ohms,
   Capacitance in picofarads.
2. W4 (omitted options 022, 024).
   W11 (options 022, 024).
3. 1 2 3 and 4 are on page connections.

REFERENCE DESIGNATIONS

NO PREFIX	A1A1 ASSY
W1-3,4/11 W1P1, W1P2 W2P1, W2P2 W3P1, W3P2 W4/W11P2	C1, 2 CR1, 2 DS1-10 J1-3 Q1 R1-7 U5 XU1-4, 6-10
A1 ASSY	
M1 U1-4, 6-10	A1A2 ASSY
	J1 R1-4 S1 U1
	A10 ASSY
	J1-3

TRANSISTOR AND INTEGRATED CIRCUIT PART NUMBERS

REFERENCE DESIGNATIONS	PART NUMBER
A1U1-A1U4	1880-0434
A1A1D1	1853-0020
A1A1U6	1826-0174
A1A2U1	1826-0175

INTEGRATED CIRCUIT VOLTAGE AND GROUND CONNECTIONS

REFERENCE DESIGNATIONS	PIN NUMBER
A1U1-A1U4	+5 VF – 16 ▽ – 8
A1U5-A1U10 A1A1U5	+5 VF – 3,14 +5 VF – 14
A1A2U1	▽ – 7

Reference designations within outline (– – – –) assemblies are abbreviated. Full designation includes Assembly Number; e.g., R1 of Assembly A1 is A181. Designations of other components are complete as shown.

Figure 8-28. Front Panel Assembly Schematic Diagram

SERVICE SHEET 7
CIRCUIT DESCRIPTIONS

General

The RF input power applied to the Power Sensor is dissipated by the load impedance of the power sensing device. The dc output of the power sensing device is converted to a 220 Hz ac signal by a sampling gate (chopper) circuit. The ac signal, which is proportional to the RF input, is amplified by tuned ac amplifier stages in the Power Sensor and Power Meter. The Phase Detector converts the amplified 220 Hz ac signal back to a dc level which is proportional to the RF input power level.

The Attenuator reduces the ac signal for high power inputs. This allows equal measurement resolution for high and low power levels. The Phase Detector and a sampling gate circuit (in the Power Sensor) are driven in phase by the 220 MHz Multivibrator's outputs.

A2U5B is connected as a voltage follower between the Mount Return line and Analog Ground. This circuit ensures that a minimum voltage difference exists between the grounds thereby eliminating the possibility of unreliable readings. High current flow, through the ground return of cables which are greater than 1.52 metres (5 feet) long, cause the voltage difference.

First Amplifier

The First Amplifier of the Power Meter and the Power Sensor's output amplifier stage form a low-noise high-gain hybrid operational amplifier (refer to the figure below). The ac gain is approximately 600; dc bias is set by A2R1, R2, R5, R6, and R7.

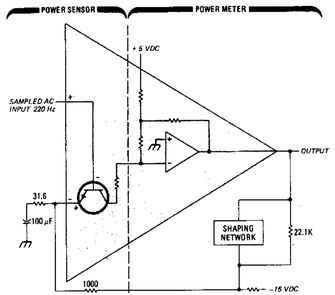

Hybrid Operational Amplifier

SERVICE SHEET 7 (cont'd)

Diodes A2CR1, CR2, VR1, and VR2 and their associated components are part of a shaping network which compensates for the non-linear output of the Power Sensor's sensing device. At RF inputs near the maximum power input (100 mW for Model 8481A) the power sensing device is slightly more efficient and the hybrid amplifier's gain is reduced slightly to provide a linear overall response.

The combination of A2C5, R10, and R11 is one of three RC networks in the ac amplifiers which determine the high frequency cutoff (240 Hz) of the 220 ± 20 Hz bandpass. A2C3, C4, and C6 are line noise filters.

Attenuator and Second Amplifier Assemblies

The Attenuator Networks and associated components on the A2 assembly form two separate attenuators and a variable low pass filter.

With high power RF inputs, relatively high voltages are coupled to the attenuator inputs. The higher the voltage the more it is attenuated, thus allowing for greater sensitivity needed for low power measurements while providing the needed resolution for each range. The various levels of attenuation permit five usable ranges whose values are determined by the Power Sensor being used. The following table shows the individual and combined effects of the attenuators on the ac signal. The attenuation resistors, therefore the value of attenuation, is selected by the outputs from the ROM A2U6 applied to the transistors A2Q21 through A2Q25.

RANGE	Attenuation		
	Network #1 (A2 R24 & R25)	Network #2 (A2R37, R38, and R39)	Total
1	÷ 1	÷ 1	÷ 1
2	÷ 1	÷ 10	÷ 10
3	÷ 1	÷ 100	÷ 10^2
4	÷ 100	÷ 10	÷ 10^3
5	÷ 100	÷ 100	÷ 10^4

The bandpass of the ac amplifiers in the Power Meter is approximately 220 ± 20 Hz. The lower cutoff frequency (200 Hz) is fixed by the combination of A2C8 with A2R24 and R25; also A2C11 with A2R37, R38, and R39.

Second Amplifier

A2U1 and its associated components form an operational amplifier stage with variable voltage gain from 2.1 to 4.2. The front panel CAL ADJ gain control is set to compensate for differences in sensitivity of individual Power Sensors. The gain is

SERVICE SHEET 7 (cont'd)

determined by A2R28, R33, and the CAL ADJ control R16.

Third Amplifier

A2U2A and B and associated components are operational amplifiers with voltage gains of about 20 each. Gain for A2 U2A is determined by A2R52 and R53; for A2U2B by A2R48 and R49. Bias current is provided for A2U2A by A2R50.

The tuned amplifiers upper bandpass limit (240 Hz) is set by the parallel RC network of A2C12 and R48; A2C14 and R52; also in conjunction with a parallel RC network in the First Amplifier.

Phase Detector

The Phase Detector, like the sampling gate circuit in the Power Sensor, is driven by the 220 Hz Multivibrator drive signal. The 220 Hz switching signal (0 to −10 Vdc) is applied through the voltage divider A2R61 and R67 to the base of A2Q14 at a level of 0 to −0.6 Vdc. This signal turns Q14 on and off and causes the collector voltage to vary from 0 to −15 Vdc. The collector voltage from Q14 is applied to the base of A2Q13 through the voltage divider A2R60 and R62. This signal turns Q13 off and on causing the collector voltage to vary from 0 to −15 Vdc at a 220 Hz rate. The collector voltage from Q13 is applied to the gate of the n-channel FET Q12. This gate drive causes Q12 to turn on and off. When Q12 turns off, U8 operates as an amplifier with a gain of 1. When Q12 turns on, the non-inverting input to U8 is grounded, causing U8 to operate as an inverting amplifier with a gain of −1. Any phase difference between the 220 Hz input signal to U8 and the 220 Hz switching signal from Q12 will cause the output of U8 pin 6 to be offset from the zero dc baseline. The output of the Phase Detector is applied to the A3 A-D Converter Assembly.

Sensor Sensitivity Detector and True Range Decoder

The Sensor Sensitivity Detector circuit consists of U4A, B, C, D and associated components. The True Range Decoder consists of U7 and U3.

The Sensor Sensitivity Detector, U4A, B, C, and D, provides inputs to the True Range Decoder, U7 along with the Range Counter (YR1, YR2, and YR3) in Local Mode, the programmed range inputs (YRR1, YRR2, and YRR3) when in Remote Mode, and YRLR input to give the correct range indication and decimal point location for the RF input power level being measured by the Power Sensor.

The Sensor Sensitivity Detector provides one input code to the True Range Decoder determined by the Power Sensor being used. When the non-inverting inputs to U4A, B, C, and D are the less positive inputs, the outputs are at approximately 0 volts (ground). When the non-inverting inputs are the more positive inputs, the outputs are approximately +15 volts (see tables below). The level

SERVICE SHEET 7 (cont'd)

on non-inverting inputs to U4A, B, C, and D is determined by the voltage divider composed of A2R14 and the Sensor Resistor (see tables below). When the Sensor Resistor is 0 ohms (GND), the outputs of U4 are approximately 0 volts.

For a 10W maximum input to the Power Sensor, the Sensor Resistor is approximately 3.46k ohms and the voltage level at the non-inverting inputs of U4 is approximately +2.8 volts. The output of U4C changes to approximately +15 volts. This change was caused by the non-inverting input going more positive than the inverting input level which is approximately +2 volts. The inverting input level is determined by the voltage divider composed of A2R29, R30, and R31. A2R29 is in parallel with R31 to ground. When the output of U4C changes to +15 volts, the inverting input to U4D changes to approximately +4 volts because now R36 and R40 are in parallel with the +15 volts applied and R32 and R41 are in parallel to ground, thus forming a series parallel network between ground and +15 volts. The table below gives the complete list of U4 inputs and outputs for each Sensor Resistor and the logic input codes to U7.

Front Panel Assembly (A1A1, A1A2) ◀ SERVICE SHEET 6

Sensitivity Detector Logic

Maximum Range F.S.	U4B			U4A			U4C			U4D			U7			
	5	6	7	1	2	3	8	9	10	12	13	14	14	27	3	26
10 µW	6.1	11.9	0.0	13.7	5.4	6.1	0.7	8.5	6.1	6.1	7.1	0.0	0	1	0	0
100 µW	7.6	11.9	0.0	13.7	5.4	7.6	0.7	8.5	7.6	7.6	7.1	13.8	0	1	0	1
1 mW	9.0	11.8	0.0	13.7	5.4	9.0	13.8	8.5	9.0	9.0	10.1	0.0	0	1	1	0
10 mW	10.6	11.8	0.0	13.7	5.4	10.6	13.8	8.5	10.6	10.6	10.1	13.8	0	1	1	1
100 mW	0.0	11.8	0.0	.6	5.4	0.0	0.1	2.2	0.0	0.0	0.6	0.0	0	0	0	0
1W	1.5	11.8	0.0	.6	5.4	1.5	0.1	2.2	1.5	1.5	0.6	13.8	0	0	0	1
10W	2.9	11.8	0.0	.7	5.4	2.9	13.7	2.2	2.9	2.9	3.7	0.0	0	0	1	0
100W (Open)	4.5	11.8	0.0	.7	5.4	4.5	13.7	2.2	4.5	4.5	3.7	13.8	0	0	1	1
Error	15.1	11.8	13.8	13.7	5.4	15.1	13.8	8.5	15.1	15.1	10.1	13.8	1	1	1	1

All voltages shown are ± 0.1 Vdc.

Power Sensor Maximum and Minimum F. S. Ranges and Resistor Values

Power Sensor	Maximum Power Range F.S.	Minimum Power Range F.S.	Power Sensor Resistor Value
8484A	10 µW (−20 dBm)	1 nW (−60 dBm)	10.0kΩ
	100 µW (−10 dBm)	10 nW (−50 dBm)	14.7kΩ
	1 mW (0 dBm)	100 nW (−40 dBm)	21.5kΩ
	10 mW (+10 dBm)	1 µW (−30 dBm)	34.8kΩ
8481A/8482A/8483A	100 mW (+20 dBm)	10 µW (−20 dBm)	0Ω (Gnd)
	1 W (+30 dBm)	100 µW (−10 dBm)	1.62kΩ
8481H/8482H	10 W (+40 dBm)	1 mW (0 dBm)	3.46kΩ
	100 W (+50 dBm)	10 mW (+10 dBm)	6.19kΩ

Input and Output Code for A2U6 ROM

Input & Pin No.	Range					Output Pin No.
	1	2	3	4	5	
YR1 10	1	0	1	0	1	9
YR2 11	0	1	1	0	0	7
YR3 12	0	0	0	1	1	6
1 = 5V; 0 ≤ 0.3V						5
						4
						3
						2
						1

1 = 0.6V; 0 = 0.1V

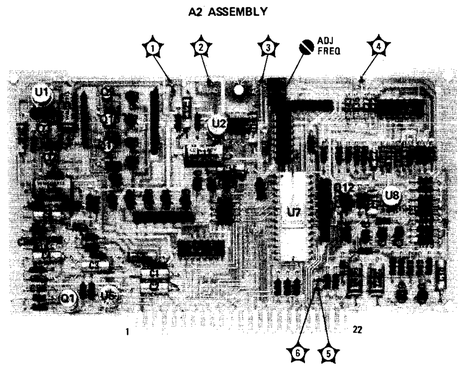

Figure 8-29. A2 AC Gain Assembly Component, Test Point, and Adjustment Locations

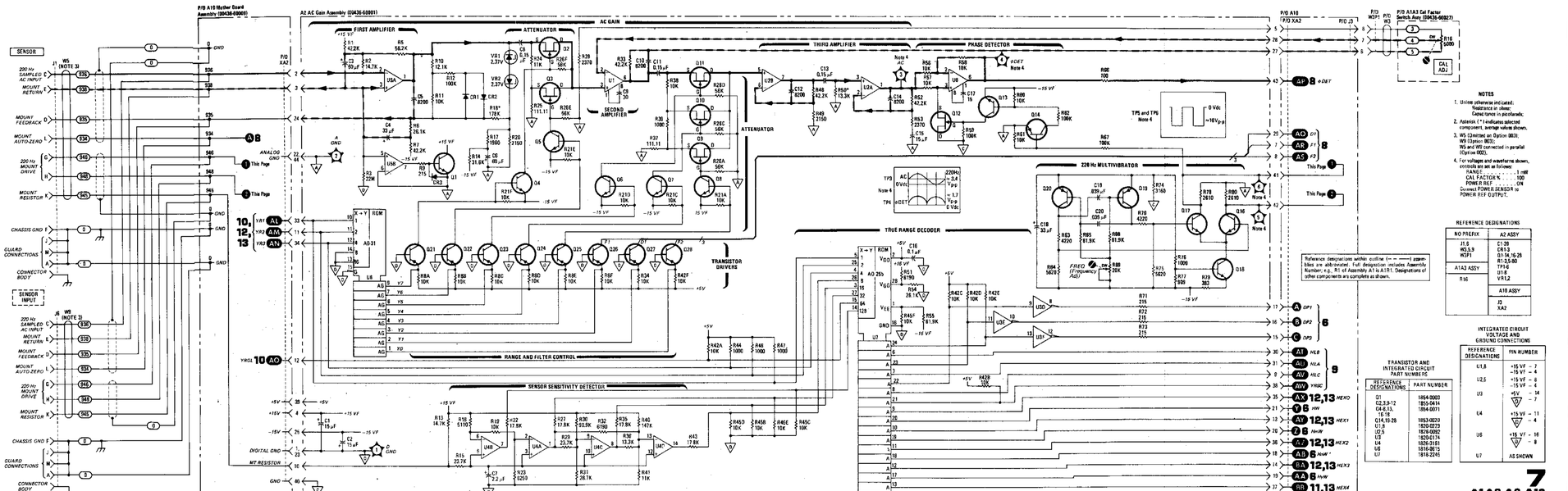

NOTES

1. Unless otherwise indicated:
   Resistance in ohms;
   Capacitance in picofarads;
2. Asterisk (*) indicates selected component, average values shown.
3. W5 (Omitted on Option 003); W9 (Option 003);
   W5 and W9 connected in parallel (Option 002).
4. For voltages and waveforms shown, controls are set as follows:
   RANGE . . . . . 1 mW
   CAL FACTOR % 100
   POWER REF . . . . . ON
   Connect POWER SENSOR to POWER REF OUTPUT.

REFERENCE DESIGNATIONS

NO PREFIX	A2 ASSY
J1,6	C1-20
W2,3,9	CR1-2
W3*1	Q1-14, 16-28
	R1-13,5-90
A1A3 ASSY	TP1-6
	U1-8
R16	V1-2
	A10 ASSY
	J3
	XA2

Reference designations within outline (— — —) assemblies are add-insted. Full designation includes Assembly Number; e.g., R1 of Assembly A1 is A1R1. Designations of other components are complete as shown.

TRANSISTOR AND INTEGRATED CIRCUIT PART NUMBERS

REFERENCE DESIGNATIONS	PART NUMBER
Q1	1854-0003
Q2,3,9-12	1853-0414
Q4-8,13, 16-18	1854-0071
Q14,19-28	1853-0020
Q1,8	1820-0273
U2,5	1826-0092
U3	1826-0174
U4	1826-3151
U6	1816-3615
U7	1818-2245

INTEGRATED CIRCUIT VOLTAGE AND GROUND CONNECTIONS

REFERENCE DESIGNATIONS	PIN NUMBER
U1,8	+15 VF = 7 +15 VF = 4
U2,5	+15 VF = 8 -15 VF = 4
U3	+5 V = 14 ▽ = 7
U4	+15 VF = 11 ▽ = 4
U6	+15 VF = 16 ▽ = 8
U7	AS SHOWN

7
A1A3,A2,A10

Figure 8-30. AC Gain Assembly Schematic Diagram

SERVICE SHEET 8

CIRCUIT DESCRIPTIONS

General

The Phase Detector's output signal is applied to the Meter Amplifier and Limiter circuits. The input signal passes through the Limiter and Variable Low-Frequency Filter circuits before being amplified by the DC Amplifier. The gain of the DC Amplifier is controlled by the setting of the CAL FACTOR % switch, A1S2. The output of the DC Amplifier is applied to the Cal Factor Select circuit, Lead/Lag Amplifier, RECORDER OUTPUT connector, and the A-D Converter. The Meter Amplifier provides the necessary drive for the front panel meter (M1). It also provides an unfiltered signal for the rear panel RECORDER OUTPUT connector if the standard connection of A3R69 is not desired. The Lead/Lag Amplifier maintains the phase-gain response of the feedback loop in a stable mode. The Servo Amplifier has an integrator in its feedback loop (C16 and R54) which also shapes the overall phase-gain response of the Auto-Zero feedback path. The Servo Amplifier generates an error voltage if the DC Amplifier's output is not near zero volts. Without an RF input applied to the Power Sensor, the DC Amplifier's output is very close to 0 Vdc. When the SENSOR ZERO switch is depressed, or the Sensor-Zero Remote command is enabled (NAZR), causing the ZERO lamp to light, the relay in A3A1 to close its contacts, and the Servo Amplifier's output to produce an error offset voltage. This error voltage is applied to the Auto-Zero Assembly (A3A1) from where it is processed and summed with the output from the Power Sensor's sensing element. This composite voltage provides a correction signal of equal dc level but opposite polarity to the output of the sensing element with no RF input signal applied. With the corrected input voltage, the DC Amplifier's output is exactly 0 Vdc. When the SENSOR ZERO switch is released, or the NAZR signal is disabled, the Servo Amplifier's output voltage level is stored within the Auto-Zero Assembly and the correction voltage remains coupled across the sensing element until another Auto-Zero correction is needed.

The Transistor Drivers provide buffering and signal level conversion for the A-D Converter's control signals. The A-D Converter provides either a negative or positive linear or exponential ramp to the Comparator. The Comparator's output (YPLS) at A3TP3 is either high or low, if the A-D Converter's threshold is above or below the dc input signal level and is midway between high and low during the A-D Converter's Auto-Zero cycle.

Limiter and Variable Low-Pass Filter Circuits

The Limiter circuit clips over-range outputs from the Phase Detector to reduce the time for the Variable Low-Pass Filter to recover from a greater than full-scale change in the input signal level. The response time of the Filter varies with the bandpass selected by the ROM's outputs (D1, F1, and F2). For ranges 5, 4, and 3, the bandpass is 17 Hz. For ranges 2 and 1, the bandpass is

SERVICE SHEET 8 (cont'd)

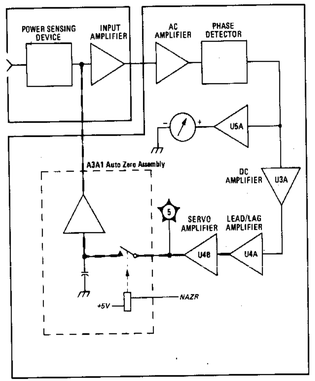

Auto-Zero Feedback Path

reduced by factors of 10 to 1.7 and 0.17 Hz, respectively. The bandpass values represent the optimum tradeoff between filter response time and signal-to-noise ratio. On the higher ranges (3, 4, and 5), the gain of the Power Meter is relatively low and the 17 Hz bandpass enables the Filter to respond to a full-scale change in input level in 0.1 second (see Figure 3-7). On the lower ranges (1 and 2), the gain of the Power Meter increases and a higher noise level is present at the output of the Phase Detector. Thus, a narrower bandpass is required to maintain the desired signal-to-noise ratio at the input of the A-D Converter. The time required for the Filter to respond to a full-scale change in input level is one second on range 2 and ten seconds on range 1. Resistors A3R16, R22, R26, and R30 modify the Power Meter's Sensor-Zero feedback loop's phase-gain response to maintain stability in the loop.

DC Amplifier

The output from the Variable Low-Pass Filter is applied to the input of the DC Amplifier. The DC OFF (DC Offset) control is adjusted to eliminate any dc offset voltage introduced by the DC Amplifier. The gain of the DC Amplifier is one when the CAL FACTOR % switch is set to the 100 position. The gain increases by approximately 1% for each lower-numbered switch

SERVICE SHEET 8 (cont'd)

position. The output of the DC Amplifier is applied to the A-D Converter, the RECORDER OUTPUT connector, and the Lead/Lag Amplifier circuits.

Lead/Lag Amplifier and Servo Amplifiers

The output signal from the DC Amplifier is applied to the non-inverting input of U4A. The Lead/Lag Amplifier and Servo Amplifier are connected in series in the Sensor-Zero feedback loop and function only when the SENSOR ZERO switch is depressed or the Remote Interface produces a Sensor Zero command. R46 and C11 form a high frequency roll-off filter at the input to U4A. Capacitors C14 and C15 form a 0.5 μF non-polarized capacitor for the feedback across U4A. The combination of C13, C14, C15, R52, R53, and R55 reduce the high frequency response of U4A, while increasing the low frequency response of U4A. The output from U4A is applied to the non-inverting input of U4B, Servo Amplifier. VR4 and VR5 act to prevent the output of U4B from going more than ± 8.25V. The output from U4B is applied to the input of the Auto-Zero Assembly (A3A1). The drain signal from the FET, A3A1 Q_A, is fed back to the non-inverting input of U4B through C16 and R54. The feedback path of U4B is an integrator that causes the high frequencies to be reduced. The output from the Auto-Zero Assembly is applied to the Power Sensor to develop a correction voltage that is input back to the DC Amplifier. This correction voltage is stored in capacitor A3A1C_A. When the SENSOR ZERO switch is released, this voltage holds the correction voltage constant at the Power Sensor. The special construction of the A3A1 assembly and the high gate impedance of A3A1Q_A reduces the leakage from A3A1C_A and therefore increases the storage time of the correction voltage. A3R65 BAL (Balance) control is provided to center the Auto-Zero circuit's output voltage range. (See Section V, Spike Balance Adjustment).

Transistor Drivers

The Transistor Driver circuits consist of transistors A3Q1 through A3Q12 and associated components. The Transistor Drivers provide buffering and signal level conversion for the control signals being applied to the A-D Converter from the Controller Assembly A5.

Transistors A3Q1 through A3Q12 are connected to provide a level transformation from TTL logic levels of 0 and +5 volts to 0 and −15 volts required to turn on and off the FET switches in the A-D Converter.

A-D (Analog-To-Digital) Converter

The A-D Converter Auto-Zero Enable (LAZO) signal causes FET's A3Q14 and A3Q20 to conduct. A3Q14's conduction holds the inverting input of A3U1 pin 2 low. A3Q20's conduction closes a feedback path from the output of the comparator (A3U2) through A3R66, A3R58, A3Q20, and A3R50 to the non-inverting input of A3U1 pin 3. This path allows A3C9 to charge up and hold the

SERVICE SHEET 8 (cont'd)

YPLS (A3TP3) output of A3U2 at approximately +2.0 Vdc. This value is valid for only Auto-Zero operations. Loss of the LAZO signal opens the feedback path and releases the low on pin 2 of A3U1.

The DC Input Enable (LRIN) causes FET A3Q13 to conduct, applying the dc input voltage from the DC Amplifier to the inverting input of A3U1 pin 2. Transistor A3Q17 and zener diode A3VR2 produce a negative voltage reference source, −VR. A3U5B, A3R40, and A3R43 form an inverting amplifier with a gain of −1. Thus, producing the positive voltage reference source at the output of A3U5B pin 7 (+VR). The Enable Positive Ramp (LRP) causes FET A3Q16 (+RAMP) to conduct and apply a negative input to A3U1 from the −VR source. A3R37 LIN (Linearity) control is adjusted for a specific digital readout (see Section V, Adjustments). Capacitor A3C12 is charged up to approximately −7 times the dc input voltage when the DC Input Enable is terminated. A3C12 discharges at a rate of approximatley 3.5 mV/clock pulse. The output level at pin 6 of A3U1 should reduce to approximately 0 Vdc. The output of A3U1 is applied to the inverting input of A3U2 producing a high output if the threshold was below the dc input level, or a low if it was above the input level.

The Enable Negative Ramp (LRM) causes FET A3Q15 (−RAMP) to conduct, applying a positive input to A3U1 from the +VR source. The Enable Log Ramp (LRL) and the Log Enable Reference (LLGR) cause FET's A3Q18 and A3Q19 to conduct. A3Q19 completes a path to apply a negative threshold voltage to pin 3 of A3U2. This is the Log Reference voltage. As the output of A3U1 discharges to the threshold level, the output of the Comparator remains constant. When the voltage at pin 2 of A3U2 reaches the threshold level, the output of the Comparator switches to the opposite polarity.

AC Gain Assembly (A2)
SERVICE SHEET 7

SERVICE SHEET 8 (cont'd)

TROUBLESHOOTING

General

Before attempting to troubleshoot these circuits, verify that the power supply is operating properly. The voltages should be +5 Vdc, +15 Vdc, and −15 Vdc.

If the dc offset controls A3R2, A3R47, or A3R65 are incorrectly adjusted, the Auto-Zero circuits may not respond properly. Refer to the adjustment procedures in Section V.

Noise problems may be due to defective components in the Variable Low Pass Filter (especially in the two most sensitive ranges) or the Lead/Lag Amplifier which is an active low pass filter. A noise problem in the Lead/Lag Amplifier will be evident only during the zeroing sequence.

DC Amplifier, Lead/Lag Amplifier, and Servo Amplifier

Measure the dc input and output voltages. Verify that the amplifier outputs respond properly to the inputs. For troubleshooting operational amplifiers refer to Linear Integrated Circuits in Section VIII. A Servo Amplifier problem will be evident only during the Sensor-Zero sequence.

Auto Zero Assembly

The normal value range of the offset error voltage at A3A1, pin 5 is about −14 to +14 mVdc. The power sensing device normally exhibits a slight positive output due to ambient temperature, therefore the normal correction voltage is slightly negative, hence −4 mVdc.

The voltage measured at A3TP6 will provide an indication of how long the charge is retained on A3A1C_A. The voltage should remain virtually unchanged (±1 mVdc) for 24 hours.

If any component in the A3A1 assembly is found to be defective, the entire assembly must be replaced.

A-D Converter Circuit

Set Power Meter to Watt Mode and apply a 1.0 mW input signal to Power Sensor. Check that Power Meter is on range 3 and A3TP4 (DC) should be approximately +1.0 Vdc. Check A3TP2 (RMP) for a 0 to −7.0 volt ramp with a time of approximately 33.3 ms. If ramp does not reach −7.0 volts with 1.0 Vdc at A3TP4 (DC), check that LRIN instruction on XA3 pin 24 is pulsed low for 33.3 ms to turn transistors A3Q11 and A3Q12 off and FET A3Q13 on. Check that ramp at A3TP2 decreases from −7 volts to 0 volts at a linear rate. Check −VR at collector of A3Q17, approximately −6.2 Vdc and +VR at A3U5B pin 7, approximately +6.2 Vdc. The LRP instruction on XA3 pin 25 is pulsed low in the Watt Mode to turn transistors A3Q1 and A3Q6 off and FET A3Q16 on causing a positive linear ramp to be generated. The LRM instruction on XA3 pin 26 is pulsed low in the Watt Mode to turn transistors A3Q2 and A3Q7 off and FET A3Q15 on causing a negative linear ramp to be generated. LRM and LRP instructions remain high when dBm, dB [REF], or dB (REL) Modes are selected.

Set Power Meter to dBm Mode and apply a 1.0 mW input signal to Power Sensor. Check that ramp at A3TP2 decreases from −7.0 volts to threshold (reference) level at a log rate. Check that LLGR and LRL instructions on XA3 pins 3 and 4 respectively are pulsed low in dBm, dB [REF], and dB (REL) Modes. The LRL instruction turns transistors A3Q4 and A3Q9 off and FET A3Q19 on applying the LOG REF (Threshold) signal to A3U2 pin 3. The output of A3U1 pin 6 must discharge past this level before the voltage at A3TP3 (YPLS) can switch to 0 volts. LLGR and LRL instructions remain high in the Watt Mode.

Check that the LAZO instruction at XA3 pin 2 is pulsed low. This turns transistors A3Q5 and A3Q10 off and turns FETs A3Q14 and A3Q20 on causing A3TP3 (YPLS) to be +2.0 volts dc during the A-D Converter's Auto-Zero cycle.

A3TP3 (YPLS) is at +5 volts while the ramps are discharging, at 0 Vdc when the Comparator, A3U2, switches from high to low, and at +2 Vdc during the A-D Auto-Zero cycle.

The time that each instruction remains low is determined by the program.

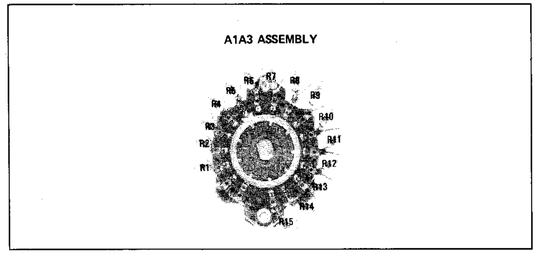

Figure 8-31. A1A3 CAL FACTOR % Switch Assembly Component Locations

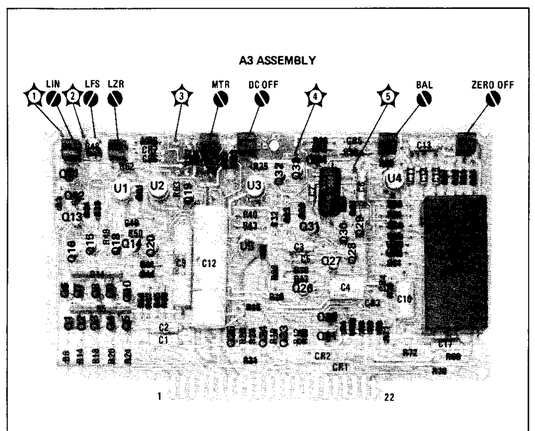

Figure 8-32. A3 A-D Converter Assembly Components, Test Point, and Adjustment Locations

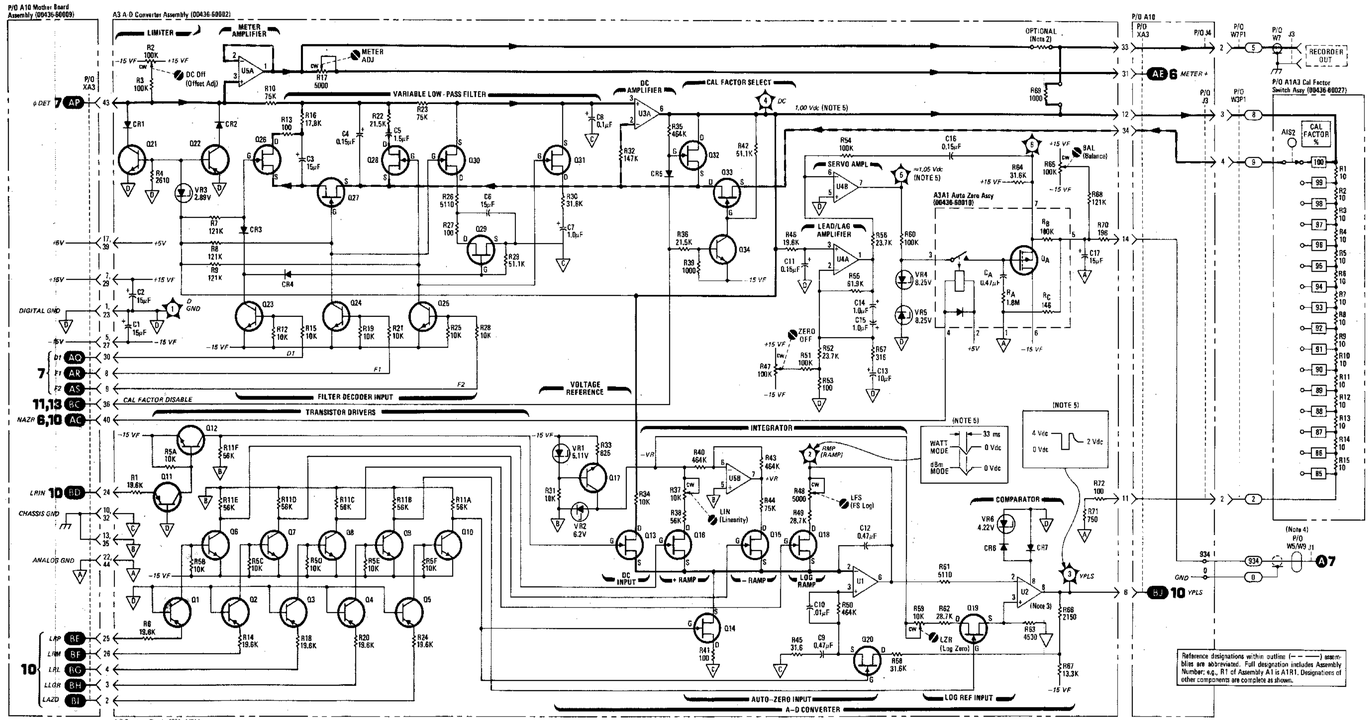

Figure 8-33. A-D Converter Assembly Schematic Diagram

NOTES

1. Unless otherwise indicated:
   Resistance in ohms;
   Capacitance in picofarads.
2. Standard connections shown for R69, optional connection is between XA3-33 and A3J5-A-1.
3. Pins 1 and 5 cut off.
4. W5 (unmated on Option 003); W8 (Option 003); W5, W9 connected in parallel (Option 080)
5. For voltage and waveforms shown, controls are set as follows:
   RANGE . . . . . 1 mW
   CAL FACTOR % . . . 100
   POWER REF . . . . ON
   Connect POWER SENSOR to POWER REF OUTPUT.

REFERENCE DESIGNATIONS

NO PREFIX	A3 ASSY
J1,3 W5/W9,W7 W3P1 W7P1	C1-17 CR1-7 Q1-34 R1-72 TP1-6 U1-5 VR1-6
A1 ASSY	
S2	A10 ASSY
A1A3 ASSY	J3,4 XA3
R1-15	

TRANSISTOR AND INTEGRATED CIRCUIT PART NUMBERS

REFERENCE DESIGNATIONS	PART NUMBER
Q1-6,11,22 Q8-10,12,17 21,23-29,34 Q13-15,18,19, 20,26-33. U1,3 U2 U4,5	1853-0020 1854-0071 1854-0414 1826-0102 1820-0223 1826-0092

INTEGRATED CIRCUITS VOLTAGE CONNECTIONS

REFERENCE DESIGNATIONS	PIN NUMBER
U1-3	–15 VF – 4 +15 VF – 7
U4,5	–15 VF – 4 +15 VF – 8

Reference designations within outline (— — —) assemblies are abbreviated. Full designation includes Assembly Number; e.g., R1 of Assembly A1 is A1R1. Designations of other components are complete as shown.

SERVICE SHEET 9

CIRCUIT DESCRIPTIONS

The circuits described in Service Sheet 9 are covered on Service Sheets 1 and 3 and Troubleshooting in paragraphs 8-55 through 8-62.

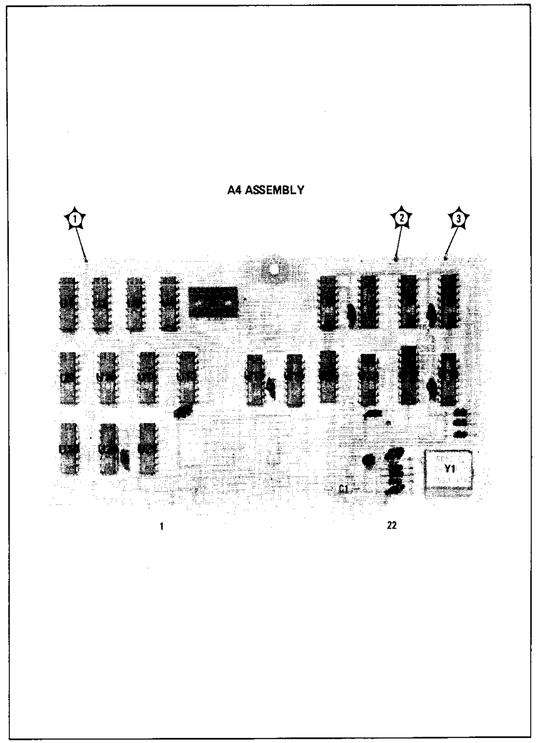

Figure 8-34. A4 Counter Relative Assembly Component and Test Point Locations

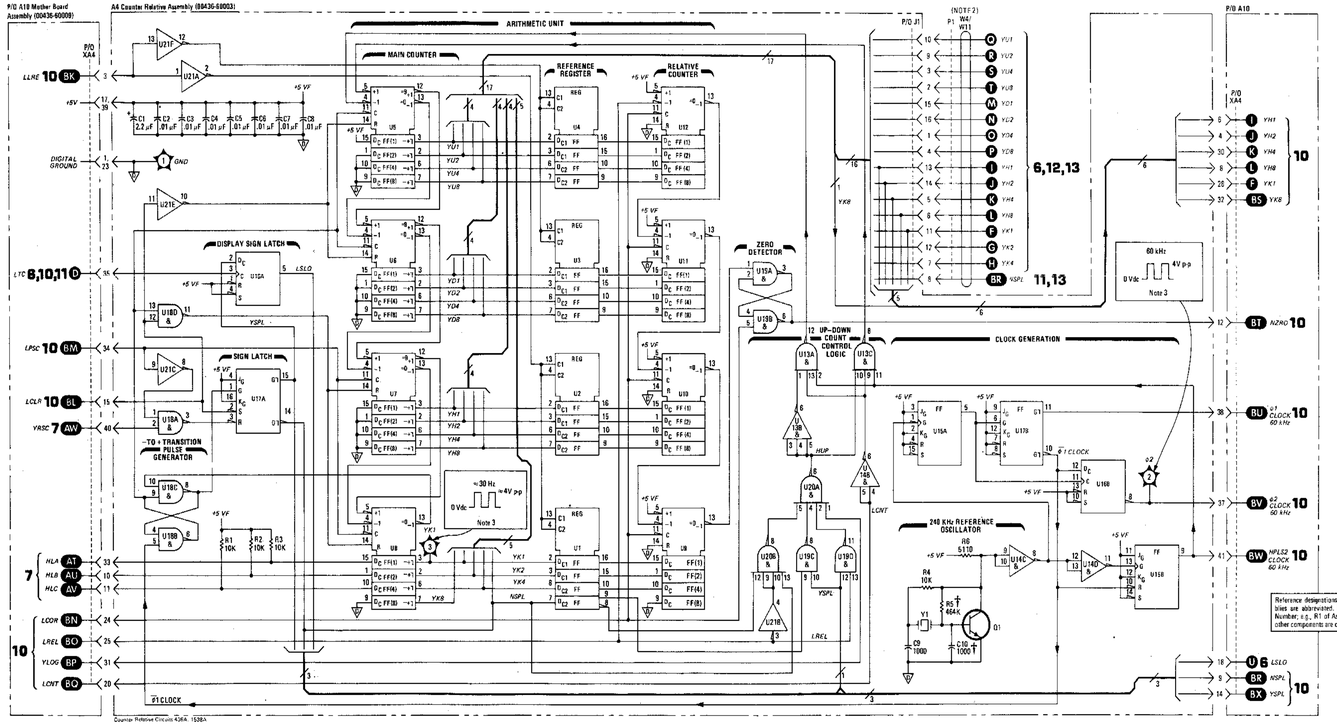

NOTES

1. Unless otherwise indicated:
   Resistance in ohms;
   Capacitances in picofarads.
2. W4 (omitted on Options 22, 24)
   W11 (with Options 22, 24).
3. For voltages and waveforms shown, controls are set as follows:
   RANGE . . . . . 1 mW
   CAL FACTOR % . . . 100%
   POWER REF . . . . . ON

Connect POWER SENSOR to POWER REF OUTPUT.

REFERENCE DESIGNATIONS

A4 ASSY	A10 ASSY
C1 – 10	XA4
J1	
Q1	NO PREFIX
R1 – 6	
TP1 – 3	P1
U1 – 21	W4/W11
Y1	

TRANSISTOR AND INTEGRATED CIRCUIT PART NUMBERS

REFERENCE DESIGNATIONS	PART NUMBER
Q1	1854-0071
U1–4	1820-1411
U5–12	1820-0546
U13	1820-1202
U14, 18, 19	1820-1197
U15	1820-1212
U16	1820-0077
U17	1820-0816
U20	1820-1204
U21	1820-1195

INTEGRATED CIRCUIT VOLTAGE AND GROUND CONNECTIONS

REFERENCE DESIGNATIONS	P/N NUMBER
U1 4	+5 VF –5 ▽ –12
U5–12, 15	+5 VF 16 ▽ –8
U13, 14, 15, 18–21	+5 VF –14 ▽ –7
U17	+5 VF –5 ▽ –13

† See backdating information in section VIII.

Reference designations within outline (— — —) assemblies are abbreviated. Full designation includes Assembly Number; e.g., R1 of Assembly A1 is A1R1. Designations of other components are complete as shown.

Figure 8-35. Counter Relative Assembly Schematic Diagram

SERVICE SHEET 10

CIRCUIT DESCRIPTIONS

The circuits described in Service Sheet 10 are covered on Service Sheets 1 and 3 and Trouble-shooting in paragraphs 8-55 through 8-62.

Counter Relative Assembly (A4)
SERVICE SHEET 9

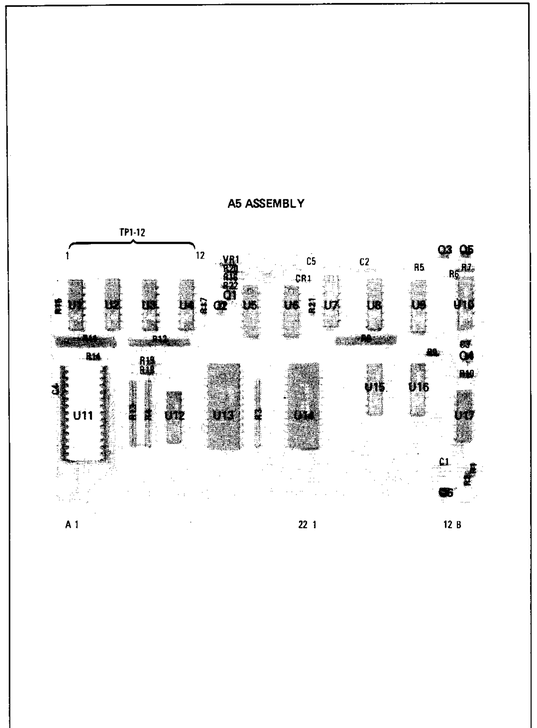

Figure 8-36. A5 Controller Assembly Component and Test Point Locations

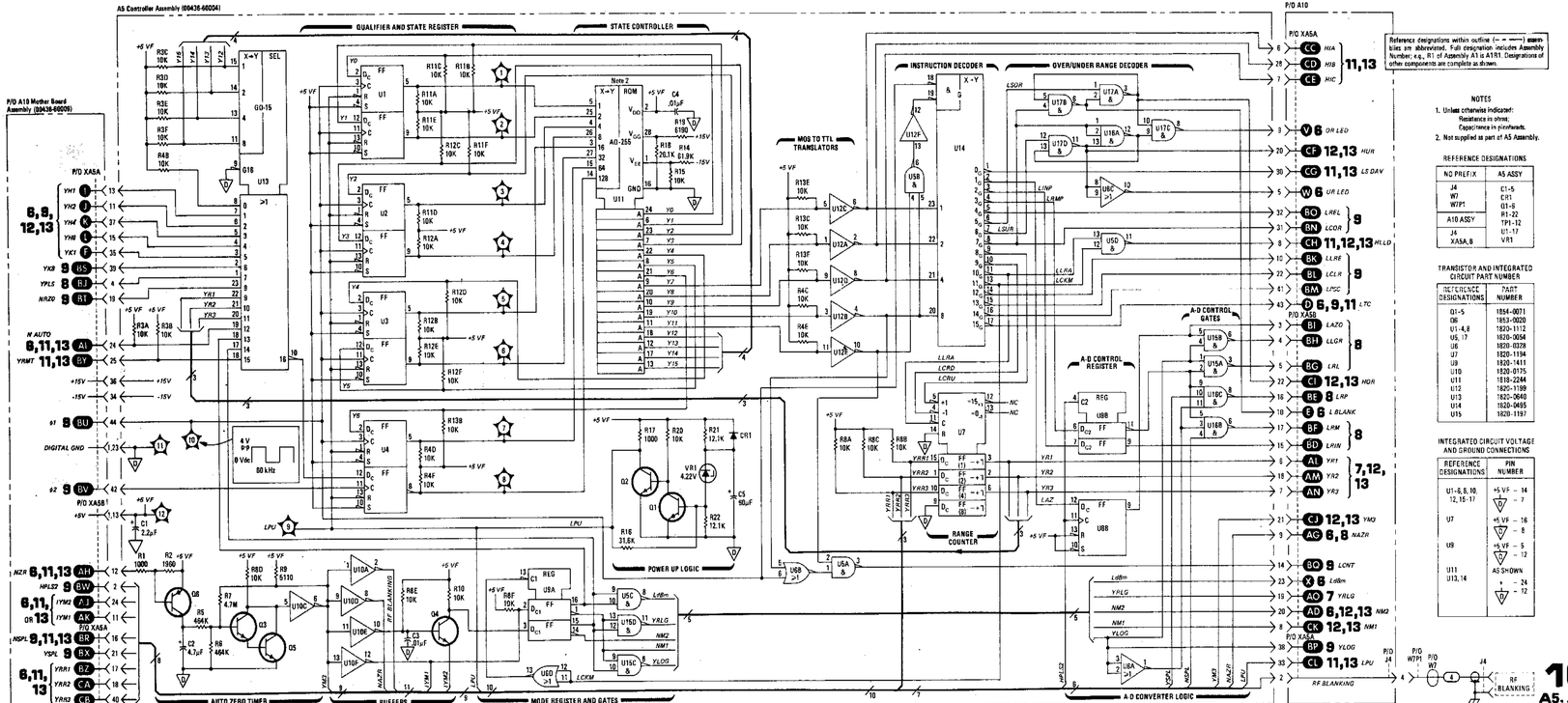

Figure 8-37. Controller Assembly Schematic Diagram

SERVICE SHEET 11

CIRCUIT DESCRIPTIONS

The circuits described in Service Sheet 11 are covered in paragraphs 8-114 through 8-161, HP-IB Instrument Checkout in paragraphs 8-63 through 8-66, Troubleshooting in Table 8-4, and HP-IB Verification Programs in Figures 8-16 and 8-17.

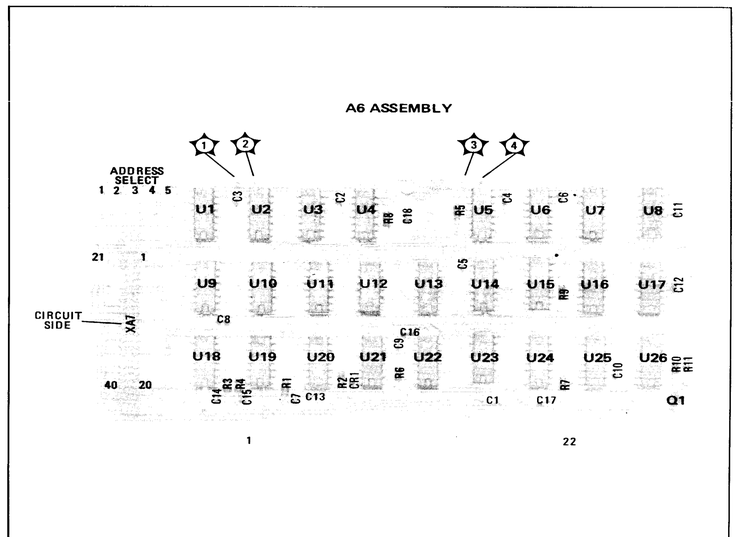

Figure 8-38. A6 HP-IB (Option 022) Control Assembly Component and Test Point Locations

Controller Assembly (A5)
SERVICE SHEET 10

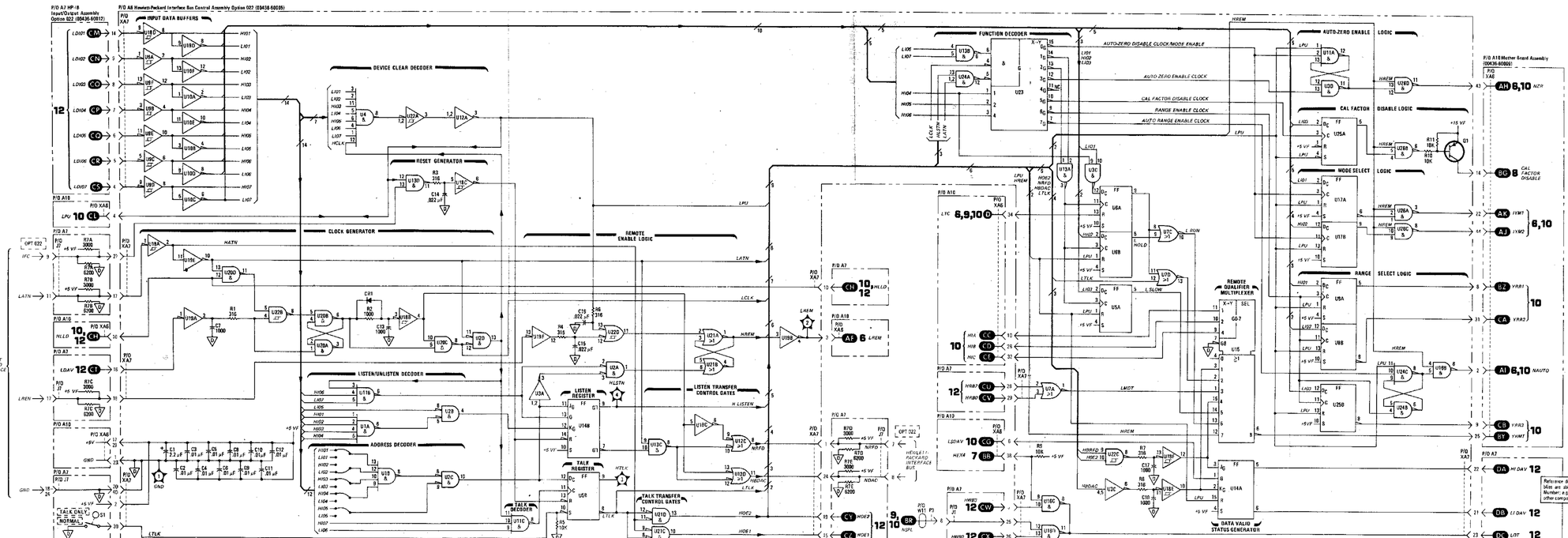

NOTES

1. Unless otherwise indicated: Resistance in ohms, Capacitance in microfarads.

REFERENCE DESIGNATIONS

A6 ASSY	A7 ASSY
C1–19	J1, 7
C31	H1
Q1	S1
R1–11	XA6
TP1–4	A10 ASSY
U1, 26	XA6
XA7	NO PREFIX
	P5
	W11

TRANSISTOR AND INTEGRATED CIRCUIT PART NUMBERS

REFERENCE DESIGNATIONS	PART NUMBER
Q1	1853-0020
U1	1820-1206
U2, 7, 21	1820-1144
U3, 13, 20	1820-1131
U4	1820-1231
U5, 6, 8, 17, 23	1820-1112
U9, 18	1820-1053
U10, 15	1820-1195
U11, 24	1820-1202
U12	1826-0527
U14	1820-1212
U15	1820-1208
U16, 26	1820-1156
U27	1820-1016
U28	1820-1216

INTEGRATED CIRCUIT VOLTAGE AND GROUND CONNECTIONS

REFERENCE DESIGNATIONS	PIN NUMBER
U1-13, 15-22, 24-26	+5 V = 14 ⏚ = 7
U14, 23	+5 V = 16 ⏚ = 8

Reference designations within outline (— — —) assemblies are abbreviated. Full designation includes Assembly Number; e.g., R1 of Assembly A1 is A1R1. Designations of other components are complete as shown.

11
A6,A7,A10

Figure 8-39. HP-IB (Option 022) Control Assembly Schematic Diagram

SERVICE SHEET 12

CIRCUIT DESCRIPTIONS

The circuits described in Service Sheet 12 are covered in paragraphs 8-111 through 8-154, HP-IB Instrument Checkout in paragraphs 8-63 through 8-66, Troubleshooting in Table 8-4, and HP-IB Verification Programs in Figures 8-16 and 8-17.

◀ HP-IB (Option 022) Control Assembly (A6)
SERVICE SHEET 11

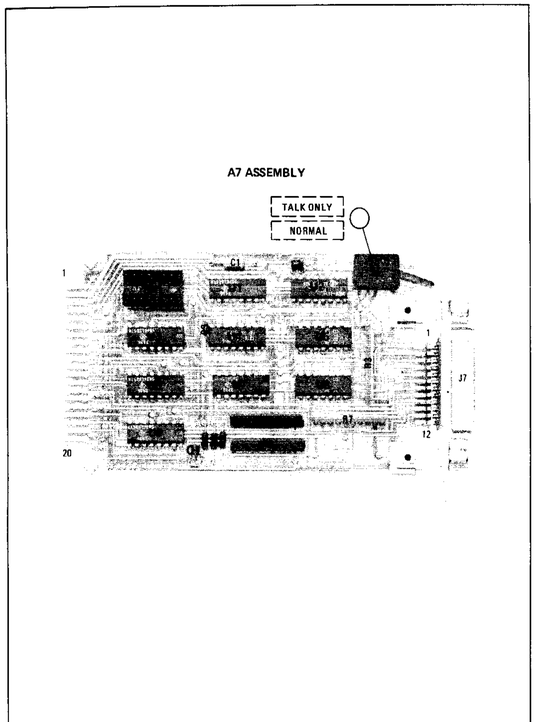

Figure 8-40. A7 HP-IB (Option 022) Input/Output Assembly Component and Test Point Locations

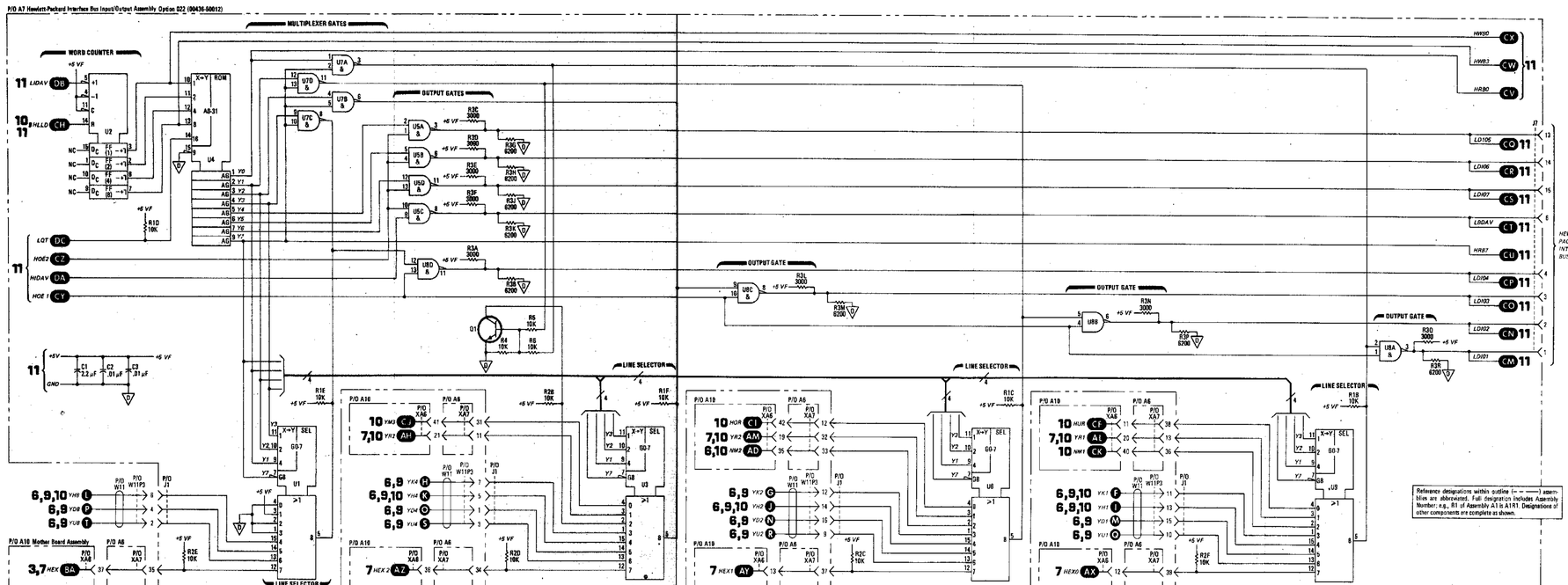

Figure 8-41. HP-IB (Option 022) Input/Output Assembly Schematic Diagram

SERVICE SHEET 13

CIRCUIT DESCRIPTIONS

The circuits described in Service Sheet 13 are covered in paragraphs 8-155 through 8-163, BCD Instrument Checkout in paragraphs 8-67 through 8-69 and on Table 8-5.

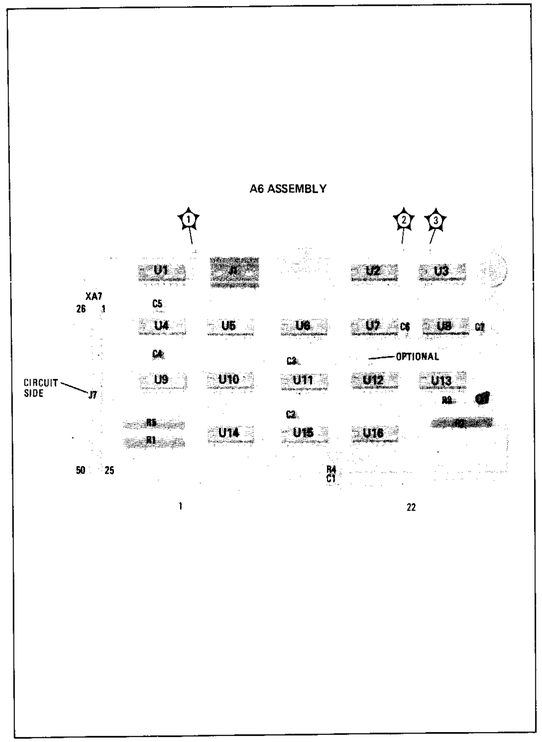

Figure 8-42. A6 BCD Interface Control (Option 024) Assembly Component and Test Point Locations

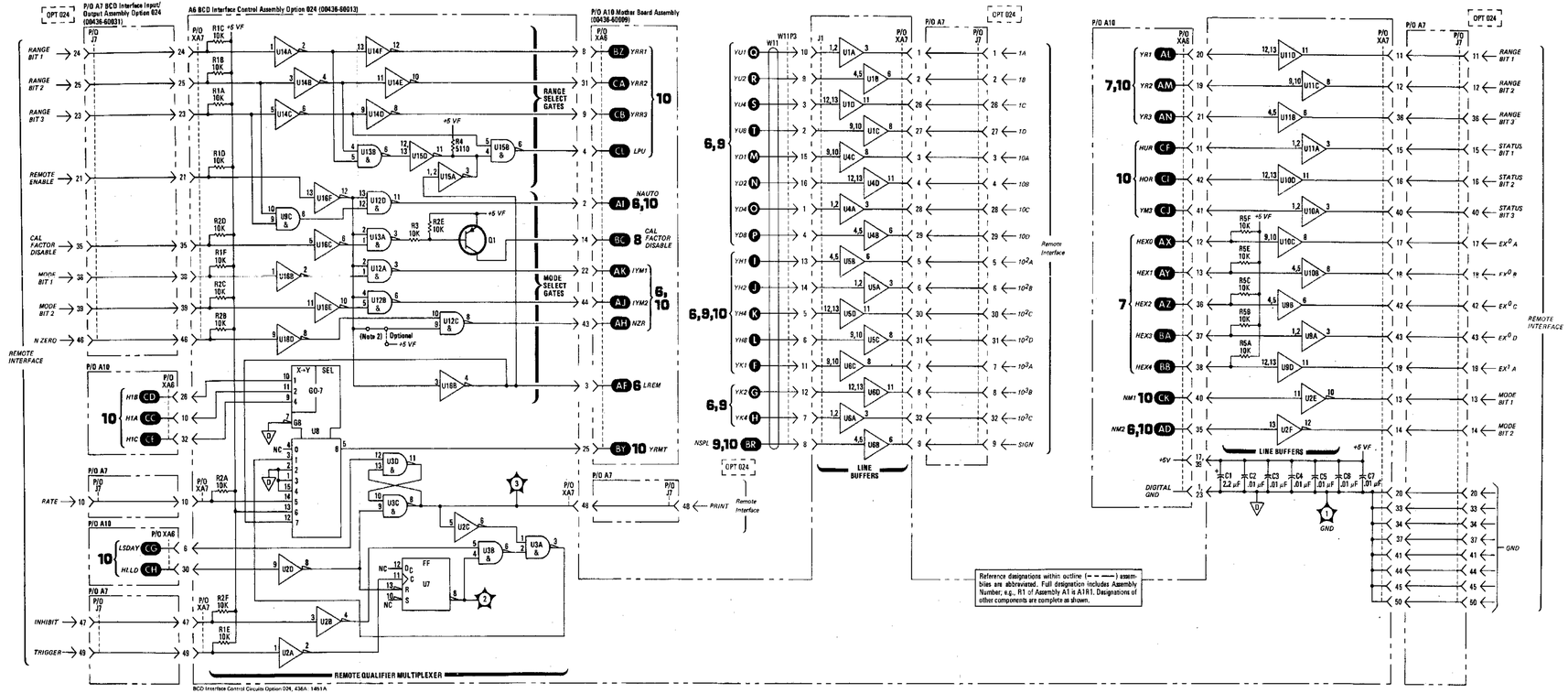

Figure 8-43. BCD Interface Control (Option 024) Assembly Schematic Diagram

NOTES

1. Unless otherwise indicated:
   Resistance in ohms;
   Capacitance in picofarads.
2. Normal connection shown: Optional connection allows sensor auto zero function to be selected remotely regardless of the state of the remote enable input.

REFERENCE DESIGNATIONS

NO PREFIX	A6 ASSY
WT1 W11P3	C1-7 J1 Q1
A7 ASSY	R1-5 TP1-3
J7	U1-16 XA7
A10 ASSY	
XA6	

INTEGRATED CIRCUIT VOLTAGE AND GROUND CONNECTIONS

REFERENCE DESIGNATIONS	PIN NUMBER
U1-7, 9-16	+5 VF – 14 ▽ – 7
U8	+5 VF – 16 ▽ – 8

TRANSISTOR AND INTEGRATED CIRCUIT PART NUMBERS

REFERENCE DESIGNATIONS	PART NUMBER
Q1	1853-0020
U1,4-6,9-11	1820-1201
U2,14,16	1820-1199
U3,13	1820-1197
U7	1820-1112
U8	1820-1208
U12	1820-1198
U15	1820-0821

13
A6, A7, A10

SERVICE SHEET 14

General

The A8 assembly provides a 50 ± 5 MHz output at 1 mW ± 0.7%. The oscillator's output is held constant by an ALC loop made up of a peak detector CR2 and comparator U2. The comparator reference input is from a very stable +5V power supply composed of U1, VR2 and their associated components. The LEVEL control R4 sets the comparator reference which controls the oscillator feedback level and thereby controls the A8 assembly POWER REF OUTPUT level. The oscillator's frequency is set by adjusting the FREQ ADJ control L1.

50 MHz Oscillator

The oscillator circuit is made up of common-emitter amplifier Q1 and its associated components. Resistors R12, R13, R14, and R15 bias Q1 for an emitter current of approximately 5 mA. The π-network tuned circuit, C11, C13, C14, and L1 determines the operating frequency. The amplifier gain is set by the operating circuit impedance across the tuned circuit and the emitter resistor R14 (which is ac coupled to ground by C12). The positive feedback required to sustain oscillation is satisfied in this circuit. Phase shift of 180° is a characteristic of both common-emitter amplifiers and π-network tuned circuits. This feedback is coupled through C9 and C10, back to the base of Q1. The FREQ ADJ control L1 sets the oscillator's frequency.

ALC Loop

At the positive peak of each cycle, current momentarily flows from the feedback loop through peak detector diode CR2 to C7. The resultant stored charge is coupled, as a dc input voltage, to pin 3 of U2. The peak detector's output is compared to the very stable reference input by comparator U2. Any difference between the comparator's input voltages produces an error voltage at the dc output. The comparator's output is coupled to a reactance voltage divider, capacitor C9 and varactor CR3. As the error output voltage goes more positive, the capacitive reactance of CR3 decreases, which reduces the oscillator feedback. Conversely, a more negative output voltage will increase the feedback. For example, if the oscillator output were to suddenly increase, the peak detector's output would become more positive. The comparator's output would become more positive, a lower CR3 reactance would decrease the feedback to Q1 which forces the oscillator's output level back to its original level. If the R4 LEVEL control were adjusted for a more positive reference voltage, the comparator's output would go more negative, the feedback would increase, allowing the oscillator's output to increase. Therefore, the peak detector's output would increase until it equals the comparator's reference level input, thus establishing a higher leveled-output signal from the oscillator.

SERVICE SHEET 14 (cont'd)

Frequency shaping components R9, R10, R11, and C8 determine the upper limit of frequency response of the ALC loop which prevents spurious oscillations.

+5V Power Supply

A8VR2 provides a reference voltage of −6.2 Vdc to the power supply reference amplifier A8U1. The gain of the reference amplifier is set by R3, R4, and R5 and is approximately −0.8 with R3 centered. The very stable output is coupled through CR1 as the reference voltage input to comparator U2. Diode CR1 provides temperature compensation for CR2.

TROUBLESHOOTING

General

Before trying to troubleshoot the A3 Assembly, verify the presence of +15 Vdc and −15 Vdc on the circuit board.

If a defect in the A8 Assembly is isolated and repaired, the correct output level (1 mW ± 0.7%) must be set by a very accurate power measurement system. Hewlett-Packard employs a special system, accurate to ±0.5% and traceable to the National Bureau of Standards. When setting the power level, a transfer error of ±0.2% is introducted making the total error ±0.7%. If a system this accurate is availabe it may be used to set the proper output level. Otherwise, Hewlett-Packard recommends returning the Power Meter so it can be reset at the factory. Contact your nearest Hewlett-Packard office for more information.

50 MHz Oscillator

Malfunctions of the oscillator circuit will occur as a wrong output frequency or as an abnormal output level. The voltage at TP2 will indicate if the ALC loop is trying to compensate for an incorrect output level.

Modulation of the 50 MHz signal or spurious signals, which are part of the output, may be caused by defects in R9, R10, R11, or C8 in the ALC loop.

ALC Loop and Power Supply

Isolating problems in the ALC Loop and Power Supply circuits may be quickly isolated by measuring dc voltages at the inputs and outputs of the integrated circuits.

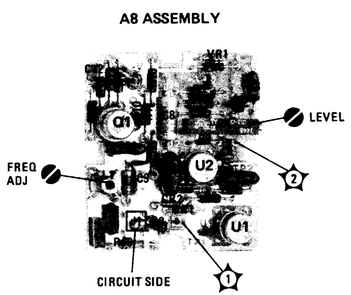

Figure 8-44. A8 Power Reference Oscillator Assembly Component, Test Point, and Adjustment Locations

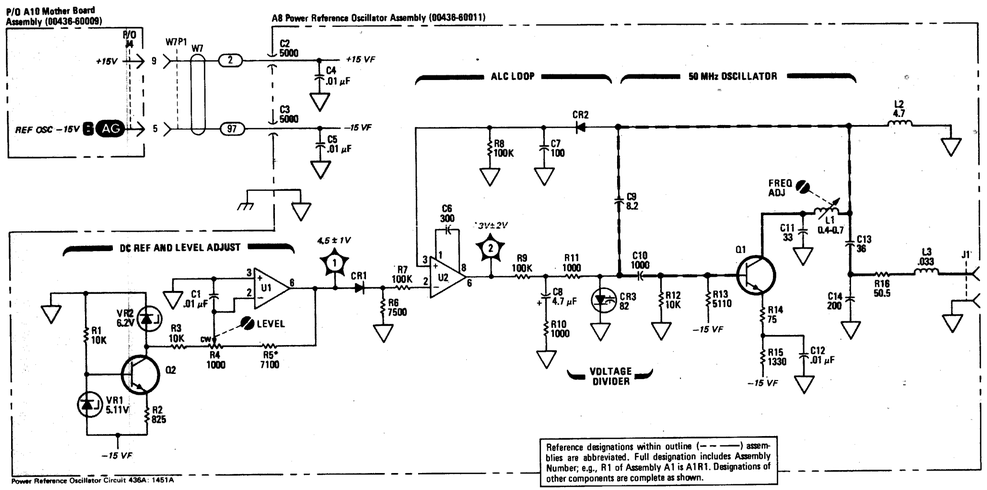

NOTES

1. Unless otherwise indicated:
   Resistance in ohms;
   Capacitance in picofarads;
   Inductance in microhencires.
2. Asterisk (*) indicates selected component, average values shown.
3. W6 (omitted option 003)
   W10 (option 003).

REFERENCE DESIGNATIONS

NO PREFIX	A8 ASSY
J2 W6/W10 W7 W6P1/W10P1 W7P1	C1-14 CR1-3 J1 L1-3 Q1,2 R1-6
A10 ASSY	TP1,2 U1,2 VR1
J4	

TRANSISTOR AND INTEGRATED CIRCUIT PART NUMBERS

REFERENCE DESIGNATIONS	PART NUMBER
Q1	1854-0247
Q2	1854-0071
U1	1826-0013
U2	1820-0223

INTEGRATED CIRCUIT VOLTAGE CONNECTIONS

REFERENCE DESIGNATIONS	PIN NUMBER
U1,2	+15 VF – 7 –15 VF – 4

Figure 8-45. Power Reference Oscillator Assembly Schematic Diagram

SERVICE SHEET 15

CIRCUIT DESCRIPTIONS

General

The Power Line Module (A11), the Power Transformer (T1), the Power Supply Rectifier and Regulator Assembly (A9), and the +5V Regulator provide the +5 Vdc, +15 Vdc, and -15 Vdc voltages for the operation of the Power Meter.

Power Line Module and Transformer

The Power Meter requires a power source of 100, 120, 220, or 240 Vac, +5% -10%, 48 to 440 Hz, single phase. The Power Meter consumes about 20 watts of power. The line (mains) voltage selection is accomplished through the proper selection of A11TB1. (See paragraph on Line Voltage Selection in Section II of this manual.) The Power Transformer (T1) provides the proper voltages to the Power Supply Rectifier and Regulator Assembly (A9) and the +5V Regulator (U1) from the various line (mains) voltages.

Power Supply Rectifier and Regulator Assembly

Diodes A9CR3 through A9CR6 comprise a bridge rectifier circuit with capacitors A9C1 and A9C2 providing filtering for the rectified voltages. The filtered dc voltages are applied to the $+V_{IN}$ (A9TP2) and $-V_{IN}$ (A9TP1) inputs of the Dual-Voltage Regulator (A9U1). The +15V (A9TP4) and -15V (A9TP3) outputs of the Dual-Voltage Regulator track each other. Fuses A9F1 and A9F2 provide protection for the Power Transformer.

Diodes A9CR1 and A9CR2 provide full-wave rectification of the voltage at A9TP6 to be applied to the +5V Regulator. Fuse A9F3 provides protection for diodes A9CR1 and A9CR2 and the Power Transformer.

+5V Regulator

The +5V Regulator (U1) is mounted on the rear panel for heat-sinking purposes. Capacitors C1 and C2 provide filtering for the input voltage to pin 1 of U1. The +5 Vdc output voltage of U1 is applied to a 6.2 volt zener diode (A10VR1) that provides over-voltage protection for the +5V supply. This protects the integrated circuits should the +5V supply go higher than 6.2 volts.

Power Reference Oscillator Assembly (A8)
SERVICE SHEET 14

TROUBLESHOOTING

WARNINGS

If this instrument is to be energized via an auto-transformer for voltage reduction, make sure the common terminal is connected to the earthed pole of the power source. BEFORE SWITCHING ON THIS INSTRUMENT, the protective earth terminals of this instrument must be connected to the protective conductor of the (mains) power cord. The mains plug shall only be inserted in a socket outlet provided with a protective earth contact. The mains plug shall only be inserted in a socket outlet provided with a protective earth contact. The protective action must not be negated by the use of an extension cord (power cable) without a protective conductor (grounding).

Any interruption of the protective (grounding) conductor (inside or outside the instrument) or disconnecting the protective earth terminal is likely to make this instrument dangerous. Intentional interruption is prohibited.

Make sure that only fuses with the required rated current and of the specified type (normal blow, time delay, etc.) are used for replacement. The use of repaired fuses and the short-circuiting of fuse holders must be avoided.

Whenever it is likely that the protection offered by fuses has been impaired, the instrument must be made inoperative and be secured against any unintended operation.

Any adjustment, maintenance, and repair of the opened instrument under voltage should be avoided as much as possible and, when inevitable, should be carried out only by a skilled person who is aware of the hazard involved.
Adjustments and service described herein are performed with power supplied to the instrument while protective covers are removed. Energy available at many points may, if contacted, result in personal injury.

CAUTIONS

LINE VOLTAGE SELECTION

BEFORE SWITCHING ON THIS INSTRUMENT, make sure the instrument is set to the voltage of the power source.

BEFORE SWITCHING ON THIS INSTRUMENT, ensure that all devices connected to this instrument are connected to the protective (earth) ground.

BEFORE SWITCHING ON THIS INSTRUMENT, ensure that the line power (mains) plug is connected to a three-conductor line power outlet that has a protective (earth) ground. (Grounding one conductor of a two-conductor outlet is not sufficient.)

Set the LINE ON-OFF switch to OFF and remove the Line Power Cord (W8) from the Line Power Module (A11). Remove the red (2), violet (7), and white-red (92) wires from the feed-thru capacitors (C3, C4, and C5). Replace the Line Power Cord (W8) and set LINE ON-OFF to ON. If the supply voltages are now correct, the trouble is not in the Power Supply. If the +5V supply is still too low or too high, U1 is probably at fault. If either the +15V or -15V supplies are the source of trouble, the complete unit (U1) must be replaced. Any other problems can be solved with the aid of a VOM.

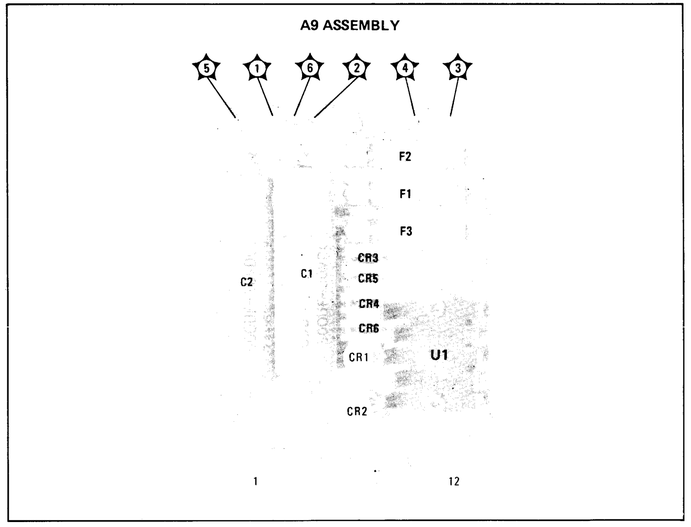

Figure 8-46. A9 Power Supply Rectifier and Regulator Assembly Component and Test Point Locations

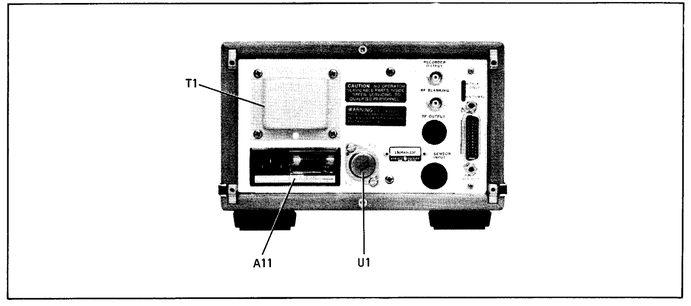

Figure 8-47. Rear Panel Mounted Power Supply Component Locations

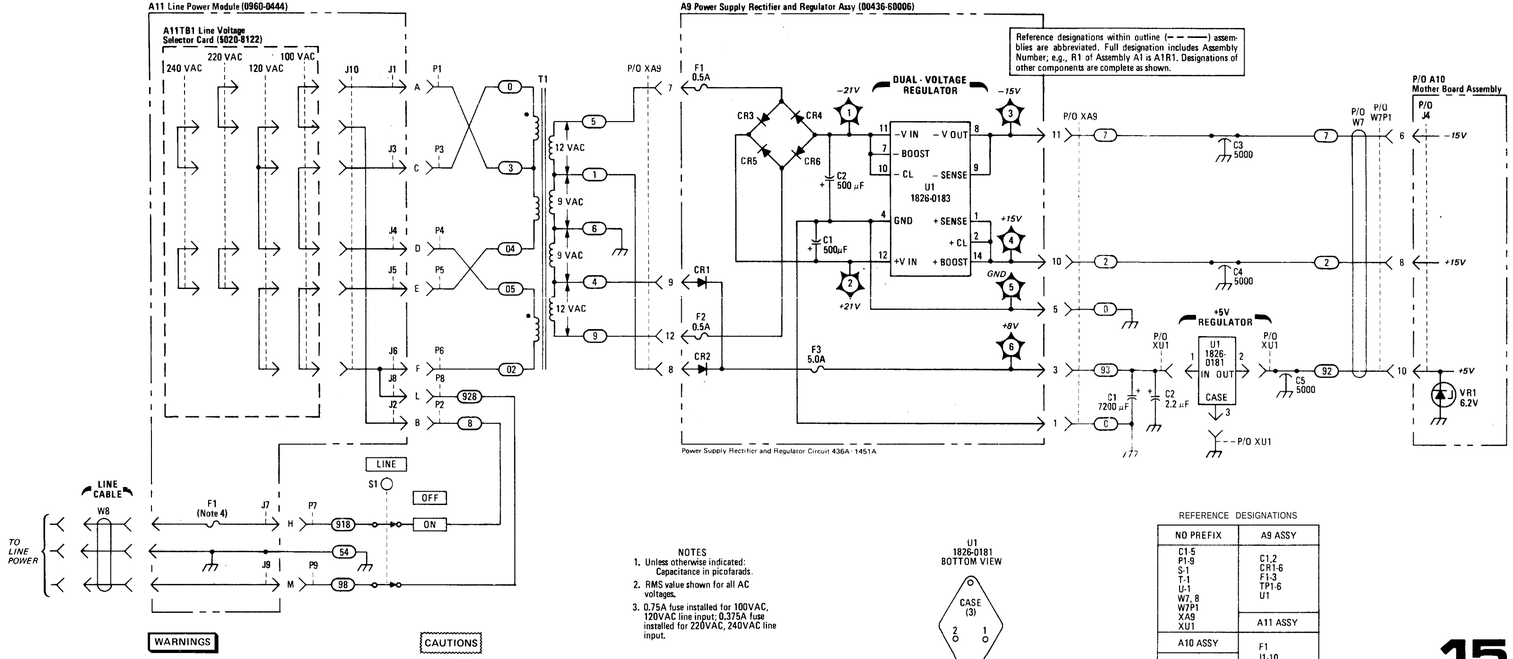

NOTES
1. Unless otherwise indicated: Capacitance in picofarads.
2. RMS value shown for all AC voltages.
3. 0.75A fuse installed for 100VAC, 120VAC line input; 0.375A fuse installed for 220VAC, 240VAC line input.

U1 1826-0181 BOTTOM VIEW

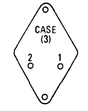

REFERENCE DESIGNATIONS

NO PREFIX	A9 ASSY
C1-5 P1-9 S1 T1 U1 W7, 8 W7P1 XA9 XU1	C1,2 CR1-6 F1-3 TP1-6 U1
	A11 ASSY
A10 ASSY	F1 J1-10
J4 VR1	

WARNINGS

Any interruption of the protective (grounding) conductor (inside or outside rhe instrument) or disconnecting the protective earth terminal is likely to make this instrument dangerous. Intentional interruption is prohibited.

Any adjustment, maintenance, and repair of the opened instrument under voltage should be avoided as much as possible and, when inevitable, should be carried out only by a skilled person who is aware of the hazard involved.

CAUTIONS

Before switching on this instrument, make sure the instrument is set to the voltage of the power source.

Before switching on this instrument, ensure that all devices connected to this instrument are connected to the protective (earth) ground.

Before switching on this instrument, ensure that the line power (mains) plug is connected to a three-conductor line power outlet that has a protective (earth) ground. (Grounding one conductor of a two-conductor outlet is not sufficient.)

Figure 8-48. Power Supply Rectifier and Regulator Assembly Schematic Diagram

Power Supply Rectifier and Regulator
Assembly (A9, A10)
SERVICE SHEET 15

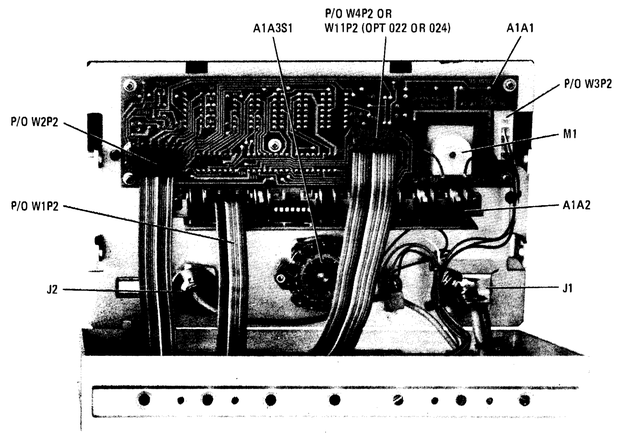

Figure 8-49 Rear View of Front Panel (Removed)

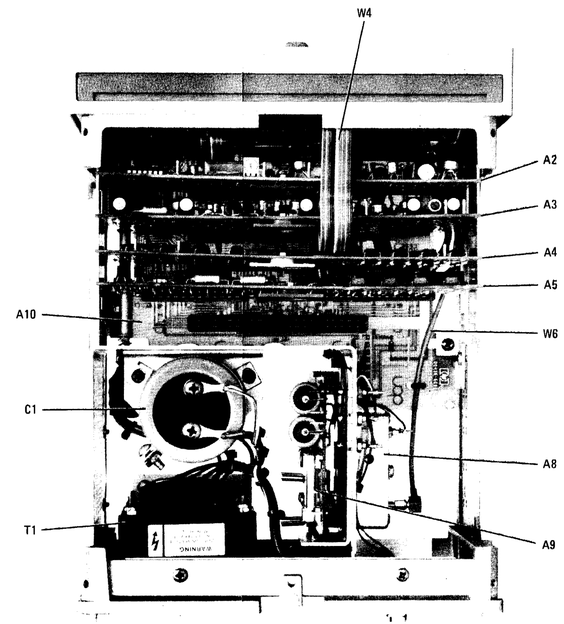

Figure 8-50 Top Internal View Standard Instrument

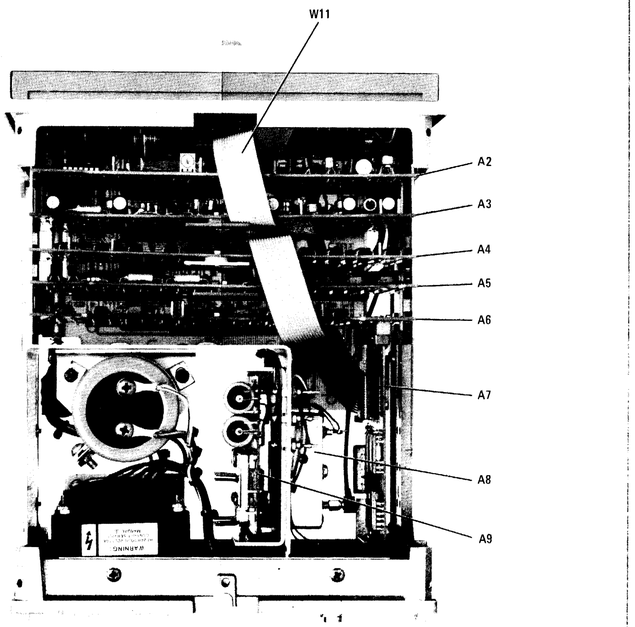

Figure 8-51 Top Internal View HP-IB or BCD Interface

HEWLETT hp PACKARD

SALES & SERVICE OFFICES

AFRICA, ASIA, AUSTRALIA

ANGOLA
Telectra
Empresa Técnica de Equipamentos Eléctricos, S.A.R.L.
R. Barbosa Rodrigues 42 r/DT
Caixa Postal 6487
Luanda
Tel. 35515/6
Cable TELECTRA Luanda

AUSTRALIA
Hewlett-Packard Australia Pty. Ltd
31-41 Joseph Street
Blackburn, Victoria 3130
P.O. Box 36
Doncaster East, Victoria 3109
Tel. 895-0301
Telex: 31-024
Cable: HEWPARD Melbourne

Hewlett-Packard Australia Pty. Ltd
31 Bridge Street
Pymble
Nw South Wales, 2073
Tel. 449-6566
Telex: 21561
Cable: HEWPARD Sydney

Hewlett-Packard Australia Pty. Ltd
153 Greenhill Road
Parkside, S.A. 5063
Tel. 272-5911
Telex: 82536 ADEL
Cable: HEWPARD ADELAIDE

Hewlett-Packard Australia Pty. Ltd
141 Stirling Highway
Nedlands, W.A. 6009
Tel. 86-5455
Telex: 93859 PERTH
Cable: HEWPARD PERTH

Hewlett-Packard Australia Pty. Ltd
121 Wollongong Street
Fyshwick, A.C.T. 2609
Tel. 95-2733
Telex: 62500 Canberra
Cable: HEWPARD CANBERRA

Hewlett-Packard Australia Pty. Ltd
5th Floor
Teachers Union Building
495-499 Boundary Street
Spring Hill, 4000 Queensland
Tel. 229-1544
Cable: HEWPARD Brisbane

GUAM
Medical/Pocket Calculators Only
Guam Medical Supply, Inc.
Jay East Building, Room 210
P.O. Box 8947
Tamuning 96911
Tel. 646-4513
Cable: EARMED Guam

HONG KONG
Schmidt & Co (Hong Kong) Ltd.
P.O. Box 297
Connaught Centre
39th Floor
Connaught Road, Central
Hong Kong
Tel. H 235291-5
Telex: 74766 SCHMC HX
Cable: SCHMIDTCO Hong Kong

INDIA
Blue Star Ltd
Kasturi Buildings
Jamshedji Tata Rd
Bombay 400 020
Tel. 29 50 21
Telex: 2812
Cable: BLUEFROST

Blue Star Ltd
Sahas
414/2 Vir Savarkar Marg
Prabhadevi
Bombay 400 025
Tel. 45 78 87
Telex: 4093
Cable: FROSTBLUE

Blue Star Ltd
Band Box House
Prabhadevi
Bombay 400 025
Tel. 45 73 01
Telex: 011-3751
Cable: BLUESTAR

Blue Star Ltd
14/40 Civil Lines
Kanpur 208 001
Tel. 6 88 82
Telex: 292
Cable: BLUESTAR

Blue Star Ltd
7 Hare Street
P.O. Box 506
Calcutta 700 001
Tel. 23-0131
Telex: 7655
Cable: BLUESTAR

Blue Star Ltd
7th & 8th Floor
Bhandari House
91 Nehru Place
New Delhi 110024
Tel. 634770 & 635166
Telex: 2463
Cable: BLUESTAR

Blue Star Ltd
Blue Star House
11/11A Magarath Road
Bangalore 560 025
Tel. 55668
Telex: 430
Cable: BLUESTAR

Blue Star Ltd
Meeakshi Mandiran
xxx/1678 Mahatma Gandhi Rd
Cochin 682 016
Tel. 32069, 32161, 32282
Telex: 046-514
Cable: BLUESTAR

Blue Star Ltd
11-1137
Sarojini Devi Road
Secunderabad 500 003
Tel. 70126, 70127
Cable: BLUEFROST
Telex: 459

Blue Star Ltd
3-34 Kasturi Sankar High Road
Madras 600034
Tel. 82056
Telex: 041-379
Cable: BLUESTAR

Blue Star Ltd
Nathraj Mansions
2nd Floor Bistupur
Jamshedpur 831 001
Tel. 7281
Cable: BLUESTAR
Telex: 240

INDONESIA
BERCA Indonesia P.T.
P.O. Box 496
1st Floor Jl. Cikini Raya 61
Jakarta
Tel. 56038, 40369, 49886
Telex: 47895
Cable: BERCACON

BERCA Indonesia P.T.
63 Jl. Raya Gubeng
Surabaya
Tel. 44309

ISRAEL
Electronics & Engineering Div. of Motorola Israel Ltd
17, Kremenetski Street
P.O. Box 25016
Tel-Aviv
Tel. 38973
Telex: 33569
Cable: BASTEL Tel-Aviv

JAPAN
Yokogawa-Hewlett-Packard Ltd
Shinbi Building
59-1 Yoyogi 1-Chome
Shibuya-ku, **Tokyo** 151
Tel. 03-370-2281/92
Telex: 232-2024YHP
Cable: YHPMARKET TOK 23-724

Yokogawa-Hewlett-Packard Ltd
Sasaki Building
2-24-1 Tsuruya-cho
Kanagawa-ku
Yokohama, 221
Tel. 045-312-1252
Telex: 382 3204 YHP YOK

Yokogawa Hewlett-Packard Ltd
Moto Mitsi Building
105, Ohome 1-Chome
Mito, Ibaraji 310
Tel. 0292-25-7470

Yokogawa-Hewlett-Packard Ltd
Inoue Building
1348-3 Asahi-cho 1-chome
Atsugi, Kanagawa 243
Tel. 0462-24-0452

Yokogawa Hewlett-Packard Ltd
Kimura Building
3rd Floor 20
2-chome Tsukuba
Kumagaya, Saitama 360
Tel. 0485-24-6563

KENYA
Technical Engineering Services (E.A.)Ltd.
P.O. Box 18311
Nairobi
Tel. 557726,556762
Cable: PROTON

Medical Only
International Aerabio(E.A.)Ltd
P.O. Box 19012
Nairobi Airport
Nairobi
Tel. 336055,56
Telex: 22201/22301
Cable: INTAERO Nairobi

KOREA
Samyung Electronics Co., Ltd
20th Fl. Dongbang Bldg 250 2-KA
C.P.O. Box 2775
Taejoong Ro, Chung Ku
Seoul
Tel. (23) 6811
Telex: 23575
Cable: ELEKSTAR Seoul

MALAYSIA
Teknik Mutu Sdn. Bhd
2 Lorong 13/6A
Section 13
Petaling **Jaya, Selangor**
Tel. 549/54596
Telex: MA 37926
Cable: THETEL Ibadan

The Electronics Instrumentations Ltd
314 Ikorodu Motor Road, Mushin
P.O. Box 6645
Lagos
Cable: THETEL Lagos

PAKISTAN
Mushko & Company Ltd
Oosman Chambers
Abdullah Haroon Road
Karachi 3
Tel. 511827, 512927
Telex: KR894
Cable: COOPERATOR Karachi

Mushko & Company, Ltd
388 Satellite Town
Rawalpindi
Tel. 41924
Cable: FEMUS Rawalpindi

Hewlett-Packard (N.Z.) Ltd
Pakuranga Professional Centre
267 Pakuranga Highway
Box 51092
Pakuranga
Tel. 569-651
Telex: NZ 3839
Cable: HEWPACK Auckland

Analytical/Medical Only
Hewlett-Packard N.Z. Ltd
Specialist Division
79 Carlton Gore Rd. Newmarket
P.O. Box 1234
Auckland
Tel. 79-789
Telex: 2958 MEDISUP
Cable: DENTAL Auckland

Analytical/Medical Only
Medical Suppliers N.Z. Ltd
P.O. Box 1994
147-161 Tory St.
Wellington
Tel. 850-799
Telex: 3858
Cable: DENTAL Wellington

Analytical/Medical Only
Medical Suppliers N.Z. Ltd
P.O. Box 309
239 Stanmore Road
Christchurch
Tel. 892-019
Cable: DENTAL Christchurch

Analytical Medical Only
Medical Suppliers N.Z. Ltd
303 Great King Street
P.O. Box 233
Dunedin
Tel. 88-817
Cable: DENTAL Dunedin

NIGERIA
The Electronics Instrumentations Ltd
N68/770 Oyo Road
Oluduran House
P.M.B. 5402
Ibadan
Tel. 61577
Telex: 31231 TEIL Nigeria
Cable: THETEL Ibadan

The Electronics Instrumentations Ltd
Rumuola
Aba Road, Port Harcourt
P.O. Box 6645
Lagos
Cable: THETEL Lagos

MOZAMBIQUE
A.N. Goncalves, Ltda.
162, 1° Apt 14 Av. D. Luis
Caixa Postal 107
Lourenco Marques
Tel. 27091, 27114
Telex: 6 203 NEGON Mo
Cable: NEGON

NEW ZEALAND
Hewlett-Packard (N.Z.) Ltd
P.O. Box 9443
Courtney Place
Wellington
Tel. 877-199
Telex: NZ 3839
Cable: HEWPACK Wellington

PHILIPPINES
The Online Advanced Systems Corporation
Suite 1035
6th Floor, Ysaur Co. Bldg.
560 Quintin Paredes St.
Binondo, **Manila**
Tel. 47-81-31, 88-68-51
Hi Makati: 85-20-81, 85-34-91
Telex: 3774 ONLINE

RHODESIA
Field Technical Sales
45 Kelvin Road North
P.O. Box 3458
Salisbury
Tel. 705371 (5 lines)
Telex: RH 4022

SINGAPORE
Hewlett-Packard Singapore (Pte.) Ltd.
366-1F Jalan Bahar Manis
Blk. 2, 6th Floor, Jalan Bachoh Industrial Estate
Alexandra P.O. Box 58
Singapore 3
Tel. 633022
Telex: HPSG RS 21486
Cable: HEWPACK Singapore

SOUTH AFRICA
Hewlett-Packard South Africa (Pty.) Ltd.
Private Bag Wendywood
Sandton, Transvaal 2144
Daphne Place, Wendywood
Sandton, Transvaal 2144
Tel. 802-1040/8
Telex: 8-4782
Cable: HEWPACK JOHANNESBURG

Service Department
Hewlett-Packard South Africa (Pty.) Ltd.
P.O. Box 39535
Gramley, Sandton, 2018
451 Wynberg Extension 3
Sandton, 2001
Tel. 636-8188/9
Telex: 8-2391

Hewlett-Packard South Africa (Pty.) Ltd.
P.O. Box 120
Howard Place, Cape Province, 7450
Pine Park Center, Forest Drive
Pinelands, Cape Province, 7405
Tel. 53-7955 Pin 8
Telex: 57-0006

Service Department
Hewlett-Packard South Africa (Pty.) Ltd.
P.O. Box 37099
Overport, Durban 4067
Braby House
641 Bulge Road
Durban, 4001
Tel. 88-7478
Telex: 6-7954

TAIWAN
Hewlett-Packard Far East Ltd
Taiwan Branch
39 Chung Shiao West Road
Sec. 1, 7th Floor
Taipei
Tel. 3819160-4
Telex: 21824 HEWPACK TAIPEI
Cable: HEWPACK TAIPEI

Hewlett-Packard Far East Ltd
Taiwan Branch
68-2 Chung Cheng 3rd. Road
Kaohsiung
Tel. (07) 242318 Kaohsiung

Analytical Only
San Kwang Instruments Co., Ltd
No. 20 Yung Sui Road
Taipei
Tel. 3715071-4 (5 lines)
Telex: 22894 SANKWANG
Cable: SANKWANG TAIPEI

TANZANIA
Medical Only
International Aerabio (E.A.) Ltd
P.O. Box 861
Dar-Es-Salaam
Tel. 21251, Ext. 265
Telex: 41030

THAILAND
UNIMESA Co., Ltd.
Elcom Research Building
Bangkok Sukumvit Ave
Bangkok
Tel. 830387, 930338
Cable: UNIMESA Bangkok

UGANDA
Medical Only
International Aerabio(E.A.) Ltd.
P.O. Box 2577
Kampala
Tel. 54388
Cable: INTAERO Kampala

ZAMBIA
R.J. Tilbury (Zambia) Ltd
P.O. Box 2792
Lusaka
Tel. 73793
Cable: ARJAYTEE Lusaka

OTHER AREAS NOT LISTED, CONTACT:
Hewlett-Packard Intercontinental
3200 Hillview Ave
Palo Alto, California 94304
Tel. (415) 493-1501
TWX: 910-373-1267
Cable: HEWPACK Palo Alto
Telex: 034-8300, 034-8493

CANADA

ALBERTA
Hewlett-Packard (Canada) Ltd
11620A - 168 Street
Edmonton T5M 3T9
Tel. (403) 452-3670
TWX: 610-831-2431 EDTH

Hewlett-Packard (Canada) Ltd
915-42 Ave S.E. Suite 102
Calgary, T2G 1Z1
Tel. (403) 287-1672
Telex: 860-821 6461

BRITISH COLUMBIA
Hewlett-Packard (Canada) Ltd
837 E. Cordova Street
Vancouver V6A 3R2
Tel. (604) 254-0531
TWX: 610-922-5059 VCR

MANITOBA
Hewlett-Packard (Canada) Ltd
513 Century St.
St. James
Winnipeg R3H 0L8
Tel. (204) 786-7581
TWX: 610-671-3531

NOVA SCOTIA
Hewlett-Packard (Canada) Ltd
800 Windmill Road
P.O. Box 9031
Dartmouth B2Y 3Z6
Tel. (902) 469-7820
TWX: 610 271-4482 HFX

ONTARIO
Hewlett-Packard (Canada) Ltd
1020 Morrison Dr.
Ottawa K2H 8K7
Tel. (613) 820-6483
TWX: 610-563-1636

Hewlett-Packard (Canada) Ltd
6877 Goreway Drive
Mississauga L4V 1M8
Tel. (416) 678-9430
TWX: 610-492-4246

QUEBEC
Hewlett-Packard (Canada) Ltd
275 Hymus Blvd
Pointe Claire H9R 1G7
Tel. (514) 697-4232
TWX: 610-422-3022
TLX: 05 821521 HPCL

FOR CANADIAN AREAS NOT LISTED:
Contact Hewlett-Packard (Canada) Ltd. in Mississauga

CENTRAL AND SOUTH AMERICA

ARGENTINA
Hewlett-Packard Argentina S.A.
Av. Leandro N. Alem 822 - 12°
1001 **Buenos Aires**
Tel. 31-0063 4,5,6 and 7
Telex: Public Booth N. 9
Cable: HEWPACK ARG

BOLIVIA
Stambuk & Mark (Bolivia) Ltda.
Av. Mariscal Santa Cruz 1342
La Paz
Tel. 40626, 53163, 52421
Telex: 3560014
Cable: BORMAR

BRAZIL
Hewlett Packard do Brasil I.e.C. Ltda.
Avenida Rio Negro 980
Alphaville
06400 Barueri **Sao Paulo**
Tel. 429-2149/429-2118/9

Hewlett-Packard do Brasil I.e.C. Ltda.
Rua Padre Chagas, 32
90000 **Porto Alegre** RS
Tel. (0532) 27-2998, 27-5621
Cable: HEWPACA Porto Alegre

Hewlett-Packard do Brasil I.E.C. Ltda.
Rua Siqueira Campos, 53
Copacabana
20000 **Rio de Janeiro**
Tel. 257-80-94, 000 (021)
Telex: 399-2122 HEWP BR
Cable: HEWPACK
Rio de Janeiro

CHILE
Calcagni y Metcalfe Ltda.
Alameda 580 Of. 807
Casilla 2118
Santiago
Tel. 392-135
Telex: 2432/20001 CALMET
Cable: CALMET Santiago

COLOMBIA
Instrumentación
Henrik A. Langebaek & Kier S.A.
Carrera 7 No. 48-75
Apartado Aéreo 6287
Bogotá, D.E.
Tel. 69 88 77
Cable: AARIS Bogotá
Telex: 044 400

COSTA RICA
Cientifica Costarricense S.A.
Calle Central, Avenidas 1 y 3
Apartado 10159
San José
Tel. 21-86-13
Cable: SALGUR San José

ECUADOR
Medical Only
A.I. Wilcox Comp.a Ltda.
Av. Rio Amazonas Nº. 739
P.O. Box 2925
Quito
Tel. 242-150 247-033/034
Cable: Astor Quito

Calculators Only
Computadoras y Equipos Electronicos
P.O. Box 2595
960 Toledo y Conferez
Quito
Tel. 525-982
Telex: 02-2113 Sagita Ed
Cable: Sagita Quito

EL SALVADOR
Instrumentacion y Procesamiento Electronico de el Salvador
Bulevar de los Heroes II-48
San Salvador
Tel. 25218

GUATEMALA
IPESA
Avenida La Reforma 3-48
Zona 9
Guatemala City
Tel. 63627, 64786
Telex: 4192 Teletro Gu

MEXICO
Hewlett-Packard Mexicana S.A. de C.V.
Torres Adalid No. 21, 11. Piso
Col. del Valle
Mexico 12, D.F.
Tel. (905) 543-42-32
Telex: 017-74-507

Hewlett Packard Mexicana S.A. de C.V.
Ave. Constitución No. 2184
Monterrey, N.L.
Tel. 48-71-32, 48-71-84
Telex: 038-843

NICARAGUA
Roberto Terán G.
Apartado Postal 689
Edificio Terán
Managua
Tel. 23412, 23452, 23454
Cable: ROTERAN Managua

PANAMA
Electronics Balboa S.A.
P.O. Box 4929
Calle Samuel Lewis
Ciudad de Panama
Tel. 64-2700
Telex: 3431103 Curunda, Canal Zone
Cable: ELECTRON Panama

PARAGUAY
R.J. Melamed S.R.L.
División Aparatos y Equipos Médicos
División Aparatos y Equipos Científicos y de Investigación
P.O. Box 676
Chile 482, Edificio Victoria
Asunción
Tel. 91 271, 91 272
Cable: RAMEL

PERU
Compañía Electro Médica S.A.
Los Flamencos 145
San Isidro Casilla 1030
Lima 1
Tel. 41-4325
Cable: ELMED Lima

PUERTO RICO
Hewlett Packard Inter-Americas
Puerto Rico Branch Office
Calle 277
No. 203 Urb. Country Club
Carolina 00921
Tel. (809) 762 7255
Telex: 345 0514

URUGUAY
Pablo Ferrando S.A.
Comercial e Industrial
Avenida Italia 2877
Casilla de Correo 370
Montevideo
Tel. 40-3102
Cable: RADIUM Montevideo

VENEZUELA
Hewlett Packard de Venezuela C.A.
P.O. Box 50933
Caracas 105
Los Ruices Norte
3a Transversal
Edificio Segre
Caracas 107
Tel. 35-00-11 (20 lines)
Telex: 25146 HEWPACK
Cable: HEWPACK Caracas

FOR AREAS NOT LISTED, CONTACT:
Hewlett-Packard
Inter-Americas
3200 Hillview Ave
Palo Alto, California 94304
Tel. (415) 493-1501
TWX: 910 373 1267
Cable: HEWPACK Palo Alto
Telex: 034 8300, 034 8493

◆ Major Assembly Locations

EUROPE, NORTH AFRICA AND MIDDLE EAST

AUSTRIA
Hewlett-Packard Ges m b H
Handelskai 52
P O box 7
A-1205 **Vienna**
Tel (0222) 351621 to 27
Cable HEWPAK Vienna
Telex 75923 hewpak a

BELGIUM
Hewlett-Packard Benelux
S A /N V
Avenue de Col-Vert, 1,
(Groenkraaglaan)
B-1170 **Brussels**
Tel (02) 672 22 40
Cable PALOBEN Brussels
Telex 23 494 paloben bru

CYPRUS
Kypronics
19, Gregorios & Xenopoulos Rd
P O Box 1152
CY-**Nicosia**
Tel 45628/29
Cable KYPRONICS PANDEHIS
Telex 3018

CZECHOSLOVAKIA
Vyvojova a Provozni Zakladna
Vyzkumnych Ustavu v Bechovicich
CSSR-25097
Bechovice u Prahy
Tel 89 93 41
Telex 121333

Institute of Medical Bionics
Vyskumny Ustav Lekarskej Bioniky
Jedlova 6
CS-88346 **Bratislava-Kramare**
Tel 44-551 45-541

DDR
Entwicklungslabor der TU Dresden
Forschungsinstitut Meinsberg
ODR-7305
Waldheim/Meinsberg
Tel 37 667
Telex 112145

Export Contact AG Zuerich
Guenther Forgber
Schiegelstrasse 15
1040 **Berlin**
Tel 42-74-12
Telex 111889

DENMARK
Hewlett-packard A/S
Datavej 52
DK-3460 **Birkered**
Tel (02) 81 66 40
Cable HEWPACK AS
Telex 166 40 hpas

Hewlett-Packard A/S
Navervej 1
DK-8600 **Silkeborg**
Tel (06) 82 71 66
Telex 166 40 hpas
Cable HEWPACK AS

FINLAND
Hewlett-Packard OY
Nahkahousuntie 5
P O Box 6
SF-00211 **Helsinki** 21
Tel (90) 6923031
Cable HEWPACKOY Helsinki
Telex 12-1563 HEWPA SF

FRANCE
Hewlett-Packard France
Ouartier de Courtaboeuf
Boite Postale No 6
F-91401 **Orsay** Cédex
Tel (1) 907 78 25
Cable HEWPACK Orsay
Telex 600048

Hewlett-Packard France
Agency Régionale
Le Saquin
Chemin des Moulines
B P 162
F-69130 **Ecully**
Tel (78) 33 81 25
Cable HEWPACK Eculy
Telex 31 06 17

Hewlett-Packard France
Agence Régionale
Péricentre de la Cépière
Chemin de la Cépière, 20
F-31300 **Toulouse-Le Mirail**
Tel (61) 40 11 12
Cable HEWPACK 51957
Telex 510957

Hewlett-Packard France
Agence Régionale
Aéroport principal de
Marseille-Marignane
F-13721 **Marignane**
Tel (91) 89 12 36
Cable HEWPACK MARGN
Telex 410770

Hewlett-Packard France
Agence Régionale
63, Avenue de Rochester
B P 1124
F-35014 **Rennes** Cédex
Tel (99) 36 33 21
Cable HEWPACK 74912
Telex 740912

Hewlett-Packard France
Agence Régionale
74, Allée de la Robertsau
F-67000 **Strasbourg**
Tel (88) 35 23 20/21
Telex 890141
Cable HEWPACK STRBG

Hewlett-Packard France
Agence Régionale
Centre Vauban
201, rue Colbert
Entrée A2
F-59000 **Lille**
Tel (20) 51 44 14
Telex 820744

Hewlett-Packard France
Centre d Affaires Paris-Nord
Bâtiment Ampère
Rue de La Commune de Paris
B P 300
F-93153
Le Blanc Mesnil Cédex
Tel (01) 931 88 50

GERMAN FEDERAL REPUBLIC
Hewlett-Packard GmbH
Vertriebszentrale Frankfurt
Bernerstrasse 117
Postfach 560 140
D-6000 **Frankfurt** 56
Tel (0611) 50 04-1
Cable HEWPACKSA Frankfurt
Telex 04 13249 hpffmd

Hewlett-Packard GmbH
Technisches Buero Böblingen
Herrenbergerstrasse 110
D-7030 **Böblingen**, Wurttemberg
Tel (07031) 667-1
Cable HEPAK Böblingen
Telex 07265739 bbn

Hewlett-Packard GmbH
Technisches Buero Dusseldorf
Emanuel-Leutze-Str 1 (Seestern)
D-4000 **Dusseldorf** 11
Tel (0211) 59711
Telex 085/86 533 hpdd d

Hewlett-Packard GmbH
Technisches Buero Hamburg
Wendenstrasse 23
D-2000 **Hamburg** 1
Tel (040) 24 13 93
Cable HEWPACKSA Hamburg
Telex 21 63 032 hphh d

Hewlett-Packard GmbH
Technisches Buero Hannover
Am Grossmarkt 6
D-3000 **Hannover-Kleefeld 91**
Tel (0511) 46 60 01
Telex 092 3259

Hewlett-Packard GmbH
Technisches Buero Nuremberg
Neumeyer Str. 90
D-8500 **Nuremberg**
Tel (0911) 56 30 83/85
Telex 0623 860

Hewlett-Packard GmbH
Technisches Buero München
Unterhachinger Strasse 28
ISAR Center
D-8012 **Ottobrunn**
Tel (089) 601 30 61/7
Cable HEWPACKSA München
Telex 0524985

Hewlett-Packard GmbH
Technisches Buero Berlin
Keith Strasse 2-4
D-1000 **Berlin** 30
Tel (030) 24 90 86
Telex 18 3405 hpbln d

GREECE
Kostas Karayannis
18, Ermou Street
GR-**Athens** 126
Tel 3237731
Cable RAKAR Athens
Telex 21 59 62 rkar gr

Analytical Only
"INTECO"
G. Papathanassiou & Co.
Marni 17
GR - **Athens** 103
Tel 522 1915
Cable INTEKNIKA Athens
Telex 21 5329 INTE GR

Medical Only
Technomed Hellas Ltd.
52, Skoufa Street
GR - **Athens** 135
Tel 362 6972, 363 3830
Cable etalak athens
Telex 21-4693 ETAL GR

HUNGARY
MTA
Müszerügyi és Méréstechnikai
Szolgalata
Lenin Krt. 67
1391 **Budapest** VI
Tel 42 03 38
Telex 22 51 14

ICELAND
Medical Only
Elding Trading Company Inc.
Hafnarhvoli - Tryggvatotu
IS-**Reykjavik**
Tel 1 58 20
Cable ELDING Reykjavik

IRAN
Hewlett-Packard Iran Ltd.
No. 13, Fourteenth St
Mirarmad Avenue
P O Box 41/2419
IR-**Tehran**
Tel 851082-7
Telex 213405 HEWP IR

IRAQ
Hewlett-Packard Trading Co.
Mansoor City
Baghdad
Tel 5517827
Telex 2455 Hepairaq ik
Cable HEWPACDAO
Baghdad Iraq

IRELAND
Hewlett-Packard Ltd
King Street Lane
GB-**Winnersh**, Wokingham
Berks. RG11 5AR
Tel (0734) 78 47 74
Telex 847178/848179

ITALY
Hewlett-Packard Italiana S.p.A.
Via Amerigo Vespucci 2
Casella postale 3645
I-20100 **Milano**
Tel (2) 6251 (10 lines)
Cable HEWPACKIT Milano
Telex 32046

Hewlett-Packard Italiana S.p.A.
Via Pietro Maroncelli 40
(ang. Via Visentin)
I-35100 **Padova**
Tel (49) 66 48 88
Telex 41612 Hewpackı

Medical only
Hewlett-Packard Italiana S.p.A.
Via d'Aghiardi, 7
I-56100 **Pisa**
Tel (050) 2 32 04
Telex 32046 via Milano

Hewlett-Packard Italiana S.p.A.
Via G. Armellini 10
I-00143 **Roma**
Tel (06) 54 69 61
Telex 61514
Cable HEWPACKIT Roma

Hewlett-Packard Italiana S.p.A.
Corso Giovanni Lanza 94
I-10130 **Torino**
Tel (011) 682245/659308

Medical/Calculators Only
Hewlett-Packard Italiana S.p.A.
Via Principe Nicola 43 G/C
I-95126 **Catania**
Tel.(095) 37 05 04

Hewlett-Packard Italiana S.p.A.
Via Amerigo Vespucci, 9
I-80142 **Napoli**
Tel (081) 33 77 11

Hewlett-Packard Italiana S.p.A.
Via E. Masi, 9/B
I-40137 **Bologna**
Tel (051) 30 78 87

KUWAIT
Al-Khaldiya Trading &
Contracting Co.
P.O. Box 830
Kuwait
Tel: 42 49 10
Cable VISCOUNT

LUXEMBURG
Hewlett-Packard Benelux
S.A./N.V.
Avenue du Col-Vert, 1,
(Groenkraaglaan)
B-1170 **Brussels**
Tel (02) 672 22 40
Cable PALOBEN Brussels
Telex 23 494

MOROCCO
Gerep
190, Blvd. Brahim Roudani
Casablanca
Tel: 25-16-76/25-90-99
Cable: Gerep-Casa
Telex: 23739

NETHERLANDS
Hewlett-Packard Benelux N.V.
Van Heuven Goedhartlaan 121
P.O. Box 667
NL-1134 **Amstelveen**
Tel (020) 47 20 21
Cable PALOBEN Amsterdam
Telex 13 216 hepa nl

NORWAY
Hewlett-Packard Norge A/S
Nesveien 13
Box 149
N-1344 **Haslum**
Tel: (02) 53 83 60
Telex: 16621 hpnas n

POLAND
Biuro Informacji Technicznej
Hewlett-Packard
U1 Stawki 2, 6P
00-950**Warazawa**
Tel 395962/395187
Telex 81 24 53 hepa pl

UNIPAN
Zaklad Doswiadczalny
Budowy Aparatury Naukowej
U1 Krajowej Hady Narodowej 51/55
00-800 **Warazawa**
Tel 36190
Telex 81 46 48

Zaklady Naprawcze Sprzetu
Medycznego
Plac Komuny Paryskiej 6
90-007 **Lodz**
Tel 334-41, 337-83

PORTUGAL
Telectra-Empresa Técnica de
Equipamentos Eléctricos S.a.r.l.
Rua Rodrigo da Fonseca 103
P.O. Box 2531
P-**Lisbon** 1
Tel (19) 68 60 72
Cable TELECTRA Lisbon
Telex: 12598

Medical only
Mundinter
Intercambio Mundial de Comércio
S.a.r.l.
Av.A.A.de Aguiar 138
P.O. Box 2761
P - **Lisbon**
Tel: (19) 53 21 31/7
Cable: INTERCAMBID Lisbon

RUMANIA
Hewlett-Packard Reprezentanta
Bd.N. Balcescu 16
Bucharest
Tel: 158023/138885
Telex: 10440

I.I.R.U.C.
Intreprinderea Pentru
Intretinerea
Si Repararea Utilajelor de Calcul
B-dul prof. Dimitrie Pompei 6
Bucharest-Sectorul 2
Tel: 12 64 30
Telex: 11716

SAUDI ARABIA
Modern Electronic Establishment
King Abdul Aziz str. (Head office)
P.O. Box 1228
Jeddah
Tel: 31173-332201
Cable: ELECTRA

P.O. Box 2728 (Service center)
Riyadh
Tel: 62596-66232
Cable: RAOUFCO

SPAIN
Hewlett-Packard Española, S.A.
Jerez No. 3
E-**Madrid** 16
Tel.(1) 458 26 00 (10 lines)
Telex: 23515 hpe

Hewlett-Packard Española, S.A.
Milanesado 21-23
E-**Barcelona** 17
Tel. (3) 203 6200 (5 lines)
Telex: 52603 hpbe e

Hewlett-Packard Española, S.A.
Av Ramón y Cajal, 1
Edificio Sevilla, planta 9,
E-**Seville** 5
Tel: 64 44 54/58

Hewlett-Packard Española S.A.
Edificio Albia II 7, B
E-**Bilbao**-1
Tel: 23 83 06/23 82 06

Calculators Only
Hewlett-Packard Española S.A.
Gran Via Fernando El Católico, 67
E-**Valencia**-8
Tel: 326 67 28/326 85 55

SWEDEN
Hewlett-Packard Sverige AB
Enighetsvägen 1-3
Fack
S-161 20 **Bromma** 20
Tel (08) 730 05 50
Cable MEASUREMENTS
Stockholm
Telex 10721

Hewlett-Packard Sverige AB
Ostra Vintergatan 22
S-702 40 **Orebro**
Tel (019) 14 07 20

Hewlett-Packard Sverige AB
Frötallsgatan 30
S-421 32 **Västra Frölunda**
Tel (031) 49 09 50
Telex: 10721 via Bromma Office

SWITZERLAND
Hewlett-Packard (Schweiz) AG
Zürcherstrasse 20
P.O. Box 307
CH-8952 **Schlieren-Zurich**
Tel. (01) 730 52 40/730 18 21
Cable: HPAG CH
Telex: 53933 hpag ch

Hewlett-Packard (schweiz) AG
Château Bloc 19
CH-1219 **Le Lignon-Geneva**
Tel: (022) 96 03 22
Cable: HEWPACKAG Geneva
Telex: 27 333 hpag ch

SYRIA
Medical/Calculator only
Sawah & Co.
Place Azmé
B.P. 2308
SYR-**Damascus**
Tel: 16367, 19697, 14268
Cable: SAWAH, Damascus

TURKEY
Telekom Engineering Bureau
P.O. Box 437
Beyoglu
TR-**Istanbul**
Tel: 49 40 40
Cable: TELEMATIDN Istanbul
Telex: 23609

Medical only
E.M.A.
Muhendislik Kollektif Sirketi
Adakale Sokak 41/6
TR-**Ankara**
Tel: 175622

Analytical only
Yilmaz Ozyurek
Milli Mudafaa Cad No. 16/6
Kizilay
TR-**Ankara**
Tel: 25 03 09
Telex: 42576 Ozek tr

UNITED KINGDOM
Hewlett-Packard Ltd.
King Street Lane
GB-**Winnersh**, Wokingham
Berks. RG11 5AR
Tel. (0734) 78 47 74
Cable: Hewpie London
Telex:847178/9

Hewlett-Packard Ltd.
Trafalger House,
Navagation Road
Altrincham
Cheshire WA14 1NU
Tel: (061) 928 6422
Cable: Hewpie Manchester
Telex: 668068

Hewlett-Packard Ltd
Lygon Court
Hereward Rise
Dudley Road
Halesowen,
West Midlands B62 8SD
Tel: (021) 550 9911
Telex: 339105

Hewlett-Packard Ltd.
Wedge House
799, London Road
GB-**Thornton Heath**
Surrey CR4 6XL
Tel: (01) 684 0103/8
Telex: 946825

Hewlett-Packard Ltd
c/o Makro
South Servicehotesale Centre
Wear Industrial Estate
Washington
GB-**New Town**, County Durham
Tel: Washington 464001 ext. 57/58

Hewlett-Packard Ltd
10, Wesley St
GB-**Castleford**
West Yorkshire WF10 1AE
Tel: (09775) 50402
Telex: 557355

Hewlett-Packard Ltd
1, Wallace Way
GB-**Hitchin**
Herts
Tel: (0462) 52824/56704
Telex: 825981

USSR
Hewlett-Packard
Representative Office USSR
Pokrovsky Boulevard 4/17-KW 12
Moscow 101000
Tel:294-2024
Telex: 7825 hewpak su

YUGOSLAVIA
Iskra-standard/Hewlett-Packard
Miklosiceva 38/VII
61000 **Ljubljana**
Tel: 31 58 79/32 16 74
Telex: 31583

SOCIALIST COUNTRIES NOT SHOWN PLEASE CONTACT:
Hewlett-Packard Ges.m.b.H
P.O. Box 7
A-1205 **Vienna**, Austria
Tel: (0222) 35 16 21 to 27
Cable: HEWPAK Vienna
Telex: 75923 hewpak a

MEDITERRANEAN AND MIDDLE EAST COUNTRIES NOT SHOWN PLEASE CONTACT:
Hewlett-Packard S.A.
Mediterranean and Middle
East Operations
35, Kolokotroni Street
Platia Kefallariou
GR-Kifissia-**Athens**, Greece
Tel: 8080337/359/429
Telex: 21-6588
Cable: HEWPACKSA Athens

FOR OTHER AREAS NOT LISTED CONTACT
Hewlett-Packard S.A.
7, rue du Bois-du-Lan
P.O. Box
CH-1217 Meyrin 2 - **Geneva**
Switzerland
Tel. (022) 82 70 00
Cable: HEWPACKSA Geneva
Telex: 2 24 86

UNITED STATES

ALABAMA
8290 Whitesburg Dr., S.E.
P.O. Box 4207
Huntsville 35802
Tel. (205) 881-4591

Medical Only
228 W. Valley Ave.
Room 220
Birmingham 35209
Tel. (205) 942-2081/2

ARIZONA
2336 E. Magnolia St.
Phoenix 85034
Tel. (602) 244-1361

2424 East Aragon Rd.
Tucson 85706
Tel. (602) 294-3148

***ARKANSAS**
Medical Service Only
P.O. Box 5646
Brady Station
Little Rock 72205
Tel. (501) 376-1844

CALIFORNIA
1430 East Orangethorpe Ave.
Fullerton 92631
Tel. (714) 870-1000

3939 Lankershim Boulevard
North Hollywood 91604
Tel. (213) 877-1282
TWX: 910-499-2671

6305 Arizona Place
Los Angeles 90045
Tel. (213) 649-2511
TWX: 910-328-6147

***Los Angeles**
Tel. (213) 776-7500

3003 Scott Boulevard
Santa Clara 95050
Tel. (408) 249-7000
TWX: 910-338-0518

***Ridgecrest**
Tel. (714) 446-6165

646 W. North Market Blvd
Sacramento 95834
Tel. (916) 929-7222

9606 Aero Drive
P.O. Box 23333
San Diego 92123
Tel. (714) 279-3200

COLORADO
5600 South Ulster Parkway
Englewood 80110
Tel. (303) 771-3455

CONNECTICUT
12 Lunar Drive
New Haven 06525
Tel. (203) 389-6551
TWX: 710-465-2029

FLORIDA
P.O. Box 24210
2806 W. Oakland Park Blvd
Ft. Lauderdale 33311
Tel. (305) 731-2020

***Jacksonville**
Medical Service only
Tel. (904) 398-0663

P.O. box 13910
6177 Lake Ellenor Dr.
Orlando 32809
Tel. (305) 859-2900

P.O. Box 12826
Pensacola 32575
Tel. (904) 476-8422

GEORGIA
P.O. Box 105005
Atlanta 30348
Tel. (404) 955-1500
TWX 810-766-4890

Medical Service Only
***Augusta** 30903
Tel. (404) 736-0592

P.O. Box 2103
Warner Robins 31098
Tel. (912) 922-0449

HAWAII
2875 So. King Street
Honolulu 96814
Tel (808) 955-4455
Telex 723-705

ILLINOIS
5201 Tollview Dr.
Rolling meadows 60008
Tel: (312) 255-9800
TWX: 910-687-2260

INDIANA
7301 North Shadeland Ave.
Indianapolis46250
Tel. (317)842-1000
TWX: 810-260-1797

IOWA
1902 Broadway
Iowa City 52240
Tel: (319) 338-9466

KENTUCKY
Medical Only
Atkinson Square
3901 Atkinson Dr.
Suite 207
Louisville 40218
Tel: (502) 456-1573

LOUISIANA
P.O. Box 840
3229-39 Williams Boulevard
Kenner 70063
Tel: (504) 443-6201

MARYLAND
6707 Whitestone Road
Baltimore 21207
Tel: (301) 944-5400
TWX: 710-862-9157

2 Choke Cherry Road
Rockville 20850
Tel: (301) 948-6370
TWX: 710-828-9684

MASSACHUSETTS
32 Hartwell Ave.
Lexington 02173
Tel: (617) 861-8960
TWX: 710-326-6904

MICHIGAN
23855 Research Drive
Farmington Hills 48024
Tel: (313) 476-6400

MINNESOTA
2400 N. Prior Ave.
St. Paul 55113
Tel. (612) 636-0700

MISSISSIPPI
***Jackson**
Medical Service only
Tel: (601) 982-9363

MISSOURI
11131 Colorado Ave.
Kansas City 64137
Tel: (816) 763-8000
TWX: 910-771-2087

148 Weldon Parkway
Maryland Heights 63043
Tel: (314) 567-1455
TWX: 910-764-0833

NEBRASKA
Medical Only
7171 Mercy Road
Suite 110
Omaha 68106
Tel: (402) 392-0948

NEW JERSEY
W. 120 Century Rd.
Paramus 07652
Tel: (201) 265-5000
TWX: 710-990-4951

Crystal Brook Professional
Building
Eatontown 07724
Tel:(201) 542-1384

NEW MEXICO
P.O. Box 11634
Station E
11300 Lomas Blvd., N.E.
Albuquerque 87123
Tel: (505) 292-1330
TWX: 910-989-1185

156 Wyatt Drive
Las Cruces 88001
Tel. (505) 526-2484
TWX: 910-983-0550

NEW YORK
6 Automation Lane
Computer Park
Albany 12205
Tel: (518) 458-1550

201 South Avenue
Poughkeepsie 12601
Tel. (914) 454-7330
TWX: 510-253-5981

39 Saginaw Drive
Rochester 14623
Tel. (716) 473-9500
TWX: 510-253-5981

5858 East Molloy Road
Syracuse 13211
Tel. (315) 454-2486
TWX: 710-541-0482

1 Crossways Park West
Woodbury 11797
Tel: (516) 921-0300
TWX: 710-990-4951

NORTH CAROLINA
P.O. Box 5188
1923 North Main Street
High Point 27262
Tel (919) 885-8101

OHIO
16500 Sprague Road
Cleveland 44130
Tel: (216) 243-7300
TWX: 810-423-9430

330 Progress Rd.
Dayton 45449
Tel: (513) 859-8202

1041 Kingsmill Parkway
Columbus 43229
Tel: (614) 436-1041

OKLAHOMA
P.O. Box 32008
Oklahoma City 73132
Tel. (405) 721-0200

OREGON
17890 SW Lower Boones
Ferry Road
Tualatin 97062
Tel: (503) 620-3350

PENNSYLVANIA
111 Zeta Drive
Pittsburgh 15238
Tel: (412) 782-0400

1021 8th Avenue
King of Prussia Industrial Park
King of Prussia 19406
Tel. (215) 265-7000
TWX: 510-660-2670

SOUTH CAROLINA
6941-0 N. Trenholm Road
Columbia 29260
Tel: (803) 782-6493

TENNESSEE
***Knoxville**
Medical Service only
Tel: (615) 523-5022

1473 Madison Avenue
Memphis 38104
Tel. (901) 274-7472

Nashville
Medical Service only
Tel: (615) 244-5448

TEXAS
P.O. Box 1270
201 E. Arapaho Rd.
Richardson 75080
tel: (214) 231-6101

P.O. Box 27409
6300 Westpark Drive
Houston 77057
Tel: (713) 781-6000

205 Billy Mitchell Road
San Antonio 78226
Tel: (512) 434-8241

UTAH
2160 South 3270 West Street
Salt Lake City 84119
Tel: (801) 487-0715

VIRGINA
P.O. Box 12778
No. 7 Koger Exec. Center
Suite 212
Norfolk 23502
Tel:(804) 461-4025/6

P.O.Box 9669
2914 Hungary Springs Road
Richmond 23228
Tel: (804) 285-3431

WASHINGTON
Bellefield Office Pk.
1203-114th Ave. S.E.
Bellevue 98004
Tel. (206) 454-3971
TWX: 910-443-2446

***WEST VIRGINIA**
Medical/Analytical Only
Charleston
Tel. (304) 345-1640

WISCONSIN
9004 West Lincoln Ave.
West Allis 53227
Tel: (414) 541-0550

FOR U.S. AREAS NOT LISTED:
Contact the regional office
nearest you: Atlanta, Georgia;
North Hollywood, California;
Rockville, Maryland; Rolling Meadows,
Illinois. Their complete
addresses are listed above.

***Service Only**

APPENDIX A
REFERENCES

DA Pam 310-4	Index of Technical Manuals, Technical Bulletins, Supply Manuals (Types 7, 8, and 9), Supply Bulletins, and Lubrication Orders.
DA Pam 310-7	US Army Equipment Index of Modification Work Orders.
TM 38-750	The Army Maintenance Management System (TAMMS).
TM 750-244-2	Procedures for Destruction of Electronics Materiel to Prevent Enemy Use (Electronics Command).

APPENDIX B

COMPONENTS OF END ITEM LISTING

ICOEIL

1 each Power Meter TS-3793/U 6625-01-033-5050

BIIL

Technical Manual TM 11-6625-2969-l4&P

AAL

N/A

ES&ML

N/A

APPENDIX D

MAINTENANCE ALLOCATION

Section I. INTRODUCTION

D-1. General

This appendix provides a summary of the maintenance operations for the TS-3793/U. It authorizes categories of maintenance for specific maintenance functions on repairable items and components and the tools and equipment required to perform each function. This appendix may be used as an aid in planning maintenance operations.

D-2. Maintenance Function

Maintenance functions will be limited to and defined as follows:

a. Inspect. To determine the serviceability of an item by comparing its physical, mechanical, and/or electrical characteristics with established standards through examination.

b. Test. To verify serviceability and to detect incipient failure by measuring the mechanical or electrical characteristics of an item and comparing those characteristics with prescribed standards.

c. Service. Operations required periodically to keep an item in proper operating conditions, i.e., to clean (decontaminate), to preserve, to drain, to paint, or to replenish fuel, lubricants, hydraulic fluids, or compressed air supplies.

d. Adjust To maintain, within prescribed limits, by bringing into proper or exact position, or by setting the operating characteristics to the specified parameters.

e. Align. To adjust specified variable elements of an item to bring about optimum or desired performance.

f. Calibrate. To determine and cause corrections to be made or to be adjusted on instruments or test measuring and diagnostic equipments used in precision measurement. Consists of comparisons of two instruments, one of which is a certified standard of known accuracy, to detect and adjust any discrepancy in the accuracy of the instrument being compared.

g. Install. The act of emplacing, seating, or fixing into position an item, part, module (component or assembly) in a manner to allow the proper functioning of the equipment or system.

h. Replace. The act of substituting a serviceable like type part, subassembly, or module (component or assembly) for an unserviceable counterpart.

i. Repair. The application of maintenance services (inspect, test, service, adjust, align, calibrate, replace) or other maintenance actions (welding, grinding, riveting, straightening, facing, remachining, or resurfacing) to restore serviceability to an item by correcting specific damage, fault, malfunction, or failure in a part, subassembly, module (component or assembly), end item, or system.

j. Overhaul. That maintenance effort (service/action) necessary to restore an item to a completely serviceable/operational condition as prescribed by maintenance standards (i.e., DMWR) in appropriate technical publications. Overhaul is normally the highest degree of maintenance performed by the Army. Overhaul does not normally return an item to like new condition.

k. Rebuild. Consists of those services actions necessary for the restoration of unserviceable equipment to a like new condition in accordance with original manufacturing standards. Rebuild is the highest degree of materiel maintenance applied to Army equipment. The rebuild operation includes the act of returning to zero those age measurements (hours, miles, etc.) considered in classifying Army equipments/components.

D-3. Column Entries

a. Column 1, Group Number. Column 1 lists group numbers, the purpose of which is to identify components, assemblies, subassemblies, and modules with the next higher assembly.

b. Column 2, Component/Assembly. Column 2 contains the noun names of components, assemblies, subassemblies, and modules for which maintenance is authorized.

c. Column 3, Maintenance Functions. Column 3 lists the functions to be performed on the item listed in column 2. When items are listed without maintenance functions, it is solely for purpose of having the group numbers in the MAC and RPSTL coincide.

d. Column 4, Maintenance Category. Column 4 specifies, by the listing of a "worktime" figure in the appropriate subcolumn(s), the lowest level of maintenance authorized to perform the function listed in column 3. This figure represents the active time required to perform that maintenance function at the indicated category of maintenance. If the number or complexity of the tasks within the listed maintenance function vary at different maintenance categories, appropriate "worktime" figures will be shown for each category. The number of task-hours specified by the "worktime" figure represents the average time required to restore an item (assembly, subassembly, component module, end item or system) to a serviceable condition under typical field operating conditions. This time includes preparation time, troubleshooting time, and quality assurance/quality control time in addition to the time required to perform the specific tasks identified for the maintenance functions authorized in the maintenance allocation chart. SubColumns of column 4 are as follows:

C - Operator/Crew
O-Organizational
F - Direct Support
H - General Support
D - Depot

e. Column 5, Tools and Equipment. Column 5 specifies by code those common tool sets (no individual tools) and special tools, test and support equipment required to perform the designated function.

f. Column 6, Remarks. Column 6 contains a alphabetic code which leads to the remark in section IV, Remarks, which is pertinent to the item opposite the particular code.

D-4. Tool and Test Equipment Requirement (sect III)

a. Tool or Test Equipment Reference Code. The numbers in this column coincide with the numbers used in the tools and equipment column of the MAC. The numbers indicate the applicable tool or test equipment for the maintenance functions.

b. Maintenance Category. The codes in this column indicate the maintenance category allocated the tool or test equipment.

c. Nomenclature. This column lists the noun name and nomenclature of the tools and test equipment required to perform the maintenance functions.

d. National/NATO Stock Number. This column lists the National/NATO stock number of the specified tool or test equipment.

e. Tool Number. This column lists the manufacturer's part number of the tool followed by the Federal Supply Code for manufacturers (5-digit) in parentheses.

D-5. Remarks (sect IV)

a. Reference Code. This code refers to the appropriate item in section II, column 6.

b. Remarks. This column provides the required explanatory information necessary to clarify items . appearing in section II.

SECTION II MAINTENANCE ALLOCATION CHART
FOR

POWER METER TS-3793/U (HP 436A)

(1) GROUP NUMBER	(2) COMPONENT/ASSEMBLY	(3) MAINTENANCE FUNCTION	(4) MAINTENANCE CATEGORY					(5) TOOLS AND EQPT.	(6) REMARKS
			C	O	F	H	D		
00	Power Meter TS-3793/U HP 436A 6625-01-033-5050	Inspect		0.2				8	
		Test				0.5		1-4,7,8	
		Service				0.8		1-4,7,8	
		Repair				0.9		1-4,7,8	
		Overhaul					2.0	1 - 8	
01	A1A1 Display Assembly	Test				0.2		1,4,7	
		Replace				0.3		7	
		Repair					0.7	1 - 8	
02	A1A2 Pushbutton Switch Assembly	Test				0.2		1,7	
		Replace				0.3		7	
		Repair					0.7	1 - 8	
03	AC Gain Assembly A2	Test				0.2		1 - 3	
		Replace				0.2		7	
		Repair					0.5	1 - 8	
04	A-D Converter Assembly A3	Test				0.2		1 - 3	
		Replace				0.3		7	
		Repair					0.7	1 - 8	
05	Converter Assembly A4	Test				0.3		1 - 3	
		Replace				0.4		7	
		Repair					0.7	1 - 8	
06	Controller Assembly A5	Test				0.3		1 - 3	
		Replace				0.3		7	
		Repair					0.7	1 - 8	
07	Power Reference Oscillator Assembly A8	Test				0.2		1 - 3	
		Replace				0.3		7	
		Repair					0.5	1 - 8	
08	Power Supply Assembly A9	Test				0.2		1 - 3	
		Replace				0.3		7	
		Repair					0.5	1 - 8	

SECTION III AND TEST EQUIPMENT REQUIREMENTS
FOR
POWER METER TS-3793/U (HP 436A)

TOOL OR TEST EQUIPMENT REF CODE	MAINTENANCE CATEGORY	NOMENCLATURE	NATIONAL/NATO STOCK NUMBER	TOOL NUMBER
1	H	DIGITAL VOLTMETER AN/USM-451	6625-00-006-7638	
2	H	POWER METER AN/USM-260A (HP 432A)	6625-00-006-7638	
3	H	THERMISTOR MOUNT (HP 478A-H75)	4931-01-005-3865	
4	H	COUNTER AN/USM-459 (HP 532BA OPT E42)	6625-01-061-8928	
5	D	SXCILOSCOPE AN/USM-281C	6625-00-106-9622	
6	D	DOGIC ANALYZER (HP 1601L)	6625-00-595-7642	
7	H	TOOL KIT TK-105	5180-00-610-8177	
8	O	COMMON TOOLS NECESSARY TO THE PERFORMANCE OF THIS MAINTENANCE FUNCTION ARE AVAILABLE TO MAINTENACE PERSONNEL FOR THE MAINTENANCE CATEGORY LISTED.		

RECOMMENDED CHANGES TO EQUIPMENT TECHNICAL MANUALS

SOMETHING WRONG WITH THIS MANUAL?

THEN. . .JOT DOWN THE DOPE ABOUT IT ON THIS FORM, TEAR IT OUT, FOLD IT AND DROP IT IN THE MAIL!

FROM: (YOUR UNIT'S COMPLETE ADDRESS)
Commander
Stateside Army Depot
ATTN: AMSTA-US
Stateside, N.J. 07703

DATE 10 July 1975

PUBLICATION NUMBER	DATE	TITLE
TM 11-5840-340-12	23 Jan 74	Radar Set AN/MPQ-76

BE EXACT. . .PIN-POINT WHERE IT IS				IN THIS SPACE TELL WHAT IS WRONG AND WHAT SHOULD BE DONE ABOUT IT:
PAGE NO.	PARAGRAPH	FIGURE NO.	TABLE NO.	
2-25	2-28			Recommend that the installation antenna alignment procedure be changed throughout to specify a 2° IFF antenna lag rather than 1°. REASON: Experience has shown that with only a 1° lag, the antenna servo system is too sensitive to wind gusting in excess of 20 knots, and has a tendency to rapidly accelerate and decelerate as it hunts, causing strain to the drive train. Hunting is minimized by adjusting the lag to 2° without degradation of operation.
3-10	3-3		3-1	Item 5, Function column. Change "2 db" to "3db." REASON: The adjustment procedure for the TRANS POWER FAULT indicator calls for a 3 db (500 watts) adjustment to light the TRANS POWER FAULT indicator.
5-6	5-8			Add new step f.1 to read, "Replace cover plate removed in step e.1, above." REASON: To replace the cover plate.
		F03		Zone C 3. On J1-2, change "+24 VDC to "+5 VDC." REASON: This is the output line of the 5 VDC power supply. + 24 VDC is the input voltage.

TYPED NAME, GRADE OR TITLE, AND TELEPHONE NUMBER	SIGN HERE:
SSG I. M. DeSpiritof 999-1776	SSG I. M. DeSpiritof

DA FORM 1 AUG 74 2028-2

P.S.--IF YOUR OUTFIT WANTS TO KNOW ABOUT YOUR MANUAL "FIND," MAKE A CARBON COPY OF THIS AND GIVE IT TO YOUR HEADQUARTERS.

TEAR ALONG DOTTED LINE

RECOMMENDED CHANGES TO EQUIPMENT TECHNICAL MANUALS

SOMETHING WRONG WITH THIS MANUAL?

THEN. . .JOT DOWN THE DOPE ABOUT IT ON THIS FORM, TEAR IT OUT, FOLD IT AND DROP IT IN THE MAIL!

FROM: (YOUR UNIT'S COMPLETE ADDRESS)

DATE

PUBLICATION NUMBER	DATE	TITLE
TM 11-6625-2969-14&P	9 May 80	

BE EXACT. . .PIN-POINT WHERE IT IS

PAGE NO.	PARAGRAPH	FIGURE NO.	TABLE NO.

IN THIS SPACE TELL WHAT IS WRONG AND WHAT SHOULD BE DONE ABOUT IT:

TYPED NAME, GRADE OR TITLE, AND TELEPHONE NUMBER

SIGN HERE:

DA FORM 1 AUG 74 2028-2

P.S.--IF YOUR OUTFIT WANTS TO KNOW ABOUT YOUR MANUAL "FIND," MAKE A CARBON COPY OF THIS AND GIVE IT TO YOUR HEADQUARTERS.

TEAR ALONG DOTTED LINE

FILL IN YOUR UNIT'S ADDRESS

FOLD BACK

DEPARTMENT OF THE ARMY

OFFICIAL BUSINESS

PENALTY FOR PRIVATE USE, $300

POSTAGE AND FEES PAID
DEPARTMENT OF THE ARMY
DOD-314

U.S.MAIL

Commander
US Army Communications and
Electronics Materiel Readiness Command
ATTN: DRSEL-ME-MQ
Fort Monmouth, New Jersey 07703

FOLD BACK

TEAR ALONG DOTTED LINE

REVERSE OF DA FORM 2028-2

RECOMMENDED CHANGES TO EQUIPMENT TECHNICAL MANUALS

THEN. . .JOT DOWN THE DOPE ABOUT IT ON THIS FORM, TEAR IT OUT, FOLD IT AND DROP IT IN THE MAIL!

SOMETHING WRONG WITH THIS MANUAL?

FROM: (YOUR UNIT'S COMPLETE ADDRESS)

DATE

PUBLICATION NUMBER	DATE	TITLE
TM 11-6625-2969-14&P	9 May 80	

BE EXACT. . .PIN-POINT WHERE IT IS

PAGE NO.	PARAGRAPH	FIGURE NO.	TABLE NO.

IN THIS SPACE TELL WHAT IS WRONG AND WHAT SHOULD BE DONE ABOUT IT:

TYPED NAME, GRADE OR TITLE, AND TELEPHONE NUMBER

SIGN HERE:

DA FORM 1 AUG 74 2028-2

P.S.--IF YOUR OUTFIT WANTS TO KNOW ABOUT YOUR MANUAL "FIND," MAKE A CARBON COPY OF THIS AND GIVE IT TO YOUR HEADQUARTERS.

TEAR ALONG DOTTED LINE

FILL IN YOUR UNIT'S ADDRESS

FOLD BACK

DEPARTMENT OF THE ARMY

OFFICIAL BUSINESS

PENALTY FOR PRIVATE USE, $300

POSTAGE AND FEES PAID
DEPARTMENT OF THE ARMY
DOD-314

Commander
US Army Communications and
Electronics Materiel Readiness Command
ATTN: DRSEL-ME-MQ
Fort Monmouth, New Jersey 07703

TEAR ALONG DOTTED LINE

FOLD BACK

REVERSE OF DA FORM 2028-2

RECOMMENDED CHANGES TO EQUIPMENT TECHNICAL MANUALS

SOMETHING WRONG WITH THIS MANUAL?

THEN. . .JOT DOWN THE DOPE ABOUT IT ON THIS FORM, TEAR IT OUT, FOLD IT AND DROP IT IN THE MAIL!

FROM: (YOUR UNIT'S COMPLETE ADDRESS)

DATE

PUBLICATION NUMBER	DATE	TITLE
TM 11-6625-2969-14&P	9 May 80	

BE EXACT. . .PIN-POINT WHERE IT IS

PAGE NO.	PARAGRAPH	FIGURE NO.	TABLE NO.

IN THIS SPACE TELL WHAT IS WRONG AND WHAT SHOULD BE DONE ABOUT IT:

TYPED NAME, GRADE OR TITLE, AND TELEPHONE NUMBER

SIGN HERE:

DA FORM 1 AUG 74 2028-2

P.S.--IF YOUR OUTFIT WANTS TO KNOW ABOUT YOUR MANUAL "FIND," MAKE A CARBON COPY OF THIS AND GIVE IT TO YOUR HEADQUARTERS.

TEAR ALONG DOTTED LINE

FILL IN YOUR UNIT'S ADDRESS

FOLD BACK

DEPARTMENT OF THE ARMY

OFFICIAL BUSINESS

PENALTY FOR PRIVATE USE, $300

POSTAGE AND FEES PAID
DEPARTMENT OF THE ARMY
DOD-314

U.S. MAIL

Commander
US Army Communications and
Electronics Materiel Readiness Command
ATTN: DRSEL-ME-MQ
Fort Monmouth, New Jersey 07703

FOLD BACK

TEAR ALONG DOTTED LINE

REVERSE OF DA FORM 2028-2

By Order of the Secretary of the Army:

E. C. MEYER
General, United States Army
Chief of Staff

Official:
J. C. PENNINGTON
Major General, United States Army
The Adjutant General

Distribution:
Active Army:
TSG (1)
USAARENBD (1)
USAINSCOM (2)
TRADOC (2)
DARCOM (1)
TECOM (2)
OS Maj Comd (2)
USACC (2)
HISA (FT Monmouth) (21)
Armies (1)
USASIGS (10)
Svc Colleges (1)
Ft Richardson (CERCOM Ofc) (1)
Ft Carson (5)
Ft Gillem (10)
WSMR (1)
USAERDAA (1)
USAERDAW (1)
Army Dep (1) except:
LBAD (10)
SAAD (30)
TOAD (14)
SHAD (3)
USA Dep (1)
Sig Sec USA Dep (1)
Units org under fol TOE:
(1 copy each unit)
29-134
29-136
(2 copies each unit)
29-207
29-610

ARNG: None.
USAR: None.
For explanation of abbreviations used, see AR 310-50.

PIN: 044937-000

This fine document...

Was brought to you by me:

Liberated Manuals -- free army and government manuals

Why do I do it? I am tired of sleazy CD-ROM sellers, who take publicly available information, slap “watermarks” and other junk on it, and sell it. Those masters of search engine manipulation make sure that their sites that sell free information, come up first in search engines. They did not create it... They did not even scan it... Why should they get your money? Why are not letting you give those free manuals to your friends?

I am setting this document FREE. This document was made by the US Government and is NOT protected by Copyright. Feel free to share, republish, sell and so on.

I am not asking you for donations, fees or handouts. If you can, please provide a link to liberatedmanuals.com, so that free manuals come up first in search engines:

<A HREF=http://www.liberatedmanuals.com/>Free Military and Government Manuals</A>

- Sincerely
  Igor Chudov
  http://igor.chudov.com/
- Chicago Machinery Movers