International Journal of Innovation in Science and Mathematics
Volume 2, Issue 2, ISSN (Online): 2347–9051

Power Quality Improvement in Wind Energy System using STATCOM

Devashish Dey
M.Tech (Electrical Power and Energy System)
IET Lucknow (UP) India
Email: deylucknow2007@rediffmail.com

Prof. (Dr.) Bharti Dwivedi
Electrical Engineering Department
IET Lucknow (UP), India
Email: bharti.dwivedi@ietlucknow.ac.in

***Abstract* – Rising pollution levels and worrying changes in climate, arising in great part from energy producing processes, demand the reduction of ever-increasing environmentally damaging emissions. Additionally an emerging awareness of finiteness of the earth's fossil fuel reserves has caused many people to look for alternatives. Generating electricity, particularly by making use of renewable resources, allows the attainment of notable effects. Thereby the immense potentials of wind energy on the earth assume great importance. The worldwide potential of wind power means that its contribution to electricity production can be of significant proportions. But there many constraints in using wind energy to optimum level. In this paper control scheme is proposed by using STATCOM which relates to power quality issues of grid-connected wind turbines and the interaction between wind turbines and the grid. In particular, this control scheme concentrates on grid-connected wind turbine with squirrel cage induction generator during continuous operation, and the solution of various power quality issues.**

***Keywords* – Wind Turbine, Power Quality, Induction Generator, STATCOM, Non Linear Load.**

I. INTRODUCTION

The total wind power generation in the world has increased from 16000MW in 2000 to 283GW by the end of August'2013. Wind farms generate carbon dioxide free electricity in more than 80 countries, 24 of which have at least 1000MW. India has installed some 20GW of wind power up till October 2013. Main reasons for this development are environmental concerns, kyto targets and improved efficiency in terms of cost of new wind farms. As number of wind farms is increasing, problems related to it should also be checked. Main concerns will be voltage profile and reactive power compensation. Some constraints technically related to integration of wind farms are voltage profile and stability. Up till now mechanical switched capacitors and tap changing transformers are used to solve power quality problems. These can improve power factor and voltage regulations but power and voltage fluctuations and harmonics is still a question mark on them. Their repeatedly switching can cause resonance and overvoltage transients that generate stress on turbine gear box increasing cost and maintenance.

Now a days, main role in distributed energy system and in integration of wind farms into electrical grid, is of power electronic switches. These has undergone a fast evolution, due to two reasons, what comes first is their fast switching and high power handling and second one is real time microprocessors which causes fast and reliable control. The wind generating system causes disturbances into the grid. Generally induction generator is used to connect wind energy system with the grid. The induction generator is cost effective and robust. However there is requirement of reactive power compensation as when active power is varied due to variation in wind, this consequently affects voltage profile. Hence a good scheme is required in wind farms in normal operating conditions to maintain desired voltage profile and consequently desired active power [1]. STATCOM is viewed as important VAR compensator as it has fast time response and good support to voltage stability. It has low cost and faster switching; hence it is one of the choices for integrating wind energy system into electricity grid. First in this paper some advance power electronics schemes are discussed. After that how STATCOM can improve voltage profile is discussed [3].

II. WIND ENERGY SYSTEMS

A. Variable Speed Wind Turbines:

Wind energy has developed up to a level where it is well recognized as a utility generation technology. Wind turbine technology has undergone a dramatic transformation during the last 15 years, using the latest power electronics devices. In last few years wind turbine market has shown tremendous growth. Wind power generation involve different types of wind turbine design available in market. Study of these is essential for integration of wind energy system into the grid. Technologies are available for variable speed conditions to optimize the wind energy generation. Reactive and active power can be controlled easily in case of variable speed turbines. Flicker problems are less and voltage through reactive power control can be done by varying reactive power. Power convertors count to about 7% of the total components [2], [9].

B. Wind Power Technologies:

Variable speed operation in wind energy system has shown rapid growth in last few years. This can be achieved through decoupling of grid electrical frequency and turbine mechanical frequency. This is done by ac-dc-ac convertors.

1) Variable-Speed Concept Utilizing Doubly Fed Induction Generator (DFIG):

In this type of turbine stator is connected to grid and convertor feeds the rotor. This converter, thus decouple mechanical and electrical frequencies and make variable-speed operation possible. As the convertor used is of smaller power rating, turbine cannot operate at rated speed. The rotor speed span is double the size of convertor

and turbine. Losses are less as convertor size is small. The control possibilities of the reactive power are similar to the full power-converter system [10], [11].

2) Variable-Speed Concept Utilizing Full-Power Converter:

In this also decoupling concept is used. Rectification is done from generator side and then through dc link it is converted back to suitable ac energy for the grid. The majority does not use induction generator with gear box as these introduces additional losses instead multi-pole synchronous generators are used [12].

3) Semiconductor-Device Technology:

Power semiconductor devices with better electrical characteristics and lower prices are the key components of power electronics variable speed drives. The insulated gate bipolar transistor (IGBT) is now the main component for power electronics and also for wind-turbine applications. These are used very extensively for high power requirement. Recently, GTO integrated with delicate hard drive circuit, known as the integrated gate control thyristor (IGCT) has been developed with a large safe operation area (SOA), lower switching losses, and a short storage time [1]. The comparison between IGCT and IGBT for frequency converters that are used, especially in wind turbines, is given below:

1) IGCTs have lesser switching frequency than IGBTs.
2) Thermal stress is higher in IGCTs than IGBTs.
3) IGCTs have lower ON sate voltage drop than IGBTs.

Overall IGBTs are better choice for wind turbine applications.

C. Grid-Connection Standards for Wind Farms

1) Voltage Fault Ride-Through Capability of Wind Turbines:

Consumer power quality should not be compromised as wind power is increased so that a turbine should continue to be connected and contribute to the grid in case of a problem such as voltage sag. Wind energy system should operate as conventional power plants, supplying active and reactive powers, immediately after the fault occurred. Thus, several utilities have introduced special grid connection codes for wind-farm developers, covering reactive power control, frequency response, and fault ride through. They define the operational boundary of a wind turbine connected to the network in terms of frequency range, voltage tolerance, power factor, and fault ride through. Among all these requirements, fault ride through is regarded as the main challenge to the wind-turbine manufacturers [13].

2) Power-Quality Requirements for Grid-Connected Wind Turbines:

The Wind turbine measurement codes for power as per International standards are developed by the International Electro-technical Commission (IEC), IEC standard 61400-21, [4] describes the procedure for determining the power quality characteristics of the wind turbine. The standard norms are specified. IEC 61400-21: Wind turbine generating system, part-21. Measurement and Assessment of power quality characteristic of grid connected wind turbine IEC 61400-13: Wind Turbine—measuring procedure in determining the power behavior. IEC 61400-3-7: Assessment of emission limit for fluctuating load IEC 61400-12: Wind Turbine performance. The varying voltage is due to the wind velocity which is in direct connection with real and reactive power changes. The varying voltage types are given below:

1) Voltage Sag.
2) Voltage Dip/Voltage Swells.
3) Short Interruptions/ Long duration voltage variation.

Power convertors are responsible for harmonics. These should be controlled to the range which does not cause disturbance in the system. To ensure the harmonic voltage within limit, each source of harmonic current can allow only a limited contribution, as per the IEC-61400-36 guideline. The rapid switching gives a large reduction in lower order harmonic current compared to the line commutated converter, but the output current will have high frequency current and can be easily filter-out.

The way of connecting the wind generating system into the power system highly influences the power quality. Thus the operation and its influence on power system depend on the structure of the adjoining power network.

The self excitation of wind turbine generating system (WTGS) with an asynchronous generator takes place after disconnection of wind turbine generating system (WTGS) with local load. The risk of self excitation arises especially when WTGS is equipped with compensating capacitor. The capacitor connected to induction generator provides reactive power compensation. However the voltage and frequency are determined by the balancing of the system. The disadvantages of self excitation are the safety aspect and balance between real and reactive power.

The voltage variation, flicker, harmonics causes the mal-function of equipments namely microprocessor based control system, programmable logic controller; adjustable speed drives, flickering of light and screen. It may leads to tripping of contractors, tripping of protection devices, stoppage of sensitive equipments like personal computer, programmable logic control system and may stop the process and even can damage of sensitive equipments. Thus it degrades the power quality in the grid.

III. Power Quality Improvement

STATCOM helps in injecting current into the grid in such a manner that source current becomes approximately in phase with source voltage. Source current becomes harmonic less as these injected current cancels out the reactive power component of load and induction generator current. Hence there is much better quality of power we can get. First grid voltage is sensed through sensor and then corresponding current is given to the inverter [8]. The required connection is done at point of common coupling (PCC) as shown in Fig.1.

A. Wind Energy System Generation:

Due to simplicity the induction generator is used, it does not require a field circuit separately; it can accept loads varying in nature. These are inherently protected from short circuit. The wind power of the system is given as

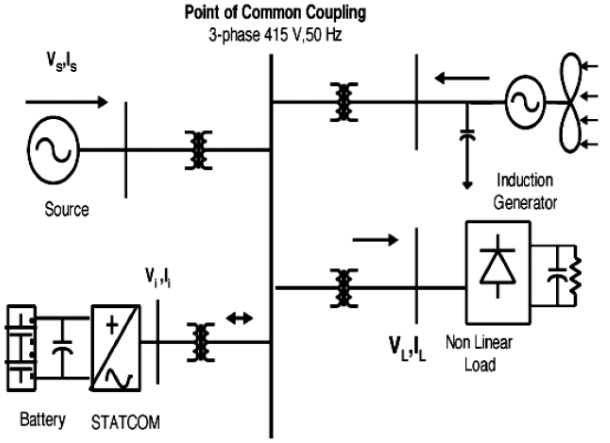

Fig.1. Grid connected system for power quality improvement.

$$P_{wind} = \frac{1}{2}\rho A V_{wind}^3$$

where $\rho(kg/m^3)$ = air density

$A(m^2)$ = area swept by the blade

$P_{wind}\,(m/s)$ = wind speed

Extraction of total power of wind is not possible so there is power coefficient is defined as under which shows the fraction of power extracted through the wind,

$$P_{mech} = C_p P_{wind}$$

Where C_p is wind power coefficient, that depends on operating conditions and type of wind turbine. Mechanical power developed is given by

$$P_{mech} = \frac{1}{2}\rho\pi R^2 V_{wind}^3 C_p$$

Where R is radius of the blade (m)

B. Wind Power BESS

Although there are many kinds of energy storage medium, various types of utility scale BESS have been in use for some time. These include the lead–acid battery facility [5]. BESS possess some desirable electrical qualities: quick response to load changes and the relatively high round-trip efficiency of some 60%–80%. Amongst the batteries, lead–acid, vanadium Redox, and NaS batteries have shown much promise for large-scale wind power schemes. In the literature, one most common form of battery electrical performance data supplied by manufacturers is the set of battery terminal voltage (*V*dc) versus *f* curves under various constant current charge/ discharge conditions, such as the one shown in Fig. 2 [4].

The data are often given at stipulated ambient temperature conditions when the battery is in its pristine state. For voltage regulation BESS is used. It stabilizes the grid by injecting and absorbing reactive power. It maintains dc voltage at capacitor constant. It also has fast control over transmission and distribution. By charge and discharge method, the BESS can be used to level the power fluctuations. [5] The battery is connected in parallel to the dc capacitor of STATCOM. The STATCOM is a three-phase voltage source inverter having the capacitance on its DC link and connected at the point of common coupling. The STATCOM injects a compensating current of variable magnitude and frequency component at the bus of common coupling.

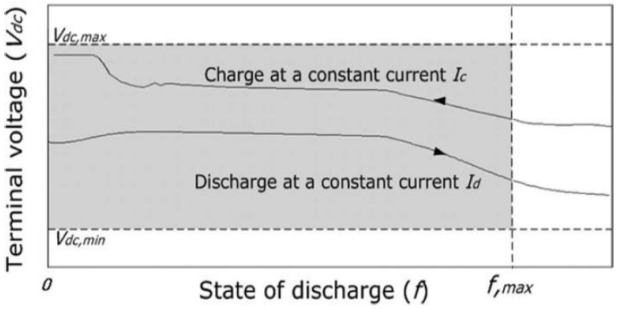

Fig.2. *V*dc versus *f* curves under constant charging/discharging current conditions of a typical electrochemical battery. Shaded area corresponds to the battery feasible operating zone.

C. Energy System Operation:

Between induction generator and non linear load, shunt STATCOM is connected at point of common coupling. Through variations in STATCOM output quality of power is tried to be maintained. A STATCOM using IGBT is proposed for reactive power control of induction generator and non linear loads is shown in Fig. 3.

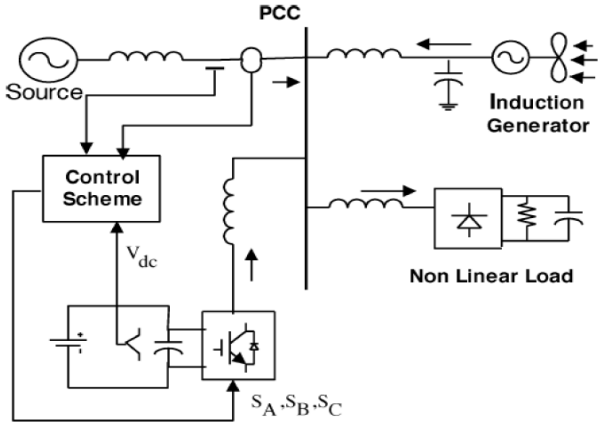

Fig.3. System operational scheme in grid system.

A STATCOM can improve power system performance as follows: The dynamic voltage control in transmission and distribution systems. The power oscillations need damping in power transmission systems. The transient stability, the voltage flicker control, and the control of not only reactive power but also (if needed) active power in the connected line, requiring a dc energy source.

In principle, the exchange of real power and reactive power between the STATCOM and the power system can be controlled by adjusting the amplitude and phase of the converter output voltage. In the case of an ideal lossless power converter, the output voltage of the converter is controlled to be in phase with that of the power system. In this case, there is no real power circulated in the STATCOM; therefore, a real power source is not needed. To operate the STATCOM in capacitive mode or VAR generation, +Q, the magnitude of the converter output voltage is controlled to be greater than the voltage at the PCC. In contrast, the magnitude of the output voltage of the converter is controlled to be less than that of the power

system at the PCC on order to absorb reactive power or to operate the STATCOM in inductive mode, -Q. However, in practice, the converter is associated with internal losses caused by non ideal power semiconductor devices and passive components. As a result, without any proper controls, the capacitor voltage will be discharged to compensate these losses, and will continuously decrease in magnitude. To regulate the capacitor voltage, a small phase shift is introduced between the converter voltage and the power system voltage. A small lag of the converter voltage with respect to the voltage at the PCC causes real power to flow from the power system to the STATCOM, while the real power is transferred from the STATCOM to the power system by controlling the converter voltage so that it leads the voltage at the PCC.

A STATCOM can provide fast capacitive and inductive compensation and is able to control its output current independently of the AC system voltage. There are mainly two approaches to mitigate power quality problem. The first approach is load conditioning, which ensures that equipment is made less sensitive to power disturbances, allowing the operation even under significant voltage distortion. The other solution is to install line conditioning system that suppresses the power disturbances.

IV. Control System

Bang-Bang controller is used for injecting current into the grid for control purpose. Hysteresis control is used by the controller. Control variable is kept within the range of hysteresis boundaries. The control system scheme for generating the switching signals to the STATCOM is shown in Fig. 4.

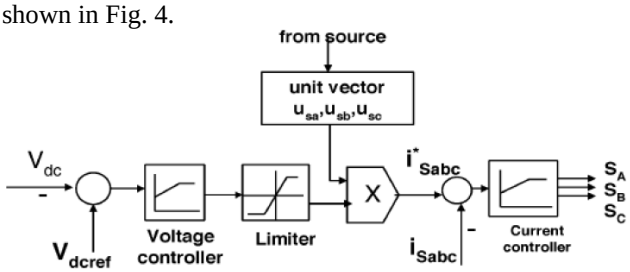

Fig.4. Control system scheme.

The control algorithm needs the measurements of several variables such as three-phase source current, i_{Sabc}, DC voltage V_{dc}, inverter current i_{iabc} with the help of sensor. The current control block, receives an input of reference current i^*_{Sabc} and actual current are i_{Sabc} subtracted so as to activate the operation of STATCOM in current control mode [6], [7].

A. Synchronizing Grid

Through sampling frequency method source voltage amplitude is calculated by source voltage (V_{sa}, V_{sb}, V_{sc}) and is shown as V_{sm}

$$V_{sm} = \left\{V_{sa}^2 + V_{sb}^2 + V_{sc}^2\right\}^{\frac{1}{2}}$$

The in-phase unit vectors are obtained from AC source-phase voltage and the RMS value of unit vector U_{sa}, U_{sb}, U_{sc} as shown below

$$U_{sa} = \frac{V_{sa}}{V_{sm}}, U_{sb} = \frac{V_{sb}}{V_{sm}}, U_{sc} = \frac{V_{sc}}{V_{sm}}$$

The in-phase generated reference currents are derived using in-phase unit voltage template as given below

$$i^*_{sa} = I.U_{sa}, i^*_{sb} = I.U_{sb}, i^*_{sc} = I.U_{sc}$$

Where, I is magnitude of filtered source voltage for respective phases. This ensures that the source current is controlled to be sinusoidal. The unit vectors implement the important function in the grid connection for the synchronization for STATCOM. This method is simple, robust and favorable as compared with other methods [7].

Bang-Bang current controller is implemented in the current control scheme. The reference current is generated and actual current are detected by current sensors and are subtracted for obtaining a current error for a hysteresis based bang-bang controller. Thus the ON/OFF switching signals for IGBT of STATCOM are derived from hysteresis controller. The switching function S_A for phase 'a' is expressed as

$$i_{sa} < \left(i^*_{sa} - HB\right) \rightarrow S_A = 0$$
$$i_{sa} > \left(i^*_{sa} - HB\right) \rightarrow S_A = 1$$

where HB is a hysteresis current-band, similarly the switching functions S_B, S_C can be derived for phases 'b' and 'c' [8].

V. Simulations and Result

The proposed control scheme is simulated using SIMULINK in power system block set. The system parameter for given system is given Table 1. Table 1 System parameters

S.No.	Parameters	Ratings
1	Grid voltage	3-phase, 415V, 50Hz
2	Induction Generator	3.35 KVA, 415V, 50Hz, P=4, Rs=0.01Ω, Rr=0.015 Ω, Ls=0.06H, Lr=0.06H.
3	Inverter Parameters	DC link Voltage=800V DC link Capacitance=100μF Switching frequency =2kHz
4	IGBT rating	Collector Voltage =1200V, Forward Current =50A,Gate voltage = 20V Power dissipation =310W
5	Load Parameter	Non-Linear Load 25kW, 50kVAR

The wind energy generating system is connected with grid having nonlinear load. The performance of the system is measured by switching the STATCOM at time t = 0.2 s in the system. The response of STATCOM to the step change (increase) in additional load at 1.0 s is shown in the simulation. When STATCOM controller is switched ON, without change in any other load condition parameters, it starts improvement in reactive demand as

well as mitigation of harmonic current. The dynamic performance is also carried out by step change in the load, when applied at 1.0 s. This additional demand is fulfilled by STATCOM compensator. Thus, STATCOM can regulate the available real power from source. The result of source current, load current are shown in Fig. 5(b) and Fig. 5(c) respectively. While injected inverter current is shown in Fig 5(a):

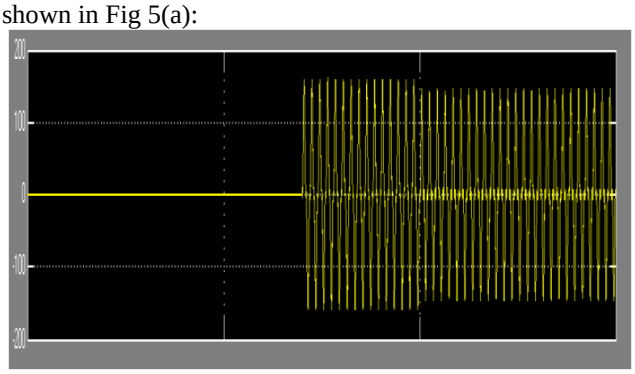

Fig.5. (a) Three phase injected inverter Current

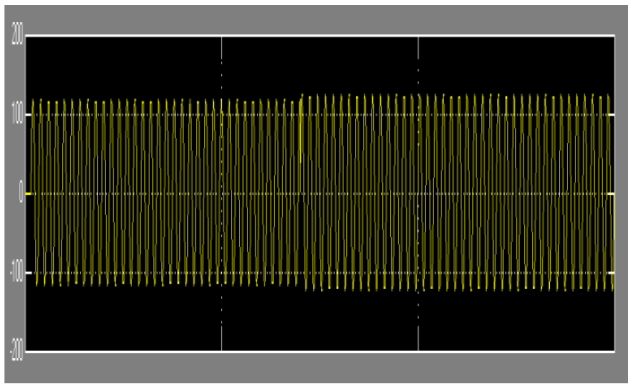

Fig.5. (b) Source Current

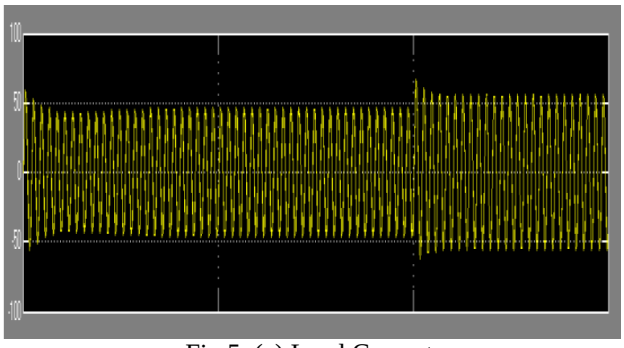

Fig.5. (c) Load Current

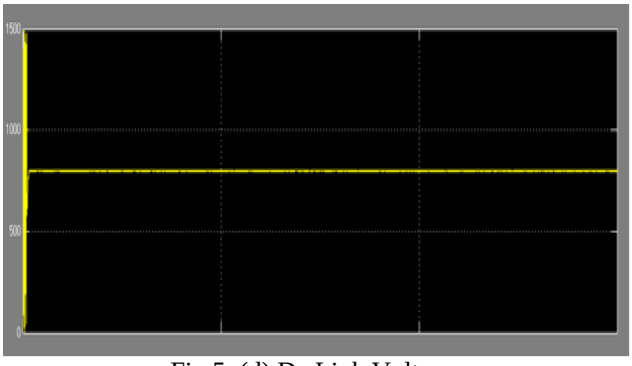

Fig.5. (d) Dc Link Voltage

The DC link voltage regulates the source current in the grid system, so the DC link voltage is maintained constant across the capacitor as shown in Fig.5 (d).

It is observed that the source current on the grid is affected due to the effects of nonlinear load and wind generator, thus purity of waveform may be lost on both sides in the system. The inverter output voltage under STATCOM operation with load variation is shown be Fig. 6(a). The source current with and without STATCOM operation is shown in Fig. 6(b). This shows that the unity power factor is maintained for the source power when the STATCOM is in operation:

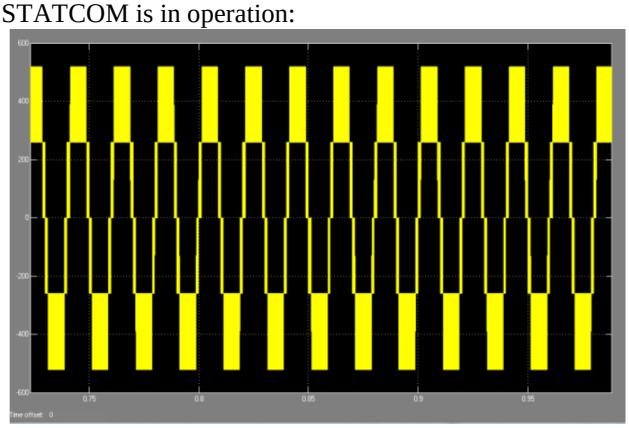

Fig.6. (a) STATCOM Output Voltage

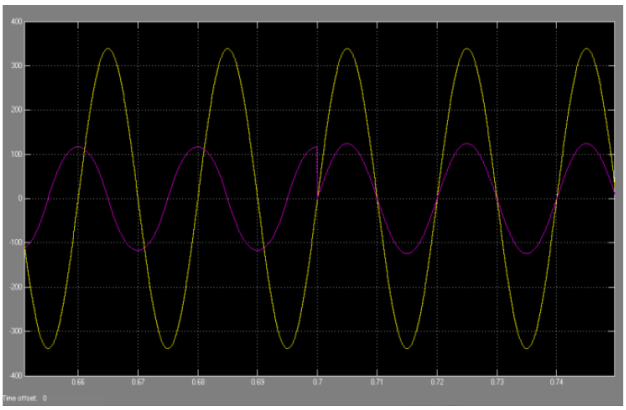

Fig.6. (b) Supply Voltage and Current at PCC

VII. Conclusion

This paper presents scheme for control of quality of power in wind energy system using STATCOM. Power quality problems and its effects on consumer and utility are discussed. STATCOM control scheme in MATLAB environment is done. Harmonics is mitigated through its use. Utilization of transmission line is enhanced as voltage and current at source are in phase and reactive power demand is also compensated at induction generator and at the load end when STATCOM is connected at PCC of power system. Performance of the scheme proposed is as per power quality norms specified under IEC standards.

References

[1] J. Manel, "Power Electronic System for Grid Integration of Renewable Energy Source: A Survey," IEEE Trans. Ind. Electron., vol. 53, no. 4, pp. 1002–1014, 2006, Carrasco.

[2] S. Heier, "Grid Integration of Wind Energy Conversions". Hoboken, NJ: Wiley, 2007, pp. 256–259.
[3] C. Han, A. Q. Huang, M. Baran, S. Bhattacharya, and W. Litzenberger, "STATCOM Impact Study on the Integration of a Large Wind Farm into a Weak Loop Power System", IEEE Trans. Energy Conv., vol. 23, no. 1, pp. 226–232, Mar. 2008.
[4] D. L. Yao, S. S. Choi, K. J. Tseng, and T. T. Lie, "A statistical Approach to the Design of a Dispatchable Wind Power-Battery Energy Storage System", IEEE Trans. Energy Conv., vol. 24, no. 4, Dec. 2009.
[5] R. S. Bhatia, S. P. Jain, D. K. Jain, and B. Singh, "Battery Energy Storage System for Power Conditioning of Renewable Energy Sources", Proc. Int. Conf. Power Electron Drives System, Jan. 2006, vol. 1, pp. 501–506.
[6] Fu. S. Pai and S.-I. Hung, "Design and Operation of Power Converter for Micro-turbine Powered Distributed Generator with Capacity Expansion Capability", IEEE Trans. Energy Conv., vol. 3, no. 1, pp. 110–116, Mar 2008.
[7] M. I. Milands, E. R. Cadavai, and F. B. Gonzalez, "Comparison of Control Strategies for Shunt Active Power Filters in Three Phase Four Wire System," IEEE Trans. Power Electron., vol. 22, no. 1, pp. 229–236, Jan. 2007.
[8] S. W. Mohod and M. V. Aware, "Power Quality Issues & It's Mitigation Technique in Wind Energy Conversion," in Proc. of IEEE Int. Conf. Quality Power & Harmonic, Wollongong, Australia, 2008.
[9] G. L. Johnson, "Wind Energy Systems", Englewood Cliffs, NJ: Prentice-Hall, 1985.
[10] S. Muller, M. Deicke, and R. W. De Doncker, "Doubly Fed Induction Generator Systems for Wind Turbines", IEEE Ind. Appl. Mag., vol. 8, no. 3, pp. 26–33, May/Jun. 2002.
[11] F. M. Hughes, O. Anaya-Lara, N. Jenkins, and G. Strbac, "Control of DFIG-based Wind Generation for Power Network Support", IEEE Trans. Power Syst., vol. 20, no. 4, pp. 1958–1966, Nov. 2005.
[12] M. Orabi, F. El-Sousy, H. Godah, and M. Z. Youssef, "High-performance Induction Generator-Wind Turbine Connected to Utility Grid", Proc 26th Annu. INTELEC, Sep. 19–23, 2004, pp. 697–704.
[13] E.ON Netz "Grid Code", Bayreuth, Germany: E.ON Netz GmbH, Aug. 1, 2003.

AUTHOR'S PROFILE

Devashish Dey

received B.Tech. degree in electrical and electronics engineering from International Institute of Management and Technology, Meerut, India in 2007. He is pursuing for M.Tech. degree in Institute of Engineering and Technolgy, Lucknow, India. He was Lecturer in Azad Institute of Engineering and Technology, Lucknow, India from 2008 to 2009. From 2009 to 2013 he was Lecturer in Sunderdeep Engineering College, Ghaziabad, India. Presently he is Lecturerwith Department of Electronics Engineering in HiTech Institute of Engineering and Technology, Ghaziabad.

Dr. Bharti Dwivedi

is Professor and Head of Electrical Engg Department at Institute of Engineering & Technology, Lucknow. She has nearly 70 papers published in various International and National Journals and Conferences. She has authored Fundamentals of Electrical Engineering' with Wiley (India). She has also guided 04 Ph.D. candidates and is guiding 06 candidates at present.