Name_____ Period _____

This review counts as a quiz grade. You must show work to receive credit. Due at the BEGINNING of your final.

PreCalc Final Exam Review

Multiple Choice

Identify the choice that best completes the statement or answers the question.

1. Determine which binomial is *not* a factor of $4x^4 - 21x^3 - 46x^2 + 219x + 180$.
   a. $x + 4$ b. $x + 3$ c. $x - 5$ d. $4x + 3$

2. Which of the following sums has the largest value?
   a. $\sum_{k=1}^{100}(k+2)$ b. $\sum_{k=1}^{100}2k$ c. $\sum_{k=1}^{100}2^k$ d. $\sum_{k=1}^{100}(\frac{1}{2})^k$

3. The sum of the geometric series $\frac{1}{4} + \frac{1}{2} + 1 + \ldots + 2048$ is
   a. 2047.75 b. 2049.75 c. 4095.75 d. 4096.75

4. Evaluate the related series of the sequence 22, 28, 34, 40, 46.
   a. 108 b. 147 c. 170 d. 216 e. 256

5. Determine the number of terms in the geometric series $-4 + 16 - 64 + 256\ldots$, $S_n = 52428$.
   a. 6 b. 7 c. 8 d. 9 e. 10

6. What kind of symmetry does $y = \sqrt{x-2}$ have?
   a. x-axis b. y-axis c. origin d. none

7. If $f(x) = x^2 + 2x - 1$ and $g(x) = 3x - 1$, find $f(g(2))$:
   a. 34 b. 7 c. 20 d. 5

8. If $f(x) = x^2 + 4x - 2$ and $g(x) = \sqrt{x+1}$, find $(g \circ f)(3)$:
   a. 19 b. 2 c. 38 d. $\sqrt{20}$

9. Find the inverse of the following function:
   $f(x) = \frac{x-1}{x+2}$
   a. $f^{-1}(x) = \frac{x+2}{x-1}$ b. $f^{-1}(x) = \frac{x-2}{x+1}$
   c. $f^{-1}(x) = \frac{-2x-1}{x-1}$ d. $f^{-1}(x) = \frac{x-2}{x+1}$

Short Answer

10. Suppose $f(x) = 4x - 2$ and $g(x) = -2x + 1$. Find the value of $\frac{f(5)}{g(-3)}$.

11. Find the zeros of $y = x(x-3)(x-2)$. Then graph the equation.

Use Pascal's Triangle to expand the binomial.

15. $(d + 3)^7$

16. Use the Binomial Theorem to expand $(d - 3b)^3$.

Write the equation in logarithmic form.

17. $6^4 = 1,296$

12. Write a polynomial function in standard form with zeros at 5, –4, and 1.

13. Divide $3x^3 - 3x^2 - 4x + 3$ by $x + 3$.

Solve the equation by graphing.

14. $x^2 + 7x + 19 = 0$

Evaluate the logarithm.

18. $\log_5 \frac{1}{625}$

Name_____ Period _____

This review counts as a quiz grade. You must show work to receive credit. Due at the BEGINNING of your final.

The pH of a liquid is a measure of how acidic or basic it is. The concentration of hydrogen ions in a liquid is labeled $\left[H^+\right]$. Use the formula $pH = -\log[H^+]$ to answer questions about pH.

19. Find the pH level, to the nearest tenth, of a liquid with $[H^+]$ about 6.5×10^{-3}.

20. Write the equation $\log_{32} 8 = \frac{3}{5}$ in exponential form.

Write the expression as a single logarithm.
Find any points of discontinuity for the rational function.

21. $5\log_b q + 2\log_b y$

22. $\log_3 4 - \log_3 2$

Sketch the asymptotes and graph the function.

23. $y = \dfrac{2}{x+2} - 3$

24. Write an equation for the translation of $y = \dfrac{4}{x}$ that has the asymptotes $x = 7$ and $y = 6$.

25. $y = \dfrac{(x+6)(x+2)(x+8)}{(x+9)(x+7)}$

26. Describe the vertical asymptote(s) and hole(s) for the graph of $y = \dfrac{(x-5)(x-2)}{(x-2)(x+4)}$.

27. Write an equation of a parabola with a vertex at the origin and a focus at (–2, 0).

28. Identify the vertex, focus, and directrix of the graph of $y = \frac{1}{8}(x-2)^2 + 5$.

29. Write an equation in standard form for the circle.

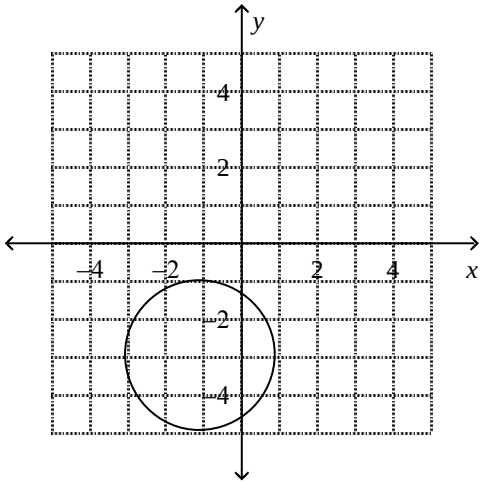

30. Graph $(x+4)^2 + (y-7)^2 = 49$.

31. Find the foci of the ellipse with the equation $18x^2 + 36y^2 = 648$. Graph the ellipse.

32. Write an equation of an ellipse with center (3, –3), vertical major axis of length 12, and minor axis of length 6.

33. Write an equation of an ellipse with center (3, 4), horizontal major axis of length 16, and minor axis of length 10.

34. Graph the relation.
$\left\{(0, 3), \left(2, 4\frac{1}{2}\right), \left(1\frac{1}{2}, 5\right), (4, -1), (-4, 4)\right\}$

35. Is the relation {(–2, 5), (–1, 5), (–1, 4), (–1, –3), (–2, 0)} a function? Explain.

36. Graph $y = 2x^2 - 7$.

Name_____ Period _____

This review counts as a quiz grade. You must show work to receive credit. Due at the BEGINNING of your final.

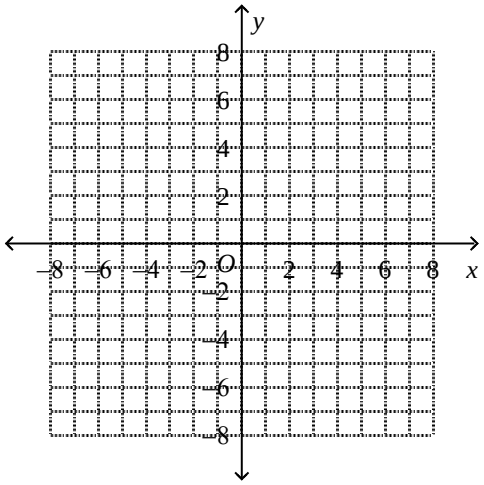

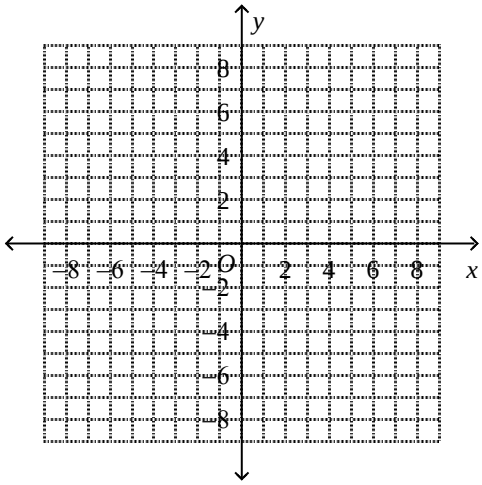

37. Graph $y = x^2 + 3x + 2$. Identify the vertex and the axis of symmetry.

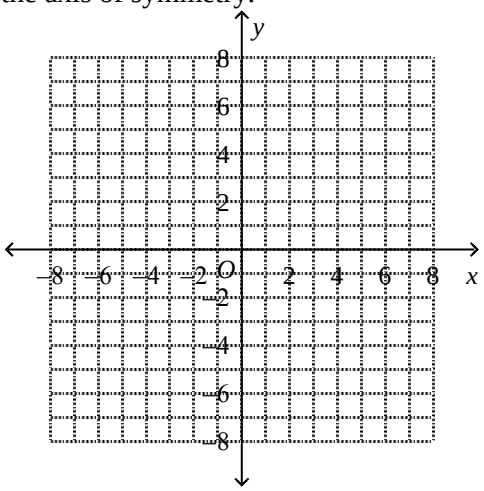

38. Graph $y = 3x^2 - 12x + 13$. What is the minimum value of the function?

39. Use the graph of $y = (x - 3)^2 + 5$.
    - **a.** If you translate the parabola to the right 2 units and down 7 units, what is the equation of the new parabola in vertex form?
    - **b.** If you translate the original parabola to the left 2 units and up 7 units, what is the equation of the new parabola in vertex form?
    - **c.** How could you translate the new parabola in part (a) to get the new parabola in part (b)?

40. Suppose you cut a small square from a square of fabric as shown in the diagram. Write an expression for the remaining shaded area. Factor the expression.

Name_____ Period _____

This review counts as a quiz grade. You must show work to receive credit. Due at the BEGINNING of your final.

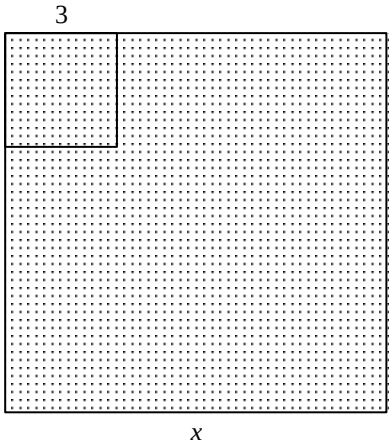

41. Without graphing, determine whether the function $y = (5.2)^x$ represents exponential growth or exponential decay.

42. Without graphing, determine whether the function $y = 7\left(\frac{2}{3}\right)^x$ represents exponential growth or exponential decay.

43. Consider the sequence 16, –8, 4, –2, 1, ...
    a. Describe the pattern formed in the sequence.
    b. Find the next three terms.

44. In an arithmetic sequence, the third term is 11 and the eighth term is 46. Find the sequence.

45. How many terms are in each sequence?

    a) 2, 6, 10, … , 94 b) -9, -4, 1, … , 171 c) 4, 15, 26, … , 213
    d) 18, 13, 8, … , -102 e) 5, 12, 19, … , 222 f) 42, 29, 16, … , -673

46. Find the missing terms in the arithmetic sequence:
    a) _, 9, 16, _, _; b) _, _, 8, 2, _; c) 12, _, 22, _, _;
    d) 3, _, _, 24, _; e) _, 4, _, _, -8; f) 15, _, _, _, -21

Essay

47. Suppose you invest $580 at 10% compounded continuously.
    a. Write an exponential function to model the amount in your investment account.
    b. Explain what each value in the function model represents.
    c. In how many years will the total reach $3600? Show your work.

Other

48. Describe the vertical-line test for a graph and tell how it can determine whether a graph represents a function.

49. What are multiple zeros? Explain how you can tell if a function has multiple zeros.

50. Use division to prove that $x = 3$ is a real zero of $y = -x^3 + 9x^2 - 38x + 60$.

51. In a particular region of a national park, there are currently 330 deer, and the population is increasing at an annual rate of 11%.
    a. Write an exponential function to model the deer population.
    b. Explain what each value in the model represents.
    c. Predict the number of deer that will be in the region after five years. Show your work.

Name_____ Period _____

This review counts as a quiz grade. You must show work to receive credit. Due at the BEGINNING of your final.

PreCalc Final Exam Review
Answer Section

MULTIPLE CHOICE

1. ANS: A PTS: 1 DIF: L4 REF: 6-3 Dividing Polynomials
   OBJ: 6-3.1 Using Long Division TOP: 6-3 Example 2
   KEY: division of polynomials | polynomial | factoring a polynomial
2. ANS: C PTS: 1
3. ANS: C PTS: 1
4. ANS: C PTS: 1
5. ANS: C PTS: 1
6. ANS: D PTS: 1
7. ANS: A PTS: 1
8. ANS: D PTS: 1
9. ANS: C PTS: 1

SHORT ANSWER

10. ANS:
    $2\frac{4}{7}$

    PTS: 1 DIF: L3 REF: 2-1 Relations and Functions
    OBJ: 2-1.2 Identifying Functions TOP: 2-1 Example 6
    KEY: function notation
11. ANS:
    0, 3, 2

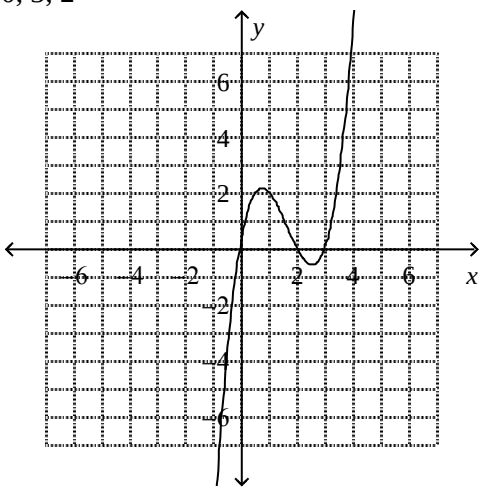

    PTS: 1 DIF: L2 REF: 6-2 Polynomials and Linear Factors
    OBJ: 6-2.2 Factors and Zeros of a Polynomial Function STA: TX TEKS 2A.1A
    TOP: 6-2 Example 4

Name_____ Period _____

This review counts as a quiz grade. You must show work to receive credit. Due at the BEGINNING of your final.

KEY: Zero Product Property | polynomial function | zeros of a polynomial function | graphing

12. ANS:
$f(x) = x^3 - 2x^2 - 19x + 20$

PTS: 1 DIF: L2 REF: 6-2 Polynomials and Linear Factors
OBJ: 6-2.2 Factors and Zeros of a Polynomial Function STA: TX TEKS 2A.1A
TOP: 6-2 Example 5
KEY: polynomial function | standard form of a polynomial | zeros of a polynomial function

13. ANS:
$3x^2 - 12x + 32$, R –93

PTS: 1 DIF: L2 REF: 6-3 Dividing Polynomials
OBJ: 6-3.1 Using Long Division TOP: 6-3 Example 1
KEY: polynomial | division of polynomials

14. ANS:
no solution

PTS: 1 DIF: L4 REF: 6-4 Solving Polynomial Equations
OBJ: 6-4.1 Solving Equations by Graphing STA: TX TEKS 2A.2A
TOP: 6-4 Example 1
KEY: graphing | graphing calculator | solving equations | no solutions | polynomial function

15. ANS:
$d^7 + 21d^6 + 189d^5 + 945d^4 + 2835d^3 + 5103d^2 + 5103d + 2187$

PTS: 1 DIF: L2 REF: 6-8 The Binomial Theorem
OBJ: 6-8.1 Binomial Expansion and Pascal's Triangle TOP: 6-8 Example 1
KEY: Pascal's Triangle | binomial expansion

16. ANS:
$d^3 - 9d^2b + 27db^2 - 27b^3$

PTS: 1 DIF: L2 REF: 6-8 The Binomial Theorem
OBJ: 6-8.2 The Binomial Theorem TOP: 6-8 Example 3
KEY: Pascal's Triangle | binomial expansion

17. ANS:
$\log_6 1,296 = 4$

PTS: 1 DIF: L3 REF: 8-3 Logarithmic Functions as Inverses
OBJ: 8-3.1 Writing and Evaluating Logarithmic Expressions
STA: TX TEKS 2A.4A | TX TEKS 2A.4B | TX TEKS 2A.4C | TX TEKS 2A.11A | TX TEKS 2A.11B
TOP: 8-3 Example 2 KEY: logarithm | logarithmic form

18. ANS:
–4

PTS: 1 DIF: L4 REF: 8-3 Logarithmic Functions as Inverses
OBJ: 8-3.1 Writing and Evaluating Logarithmic Expressions
STA: TX TEKS 2A.4A | TX TEKS 2A.4B | TX TEKS 2A.4C | TX TEKS 2A.11A | TX TEKS 2A.11B
TOP: 8-3 Example 3 KEY: evaluating logarithms

19. ANS:
2.2

Name_____ Period _____

This review counts as a quiz grade. You must show work to receive credit. Due at the BEGINNING of your final.

PTS: 1 DIF: L4 REF: 8-3 Logarithmic Functions as Inverses
OBJ: 8-3.1 Writing and Evaluating Logarithmic Expressions
STA: TX TEKS 2A.4A | TX TEKS 2A.4B | TX TEKS 2A.4C | TX TEKS 2A.11A | TX TEKS 2A.11B
TOP: 8-3 Example 4 KEY: logarithm | problem solving

20. ANS:

$32^{\frac{3}{5}} = 8$

PTS: 1 DIF: L4 REF: 8-3 Logarithmic Functions as Inverses
OBJ: 8-3.1 Writing and Evaluating Logarithmic Expressions
STA: TX TEKS 2A.4A | TX TEKS 2A.4B | TX TEKS 2A.4C | TX TEKS 2A.11A | TX TEKS 2A.11B
TOP: 8-3 Example 3 KEY: logarithmic form | logarithm | exponential form

21. ANS:

$\log_b(q^5y^2)$

PTS: 1 DIF: L4 REF: 8-4 Properties of Logarithms
OBJ: 8-4.1 Using the Properties of Logarithms STA: TX TEKS 2A.2A
TOP: 8-4 Example 2
KEY: properties of logarithms | logarithm | Product Property of Logarithms | Power Property of Logarithms

22. ANS:

$\log_3 2$

PTS: 1 DIF: L3 REF: 8-4 Properties of Logarithms
OBJ: 8-4.1 Using the Properties of Logarithms STA: TX TEKS 2A.2A
TOP: 8-4 Example 2
KEY: properties of logarithms | simplifying a logarithm | Quotient Property of Logarithms

23. ANS:

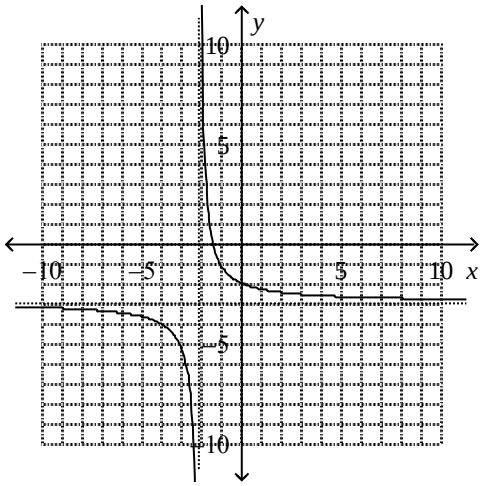

PTS: 1 DIF: L2 REF: 9-2 The Reciprocal Function Family
OBJ: 9-2.2 Graphing Translations of Reciprocal Functions
STA: TX TEKS 2A.4A | TX TEKS 2A.4B | TX TEKS 2A.10A | TX TEKS 2A.10G
TOP: 9-2 Example 4 KEY: graphing | asymptote

24. ANS:

Name_____ Period _____

This review counts as a quiz grade. You must show work to receive credit. Due at the BEGINNING of your final.

$$y = \frac{4}{x - 7} + 6$$

PTS: 1 DIF: L2 REF: 9-2 The Reciprocal Function Family
OBJ: 9-2.2 Graphing Translations of Reciprocal Functions
STA: TX TEKS 2A.4A | TX TEKS 2A.4B | TX TEKS 2A.10A | TX TEKS 2A.10G
TOP: 9-2 Example 5 KEY: asymptote | translation

25. ANS:
$x = -9$, $x = -7$

PTS: 1 DIF: L2 REF: 9-3 Rational Functions and Their Graphs
OBJ: 9-3.1 Properties of Rational Functions
STA: TX TEKS 2A.10A | TX TEKS 2A.10B | TX TEKS 2A.10C
TOP: 9-3 Example 1 KEY: rational function | point of discontinuity

26. ANS:
asymptote: $x = -4$ and hole: $x = 2$

PTS: 1 DIF: L2 REF: 9-3 Rational Functions and Their Graphs
OBJ: 9-3.1 Properties of Rational Functions
STA: TX TEKS 2A.10A | TX TEKS 2A.10B | TX TEKS 2A.10C
TOP: 9-3 Example 2
KEY: asymptote | vertical asympotote | rational function | graphing | hole in the graph of a function

27. ANS:
$$x = -\frac{1}{8}y^2$$

PTS: 1 DIF: L2 REF: 10-2 Parabolas
OBJ: 10-2.1 Writing the Equation of a Parabola
STA: TX TEKS 2A.5B | TX TEKS 2A.5C | TX TEKS 2A.5D | TX TEKS 2A.5E
TOP: 10-2 Example 2
KEY: equation of a parabola | focus of a parabola | parabola | vertex of a parabola

28. ANS:
vertex (2, 5), focus (2, 7), directrix at $y = 3$

PTS: 1 DIF: L2 REF: 10-2 Parabolas
OBJ: 10-2.2 Graphing Parabolas
STA: TX TEKS 2A.5B | TX TEKS 2A.5C | TX TEKS 2A.5D | TX TEKS 2A.5E
TOP: 10-2 Example 5
KEY: directrix | equation of a parabola | focus of a parabola | parabola | graphing | vertex of a parabola

29. ANS:
$$(x + 1)^2 + (y + 3)^2 = 4$$

PTS: 1 DIF: L2 REF: 10-3 Circles OBJ: 10-3.1 Writing the Equation of a Circle
STA: TX TEKS 2A.5B | TX TEKS 2A.5D TOP: 10-3 Example 3
KEY: circle | equation of a circle | graphing | center of a circle | radius

30. ANS:

Name_____ Period _____

This review counts as a quiz grade. You must show work to receive credit. Due at the BEGINNING of your final.

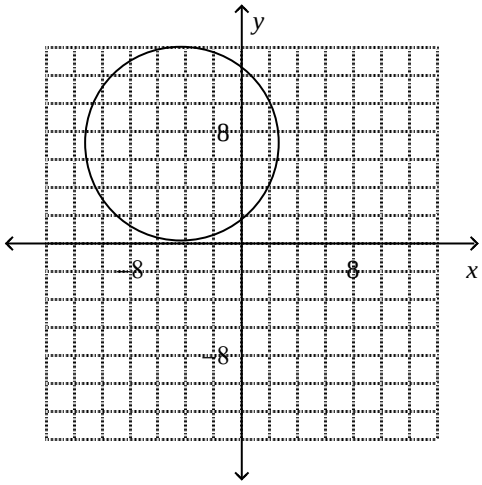

PTS: 1 DIF: L2 REF: 10-3 Circles
OBJ: 10-3.2 Using the Center and Radius of a Circle STA: TX TEKS 2A.5B | TX TEKS 2A.5D
TOP: 10-3 Example 5
KEY: center of a circle | circle | equation of a circle | radius | translation

31. ANS:

foci $(\pm 3\sqrt{2}, 0)$

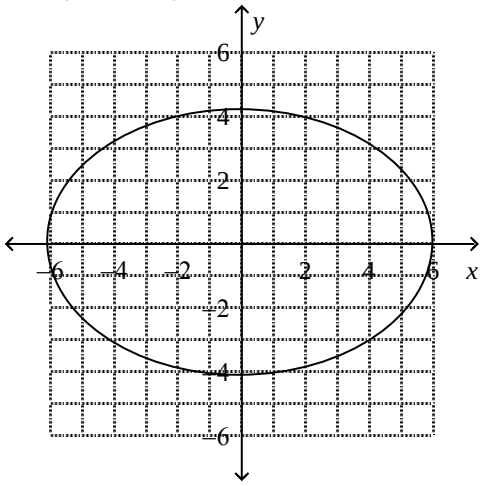

PTS: 1 DIF: L2 REF: 10-4 Ellipses
OBJ: 10-4.2 Finding and Using the Foci of an Ellipse STA: TX TEKS 2A.5B | TX TEKS 2A.5D
TOP: 10-4 Example 3
KEY: ellipse | equation of an ellipse | foci of an ellipse | major axis of an ellipse | minor axis of an ellipse

32. ANS:

$$\frac{(x-3)^2}{9} + \frac{(y+3)^2}{36} = 1$$

PTS: 1 DIF: L2 REF: 10-6 Translating Conic Sections
OBJ: 10-6.1 Writing Equations of Translated Conic Sections
STA: TX TEKS 2A.5B | TX TEKS 2A.5D | TX TEKS 2A.5E TOP: 10-6 Example 1
KEY: conic sections | co-vertex of an ellipse | equation of an ellipse | major axis of an ellipse | minor axis of an

Name_____ Period _____

This review counts as a quiz grade. You must show work to receive credit. Due at the BEGINNING of your final.

ellipse | translation | vertex of an ellipse

33. ANS:

$$\frac{(x-3)^2}{64} + \frac{(y-4)^2}{25} = 1$$

PTS: 1 DIF: L3 REF: 10-6 Translating Conic Sections
OBJ: 10-6.1 Writing Equations of Translated Conic Sections
STA: TX TEKS 2A.5B | TX TEKS 2A.5D | TX TEKS 2A.5E TOP: 10-6 Example 1
KEY: conic sections | co-vertex of an ellipse | ellipse | equation of an ellipse | major axis of an ellipse | minor axis of an ellipse | translation | vertex of an ellipse

34. ANS:

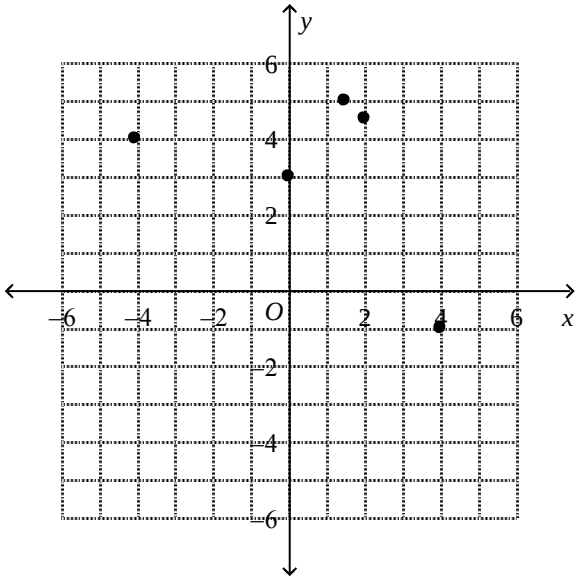

PTS: 1 DIF: L2 REF: 2-1 Relations and Functions
OBJ: 2-1.1 Graphing Relations TOP: 2-1 Example 1
KEY: relation | graphing | ordered pair

35. ANS:
No; a domain value corresponds to two or more range values.

PTS: 1 DIF: L2 REF: 2-1 Relations and Functions
OBJ: 2-1.1 Graphing Relations TOP: 2-1 Example 4
KEY: relation | domain | range

36. ANS:

Name_____ Period _____

This review counts as a quiz grade. You must show work to receive credit. Due at the BEGINNING of your final.

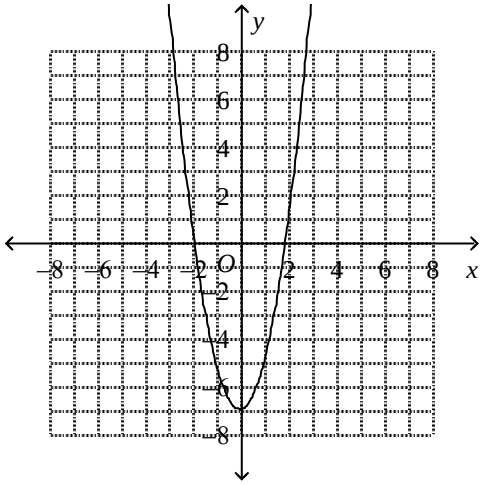

PTS: 1 DIF: L2 REF: 5-2 Properties of Parabolas
OBJ: 5-2.1 Graphing Parabolas
STA: TX TEKS 2A.1A | TX TEKS 2A.5C | TX TEKS 2A.6B | TX TEKS 2A.8A
TOP: 5-2 Example 1 KEY: quadratic function | graphing

37. ANS:

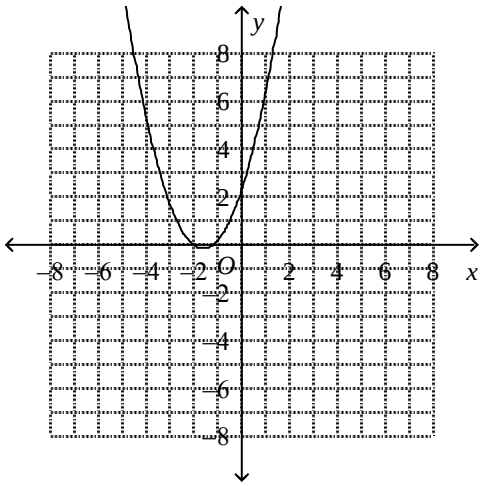

vertex: $\left(-\frac{3}{2}, -\frac{1}{4}\right)$, axis of symmetry: $x = -\frac{3}{2}$

PTS: 1 DIF: L2 REF: 5-2 Properties of Parabolas
OBJ: 5-2.1 Graphing Parabolas
STA: TX TEKS 2A.1A | TX TEKS 2A.5C | TX TEKS 2A.6B | TX TEKS 2A.8A
TOP: 5-2 Example 2 KEY: quadratic function | vertex of a parabola | axis of symmetry

38. ANS:

Name_____ Period _____

This review counts as a quiz grade. You must show work to receive credit. Due at the BEGINNING of your final.

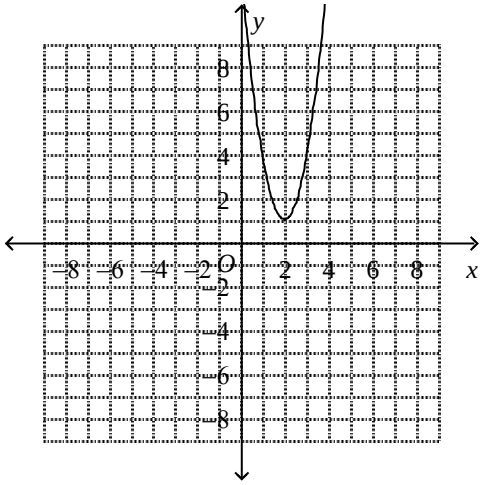

minimum: 1

PTS: 1 DIF: L2 REF: 5-2 Properties of Parabolas
OBJ: 5-2.2 Finding Maximum and Minimum Values
STA: TX TEKS 2A.1A | TX TEKS 2A.5C | TX TEKS 2A.6B | TX TEKS 2A.8A
TOP: 5-2 Example 3 KEY: quadratic function | minimum value

39. ANS:

a. $y = (x - 5)^2 - 2$

b. $y = (x - 1)^2 + 12$

c. left 4 units, up 14 units

PTS: 1 DIF: L3 REF: 5-3 Translating Parabolas
OBJ: 5-3.1 Using Vertex Form
STA: TX TEKS 2A.4A | TX TEKS 2A.4B | TX TEKS 2A.6C | TX TEKS 2A.7A | TX TEKS 2A.7B | TX TEKS 2A.8A TOP: 5-3 Example 2
KEY: parabola | translation | vertex form | problem solving | word problem | multi-part question

40. ANS:

$x^2 - 9$; $(x - 3)(x + 3)$

PTS: 1 DIF: L2 REF: 5-4 Factoring Quadratic Expressions
OBJ: 5-4.2 Factoring Special Expressions
STA: TX TEKS 2A.2A | TX TEKS 2A.8A | TX TEKS 2A.8D TOP: 5-4 Example 8
KEY: difference of two squares | factoring a difference of two squares

41. ANS:

exponential growth

PTS: 1 DIF: L3 REF: 8-1 Exploring Exponential Models
OBJ: 8-1.2 Exponential Decay
STA: TX TEKS 2A.4A | TX TEKS 2A.11F | TX TEKS 2A.1B | TX TEKS 2A.11B
TOP: 8-1 Example 4 KEY: exponential function | exponential growth | reasoning

42. ANS:

exponential decay

PTS: 1 DIF: L3 REF: 8-1 Exploring Exponential Models

Name_____ Period _____

This review counts as a quiz grade. You must show work to receive credit. Due at the BEGINNING of your final.

OBJ: 8-1.2 Exponential Decay
STA: TX TEKS 2A.4A | TX TEKS 2A.11F | TX TEKS 2A.1B | TX TEKS 2A.11B
TOP: 8-1 Example 4 KEY: exponential decay | exponential function | reasoning

43. ANS:
a. Divide the previous term by –2.
b. $-\frac{1}{2}, \frac{1}{4}, -\frac{1}{8}$

PTS: 1 DIF: L2 REF: 11-1 Mathematical Patterns
OBJ: 11-1.1 Identifying Mathematical Patterns TOP: 11-1 Example 1
KEY: sequence | pattern | multi-part question

44. ANS:
-3, 4, 11, 18...

PTS: 1

45. ANS:
a) 24
b) 37
c) 20
d) 25
e) 32
f) 56

PTS: 1

46. ANS:
a)2,23,30
b)20,14,-4
c)17,27,32
d)10,17,31
e)8,0,-4
f)6,-3,-12

PTS: 1

ESSAY

47. ANS:
[4] **a.** $y = 580e^{0.1t}$
b. In the model, the coefficient of *e* is 580, the original investment. The formula for continuously compounded interest uses the number *e* raised to the power *rt*, where *r* is the rate as a decimal, in this case 0.1, and *t* is the time in years.
c. To find the number of years to reach $3600, substitute 3600 into the model.

$$\begin{aligned} y &= 580e^{0.1t} \\ 3600 &= 580e^{0.1t} \\ 6.2 &= e^{0.1t} \\ \ln 6.2 &= 0.1t \\ t &= \frac{\ln 6.2}{0.1} \end{aligned}$$

Name_____ Period _____

This review counts as a quiz grade. You must show work to receive credit. Due at the BEGINNING of your final.

Dividing and rounding to the nearest year, $t \approx 18$. The investment will reach $3600 in about 18 years.
[3] one error in computation or incomplete explanation
[2] two errors in computation or no explanation
[1] one correct answer with no explanation

PTS: 1 DIF: L4 REF: 8-6 Natural Logarithms
OBJ: 8-6.2 Natural Logarithmic and Exponential Equations
STA: TX TEKS 2A.2A | TX TEKS 2A.11C | TX TEKS 2A.11D
KEY: compounding continuously | exponential function | exponential growth | extended response | graphing | interest rates | percent | problem solving | the number e | writing in math | rubric-based question

OTHER

48. ANS:
Answers may vary. Sample: Imagine drawing a vertical line through every point on the graph. If no line intersects the graph more than once, the graph is a function. It works because if a vertical line intersects the graph twice, then two points have the same *x*-value but two different *y*-values.

PTS: 1 DIF: L3 REF: 2-1 Relations and Functions
OBJ: 2-1.2 Identifying Functions TOP: 2-1 Example 5
KEY: vertical-line test | graphing | writing in math | reasoning

49. ANS:
If a linear factor of a polynomial is repeated, then the zero is repeated and the function has multiple zeros. To determine whether a function has a multiple zero, factor the polynomial. If a factor is repeated in the factored expression, then it is a multiple zero.

PTS: 1 DIF: L3 REF: 6-2 Polynomials and Linear Factors
OBJ: 6-2.2 Factors and Zeros of a Polynomial Function STA: TX TEKS 2A.1A
TOP: 6-2 Example 6
KEY: reasoning | factoring a polynomial | multiple zero | polynomial function | zeros of a polynomial function | writing in math

50. ANS:
$-x^3 + 9x^2 - 38x + 60 \div (x - 3) = -x^2 + 6x - 20$ with no remainder, so $x = 3$ is a real zero of the function.

PTS: 1 DIF: L3 REF: 6-3 Dividing Polynomials
OBJ: 6-3.2 Using Synthetic Division TOP: 6-3 Example 5
KEY: division of polynomials | polynomial | polynomial function | root of a function | writing in math

51. ANS:
a. $y = 330(1.11)^x$
b. In the model, 330 represents the initial population of deer. The growth factor is represented by 1 + 0.11 or 1.11.
c. To predict the number of deer present after 5 years, substitute 5 into the function and evaluate.

$y = 330(1.11)^x$	function model
$y = 330(1.11)^5$	Substitute 5 for *x*.
$y \approx 556$	Use a calculator.

There will be about 556 deer in the region.

PTS: 1 DIF: L4 REF: 8-1 Exploring Exponential Models
OBJ: 8-1.2 Exponential Decay

Name_____ Period _____

This review counts as a quiz grade. You must show work to receive credit. Due at the BEGINNING of your final.

STA: TX TEKS 2A.4A | TX TEKS 2A.11F | TX TEKS 2A.1B | TX TEKS 2A.11B
TOP: 8-1 Example 2
KEY: exponential decay | exponential function | multi-part question | percent | problem solving | writing in math