ABB MEASUREMENT & ANALYTICS | OPERATING INSTRUCTION

ProcessMaster wafer FEM610

Electromagnetic flowmeter

The wafer flowmeter that delivers the power to solve your most demanding process applications.

Measurement made easy

—

FEM610
FET610

Introduction

Electromagnetic flowmeter can measure the volume flowrate and the mass flowrate (based on a fixed density to be programmed).

Additional Information

Additional documentation on ProcessMaster FEM610 is available for download free of charge at www.abb.com/flow.

Contents

1 Safety

General information and instructions

These instructions are an important part of the product and must be retained for future reference.

Installation, commissioning, and maintenance of the product may only be performed by trained specialist personnel who have been authorized by the plant operator accordingly. The specialist personnel must have read and understood the manual and must comply with its instructions.
For additional information or if specific problems occur that are not discussed in these instructions, contact the manufacturer.
The content of these instructions is neither part of nor an amendment to any previous or existing agreement, promise or legal relationship.
Modifications and repairs to the product may only be performed if expressly permitted by these instructions.
Information and symbols on the product must be observed. These may not be removed and must be fully legible at all times.

The operating company must strictly observe the applicable national regulations relating to the installation, function testing, repair and maintenance of electrical products.

Warnings

The warnings in these instructions are structured as follows:

⚠ DANGER

The signal word '**DANGER**' indicates an imminent danger. Failure to observe this information will result in death or severe injury.

⚠ WARNING

The signal word '**WARNING**' indicates an imminent danger. Failure to observe this information may result in death or severe injury.

⚠ CAUTION

The signal word '**CAUTION**' indicates an imminent danger. Failure to observe this information may result in minor or moderate injury.

Note
The signal word **"Note"** indicates useful or important information about the product.

The signal word **"Note"** is not a signal word indicating a danger to personnel. The signal word "NOTE" can also refer to material damage.

Intended use

This device is intended for the following uses:

- To transmit fluid, pulpy or pasty measurement media with electrical conductivity.
- For volume flow measurement (under operating conditions).
- For mass flow measurement (based on a fixed density to be programmed).

The device has been designed for use exclusively within the technical limit values indicated on the identification plate and in the data sheets.

In terms of the measuring medium, observe following points:

- Wetted parts such as measuring electrodes, liner, grounding electrodes, grounding rings, protection flanges must not be damaged because of the chemical and physical characteristic of the measuring medium.
- Media with unknown properties or abrasive measuring media may only be used if regular and suitable tests can be performed to ensure the safe condition of the device.
- The information on the name plate must be observed.
- Prior to using corrosive and abrasive measurement media, the operator must check the level of resistance of all parts coming into contact with the measuring medium. ABB will gladly support you in selecting the materials, but cannot accept any liability in doing so.

Improper use

The following are considered to be instances of improper use of the device:

- For operating as a flexible adapter in piping, e.g. for compensating pipe offsets, pipe vibrations, pipe expansions, etc.
- For use as a climbing aid, e.g. for mounting purposes
- For use as a support for external loads, e.g. as a support for piping, etc.
- Material application, e.g. by painting over the name plate or welding/soldering on parts
- Material removal, e.g. by spot drilling the housing

Warranty provisions

Using the device in a manner that does not fall within the scope of its intended use, disregarding this manual, using underqualified personnel, or making unauthorized alterations releases the manufacturer from liability for any resulting damage. This renders the manufacturer's warranty null and void.

Manufacturer's address

ABB Inc.
Measurement & Analytics
125 E. County Line Road
Warminster, PA 18974
USA
Tel: +1 215 674 6000
Fax: +1 215 674 7183

2 Design and function

Overview

ProcessMaster

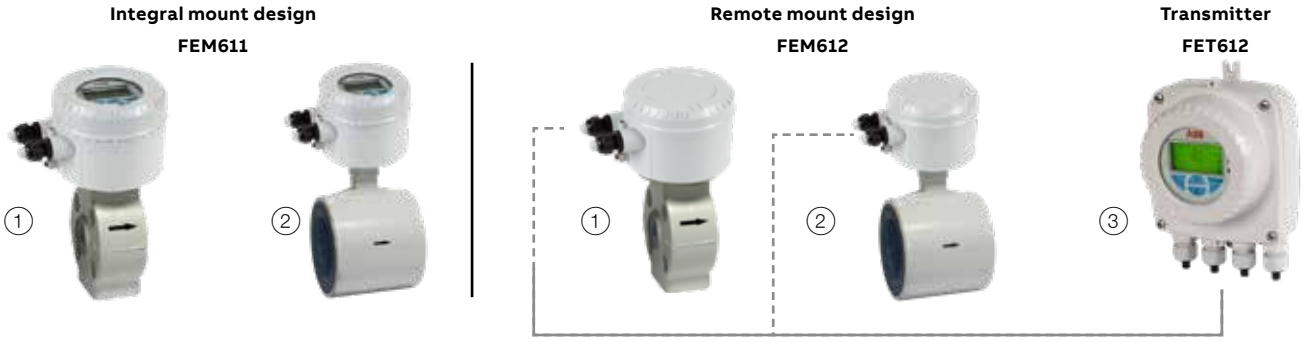

(1) Flowmeter sensor 1/10" ...3/8" (DN3 ... DN10) (2) Flowmeter sensor ½"...4" (DN15...DN100) (3) Remote transmitter

Figure 1 Designs

Flowmeter sensor	
Model	ProcessMaster FEM611, FEM612
Housing	Integral mount design, remote mount design
Measuring accuracy for liquids	0.5 % of measured value
Permissible measuring medium temperature T_{medium}	−13 to 266 °F (−25 to 130 °C)
Minimum conductivity	> 20 µS/cm
Nominal pressure rating	ASME CL 150, CL 300
Nominal diameter	1/10“ ... 4“ (DN3 ... DN100)
Process connection	Wafer style connection
Liner material	ETFE
Electrode material	Hastelloy C®, Platinum-Iridium, Tantalum
IP rating	IP 65 / IP 67 / Type 4X for remote sensor assembly

Approvals for sensor	
CRN (Canadian Reg.Number)	Pending
Further approvals	At www.abb.com/flow or on request.

Transmitter	
Model	FET612
Housing	Integral mount design (see Fig. 1), remote mount design.
IP rating	IP 65 / IP 67 / Type 4X
Cable length	Maximum 164 ft (50 m), remote mount design only
Power supply	100 ... 240 V AC (-15 / +10 %), 24 ... 48 V DC (-10% / +10 %)
Outputs	Current output: 4 … 20 mA, active Digital output 1: passive, configurable as pulse, frequency or switch output Digital output 2: passive, configurable as pulse or switch output
Local display	Configurable graphical display (option)

Approvals for transmitter	
Further approvals	At www.abb.com/flow or on request.

2 ...Design and function

Model variants

Integral mount design
For devices with an integral mount design, the transmitter and the flowmeter sensor form a single mechanical unit.

Remote mount design
For devices with a remote mount design, the transmitter and flowmeter sensor are mounted in separate locations.
The electrical connection between the transmitter and the flowmeter sensor is provided by a signal cable.
When the minimum conductivity of the measuring medium is 20 µS/cm, a maximum signal cable length of 164 ft (50 m) is possible.

Measuring principle

Measurements performed by the electromagnetic flowmeter are based on Faraday's law of induction. A voltage is generated in a conductor when it moves through a magnetic field.

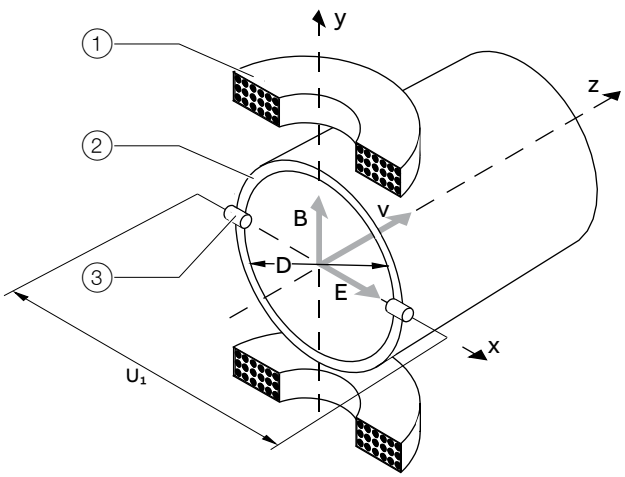

(1) Magnet coil
(2) Measuring tube in electrode plane
(3) Signal electrode

Figure 2 Electromagnetic flowmeter diagram

$U_1 \sim B \times D \times v$	$q_v = \frac{D^2 \times \pi}{4} \times v$	$U_1 \sim q_v$
U_1 Signal voltage	v Average flow velocity	
B Magnetic induction	q_v Volume flow	
D Electrode spacing		

This principle is applied to a conductive fluid in the measuring tube through which a magnetic field is generated perpendicular to the flow direction (see Fig. 2).
The voltage induced in the fluid is measured by two electrodes located diametrically opposite each other. This signal voltage is proportional to the magnetic induction, the electrode spacing and the average flow velocity.
Considering that the magnetic induction and the electrode spacing are constant values, a proportionality exists between the signal voltage UE and the average flow velocity.
From the equation for calculating the volume flowrate, it follows that the signal voltage is linearly proportional to the volume flowrate.
The induced voltage is converted by the transmitter to standardized, analog and digital signals.

3 Product identification

Name plate

Integral mount design

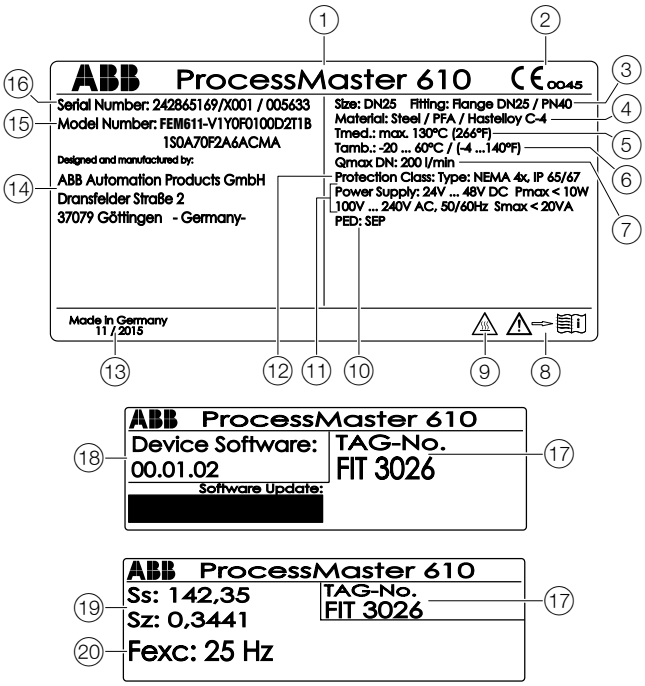

Figure 3 Name plate integral mount design (example)

1. Type designation
2. CE mark (pending)
3. Nominal diameter / Process connection / pressure rating
4. Flange material
5. Medium temperature range
6. Ambient temperature range
7. Calibration value Q_{max}DN
8. "Follow operating instructions" symbol
9. "Hot surface" symbol
10. PED marking
11. Power supply
12. IP rating
13. Year of manufacture (month / year)
14. Manufacturer
15. Order code
16. Serial number
17. TAG number
18. Device Firmware version
19. Sensor calibration data
20. Excitation frequency

Remote mount design

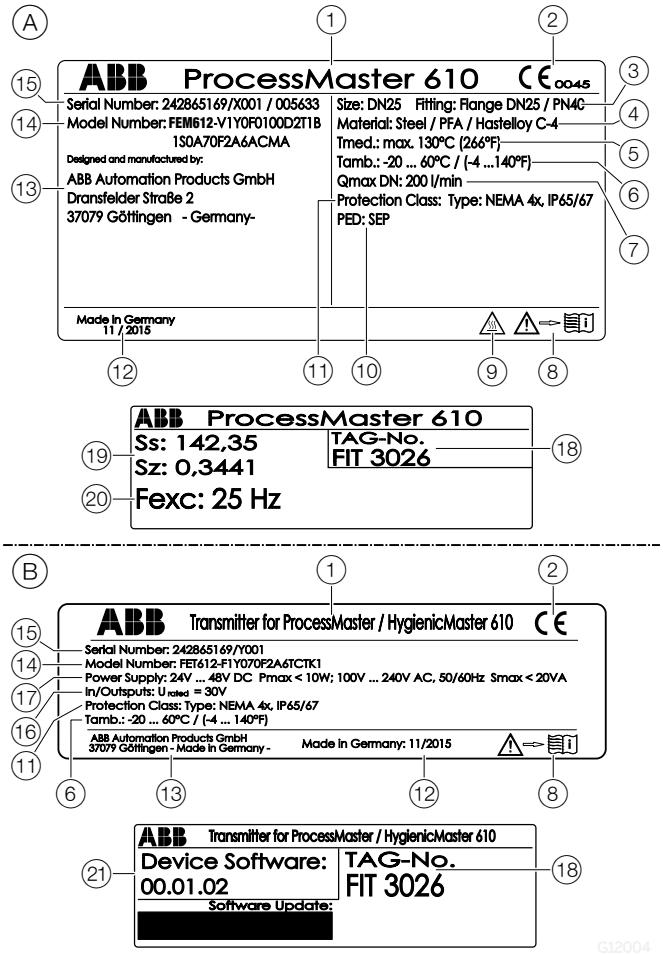

Figure 4 Name plate remote mount design (example)

A. Flowmeter sensor
B. Transmitter
1. Type designation
2. CE mark (pending)
3. Nominal diameter / Process connection / pressure rating
4. Meter tube material
5. Medium temperature range
6. Ambient temperature range
7. Calibration value Q_{max}DN
8. "Follow operating instructions" symbol
9. "Hot surface" symbol
10. PED marking
11. IP rating
12. Year of manufacture (month / year)
13. Manufacturer
14. Order code
15. Serial number
16. Power supply
17. Maximum voltage at inputs and outputs
18. TAG number
19. Sensor calibration data
20. Excitation frequency
21. Device Firmware version

4 Transport and storage

Inspection

Check the devices immediately after unpacking for possible damage that may have occurred from improper transport. Details of any damage that has occurred in transit must be recorded on the transport documents.

All claims for damages must be submitted to the shipper without delay and before installation.

Transport

DANGER

Life-threatening danger due to suspended loads.

In the case of suspended loads, a danger of the load falling exists.

- Remaining under suspended loads is prohibited.

WARNING

Risk of injury due to device slipping.

The device's center of gravity may be higher than the harness suspension points.

- Make sure that the device does not slip or turn during transport.
- Support the device laterally during transport.

Note

Potential damage to device.
The protection plates or protective caps installed on the process connections of devices lined with PTFE / PFA must not be removed until just before installation.
To prevent possible leakage, make sure that the liner on the flange is not cut or damaged

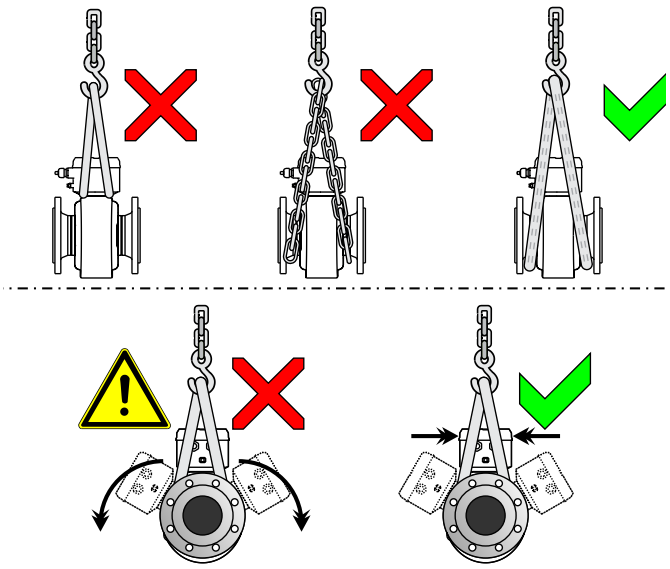

Figure 5 Transport instructions - ≤ 18“ (DN 450)

Flange devices ≤ 18“ (DN 450)

- Carrying straps must be used to transport flange designs smaller than 18“ (DN 450)
- Wrap the straps around both process connections when lifting the device
- Chains should not be used, since these may damage the housing.

Storing the device

Bear the following points in mind when storing devices:

- Store the device in its original packaging in a dry and dust-free location.
- Observe the permitted ambient conditions for transport and storage.
- Avoid storing the device in direct sunlight.
- In principle, the devices may be stored for an unlimited period. However, the warranty conditions stipulated in the order confirmation of the supplier apply.

Storage temperature range
-22 ... 158 °F (-30 ... 70 °C)

The ambient conditions for the transport and storage of the device correspond to the ambient conditions for operation of the device.

Adhere to the device data sheet.

Returning devices

For the return of devices, follow the instructions in the chapter "Returning devices" on page 74.

5 Installation

Installation conditions

General information

The following points must be observed during installation:

- The flow direction must correspond to the marking, if present.
- The maximum torque for all flange screws must be complied with.
- Secure the flange bolts and nuts against pipe vibration.
- The devices must be installed without mechanical tension (torsion, bending).
- Install flange devices / wafer-type devices with plane parallel counterflanges and use appropriate gaskets only.
- The piping may not exert any inadmissible forces or torques on the device.
- Make sure temperature limits are not exceeded operating the device.
- Vacuum shocks in the piping should be avoided to prevent damage to the liners. Vacuum shocks can destroy the device.
- Do not remove the sealing plugs in the cable glands until you are ready to install the electrical cable.
- The transmitter with a remote mount design must be installed at a largely vibration-free location.
- Do not expose the transmitter and sensor to direct sunlight. Provide appropriate sun protection as necessary.
- When installing the transmitter in a control cabinet, make sure adequate cooling is provided.
- In case of a remote mounted transmitter make sure that the sensor and the transmitter have been assigned correctly. Compatible devices have the same end numbers on the name plate, e.g. flowmeter sensor X001 belongs to transmitter Y001 or flowmeter sensor X002 belongs to transmitter Y002.

Devices with an ETFE liner

- In principle, devices with an ETFE liner do not require additional gaskets.

5 ...Installation

...Installation conditions

Devices with a wafer-type design

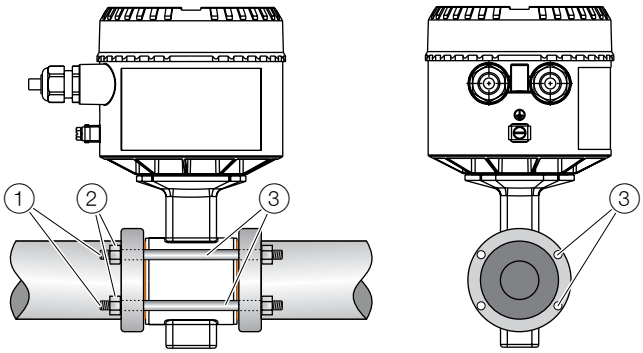

1 Threaded rod
2 Nut with washer
3 Centering sleeves

Figure 6 Installation set for wafer-type installation (example)

For devices with a wafer-type design, ABB offers an installation set as an accessory that comprises threaded rods, nuts, washers and centering sleeves for installation.

Flow direction

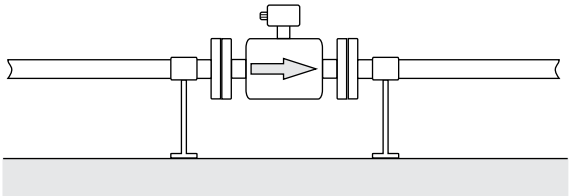

Figure 7 Flow direction

The device measures the flowrate in both directions. Forward flow is the factory setting, as shown in Fig. 7.

Electrode axis

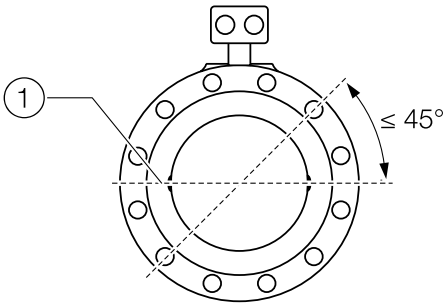

1 Electrode axis

Figure 8 Orientation of the electrode axis

The electrode axis should be horizontal if at all possible or no more than 45° from horizontal.

Mounting position

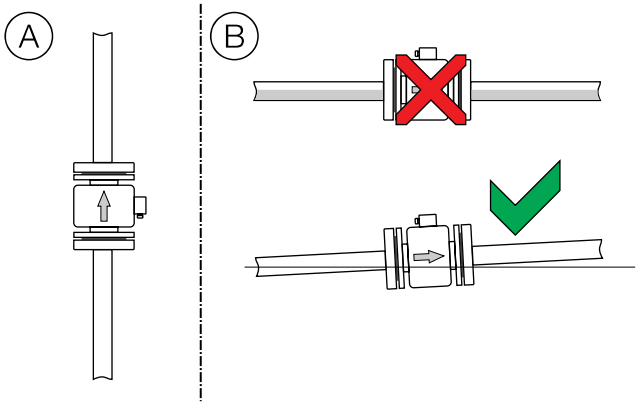

Figure 9 Mounting position

A Vertical installation for measuring abrasive fluids, preferably with flow in upward direction.

B In case of horizontal installation, the Meter tube must always be completely full.
Provide for a slight incline of the connection for degassing.

Note
Prefer vertical installation in hygienic applications.
With horizontal installation assure the sensor is self-drainable.

5 ...Installation

...Installation conditions

Minimum distance

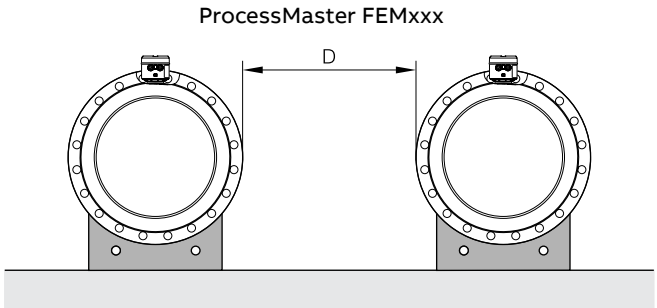

Distance D: ≥ 3.3 ft (1.0 m)

Figure 10 Minimum distance

Inlet and outlet sections

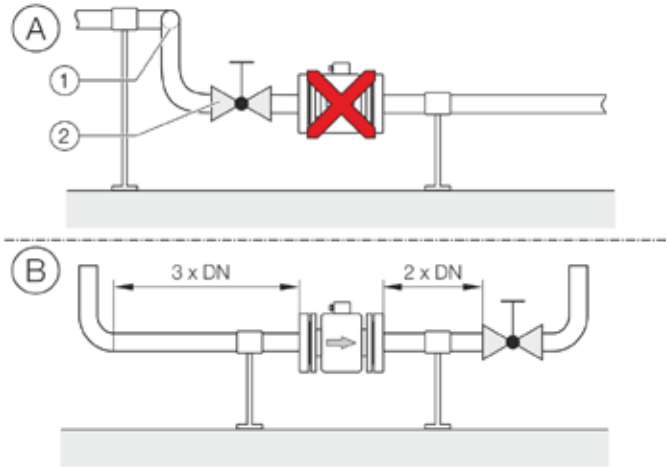

(1) Double elbow

(2) Turn-off component

Figure 11 In- and outlet section, turn-off component

The metering principle is independent of the flow profile as long as standing eddies do not extend into the metering section, such as may occur after double elbows, in the event of tangential inflow, or where half-open gate valves are located upstream of the flowmeter sensor.
In such cases, measures must be put in place to normalize the flow profile.

(A) Do not install fittings, manifolds, valves, etc., directly in front of the flowmeter sensor.

(B) Inlet and outlet section: Length of straight inlet and outlet section of the flowmeter sensor.
Experience has shown that, in most installations, inlet sections 3 x DN long and outlet sections 2 x DN long are sufficient (DN = nominal diameter of the flowmeter sensor).
For test stands, the reference conditions of 10 x DN inlet section and 5 x DN outlet section must be provided, in accordance with EN 29104 / ISO 9104.
Valves or other turn-off components should be installed in the outlet section.
Butterfly valves must be installed so that the valve plate does not extend into the flowmeter sensor.

5 ...Installation

...Installation conditions

Free inlet or outlet

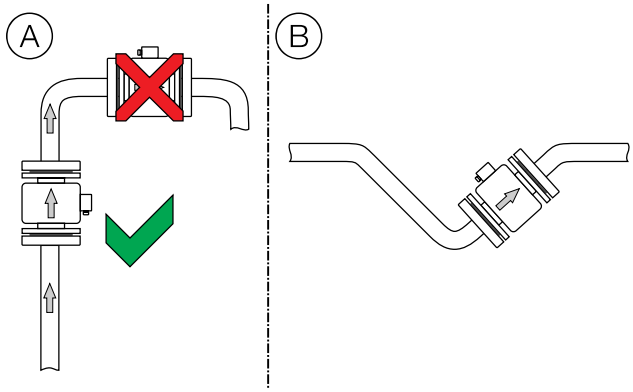

Figure 12 Free inlet or outlet

(A) Do not install the flowmeter at the highest point or in the draining off side of the pipeline, flowmeter runs empty, air bubbles can form.

(B) Provide for a siphon fluid intake for free inlets or outlets so that the pipeline is always full.

Strongly contaminated measuring media

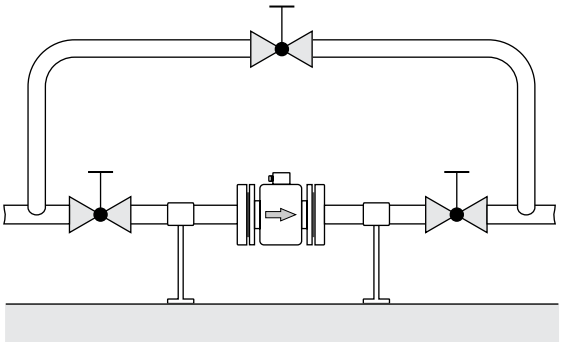

Figure 13 Bypass connection

For strongly contaminated measuring media, a bypass connection according to the figure is recommended so that operation of the system can continue to run without interruption during the mechanical cleaning.

Installation in the vicinity of pumps

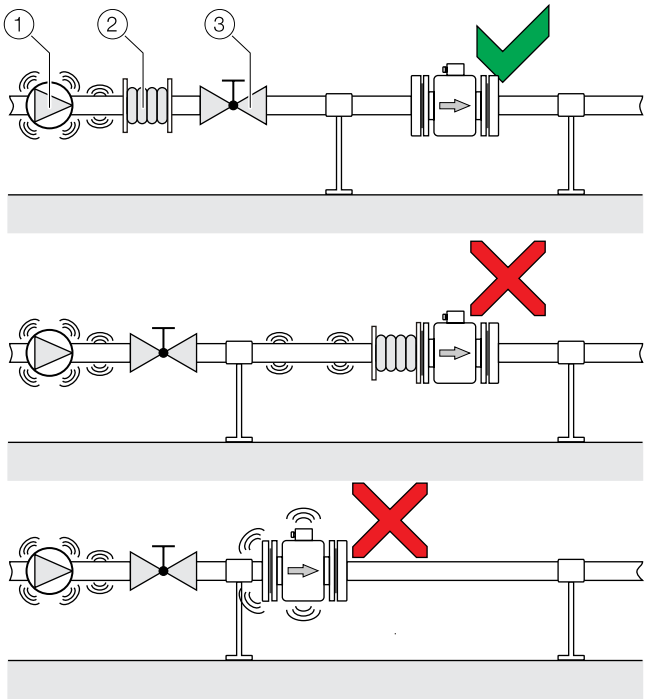

Figure 14 Vibration damping

(1) Pump
(2) Damping device
(3) Shut-off device

Strong vibrations in the pipeline must be damped using flexible damping devices.
The damping devices must be installed beyond the supported flowmeter section and outside of the section between the shut-off devices.
Do not connect flexible damping devices directly to the flowmeter sensor.

5 ...Installation

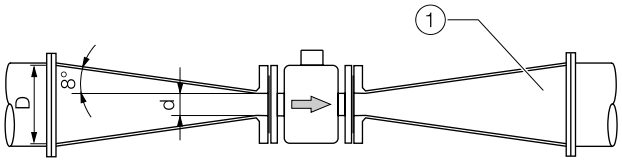

Figure 15 Using reduction pieces

(1) Transition piece

Determine the resulting pressure loss when using transition pieces:

1 Calculate the diameter ratio d/D.

2 Determine the flow velocity based on the flow range nomograph (Fig. 16).

3 Read the pressure drop on the Y-axis in Fig. 16

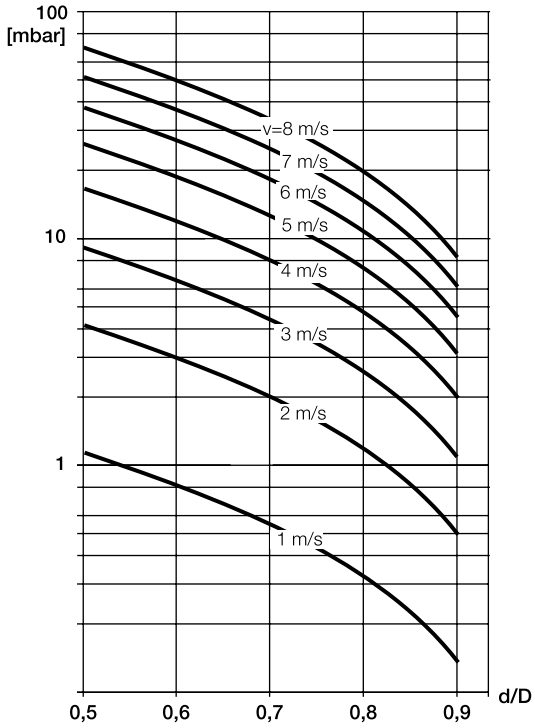

Figure 16 Nomograph for pressure drop calculations for flange transition piece with α/2 = 8°

5 ...Installation

Installing the sensor

Note
Potential damage to device.

- The use of graphite with the flange or process connection gaskets is prohibited. This is because, in some instances, an electrically conductive coating may form on the inside of the meter tube.
- Vacuum shocks in the piping should be avoided to prevent damage to the liners. Vacuum shocks can destroy the device.

The flowmeter sensor can be installed at any location in the piping while taking the installation conditions into account.

1 Remove protective plates, if present, to the right and left of the meter tube. To prevent possible leakage, make sure that the liner on the flange is not cut or damaged.
2 Position the flowmeter sensor coplanar and centered between the piping.

Note
For achieve the best results, ensure the gaskets fit concentrically with the meter tube
To ensure that the flow profile is not distorted, the gaskets must not protrude into the piping.

3 Use the appropriate screws for the holes in accordance with chapter "Torque information" on page 81.
4 Slightly grease the threaded nuts.
5 Tighten the nuts in a crosswise manner as shown in the figure. Observe the tightening torques in accordance with chapter "Torque information" on page 81. First tighten the nuts to approx. 50% of the maximum torque, then to 80 %, and finally a third time to the maximum torque. Do not exceed the maximum torque.

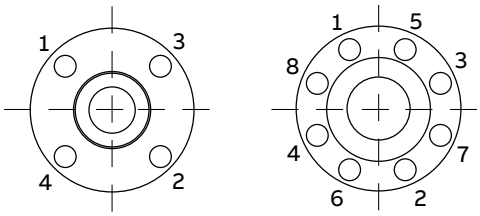

Figure 17 Tightening sequence for the flange screws

Opening and closing the terminal box

WARNING

Risk of injury due to live parts.

When the housing is open, contact protection is not provided and EMC protection is limited.

Before opening the housing, switch off the power supply.

Note
Impairment of the IP rating

- Make sure that the cover of the power supply terminals is mounted correctly.
- Check the O-ring gasket for damage and replace it if necessary before closing the housing cover.
- Check that the O-ring gasket is properly seated when closing the housing cover.

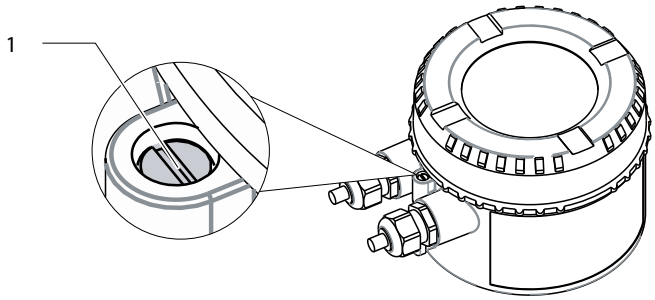

Figure 18 Cover safety device (example)

To open the housing, release the cover safety device by screwing in the screw (1).
After closing the housing, lock the housing cover by unscrewing the screw (1).

5 ...Installation

Rotating the LCD indicator

Depending on the installation position, the LCD display can be rotated in 4 increments of 90° to enable horizontal readings. Refer to chapter "Opening and closing the terminal box" on page 14.

Turn the LCD indicator:

Perform steps (A) to (G).

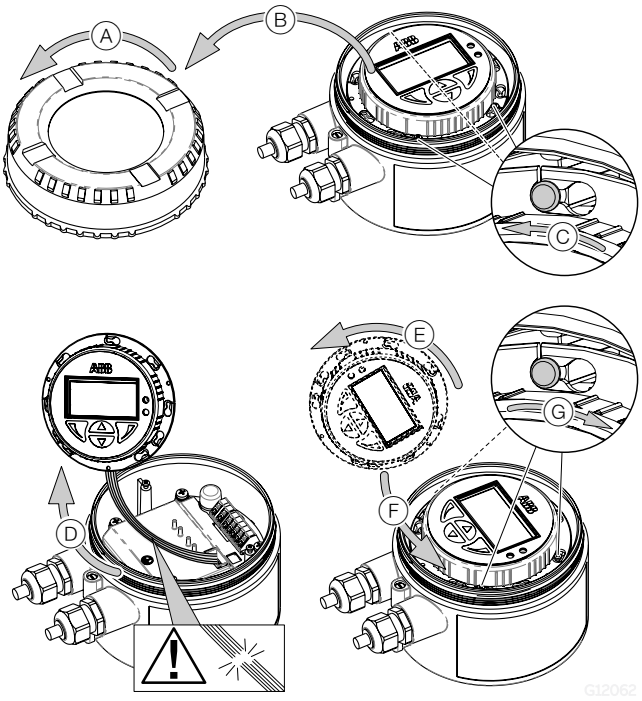

Figure 19 Rotating the LCD display (example)

Grounding the flowmeter sensor

General information on ground connections

Observe the following items when grounding the device:

- For plastic pipes or pipes with insulating lining, the earth is provided by the grounding ring or grounding electrodes.
- When stray potentials are present, install a grounding ring upstream and downstream of the flowmeter sensor.
- For measurement-related reasons, the potentials in the station ground and in the pipeline should be identical.

Note

If the flowmeter sensor is installed in plastic or earthenware pipelines, or in pipelines with an insulating lining, transient current may flow through the grounding electrode in special cases.

In the long term, this may destroy the sensor, since the grounding electrode will in turn degrade electrochemically. In these special cases, the connection to the earth must be performed using grounding rings. Install a grounding ring upstream and downstream of the device in this case.

Metal pipe with fixed flanges

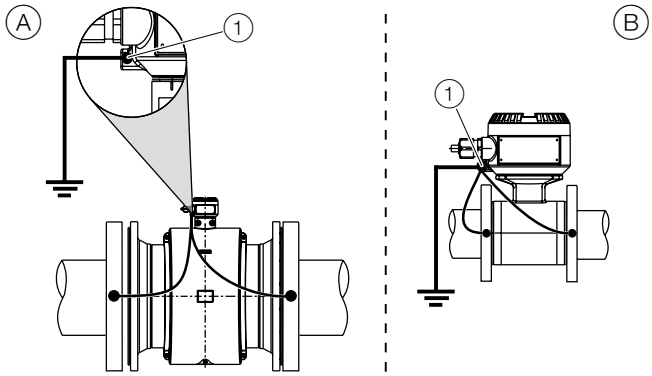

Figure 20 Metal pipe, without liner (example)

(A) Flange design
(B) Wafer-type design
(1) Ground terminal

Use a copper wire (at least 2.5 mm² (14 AWG)) to establish the ground connection between the sensor, the pipeline flanges and an appropriate grounding point.

5 ...Installation

...Grounding the flowmeter sensor

Metal pipe with loose flanges

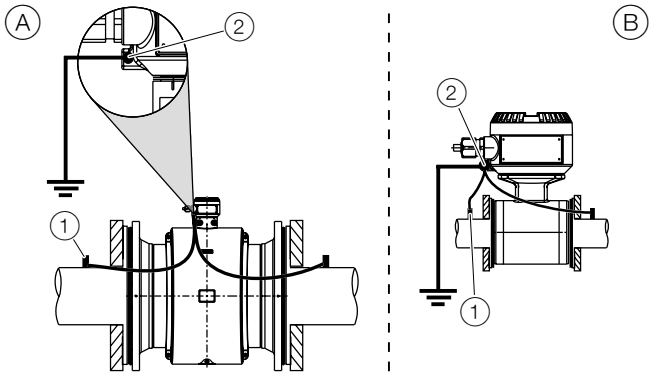

Figure 21 Metal pipe, without liner (example)

Ⓐ Flange design
Ⓑ Wafer-type design
① Threaded nuts M6
② Ground terminal

1. Solder the threaded nuts M6 to the pipeline and connect the ground as shown in the illustration.
2. Use a copper wire (at least 2.5 mm2 (14 AWG)) to establish the ground connection between the sensor and an appropriate grounding point.

Plastic pipes, non-metallic pipes or pipes with insulating liner

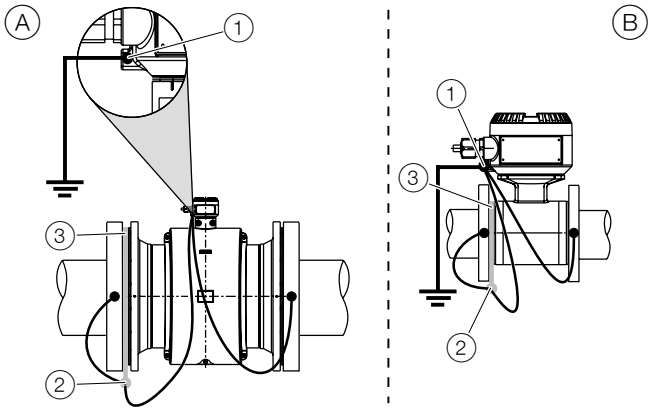

Figure 22 Plastic pipes, non-metallic pipes or pipes with insulating liner

Ⓐ Flange design
Ⓑ Wafer-type design
① Earth connection
② Terminal lug
③ Grounding ring

For plastic pipes or pipes with insulating lining, the grounding for the measuring medium is provided by the grounding ring as shown in the figure below or via grounding electrodes that must be installed in the device (option). If grounding electrodes are used, the grounding ring is not necessary.

1. Install the flowmeter sensor with grounding ring in the pipeline.
2. Connect the terminal lug for the grounding ring and ground connection on the flowmeter sensor with the grounding strap.
3. Use a copper wire (min. 2.5 mm² (14 AWG)) to link the ground connection to a suitable grounding point.

Grounding for devices with protective plates

The protective plates are used to protect the edges of the liner in the meter tube, e.g., for abrasive fluids. In addition, they function as a grounding ring.

- For plastic or pipes with insulating lining, electrically connect the protective plate in the same manner as a grounding ring.

5 ...Installation

...Grounding the flowmeter sensor

Installation and grounding in pipelines with cathodic corrosion protection

The installation of electromagnetic flowmeters in systems with cathodic corrosion protection must be made in compliance with the corresponding system conditions.
The following factors are especially important:

1 Pipelines inside electrically conductive or insulating.

2 Pipelines completely or for the most part with cathodic corrosion protection (CCP) or mixed systems with CCP areas and PE areas.

- When installing an electromagnetic flowmeter in pipes with insulating inner lining and free from foreign matter, it should be insulated with grounding rings on the upstream and downstream side. The corrosion protection potential is diverted. The grounding rings upstream and downstream of the electromagnetic flowmeter are connected to functional earth (Fig. 23 / Fig. 24).
- If the occurrence of external stray currents is to be expected in pipelines with internal insulation (e.g. in the case of long pipe sections in the vicinity of power supply units), an uninsulated pipe of approx. 1/4 x DN of length should be provided upstream and downstream of the flowmeter sensor in order to deviate these currents away from the measuring system (Fig. 25).

Internally insulated pipelines with cathodic corrosion protection potential

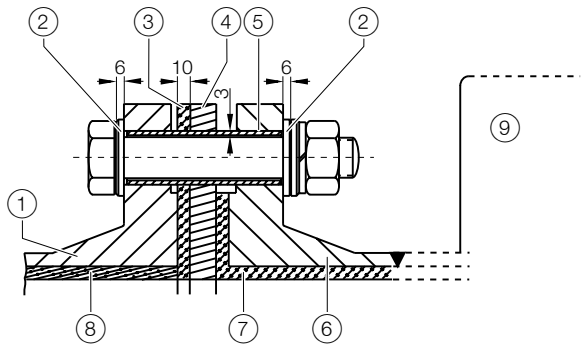

Figure 23 Bolt screw view

1 Pipe flange
2 Insulating plate
3 Gasket / insulating ring
4 Grounding plate
5 Insulating pipe
6 Flange
7 Lining
8 Insulation
9 Flowmeter sensor

Install grounding rings on each side of the flowmeter sensor. Insulate the grounding rings from the pipe flanges and connect them to the flowmeter sensor and to functional earth. Insulate the screw bolts for the flange connections when mounting. The insulation plates and the insulation pipe are not included in the delivery. They must be provided onsite by the customer.

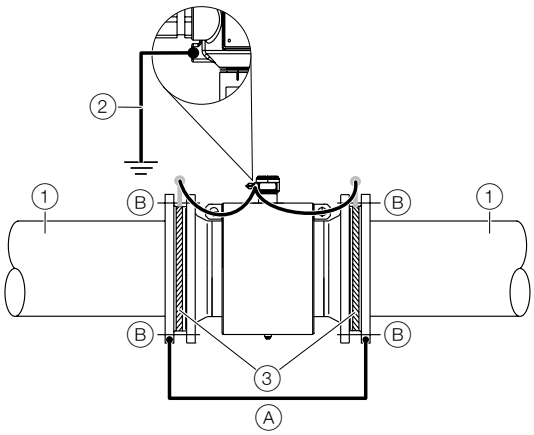

Figure 24 Flowmeter sensor with grounding plate and functional earth

A Connecting line for corrosion protection potential[1])
B Insulated screw bolts without grounding rings
1 Insulated pipe
2 Functional earth
3 Grounding plate

* ≥ 4 mm² Cu, not included in the delivery, to be provided on-site

The corrosion protection potential must be diverted through a connecting line A away from the insulated installed sensor.

Mixed system pipeline with cathodic corrosion protection and functional earth potentials

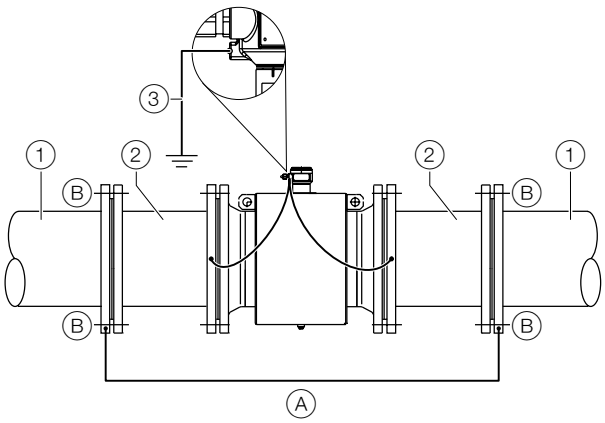

Figure 25 Flowmeter sensor with functional earth

A Connecting line for corrosion protection potential[1])
B Insulated screw bolts without grounding rings
1 Insulated pipe
2 Bare metal pipe
3 Functional earth

* ≥ 4 mm² Cu, not included in the delivery, to be provided on-site

This mixed system has an insulated pipeline with corrosion protection potential and an uninsulated bar metal pipe (L = 1/4 x flowmeter sensor size) with functional earth potential upstream and downstream of the flowmeter sensor.
The Fig. 25 shows the preferred installation for cathodic corrosion protection systems.

5 ...Installation

Electrical connections

WARNING

Risk of injury due to live parts

Improper work on the electrical connections can result in electric shock.

- Connect the device only with the power supply switched off.
- Observe the applicable standards and regulations for the electrical connection.

The electrical connection may only be established by authorized specialist personnel and in accordance with the connection diagrams.
The electrical connection information in the manual must be observed; otherwise, the type of electrical protection may be adversely affected.
Ground the measurement system according to requirements.

Connecting the power supply

Note

- Observe the power supply limit values in accordance with the information on the name plate.
- Observe the voltage drop for large cable lengths and small conductor cross-sections. The voltage at the terminals of the device may not fall below the minimum value required in accordance with the information on the name plate.

The power supply is connected to terminal L (phase), N (neutral), or 1+, 2-, and PE, as stated on the name plate.
A circuit breaker with a maximum rated current of 16 A must be installed in the power supply line of the transmitter.
The wire cross-sectional area of the power supply cable and the circuit breaker used must comply with VDE 0100 and must be dimensioned in accordance with the current consumption of the flowmeter measuring system. The cables must comply with IEC 227 and/or IEC 245.

The circuit breaker should be located near the transmitter and marked as being associated with the device.
Connect the transmitter and sensor to functional earth.

Installing the connecting cables

Observe the following points when routing signal cables:

- A magnet coil cable (red and brown) is run parallel to the signal lines (violet and blue). As a result, only one cable is required between the flowmeter sensor and the transmitter. Do not run the cable over junction boxes or terminal strips.
- The signal cable carries a voltage signal of only a few millivolts and must, therefore, be routed over the shortest possible distance. The maximum allowable signal cable length is 164 ft (50 m).
- Avoid routing the cable in the vicinity of electrical equipment or switching elements that can create stray fields, switching pulses, and induction. If this is not possible, run the signal / magnet coil cable through a metal pipe and connect this to the station ground.
- All leads must be shielded and connected to the station ground potential.
- To shield against magnetic interspersion, the cable contains outer shielding. This is attached to the SE clamp.
- The supplied stranded steel wire is also connected to the SE clamp
- Do not damage the sheathing of the cable during installation.
- Ensure that a drip loop (water trap) is used when installing the connecting cables for the sensor.

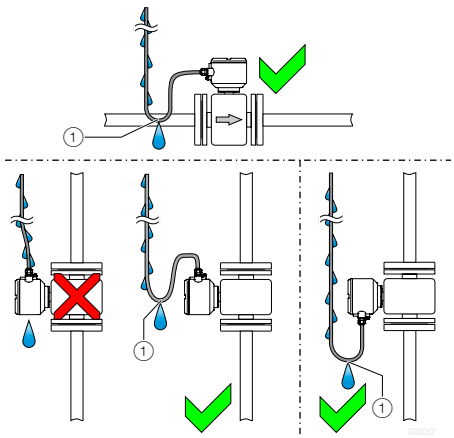

Figure 26 Laying of the connecting cable

(1) Drip loop

5 ...Installation

Connection via cable conduit

Figure 27 Installation set for cable conduit

Note
Condensate formation in terminal box
If the flowmeter sensor is connected to cable conduits, there is a possibility that humidity may get into the terminal box because of condensate formation in the cable conduit.
Ensure that the cable entry points on the terminal box are sealed.

An installation set for sealing the cable conduit is available via order number 3KXF081300L0001.

Connection with IP rating IP 68

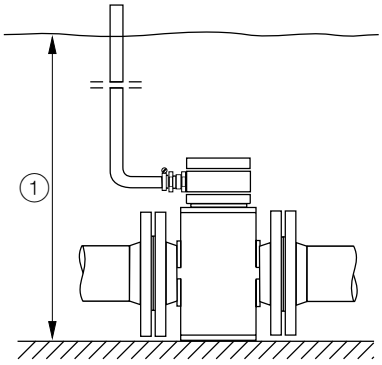

Figure 28 Maximum flooding height

(1) Maximum flooding height 16.4 ft (5 m)

For sensors with IP rating IP 68, the maximum flooding height is 16.4 ft (5 m). The supplied cable fulfills all submersion requirements.
The sensor is type-tested in accordance with EN 60529. Test conditions: 14 days at a flooding height of 16.4 ft (5 m).

Connection

Note
Potential adverse effect on IP rating IP 68.
The IP rating IP 68 of the sensor may be adversely affected as a result of damage to the signal cable.
The sheathing of the signal cable must not be damaged.

1. Use the supplied signal cable to connect the sensor and the transmitter.
2. Connect the signal cable in the terminal box of the sensor.
3. Route the cable from the terminal box to above the maximum flooding height of 16.4 ft (5 m).
4. Tighten the cable gland.
5. Carefully seal the terminal box. Make sure the gasket for the cover is seated properly.

Note
As an option, the sensor can be ordered with the signal cable already connected to the sensor and the terminal box already potted.

5 ...Installation

Potting the terminal box on-site

If the terminal box is to be potted subsequently on-site, a special two-component potting compound can be ordered separately (order no. D141B038U01). Potting is only possible if the sensor is installed horizontally. Observe the following instructions during work activity.

⚠ CAUTION

Health hazard.
The two-component potting compound is toxic – observe all relevant safety measures.
Follow the Material Safety Data Sheet that are provided by the manufacturer prior to starting any preparations.
Hazard warnings:
- R20: Harmful by inhalation.
- R36 / 37 / 38: Irritating to eyes, respiratory system and skin.
- R42 / 43: May cause sensitization by inhalation and skin contact.

Safety advice:
- S23: Do not breathe gas/fumes/vapor/spray.
- S24: Avoid contact with skin.
- S37: Wear suitable gloves
- S63: In case of accident by inhalation: remove casualty to fresh air and keep at rest.

Preparation

- Complete the installation before potting in order to avoid moisture penetration. Before starting, check all the connections for correct fitting and stability.
- Do not overfill the terminal box. Keep the potting compound away from the O-ring and the gasket / groove (see Fig. 29).
- Prevent the two-component potting compound from penetrating the cable conduit if an NPT 1/2" installation is used.

Procedure

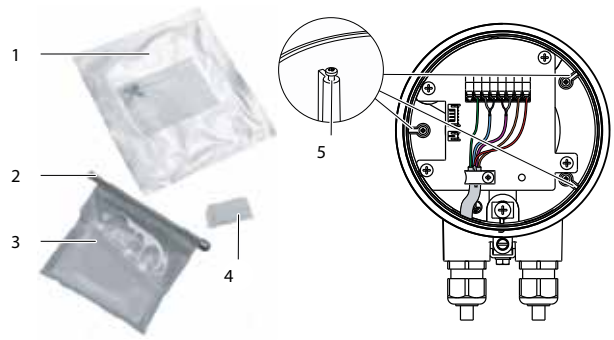

Figure 29 Procedure

(1) Packing bag
(2) Connection clamp
(3) Two-component potting compound
(4) Drying bag
(5) Maximum filling level

1 Cut open the protective enclosure of the two-component potting compound (see packing).
2 Remove the connection clamp of the potting compound.
3 Knead both components thoroughly until a good mix is reached.
4 Cut open the bag at a corner. Perform work activity within 30 minutes.
5 Carefully fill the terminal box with the two-component potting compound until the connection cable is covered.
6 Wait a few hours before closing the cover in order to allow the compound to dry, and to release any possible gas.
7 Ensure that the packaging material and the drying bag are disposed of in an environmentally sound manner.

5 ...Installation

Electrical connection

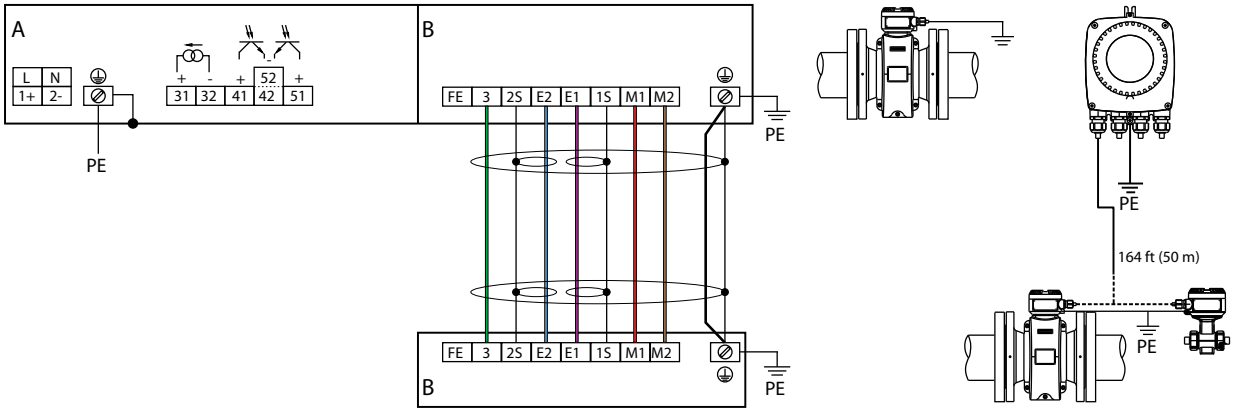

Figure 30 Electrical connections

(A) Connections for power supply and outputs

(B) Connections for signal cable (remote mount design only)

Note

For detailed information about earthing the transmitter and the sensor, please refer to chapter "Grounding the flowmeter sensor" on page 15.

Connections for the power supply

AC power supply	
Terminal	**Function / comments**
L	Phase
N	Neutral conductor
PE / ⏚	Protective earth (PE)

DC power supply	
Terminal	**Function / comments**
1+	+
2-	-
PE / ⏚	Protective earth (PE)

Connections for outputs

Terminal	**Function / comments**
31 / 32	**Active current output** The current output is "active" mode. The source to drive the 20 mA loop is in-built in the transmitter.
41 / 42	**Passive digital output DO1** The output can be configured as a pulse output, frequency output or switch output on site.
51 / 52	**Passive digital output DO2** The output can be configured as a pulse output, frequency output or switch output on site.
⏚	**Functional earth**

Connections for the signal cable

Only for remote mount design.

Terminal	**Function / comments**	**Color**
FE	Not connected	-
3	Measurement potential	green
2S	Signal line	-
E2	Signal line	blue
E1	Signal line	violet
1S	Shield for E1	-
M1	Magnet coil	brown
M2	Magnet coil	red
⏚	Shield	-
-	Not connected	orange/yellow

5 ...Installation

Electrical data for inputs and outputs

Power supply L / N, 1+ / 2-

AC power supply	
Terminals	L / N
Operating voltage	100 … 240 V AC (-15 % / +10 %), 47 … 64 Hz
Power consumption	< 20 VA
Inrush current	8.8 A

DC voltage supply	
Terminals	1+ / 2-
Operating voltage	24 ... 48V DC (-10 % / +10 %)
Ripple	< 5 %
Power consumption	< 10 W
Inrush current	5.6 A

Current output 31 / 32

Can be configured for outputting mass flow, volume flow.

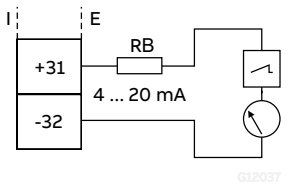

Figure 31 Connection example active current output 31 / 32 (I = internal, E = external, R_B = load)

Current output	Active
Terminals	31 / 32
Output signal	4 … 20 mA
Load RB	0 Ω ≤ RB ≤ 650 Ω

Digital output 41 / 42, 51 / 52

Can be configured as pulse, frequency or binary output.

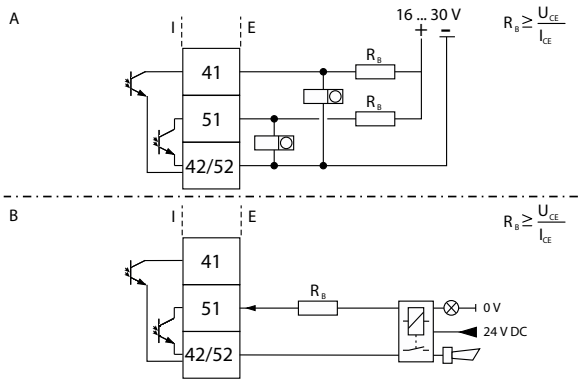

Figure 32 (I = internal, E = external, R_B = load)

(A) Passive digital output 41 / 42, 51 / 52 as pulse or frequency output

(B) Passive digital output 51 / 52 as binary output

Note

- Terminals 42 / 52 have the same ground potential. Digital outputs 41 / 42 and 51 / 52 are not electrically isolated from each other.
- If you are using a mechanical counter, we recommend setting a pulse width of ≥ 30 ms and a maximum frequency of fmax ≤ 3 kHz.

Pulse / frequency output (passive)	
Terminals	41 / 42, 51 / 52
U_{max}	30 V DC
I_{max}	25 mA
f_{max}	10.5 kHz
Pulse width	0.1 … 2000 ms

Binary output (passive)	
Terminals	41 / 42, 51 / 52
U_{max}	30 V DC
I_{max}	25 mA
Switching function	Can be configured using software as: System alarm, empty pipe alarm, max. / min. alarm, flow direction signaling, others

5 ...Installation

Connection to integral mount design

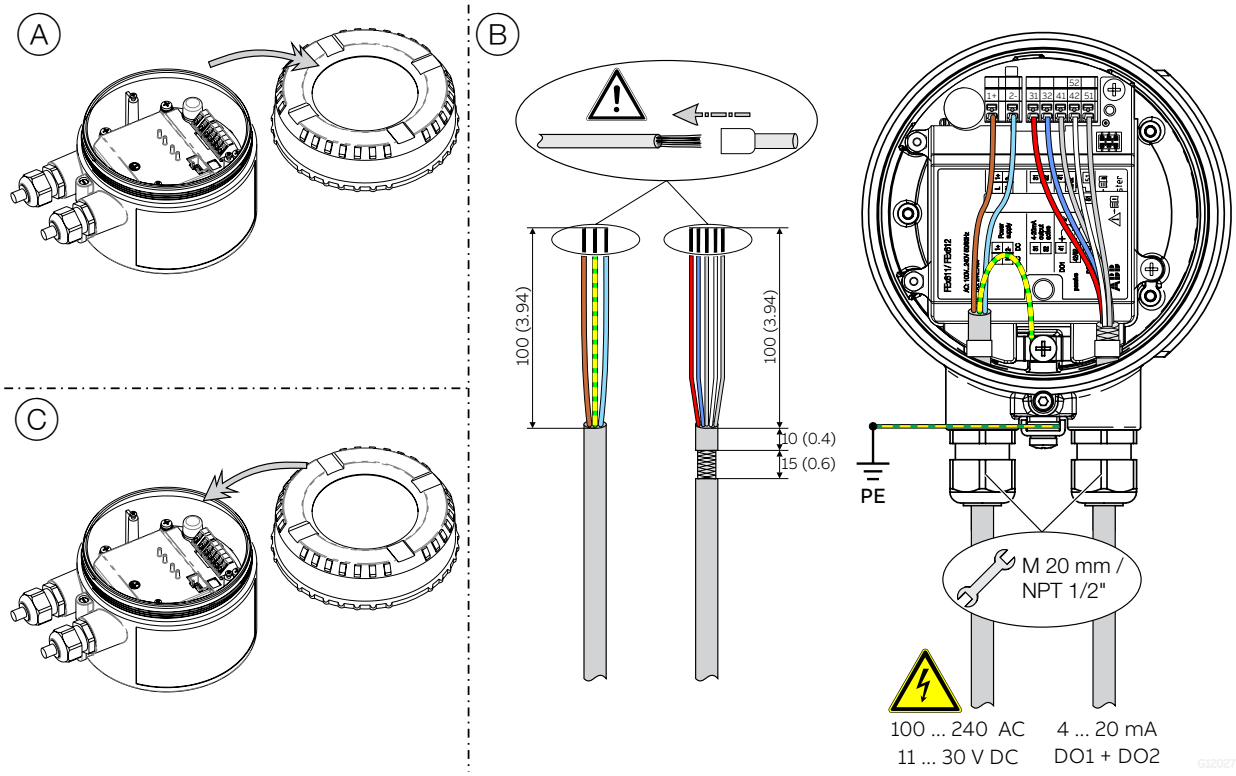

Figure 33 Connection on the device (example), dimensions in inch (mm) PE = potential equalization

Note
If the O-ring gasket is seated incorrectly or damaged, this may have an adverse effect on the housing protection class.
Follow the instructions in chapter "Opening and closing the terminal box" on page 14 to open and close the housing safely.

Connect compact design: Perform steps Ⓐ ... Ⓒ.
In the process, observe the following instructions:

- Lead the cable for the power supply into the terminal box through the left cable entry.
- Lead the cables for the analog outputs and the digital outputs into the terminal box through the right cable entry.
- Connect the cables according to the electrical plan. Connect the cable shields to the designated grounding clamp in the terminal box.
- Connect the potential equalization (PE) on the ground terminal to the terminal box.
- Use wire end ferrules when connecting.

Note

- Observe the power supply limit values in accordance with the information on the name plate.
- Observe the voltage drop for large cable lengths and small conductor cross-sections. The voltage at the terminals of the device may not fall below the minimum value required in accordance with the information on the name plate.

The power supply is connected to terminal L (phase), N (neutral), or 1+, 2-, and PE, as stated on the name plate.
A circuit breaker with a maximum rated current of 16 A must be installed in the power supply line of the transmitter.
The wire cross-sectional area of the power supply cable and the circuit breaker used must comply with VDE 0100 and must be dimensioned in accordance with the current consumption of the flowmeter measuring system. The cables must comply with IEC 227 and/or IEC 245.
The circuit breaker should be located near the transmitter and marked as being associated with the device.
Connect the transmitter and sensor to functional earth.

5 ...Installation

Connection to remote mount design

Note

Use wire end sleeves.

- Wire end sleeves 0.75 mm2 (AWG 19), for shielding (1S, 2S).
- Wire end sleeves 0.5 mm2 (AWG 20), for all other wires.

The shields may not touch (signal short circuit).

Flowmeter sensor site

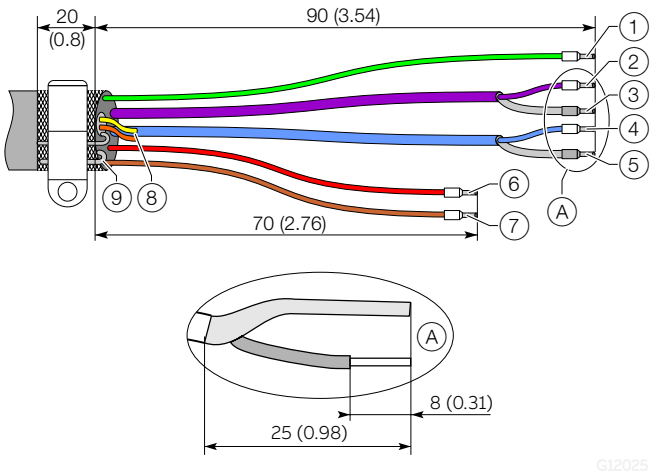

Figure 34 Signal Cable Part No. D173D031U01, Dimensions in inch (mm)

Pos.	Terminal	Function / comments	Color
1	3	Measurement potential	green
2	E1	Signal line	violet
3	1S	Shield for E1	—
4	E2	Signal line	blue
5	2S	Shield for E2	—
6	M2	Magnet coil	red
7	M1	Magnet coil	brown
8	_	Not connected	yellow
	_	Not connected	orange
9	SE / ⏚	Shield	—

Transmitter side

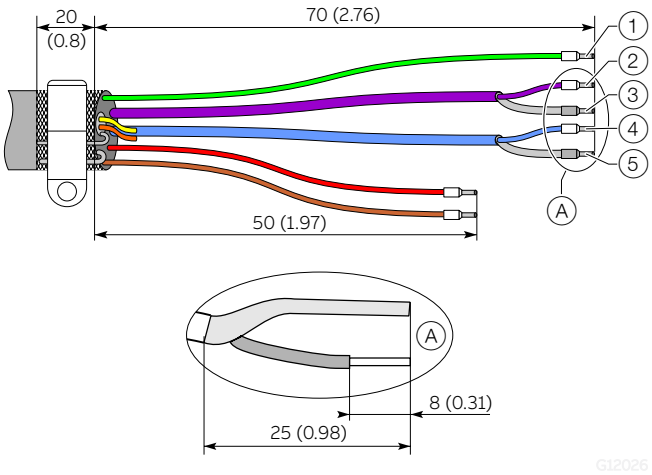

Figure 35 Signal Cable Part No. D173D031U01, Dimensions in mm (inch)

Pos.	Terminal	Function / comments	Color
1	3	Measurement potential	green
2	E1	Signal line	violet
3	1S	Shield for E1	—
4	E2	Signal line	blue
5	2S	Shield for E2	—
6	M2	Magnet coil	red
7	M1	Magnet coil	brown
8	_	Not connected	yellow
	_	Not connected	orange
9	SE / ⏚	Shield	—

5 ...Installation

Transmitter

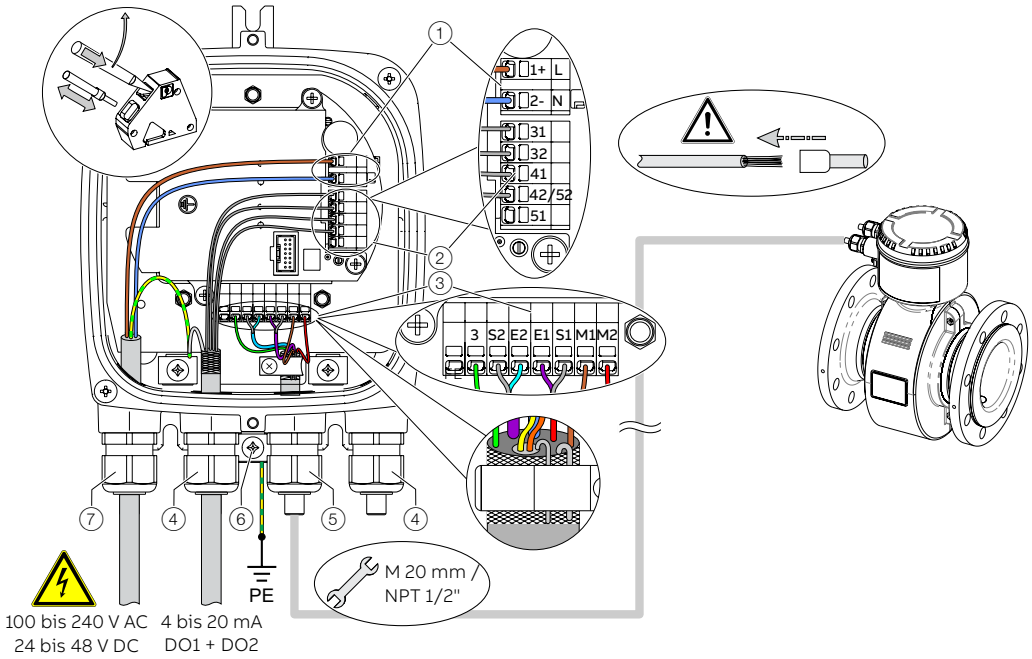

Figure 36 Connection to transmitter in remote mount design (example)

1. Terminals for power supply
2. Terminal for signal cable
3. Terminals for inputs and outputs
4. Cable entry for inputs and outputs
5. Cable entry for signal cable
6. Terminal for potential equalization
7. Cable entry for power supply

Note

If the O-ring gasket is seated incorrectly or damaged, this may have an adverse effect on the housing protection class. Follow the instructions in chapter "Opening and closing the terminal box" on page 14 to open and close the housing safely.

Observe the following points when connecting to an electrical supply:

- Lead the cable for the power supply and the signal inputs and outputs into the housing as shown.
- Connect the cables in accordance with the electrical connection diagram. If present, connect the cable shielding to the earthing clamp provided.
- Use wire end ferrules when connecting.
- Close unused cable entries using suitable plugs.

Note

- Observe the power supply limit values in accordance with the information on the name plate.
- Observe the voltage drop for large cable lengths and small conductor cross-sections. The voltage at the terminals of the device may not fall below the minimum value required in accordance with the information on the name plate.

The power supply is connected to terminal L (phase), N (neutral), or 1+, 2-, and PE, as stated on the name plate.
A circuit breaker with a maximum rated current of 16 A must be installed in the power supply line of the transmitter.
The wire cross-sectional area of the power supply cable and the circuit breaker used must comply with VDE 0100 and must be dimensioned in accordance with the current consumption of the flowmeter measuring system. The cables must comply with IEC 227 and/or IEC 245.
The circuit breaker should be located near the transmitter and marked as being associated with the device.
Connect the transmitter and sensor to functional earth.

5 ...Installation

Sensor

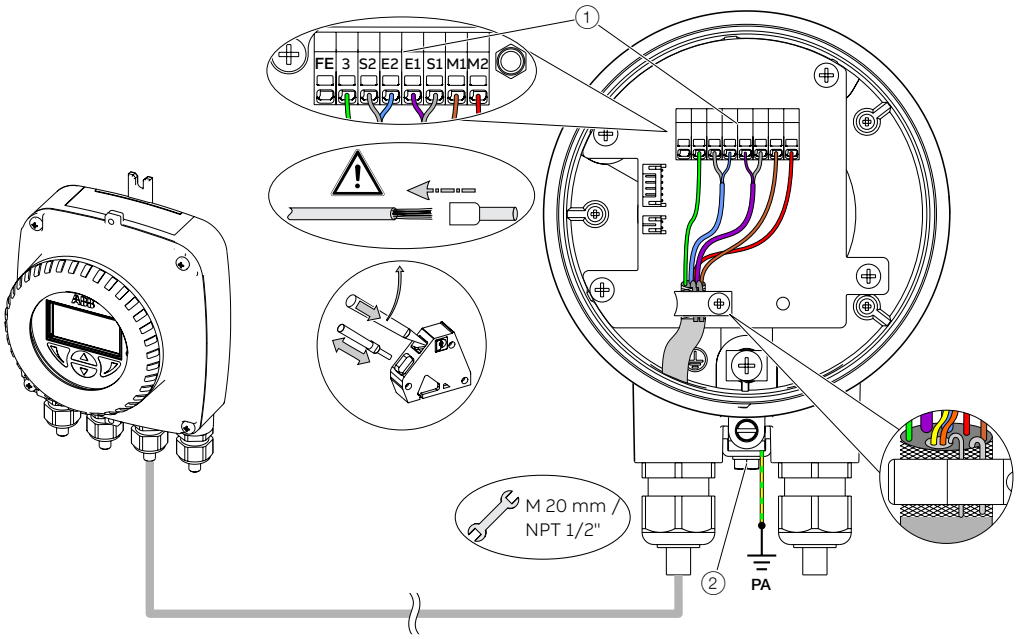

Figure 37 Connection to sensor in remote mount design (example)

(1) Terminals for signal cable

(2) Terminal for potential equalization

Note

If the O-ring gasket is seated incorrectly or damaged, this may have an adverse effect on the housing protection class. Follow the instructions in chapter "Opening and closing the terminal box" on page 14 to open and close the housing safely.

Observe the following points:

- Lead the signal cable into the housing as shown.
- Connect the cables in accordance with the electrical connection diagram. If present, connect the cable shielding to the earthing clamp provided.
- Use wire end ferrules when connecting.
- Close unused cable entries using suitable plugs.

6 Commissioning

Safety instructions

⚠ CAUTION

Risk of burns due to hot measuring media
The device surface temperature may exceed 158 °F (70 °C), depending on the measuring medium temperature.
Before starting work on the device, make sure that it has cooled sufficiently.

Aggressive or abrasive measuring medium may result in damage to the wetted parts of the flowmeter sensor. As a result, pressurized measuring medium may escape prematurely.

Due to wear on the flange seal or process connection gaskets (e.g., threaded pipe connections, Tri-Clamp, etc.), a pressurized measuring medium may escape.
When using internal flat gaskets, these can become embrittled through CIP/SIP processes.
If there is a chance that safe operation is no longer possible, take the device out of operation and secure it against unintended startup.

Write-protection switch, service LED and local operating interface

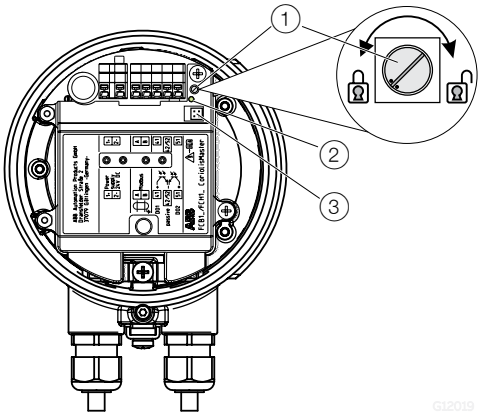

Figure 38 Write-protection switch, service LED and local operating interface

1. Write protection switch
2. Service LED
3. Local operating interface

Write protection switch

If write protection is active, the parameterization of the device cannot be changed via the local operating interface or the local display.
Turning the write protection switch clockwise deactivates the write protection while turning the switch counter-clockwise activates it.

Service LED

The service LED, which indicates the operating condition of the device, is located in the sensor terminal box.

Service LED	Description
Flashes rapidly (100 ms)	Starting sequence, device not yet ready for operation
Lit up continuously	Device operating, no critical error
Flashes slowly (1 second)	A critical error has occurred, see chapter "Diagnosis / error messages" on page 62

Local operating interface

The sensor can also be parameterized without a local display via the local operating interface, see chapter "Parameterization via the local operating interface" on page 29.

6 ...Commissioning

Checks prior to commissioning

The following points must be checked before commissioning the device:

- The wiring must have been completed as described in the chapter "Electrical connections" on page 18.
- The correct grounding of the sensor.
- The ambient conditions must meet the requirements set out in the technical data.
- The power supply must meet the requirements set out on the identification plate.

Remote Sensor - Checking for the correct sensor to transmitter assignment

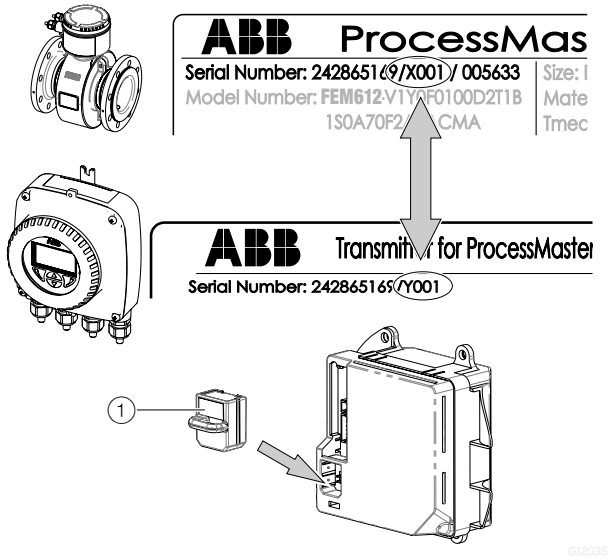

Figure 39 Sensor to transmitter assignment

(1) SensorMemory

The SensorMemory is a pluggable data storage device located on the rear side of the transmitter cartridge.
The SensorMemory is labeled with an order number and an end number.

The end number is shown on the nameplate of the corresponding flowmeter sensor. These numbers must be identical.

Parameterization of the device

The ProcessMaster FEM610 can be commissioned and operated via the integrated LCD indicator (see chapter "Parameterization via the "Easy Setup" menu function" on page 32).

Alternatively, the ProcessMaster FEM610 can also be commissioned and operated via ABB Asset Vision Basic (FEx61x DTM).

Flowmeter without display through a hot pluggable display

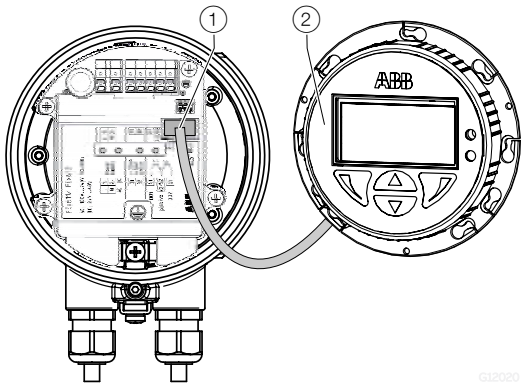

Figure 40 Optional LCD display

(1) Connector plug for LCD display
(2) LCD display

The “non display” version of the device can be parameterized using a display which is available as an accessory to the flowmeter.

6 ...Commissioning

Parameterization via the infrared service port adapter

Configuration via the infrared service port adapter on the device requires a PC / notebook and the FZA100 infrared service port adapter.

All parameters can also be set using the HART DTM available at www.abb.com/flow and the "ABB AssetVision" software.

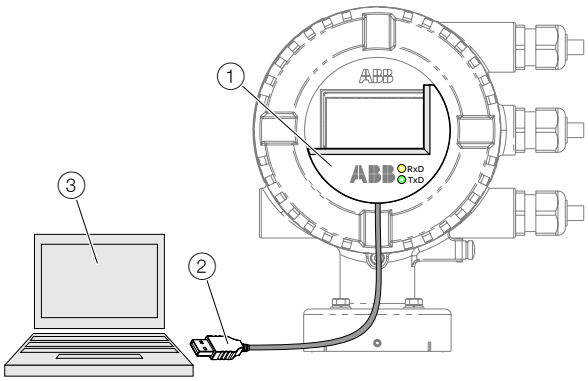

Figure 41 Infrared service port adapter on transmitter (example)

1. Infrared service port adapter
2. USB interface cable
3. PC / notebook running ABB AssetVision and HART DTM

1 Position the infrared service port adapter on the front plate of the transmitter as shown
2 Insert USB interface cable into a free USB female connector on the PC / notebook.
3 Switch on the device power supply.
4 Start ABB AssetVision and perform the parameterization of the equipment.

Detailed information on operating the software is available in the relevant operating instructions and the DTM online help.

Parameterization via the local operating interface

A PC / notebook and the USB interface cable are required to configure the device via the device's local operating interface. In conjunction with the HART-DTM and the software "ABB AssetVision" available at www.abb.com/flow, all parameters can also be set without the need for a local display.

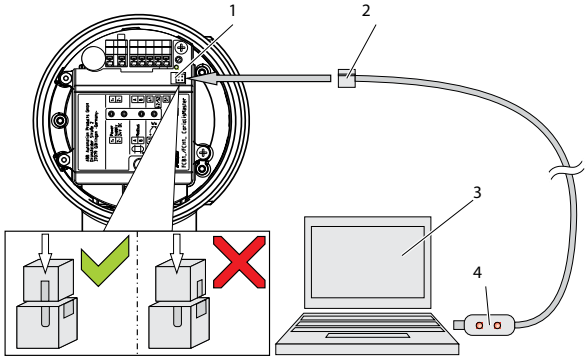

Figure 42 Connection to the local operating interface

1. Local operating interface
2. Programming plug
3. PC / notebook
4. USB interface cable

1 Open device terminal box.
2 Connect programming plug to the local operating interface of the device.
3 Insert USB interface cable into a free USB female connector on the PC / notebook.
4 Switch on the device power supply.
5 Start ABB AssetVision and perform the parameterization of the equipment.

Detailed information on operating the software is available in the relevant operating instructions and the DTM online help.

6 ...Commissioning

Factory settings

The device can be factory parameterized to customer specifications upon request. If no customer information is available, the device is delivered with factory settings.

Parameter	Factory setting
Qv Max 1	Q_{max}DN (see table in chapter "Measuring range table" on page 34)
Sensor Tag	None
TX Location TAG	None
Unit Volumeflow Qv	ugal/min (US galon/minute)
Unit Vol. Totalizer	ugal (US galon)
Pulses per Unit	1
Pulse Width	100 ms
Damping	1 s
Digital output 41 / 42	Impulse für Forward & Reverse
Digital output 51 / 52	Flow Direction
Current output	4-20mA FWD/REV
Curr.Out at Alarm	High Alarm, 21.8 mA
Current at flowrate > 20.5 mA	Off
Low Flow Cut Off	1 %
EPD Alarm	Off

Switching on the power supply

- Switch on the power supply.

The LCD display shows the following display during the startup process:

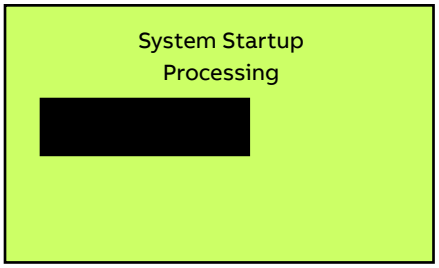

The process display is displayed after the startup process.

Parameterization via the "Easy Setup" menu function

Settings for the most common parameters are summarized in the ‘Easy Setup’ menu. This menu provides the fastest way to configure the device.

The following section describes parameterization via the ‘Easy Setup’ menu function.

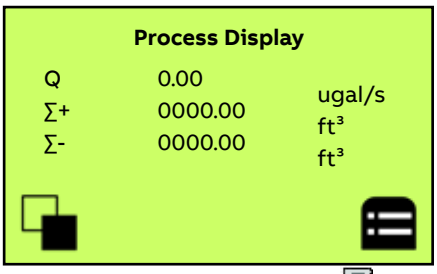

1 Switch to the configuration level with .

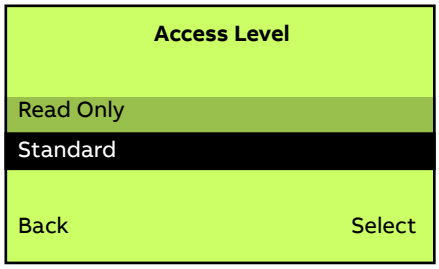

2 Use / to select ‘Standard’.
3 Confirm the selection with .

4 Use to confirm the password. A password is not available as factory default; you can continue without entering a password.

6 ...Commissioning

...Parameterization via the "Easy Setup" menu function

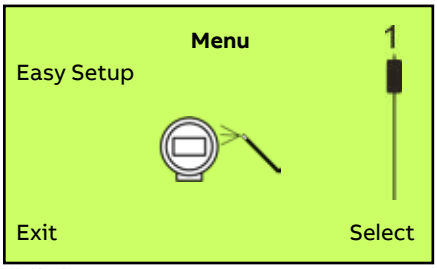

5 Use ⌃/⌄ to select 'Easy Setup'.
6 Confirm the selection with ◤.

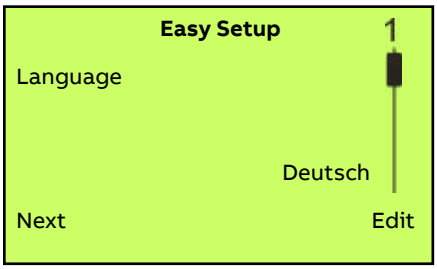

7 Use ◤ to call up the edit mode.
8 Use /⌄ to select the desired language.
9 Confirm the selection with ◤.

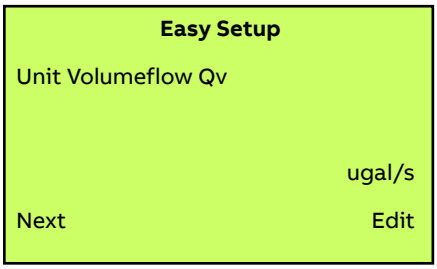

10 Use ◤ to call up the edit mode.
11 Use ⌃/⌄ to select the desired unit for the volume flow rate.
12 Confirm the selection with ◤.

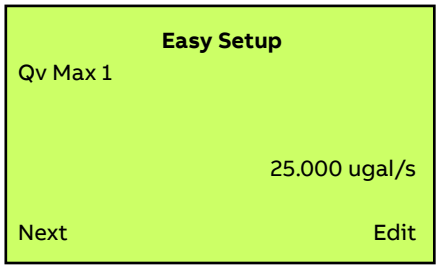

13 Use ◤ to call up the edit mode.
14 Use ⌃/⌄ to set the desired upper range value.
15 Confirm the selection with ◤.

The device is factory calibrated to the flow range end value QmaxDN, unless other customer information is available. The ideal flow range end values are approximately 6.5 to 10 ft/s (2 to 3 m/s) (0.2 ... 0.3 x QmaxDN).
The possible flow range end values are shown in the table in chapter "Measuring range table" on page 34.

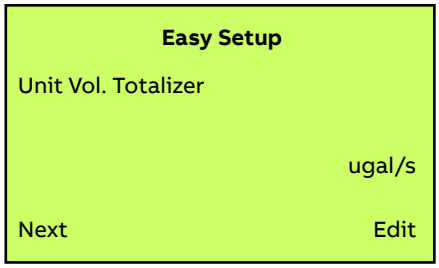

16 Use ◤ to call up the edit mode.
17 Use ⌃/⌄ to select the desired unit for the volume totalizer.
18 Confirm the selection with ◤.

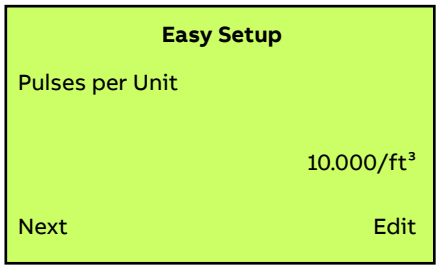

19 Use ◤ to call up the edit mode.
20 Use ⌃/⌄ to select the desired pulse per unit for the pulse output.
21 Confirm the selection with ◤.

6 ...Commissioning

...Parameterization via the "Easy Setup" menu function

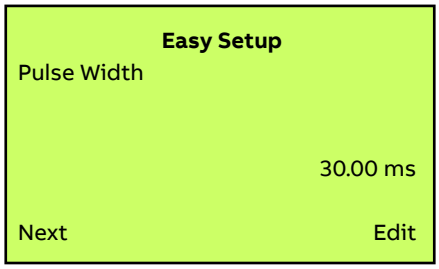

22 Use to call up the edit mode.
23 Use / to select the desired pulse width for the pulse output..
24 Confirm the selection with .

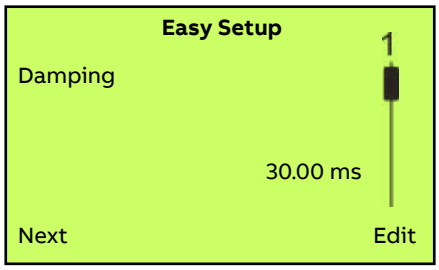

25 Use to call up the edit mode.
26 Use / to set the desired damping.
27 Confirm the selection with .

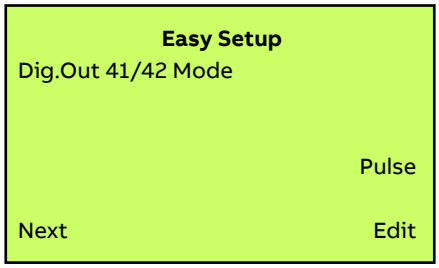

28 Use to call up the edit mode.
29 Use / to select the desired operating modeOff, Logic, Pulse, Frequency for the digital output.
30 Confirm the selection with .

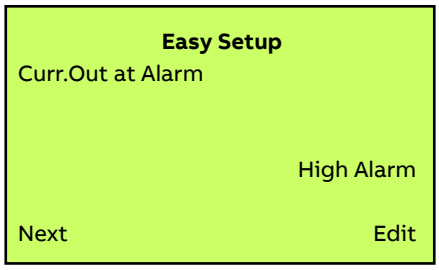

31 Use to call up the edit mode.
32 Use / to select the desired alarm mode.
33 Confirm the selection with .

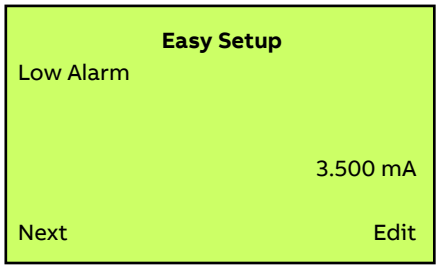

34 Use to call up the edit mode.
35 Use / to set the desired current for Low Alarm.
36 Confirm the selection with .

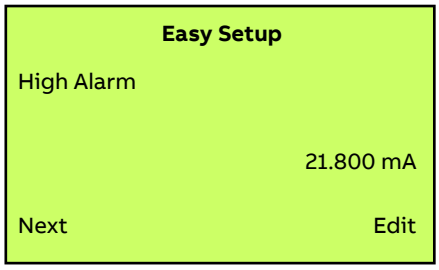

37 Use to call up the edit mode.
38 Use / to set the desired current for High Alarm.
39 Confirm the selection with .

6 ...Commissioning

...Parameterization via the "Easy Setup" menu function

Zero point adjustment of the flowmeter

Note
Prior to starting the zero point adjustment, make sure that:

- There is no flow through the sensor (close all valves, shut-off devices etc.)
- The sensor is completely filled with the medium to be measured

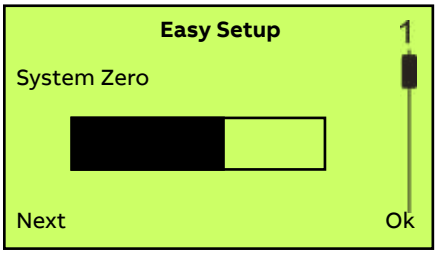

- Use to start automatic adjustment of the zero point for the system.

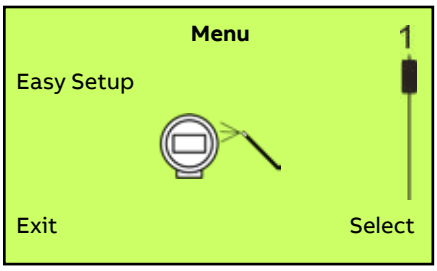

Once all parameter have been set, the main menu appears again. The most important parameters are now set.

40 Use to switch to the process display.

6 ...Commissioning

Measuring range table

The flow range end value can be set between 0.02 x Q_{max}DN and 2 x Q_{max}DN.

Nominal diameter DN	**in**	**Min. flow range end value 0.02 × Q_{max}DN ≈ .656 ft/s (0.2 m/s)**	**Q_{max}DN 0 to ≈ 32.8 ft/s (10 m/s)**	**Max. flow range end value 2 × Q_{max}DN ≈ 65.6 ft/s (20 m/s)**
3	**1/10**	0.08 l/min (0.02 US gal/min)	4 l/min (1.06 US gal/min)	8 l/min (2.11 US gal/min)
4	**5/32**	0.16 l/min (0.04 US gal/min)	8 l/min (2.11 US gal/min)	16 l/min (4.23 US gal/min)
6	**¼**	0.4 l/min (0.11 US gal/min)	20 l/min (5.28 US gal/min)	40 l/min (10.57 US gal/min)
10	**⅜**	0.9 l/min (0.24 US gal/min)	45 l/min (11.9 US gal/min)	90 l/min (23.78 US gal/min)
15	**½**	2 l/min (0.53 US gal/min)	100 l/min (26.4 US gal/min)	200 l/min (52.8 US gal/min)
25	**1**	4 l/min (1.06 US gal/min)	200 l/min (52.8 US gal/min)	400 l/min (106 US gal/min)
40	**1½**	12 l/min (3.17 US gal/min)	600 l/min (159 US gal/min)	1200 l/min (317 US gal/min)
50	**2**	1.2 m3/h (5.28 US gal/min)	60 m3/h (264 US gal/min)	120 m3/h (528 US gal/min)
80	**3**	3.6 m3/h (15.9 US gal/min)	180 m3/h (793 US gal/min)	360 m3/h (1585 US gal/min)
100	**4**	4.8 m3/h (21.1 US gal/min)	240 m3/h (1057 US gal/min)	480 m3/h (2113 US gal/min)

7 Operation

Safety instructions

⚠ CAUTION

Risk of burns due to hot measuring media
The device surface temperature may exceed 158 °F (70 °C), depending on the measuring medium temperature.
Before starting work on the device, make sure that it has cooled sufficiently.

Aggressive or abrasive measuring medium may result in damage to the wetted parts of the flowmeter sensor. As a result, pressurized measuring medium may escape prematurely.
Due to wear on the flange seal or process connection gaskets (e.g., threaded pipe connections, Tri-Clamp, etc.), a pressurized measuring medium may escape.
When using internal flat gaskets, these can become embrittled through CIP/SIP processes.
If there is a chance that safe operation is no longer possible, take the device out of operation and secure it against unintended startup.

Menu navigation

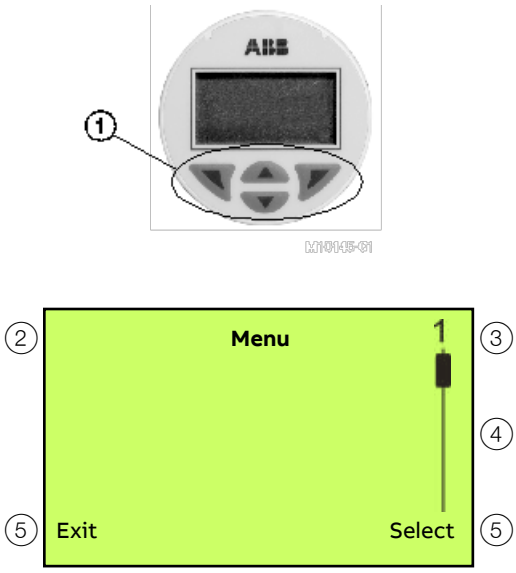

Figure 43 LCD display

1. Operating buttons for menu navigation
2. Menu name display
3. Menu number display
4. Marker for indicating relative position within the menu
5. Display showing the current functions of the and operating buttons

The LCD indicator has capacitive operating buttons. These enable you to control the device through the closed housing cover.

Note
The transmitter automatically calibrates the capacitive buttons on a regular basis. If the cover is opened during operation, the sensitivity of the buttons is firstly increased to enable operating errors to occur. The button sensitivity will return to normal during the next automatic calibration.

You can use the or operating buttons to browse through the menu or select a number or character within a parameter value.
Different functions can be assigned to the and operating buttons. The function that is currently assigned to them is shown on the LCD display.

Control button functions

	Meaning
Exit	Exit menu
Back	Go back one submenu
Cancel	Cancel a parameter entry
Next	Select the next position for entering numerical and alphanumeric values

	Meaning
Select	Select submenu / parameter
Edit	Edit parameter
OK	Save parameter entered

7 ...Operation

Menu levels

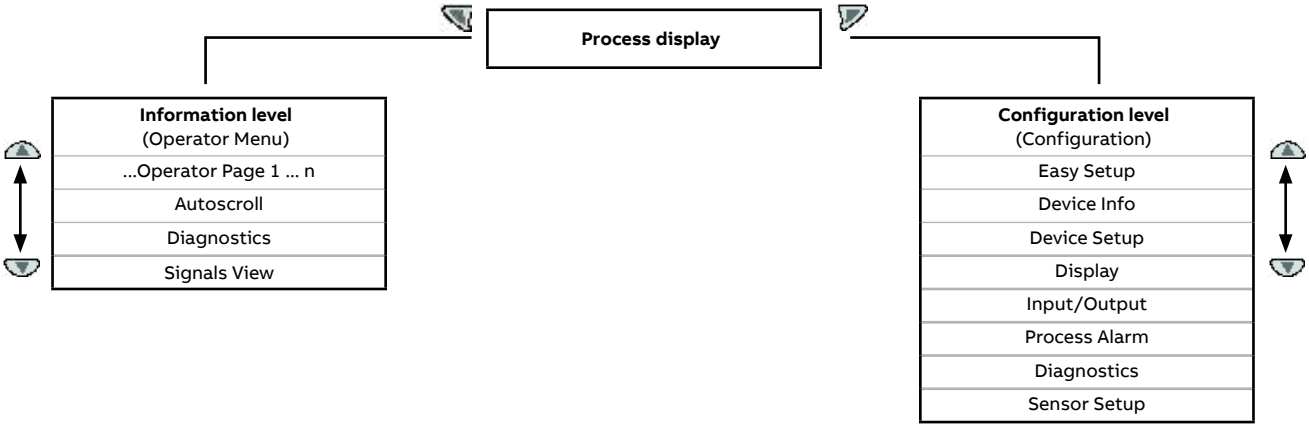

Process display
The process display shows the current process values. There are two menu levels under the process display.

Information level (Operator Menu)
The information level contains the parameters and information that are relevant for the operator.
The device configuration cannot be changed on this level.

Configuration level (Configuration)
The configuration level contains all the parameters required for device commissioning and configuration. The device configuration can be changed on this level. For detailed information on the parameters, see chapter "Parameter descriptions" on page 46.

7 ...Operation

Process display

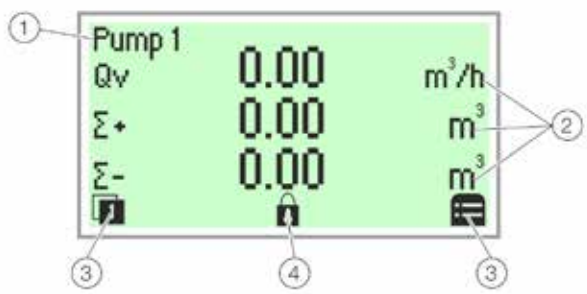

Figure 44 Process display (example)

1. Measuring point tagging
2. Current process values
3. 'Button function' symbol
4. 'Parameterization protected' symbol

The process display appears on the LCD display when the device is switched on. It shows information about the device and current process values.
The way in which the current process values are shown can be adjusted on the configuration level.
The symbols at the bottom of the process display are used to indicate the functions of the operating buttons and , in addition to other information.

Symbol	Description
/	Call up information level. When Autoscroll mode is activated, the icon appears here and the operator pages are automatically displayed one after the other
	Call up configuration level.
	The device is protected against changes in the parametrization.

Switching to the information level (Operator menu)

On the information level, the operator menu can be used to display diagnostic information and choose which operator pages to display.

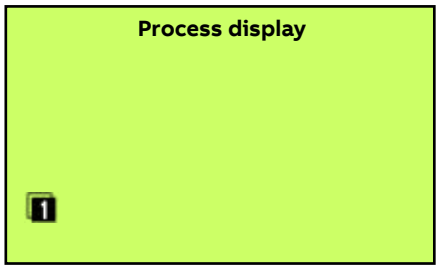

1 Open the Operator Menu using .

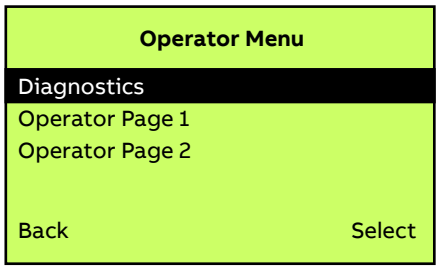

2 Select the desired submenu using / .
3 Confirm the selection with .

Menu	Description
... / Operator Menu	
Diagnostics	Selection of sub-menu "Diagnostics"; see also chapter "Error messages on the LCD display" on page 38.
Operator Page 1... n	Selection of operator page to be displayed.
Autoscroll	When Autoscroll is activated, automatic switching of the operator pages is initiated on the process screen.
Signals View	Selection of submenu "Signals View" (only for service purposes).

7 ...Operation

Error messages on the LCD display

In the event of an error, a message consisting of a symbol and text (e.g. Electronics) appears at the bottom of the process screen.

The text displayed provides information about the area in which the error has occurred.

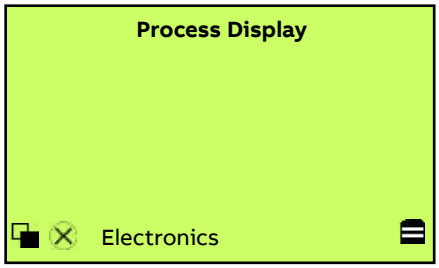

The error messages are divided into four groups in accordance with the NAMUR classification scheme. The group assignment can only be changed using a DTM or EDD:

Symbol	Description
	Error / failure
	Function check
	Outside of the specification
	Maintenance required

The error messages are also divided into the following areas:

Range	Description
Operation	Error / alarm due to the current operating conditions.
Sensor	Error / alarm of the flowmeter sensor.
Electronics	Error / alarm of the electronics.
Configuration	Error / alarm due to device configuration.

Note
For a detailed description of errors and troubleshooting instructions, please see **Diagnosis / error messages** on page 62.

Switching to the configuration level (parameterization)

The device parameters can be displayed and changed on the configuration level.

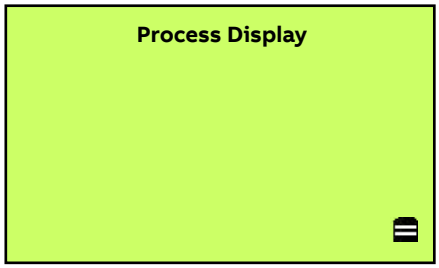

1 Use to switch to the configuration level.

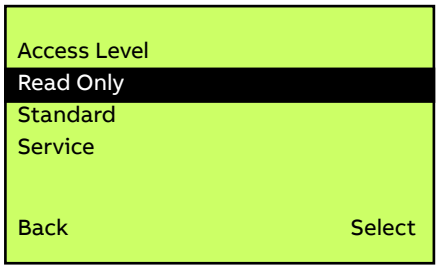

2 Select the desired level of access using /.
3 Confirm the selection with .

Note
There are three levels of access. A password can be defined for level "Standard".
There is no factory default password.

Access Level	Description
Read Only	All parameters are locked. Parameters are read only and cannot be modified.
Standard	All the parameters can be changed.
Service	Only ABB Customer Service has access to the Service menu.

7 ...Operation

...Switching to the configuration level (parameterization)

Once you have logged on to the corresponding access level, you can edit or reset the password. Reset (status 'no password defined') by selecting '▤' as a password.

4 Enter the corresponding password (see page 40). No password is preset in the factory settings. Users can switch to the configuration level without entering a password. The selected access level remains active for 3 minutes. Within this time period you can toggle between the process display and the configuration level without re-entering the password.
5 Use to confirm the password.

The LCD display now indicates the first menu item on the configuration level.

6 Select a menu using /.
7 Confirm the selection with .

Selecting and changing parameters

Entry from table

When an entry is made from a table, a value is selected from a list of parameter values.

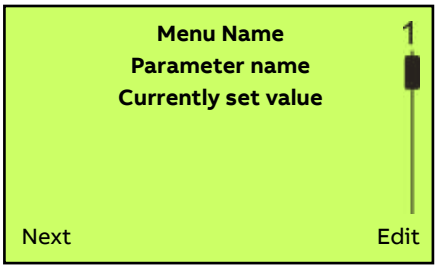

1 Select the parameters you want to set in the menu.
2 Use to call up the list of available parameter values. The parameter value that is currently set is highlighted.

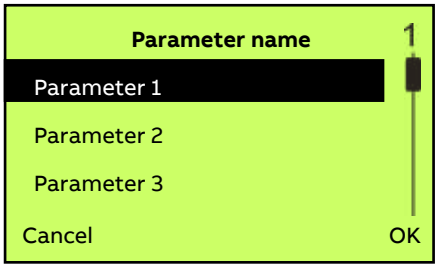

3 Select the desired value using /.
4 Confirm the selection with .

This concludes the procedure for selecting a parameter value.

Numerical entry

When a numerical entry is made, a value is set by entering the individual decimal positions.

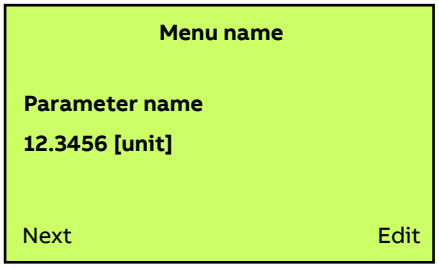

1 Select the parameters you want to set in the menu.
2 Use to call up the parameter for editing. The decimal place that is currently selected is highlighted.

7 ...Operation

...Selecting and changing parameters

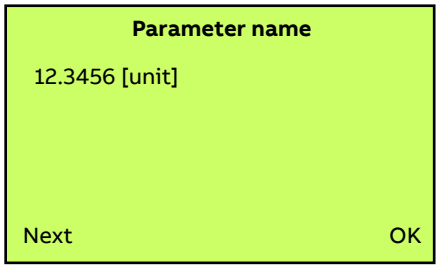

3 Use to select the decimal place to change.
4 Use / to set the desired value.
5 Use to select the next decimal place.
6 If necessary select and set additional decimal places in accordance with steps 3 to 4.
7 Use to confirm your setting.

This concludes the procedure for changing a parameter value.

When an alphanumeric entry is made, a value is set by entering the individual decimal positions.

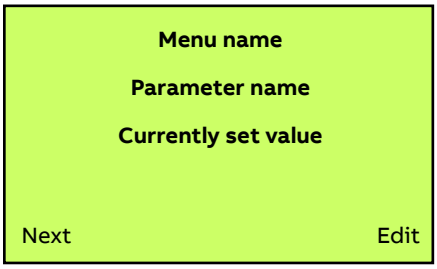

1 Select the parameters you want to set in the menu.
2 Use to call up the parameter for editing. The decimal place that is currently selected is highlighted.

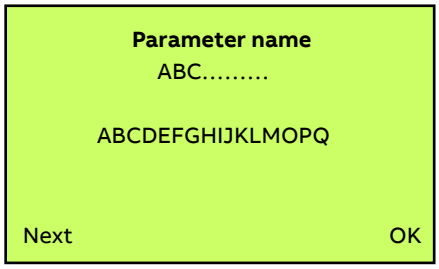

3 Use to select the decimal place to change.
4 Use / to set the desired value.
5 Use to select the next decimal place.
6 If necessary select and set additional decimal places in accordance with steps 3 to 4.
7 Use to confirm your setting.

This concludes the procedure for changing a parameter value.

Exiting the setup

For some menu items, values must be entered. If you don't want to change the parameter, you can exit the menu as described below.

1 Pressing (Next) repeatedly moves the cursor to the right. Once the cursor reaches the end position, 'Cancel' is displayed in the lower right of the screen.
2 terminates editing and exits the menu item. Use to return to the start.

Note

The LCD display automatically returns to the process display three minutes after the last button has been actuated.

7 ...Operation

Parameter overview

Note
This overview of parameters shows all the menus and parameters available on the device. Depending on the version and configuration of the device, not all of the menus and parameters may be visible in it.

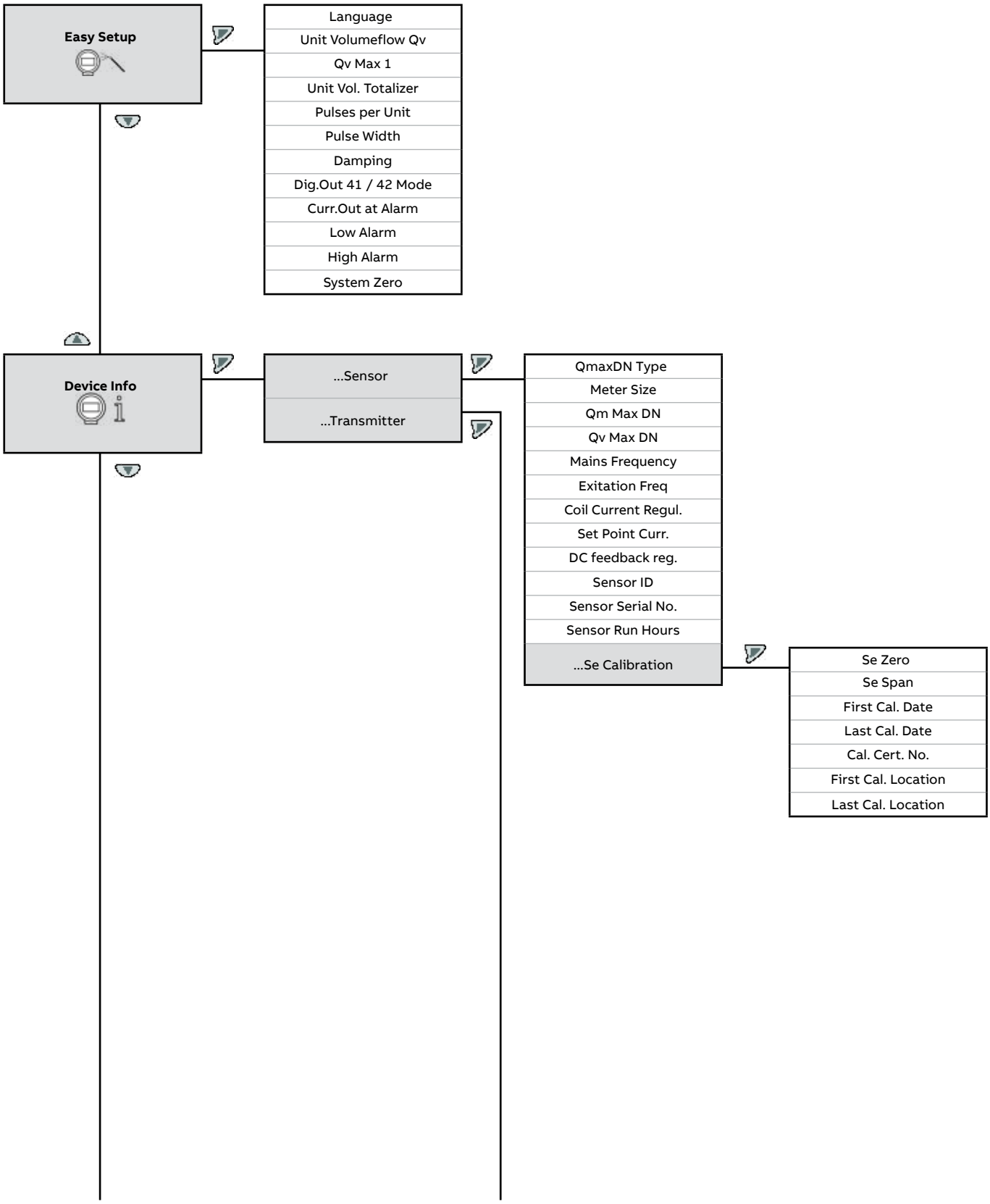

7 ...Operation

...Parameter overview

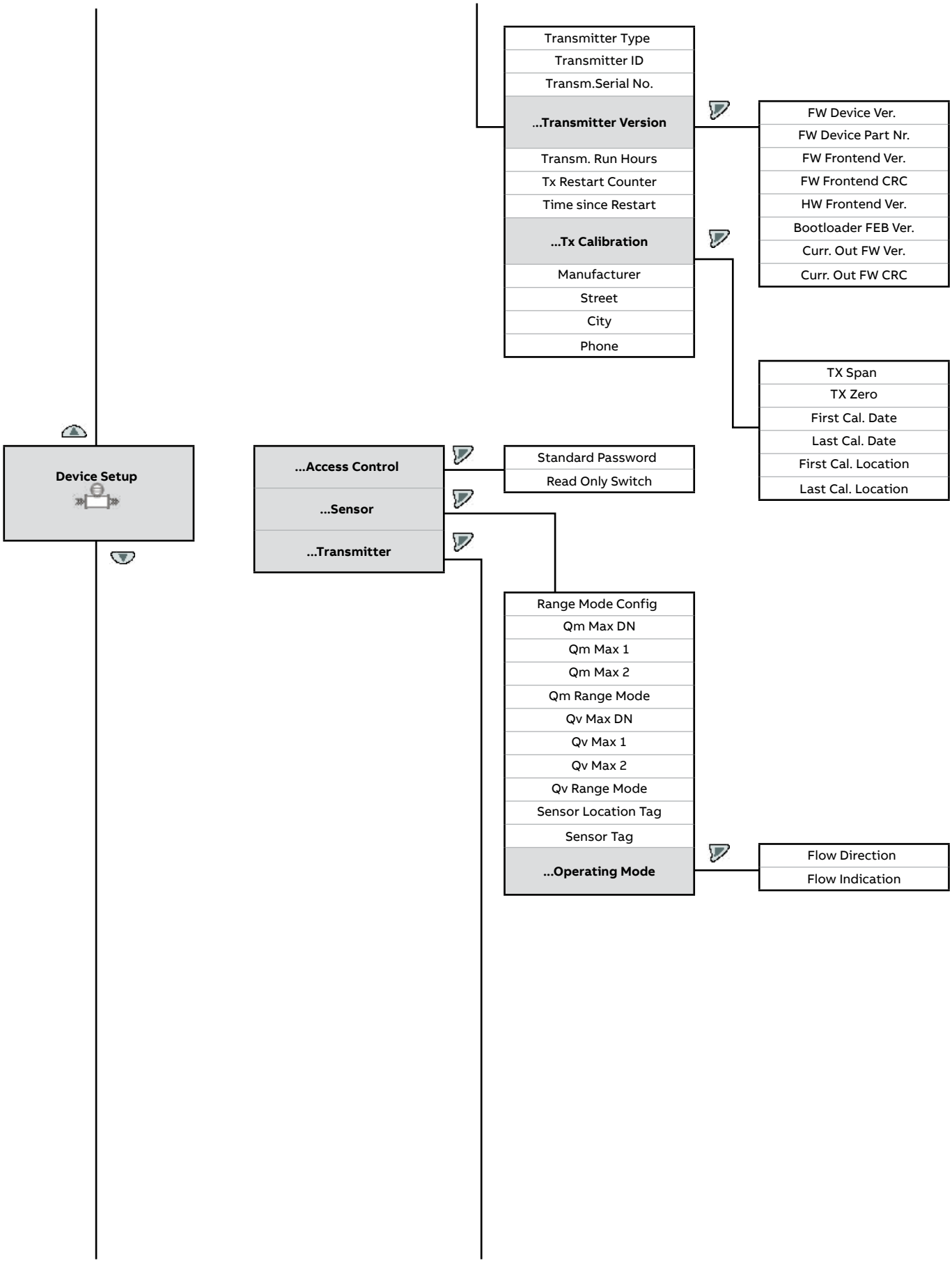

7 ...Operation

...Parameter overview

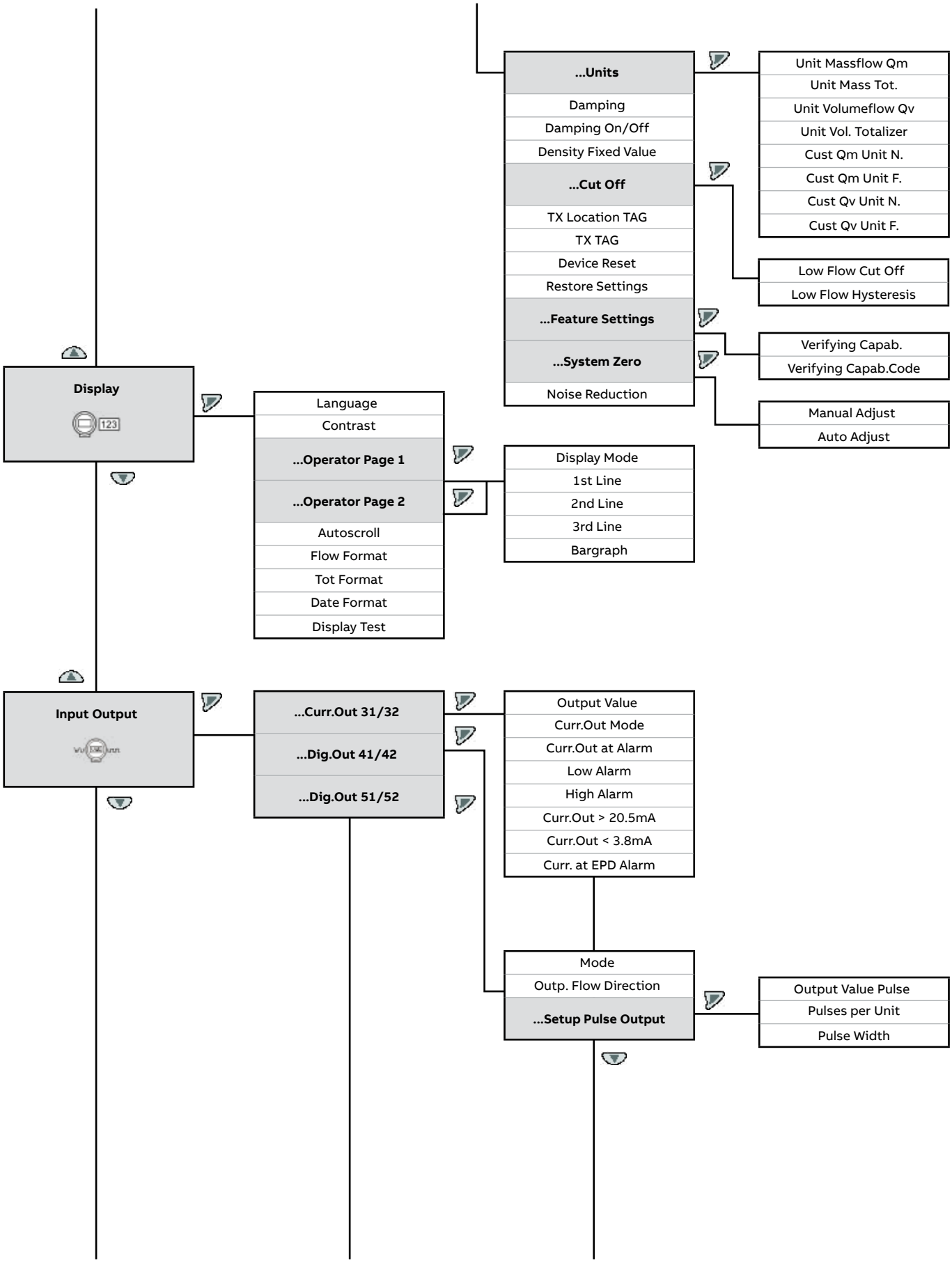

7 ...Operation

...Parameter overview

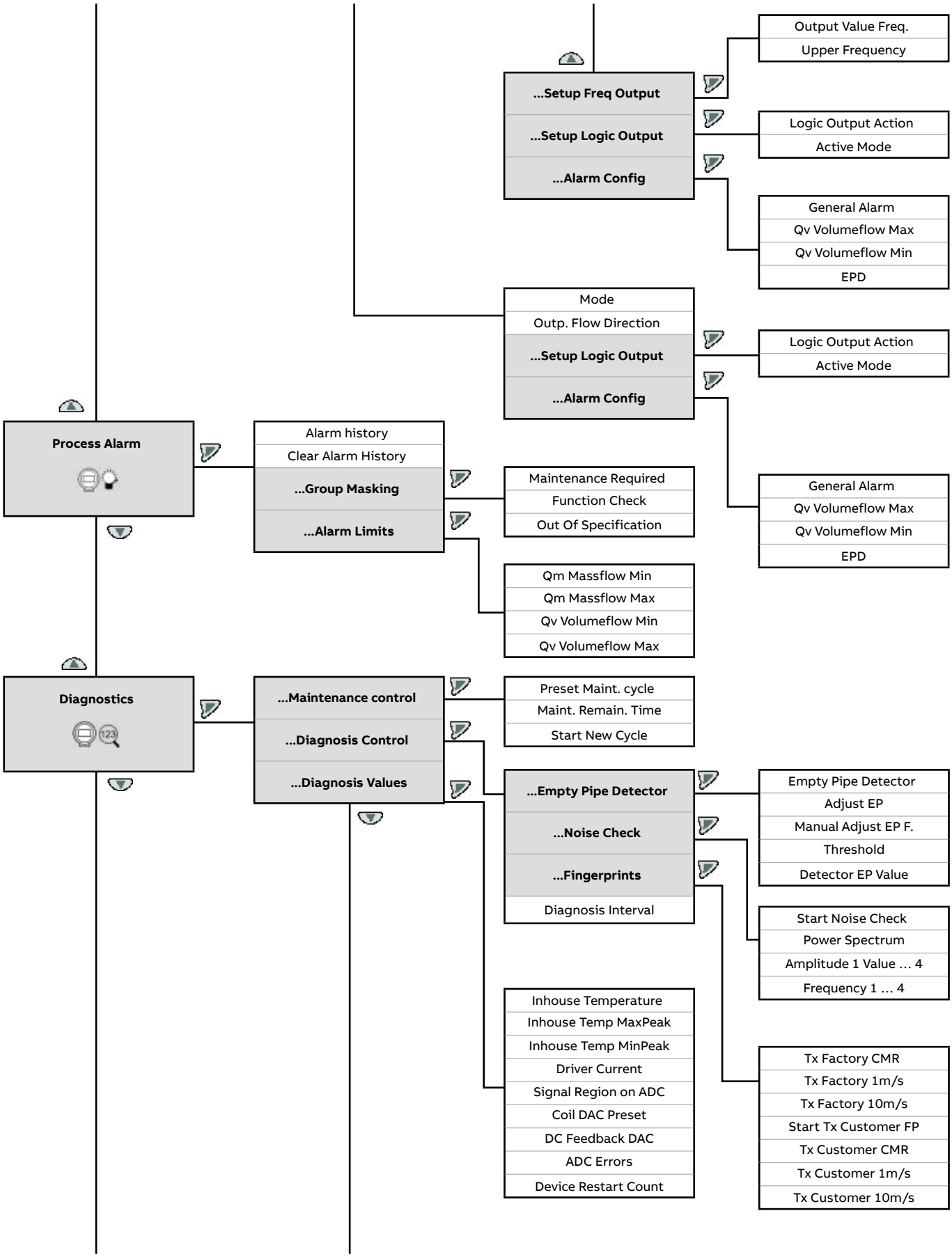

7 ...Operation

...Parameter overview

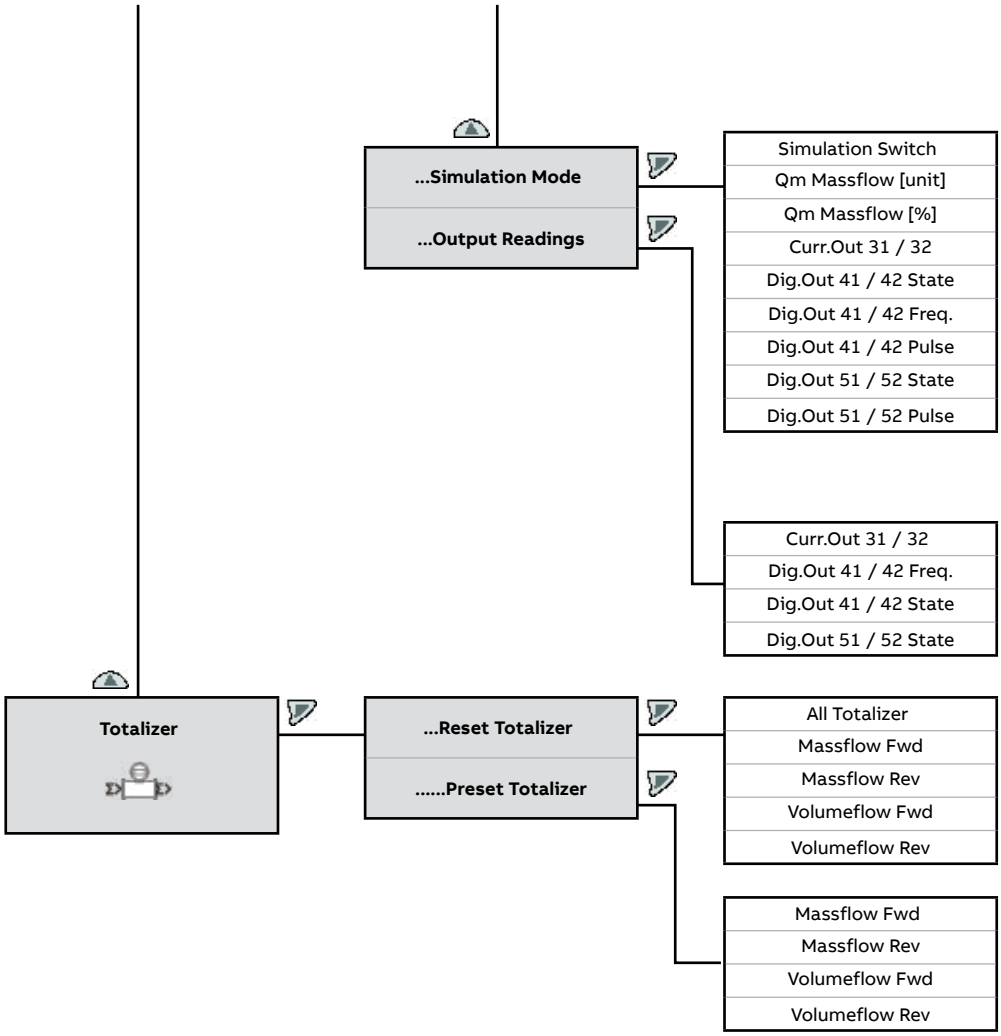

7 ...Operation

Parameter descriptions

Available units

For certain parameters it is possible to choose among the following units.

Note

The 'Code' column indicates the value to which the corresponding parameter must be set, e.g. using the communications interface.

Selection	Code	Description
m3/s	13	Cubic meters per second
m3/min	14	Cubic meters per minute
m3/h	15	Cubic meters per hour
m3/d	16	Cubic meters per day
ft3/s	29	Cubic feet per second
ft3/min	30	Cubic feet per minute
ft3/h	31	Cubic feet per hour
ft3/d	32	Cubic feet per day
ml/s	46	Milliliters per second
ml/min	47	Milliliters per minute
l/s	48	Liters per second
l/min	49	Liters per minute
l/h	50	Liters per hour
l/d	51	Liters per day
hl/h	54	Hectoliters per hour
Ml/d	62	Megaliters per day
ugal/s	71	US gallons per second
ugal/min	72	US gallons per minute
ugal/h	73	US gallons per hour
ugal/d	74	US gallons per day
Mugal/d	82	Mega US gallons per day
igal/s	91	Imperial gallons per second
igal/min	92	Imperial gallons per minute
igal/h	93	Imperial gallons per hour
igal/d	94	Imperial gallons per day
bbl/s	112	Oil barrels per second
bbl/min	113	Oil barrels per minute
bbl/h	114	Oil barrels per hour
bbl/d	115	Oil barrels per day
bls/s	130	Brew barrels per second
bls/min	131	Brew barrels per minute
bls/h	132	Brew barrels per hour
bls/d	133	Brew barrels per day
xx/yy	254	User-defined unit

Table 1 Units for the volume flow

Selection	Code	Description
g/s	1	Grams per second
g/min	2	Grams per minute
g/h	3	Grams per hour
g/d	4	Grams per day
kg/s	5	Kilograms per second
kg/min	6	Kilograms per minute
kg/h	7	Kilograms per hour
kg/d	8	Kilograms per day
lb/s	9	Pounds (avdp) per second
lb/min	10	Pounds (avdp) per minute
lb/h	11	Pounds (avdp) per hour
lb/d	12	Pounds (avdp) per day
t/min	30	Metric tons per minute
t/h	31	Metric tons per hour
t/d	32	Metric tons per day
xx/yy	254	User-definable unit

Table 2 Units for the mass flow

Selection	Code	Description
kg	2	Kilograms
g	3	Grams
t	5	Tons (metric)
Pound	8	Pounds (advp)
xx/yy	254	User-definable unit

Table 3 Units for the mass totalizer

Selection	Code	Description
m3	4	Cubic meters
ft3	7	Cubic feet
ml	11	Milliliters
l	13	Liters
hl	14	Hectoliters
ugal	20	US gallons
igal	21	Imperial gallons
bbl	22	Barrels (petroleum, USA)
bls	31	Barrels (beer, USA)
xx/yy	254	User-definable unit

Table 4 Units for the volume totalizer

7 ...Operation

...Parameter descriptions

Menu: Easy Setup

Menu / parameter	Description
Easy Setup	
Language	Selection of the menu language (German, English, French, Spanish, Italian, Chinese, Portuguese).
Unit Volumeflow Qv	Selection of the unit for the volume flow (e.g. for the parameters QvMax / QvMaxDN and for the corresponding process value). Default setting: ugal/min (US gallon/ min) See Table "Table 1: Units for the volume flow" on page 46.
Qv Max 1	Setting of the upper measuring range value 1 (Measuring range = 0 ... Qv Max 1) for the volume flow for forward flow and reverse flow. Default setting: 1 x QmaxDN
Unit Vol. Totalizer	Selection of the unit for the volume totalizers and the pulse outputs. Default setting: ugal (US gallon) See Table "Available units" on page 46.
Pulses per Unit	Set pulses per volume or per mass flow unit, and the pulse width for the digital output operating mode "Pulse". The pulse factor and pulse width are interdependent and are calculated dynamically (Pulses per unit: 1 ... 10000/s, Pulse width: 0.1 ... 2000 mS). Only available if a digital output has been configured as a pulse output, and the volume flow or mass flow has been selected as the process variable to be output.
Pulse Width	
Damping	Select the damping. The value (0.02 ... 60 s) set here relates to 1 T (Tau). The value refers to the response time for a step flowrate change. It affects the instantaneous value in the display and at the current output. Default setting: 1 second
Dig.Out 41 / 42 Mode	Selection of the operating mode for digital output 41 / 42. Off: Digital output 41 / 42 deactivated. • Logic: Digital output 41 / 42 as a binary output (e.g. as an alarm output). • Pulse: Digital output 41 / 42 as a pulse output. In pulse mode, pulses are output per unit (e.g. 1 pulse per m3). • Frequency: Digital output 41 / 42 as a frequency output. In frequency mode, a frequency is issued that is proportional to the flow rate. The maximum frequency can be configured in accordance with the upper range value. Default setting: Pulse
Upper Frequency	Sets the upper range value frequency for the digital output operating mode "Frequency". The entered value (0 ... 10500 Hz) corresponds to 100 % flow. Only available if a digital output has been configured as a frequency output, and the volume flow or mass flow has been selected as the process variable to be output.
Curr.Out at Alarm	Selection of status of the current output in error condition. The output "Low Alarm" or "High Alarm" current is set in the subsequent menu.
Low Alarm	Sets the current (3.5 ... 3.6 mA) for Low Alarm.
High Alarm	Sets the current (21 ... 22.6 mA) for High Alarm.
System Zero	Starts the automatic zero point balancing using . Automatic zero point balancing takes approx. 60 seconds. **Note** Prior to starting the zero point adjustment, make sure that: • There is no flow through the sensor (close all valves, shut-off devices etc.) • The sensor must be filled completely with measuring medium for measurement.

7 ...Operation

...Parameter descriptions

Menu: Device Info

This menu is only used to display the device parameters. The parameters are displayed independently of the configured access level, but cannot be changed.

Menu / parameter	Description
Device Info	
...Sensor	Selection of submenu '...**Sensor**' using .
...Transmitter	Selection of submenu '...**Transmitter**' using .

Device Info / ...Sensor	
QmaxDN Type	For informational purposes only.
Meter Size	Nominal diameter of sensor.
Qm Max DN	The value specifies the maximum massflow rate a flow velocity of 32.8 ft/s (10 m/s). The value is set automatically via the selected nominal size multiplied with the density set.
Qv Max DN	The value specifies the maximum volume flowrate rate a flow velocity of 32.8 ft/s (10 m/s). The value is set automatically via the selected nominal size.
Mains Frequency	Mains frequency for the supply power.
Exitation Freq	Frequency used to operate the magnet coils of the flowmeter sensor.
Coil Current Regul.	For service information purposes only.
Set Point Curr.	Current used to operate the magnet coils of the flowmeter sensor.
DC feedback reg.	For service information purposes only.
Sensor ID	ID number of the sensor.
Sensor Serial No.	Serial number of the sensor.
Sensor Run Hours	Operating hours of the sensor.
...Se Calibration	Selection of submenu '...**Se Calibration**' using .

Device Info / ...Sensor / ...Se Calibration	
Se Span	Calibration value in the forward flow and reverse flow direction of the sensor.
Se Zero	
First Cal. Date	Date of first calibration of sensor (calibration of new device).
Last Cal. Date	Date of last calibration of sensor.
Cal. Cert. No.	Identification (number) of the relevant calibration certificate.
First Cal. Location	Place of first calibration of the sensor.
Last Cal. Location	Place of last calibration of sensor.

7 ...Operation

...Parameter descriptions

...Menu: Device Info

Menu / parameter	
Device Info / ...Transmitter	
Transmitter Type	Type of transmitter, e. g. FEx610.
Transmitter ID	ID number of transmitter.
Transm.Serial No.	Serial number of transmitter.
...Transmitter Version	Selection of submenu '...**Transmitter Version**' using .
Transm. Run Hours	Run hours of the transmitter.
Tx Restart Counter	Number of device restarts (cyclings of the power supply off and on).
Time since Restart	Device operating hours since the last restart.
...Tx Calibration	Selection of submenu '...**Tx Calibration**' using .
Manufacturer	Name of manufacturer.
Street	Manufacturer's address (street).
City	Manufacturer's address (city).
Phone	Manufacturer's address (phone number).

Device Info / ...Transmitter / ...Transmitter Version	
FW Device Ver.	Version and item number of device software package.
FW Device Part Nr.	
FW Frontend Ver.	Version and checksum (CRC) of frontend board (FEB) software.
FW Frontend CRC	
HW Frontend Ver.	Hardware version of frontend board (FEB).
Bootloader FEB Ver.	Version of frontend board (FEB) bootloader.
Curr. Out FW Ver.	Current output module software version and checksum (CRC).
Curr. Out FW CRC	

Device Info / ...Transmitter / ...Tx Calibration	
TX Span	Calibration value of the transmitter.
TX Zero	
First Cal. Date	Date of first calibration of transmitter (calibration of new device).
Last Cal. Date	Date of last calibration of transmitter.
Cal. Cert. No.	Identification (number) of the relevant calibration certificate.
First Cal. Location	Place of first calibration of transmitter.
Last Cal. Location	Place of last calibration of transmitter.

7 ...Operation

...Parameter descriptions

Menu: Device setup

Menu / parameter	
Device Setup	
...Access Control	Selection of submenu '...**Access Control**' using .
...Sensor	Selection of submenu '...**Sensor**' using .
...Transmitter	Selection of submenu '...**Transmitter**' using .

Device Setup / ...Access Control	
Standard Password	Entry / change of the password for the 'Standard' access level.
Read Only Switch	Indicator of the position of the write protection switch. For further information, see chapter "Write protection switch" on page 27.

Device Setup / ...Sensor	
Range Mode Config	Activation of the second measuring range for the mass and volume flow. The setting can be performed separately for the mass flow rate (Qm) and volume flow (Qv). This means that it is possible to switch quickly between two measuring ranges (e.g. Qm Max and Qm Max2). Switching is performed via the parameters "Qm Range Mode", "Qv Range Mode". • Disabled: Second measuring range for mass and volume flow rate deactivated. • Qm and Qv: Second measuring range for mass and volume flow rate activated. • Qm only: Second measuring range for mass flow activated. • Qv only: Second measuring range for volume flow activated. Default setting: Disabled
Qm Max DN	The value specifies the lower massflow rate a flow velocity of 32.8 ft/s (10 m/s). The value is set automatically via the selected nominal size multiplied with the density set.
Qm Max 1	Setting of the upper measuring range value 1 (Measuring range = 0 ... Qm Max 1) for the mass flow for forward flow and reverse flow. Default setting: 1 x QmaxDN
Qm Max 2	Setting of the upper measuring range value 2 (Measuring range = 0 ... Qm Max 2) for the mass flow for forward flow and reverse flow. This parameter is only available if the value "Max2 active" has been selected for the parameter "Qm Range Mode".
Qm Range Mode	Manual switchover between the measuring ranges (Max1 active / Max2 active) for the mass flow measurement. This parameter is only available if the value Qm only or Qm and Qv has been selected for the parameter "Range Mode Config".
Qv Max DN	The value specifies the lower volume flowrate rate a flow velocity of 32.8 ft/s (10 m/s). The value is set automatically via the selected nominal size.
Qv Max 1	Setting of the upper measuring range value 1 (Measuring range = 0 ... Qv Max 1) for the volume flow for forward flow and reverse flow. Default setting: 1 x QmaxDN
Qv Max 2	Setting of the upper measuring range value 2 (Measuring range = 0 ... Qv Max 2) for the volume flow for forward flow and reverse flow. This parameter is only available if the value "Max2 active" has been selected for the parameter "Qv Range Mode". Default setting: 1 x QmaxDN
Qv Range Mode	Manual switchover between the measuring ranges (Max1 active / Max2 active) for the volume flow measurement. This parameter is only available if the value Qv only or Qm and Qv has been selected for the parameter Range Mode Config".
Sensor Location Tag	Entry of the measuring point tag for the sensor. Alphanumeric, max. 20 characters
Sensor Tag	Entry of the TAG number of the sensor. Alphanumeric, max. 20 characters.
...Operating Mode	Selection of submenu '...**Operating Mode**' using .

7 ...Operation

...Parameter descriptions

Menu: Device setup

Menu / parameter	
Device Setup / ...Sensor / ...Operating Mode	
Flow Direction	Sets the measuring direction for the sensor. As delivered, the device measures and counts in both flow directions. • Forward & Reverse: The device measures in both flow directions. • Forward only: The device measures only in the forward flow direction. • Reverse only: The device measures only in the reverse flow direction. Default setting: Forward & Reverse
Flow Indication	Inverts the flow direction displayed. Default setting: Normal

Device Setup / ...Transmitter	
...Units	Selection of submenu '...**Units**' using .
Damping	Select the damping. The value (0.02 ... 60 s) set here relates to 1 T (Tau). The value refers to the response time for a step flowrate change. It affects the instantaneous value in the display and at the current output. Default setting: 1 second
Damping On/Off	Switches the damping on or off.
Density Fixed Value	If the flow is measured and indicated in mass flow units, a fixed density must be taken into account for the calculations. To convert the flow rate to mass flow units, a density value from 0.01 ... 5.0 g/cm3 can be entered.
...Cut Off	Selection of submenu '...**Cut Off**' using .
TX Location TAG	Entry of the measuring point tag for the transmitter. Alphanumeric, max. 20 characters
TX TAG	Enter the tag number for the transmitter. Alphanumeric, max. 20 characters
Plant Data Sync.	Tx -> Sens The settings are redundantly saved in two data modules. One of them is the SensorMemory, the other is the transmitter motherboard (backplane). By selecting 'Tx -> Sens', location-specific settings such as measuring range or damping are replicated from the transmitter motherboard (backplane) to the SensorMemory. Sens -> Tx By selecting 'Sens -> Tx', location-specific settings such as measuring range or damping are replicated from the SensorMemory to the transmitter motherboard (backplane).
Device Reset	For service purposes only. Restarts the device without the need for cycling the power.
Restore Factory Def.	All user-accessible parameters will be reset to the factory default settings.
...Feature Settings	Selection of submenu '...**Feature Settings**' using .
...System Zero	Selection of submenu '...**System Zero**' using .
Noise Reduction	Activates the filter technology for noise reduction. Filter: Off, Filter 15, 30, 60 (15: lower filtering, 60: strong filtering) Filter setting affects 20 mA signal (damping). Default setting: Off

7 ...Operation

...Parameter descriptions

Menu: Device setup

Menu / parameter	
Device Setup / ...Transmitter / ...Units	
Unit Massflow Qm	Selection of unit for mass flow. Refer to "Available units" on page 46. The selection applies to the display of the current mass flow, and for the parameters related to mass flow such as QmMax and QmMaxDN.
Unit Mass Tot.	Selection of unit for the mass totalizer. Refer to "Table 3: Units for the mass totalizer" on page 46.
Unit Volumeflow Qv	Selection of unit for volume flow. Refer to "Table 1: Units for the volume flow" on page 46. The selection applies to the display of the current volume flow and for the parameters related to volume flow such as QvMax and QvMaxDN.
Unit Vol. Totalizer	Selection of unit for the volume totalizers. Refer to "Table 4: Units for the volume totalizer" on page 46.
Cust Qm Tot Unit F.	Enter the factor for a user-defined massflow unit. The factor relates to the flow per liter.
Cust Qm Tot Unit N.	Enter the name for the user-defined massflow unit.
Cust Qv Tot Unit F.	Enter the factor for a user-defined volumeflow unit. The factor relates to the flow per liter.
Cust Qv Unit N.	Enter the name for the user-defined volumeflow unit.

Device Setup / ...Transmitter / ...Cut Off	
Low Flow Cut Off	Sets the switching threshold (0 ... 10 %) for the low flow cut-off. If the flow rate is below the switching threshold, there is no flow measurement. The setting of 0 % deactivates the low flow cut-off. Default setting: 1.0 %
Low Flow Hysteresis	Sets the hysteresis (0 ... 50 %) for the low flow cut-off as it is defined in the parameter "Low Flow Cut Off". Default setting: 20 %

Device Setup / ...Transmitter / ...Feature Settings	
Verifying Capab.	Indicates whether the Verification function is enabled.
Verifying Capab.Code	Sets the device-specific code for activating the Verification function. To use this function subsequently, contact the ABB service team or sales organization. After entering the code, restart the device (e.g. using the parameter "Device Reset" or by briefly switching off the power supply).

Device Setup / ...System Zero	
Manual Adjust	Sets the value for zero point adjustment in % of QmaxDN. Manual Adjust: -50 ... +50 mm/s
Auto Adjust	Starts the automatic zero point adjustment using . Automatic zero point adjustment takes approx. 60 seconds. **Note** Prior to starting the zero point adjustment, make sure that: • There is no flow through the sensor (close valves, shut-off devices etc.). • The sensor must be filled completely with measuring medium for measurement.

7 ...Operation

...Parameter descriptions

Menu: Display

Menu / parameter	Description
Display	
Language	Selection of menu language. (German, English, French, Spanish, Italian, Chinese, Portuguese).
Contrast	Contrast setting for the LCD display.
...Operator Page 1	Selection of submenu '...**Operator Page 1**' using .
...Operator Page 2	Selection of submenu '...**Operator Page 2**' using .
Autoscroll	If Autoscroll is enabled, the "Autoscroll" function can also be activated on the information level of the operator menu. In this function, operator pages are automatically displayed in succession on the process screen, changing every 10 seconds. Manual scrolling through pre-configured operator pages as described above is no longer necessary. When Autoscroll mode is enabled, the icon is displayed on the lower left of the screen. Default setting: Disabled.
Flow Format	Selection of number of decimal places (maximum 6) used to display the corresponding process variables. Default setting: X.XX.
Tot Format	
Date Format	Set the display format for the date. Default setting: YYYY.MM.DD
Display Test	Start the test of the LCD display with ' '. The display test lasts approx. 10 seconds. Various patterns are shown on the LCD display to check the display.

Display / ...Operator Page 1 (n)	Description
Display Mode	Configure each operator page. The following variants can be selected: Off, Graph View, 1x4, 1x6A, 1x6A bar, 1x9, 1x9 bar, 2x9, 2x9 bar, 3x9. Selecting "Off" deactivates the corresponding operator page.
1st Line	Selection of process variable displayed in the respective row. • Qv [unit]: Volume flow in the selected unit • Qv [%]: Volume flow in %. • ∑V+: Volume totalizer forward flow • ∑V-: Volume totalizer reverse flow • ∑Vn: Volume totalizer net • CO1 Current: Current output in mA • Qm [unit]: Mass flow in the selected unit • Qm [%]: Mass flow in %. • ∑M+: Mass totalizer forward flow • ∑M-: Mass totalizer reverse flow • ∑Mn: Mass totalizer net • scaled velocity: Flow velocity
2nd Line	
3rd Line	
Bargraph	Selection of process variable displayed as a bar graph. • Qm [%]: Mass flow in % • Qv [%]: Volume flow in % • CO1 Current: Current output in mA

7 ...Operation

...Parameter descriptions

Menu: Input/output

Menu / parameter	Description
Input/Output	
...Curr.Out 31/32	Selection of submenu '...Curr.Out 31/32' using .
...Dig.Out 41/42	Selection of submenu '...Dig.Out 41/42' using .
...Dig.Out 51/52	Selection of submenu '...Dig.Out 51/52' using .

Input/Output / ...Curr.Out 31/32	
Output Value	Selection of process variable issued at the current output. • Qm [%]: mass flow • Qv [%]: volume flow
Curr.Out Mode	• Selection of operating mode for the current output. • '4-20mA FWD' Flow output in forward flow direction: 4 mA = no flow 20 mA = maximum flow • '4-12-20 mA': Flow output in forward and reverse flow direction: 4 mA = maximum flow in reverse flow 12 mA = no flow 20 mA = maximum flow in forward flow • '4-20mA FWD/REV': Flow output in forward and reverse flow direction without distinguishing between flow directions: 4 mA = no flow 20 mA = maximum flow Default setting: 4-20mA FWD/REV.
Curr.Out at Alarm	Selection of status of the current output in error condition. The output 'low alarm' or 'highalarm' current is set in the subsequent menu. Default setting: High Alarm.
Low Alarm	Sets the current for Low Alarm (3.5...3.6mA). Default setting: 3.5 mA
High Alarm	Sets the current for High Alarm (21...22.6mA). Default setting: 21.8 mA
Curr.Out > 20.5mA	Behavior of the current output if 20.5 mA is exceeded. • Hold Last Value: The last measured value is retained and issued. • High Alarm: The high alarm current is issued. • Low Alarm: The low alarm current is issued. Default setting: Hold Last Value
Curr.Out < 3.8mA	Behavior of the current output if 3.8 mA is not reached. • Hold Last Value: The last measured value is retained and issued. • High Alarm: The high alarm current is issued. • Low Alarm: The low alarm current is issued. Default setting: Low Alarm
Curr. at EPD Alarm	Behavior of the current output during empty meter tube conditions. • Off: No effect on current output. • Q=0%: Current output is set to 4mA which is "no flow". • Hold Last Value: The last measured value is retained and issued. • High Alarm: The high alarm current is issued. • Low Alarm: The low alarm current is issued. Default setting: Off

7 ...Operation

...Parameter descriptions

...Menu: Input/output

Menu / parameter	Description
Input/Output / ...Dig.Out 41/42	
Mode	Selection of the operating mode for the digital output 41 / 42. • Off: Digital output 41 / 42 deactivated. • Logic: Digital output 41 / 42 as a binary output (e.g. as an alarm output). • Pulse: Digital output 41 / 42 as a pulse output. In pulse mode, pulses are output per unit (e.g. 1 pulse per m3). • Frequency: Digital output 41 / 42 as a frequency output. In frequency mode, a frequency is issued that is proportional to the flow rate. The maximum frequency can be configured in accordance with the upper range value. Default setting: Pulse
Outp. Flow Direction	Selection of flow direction in which the pulse / frequency output issues the selected process value. The parameter is only available if the digital output has been configured as a pulse or frequency output. • Forward & Reverse: Pulses for both flow directions are output via digital output 41 / 42. • Forward: Only pulses in the forward direction (flow in direction of arrow) are output via digital output 41 / 42. • Reverse: Only pulses in the reverse direction (flow in opposite direction to arrow) are output via digital output 41 / 42. Default setting: Forward & Reverse.
...Setup Pulse Output	Selection of submenu '...**Setup Pulse Output**' using . Only available if 'ModePulse' has been selected.
...Setup Freq Output	Selection of submenu '...**Setup Freq Output**' using . Only available if 'ModeFrequency' has been selected.
...Setup Logic Output	Selection of submenu '...**Setup Logic Output**' using . Only available if 'ModeLogic' has been selected.
...Alarm Config	Selection of submenu '...**Alarm Config**' using . Only available when Logic is selected in "Mode" and Alarm Signal is selected from the "...Setup Logic Output / Logic Output Action" menu.

Input/Output / ...Dig.Out 41/42 / ...Setup Pulse Output	
Output Value Pulse	Selection of process variable that is issued via the pulse output. • Off: The pulse output is deactivated. • Pulse Mass Flow: The pulse output indicates the mass flow. • Pulse Volume Flow: The pulse output indicates the volume flow.
Pulses per Unit	Set pulses per volume or per mass flow unit, and the pulse width for the digital output operating mode "Pulse". The pulse factor and pulse width are interdependent and are calculated dynamically (Pulses per unit: 1 ... 10000/s, Pulse width: 0.1 ... 2000 mS). Only available if a digital output has been configured as a pulse output, and the volume flow or mass flow has been selected as the process variable to be output.
Pulse Width	

Input/Output / ...Dig.Out 41/42 / ...Setup Freq Output	
Output Value Freq.	Selection of process variable that is issued via the frequency output. • Off: The frequency output is deactivated. • Pulse Mass Flow: The frequency output indicates mass flow. • Pulse Volume Flow: The frequency output indicates volume flow.
Upper Frequency	Set the frequency for the upper range value. The entered value (0 ... 10500 Hz) corresponds to 100 % flow.

7 ...Operation

...Parameter descriptions

...Menu: Input/output

Menu / parameter	Description
Input/Output / ...Dig.Out 41/42 / ...Setup Logic Output	
Logic Output Action	Selection of binary output function. • Off: The binary output is deactivated. • F/R Signal: The binary output indicates the flow direction. • Alarm Signal: The binary output indicates an active alarm. The alarm is selected in the "...Alarm Config" menu. • Dual Range: The binary output is activated when measuring range 2 (Qm Max 2 / Qv Max 2) is selected. This selection is only available if the parameter "Dual Range" has been configured to Qm or Qv.
Active Mode	Select switching properties for the binary output. • Active High: Normally open • Active Low: Normally closed Default setting: Active High.

Input/Output / ...Dig.Out 41/42 / ...Alarm Config	
General Alarm	Select error messages signaled via the binary output 41 / 42. Only if the parameter "Logic Output Action" is set to Alarm Signal. Default setting: Off.
Qv Volumeflow Max	
Qv Volumeflow Min	
EPD	

Input/Output / ...Dig.Out 51/52	
Mode	Selection of the operating mode for digital output 51 / 52. The "Follow DO 41 / 42, 90° Shift, 180° Shift" operating modes are only available if digital output 51 / 52 has been configured as a pulse output. • Off: Digital output deactivated. • Logic: Digital output functions as binary output (for function see parameter „...Setup Logic Output"). • Follow DO 41 / 42: Digital output 51 / 52 operates according to the pulses from digital output 41 / 42. The function depends on the setting for the parameter "Outp. Flow Direction". • 90° Shift: 90° phase-shifted output of the same pulses as for digital output 41 / 42. • 180° Shift: 180° phase-shifted output of the same pulses as for digital output 41 / 42. Default setting: Logic.
Outp. Flow Direction	Selection of flow direction in which the pulse / frequency output issues the selected process value. The parameter is only available if Follow DO 41 / 42 has been configured for digital output 51 / 52 in parameter "Mode". • No pulses are issued if "Forward & Reverse" is selected. Only digital output 41 / 42 is active. • When "Forward" is selected, pulses for forward flow are issued at digital output 41 / 42 and pulses for reverse flow at digital output 51 / 52. • When "Reverse" is selected, pulses for reverse flow are issued at digital output 41 / 42 and pulses for forward flow at digital output 51 / 52.
...Setup Logic Output	Selection of submenu '...**Setup Logic Output'** using . Only available if 'ModeLogic' has been selected.
...Alarm Config	Selection of submenu '...**Alarm Config'** using . Only available if 'ModeLogic' has been selected.

7 ...Operation

...Parameter descriptions

...Menu: Input/output

Menu / parameter	Description
Input/Output / ...Dig.Out 51/52 / ...Setup Logic Output	
Logic Output Action	Selection of binary output function. See description '„Input/Output / ...Dig.Out 41/42 / ...Setup Logic Output'.
Active Mode	Select switching properties for the binary output. • Active High: Normally open. • Active Low: Normally closed.

Input/Output / ...Dig.Out 51/52 / ...Alarm Config	
General Alarm	Select error messages signaled via the binary output 51 / 52. Only if the parameter "Logic Output Action" is set to Alarm Signal. Default setting: Off.
Qv Volumeflow Max	
Qv Volumeflow Min	
EPD	

Menu: Process Alarm

Menu / parameter	Description
Process Alarm	
Alarm history	Display of the alarm history
Clear Alarm History	Reset of the alarm history.
...Group Masking	Selection of submenu '...**Group Masking**' using .
...Alarm Limits	Selection of submenu '...**Alarm Limits**' using .

Process Alarm / ...Group Masking	
Maintenance Required	Alarm messages are divided into groups. If masking is activated for a group (On), no alarm is issued. For further information, see chapter "Diagnosis / error messages" on page 62.
Function Check	
Out Of Specification	

Process Alarm / ...Alarm Limits	
Qm Massflow Min	Sets the minimum / maximum limit value (0 ... 110 %) for mass measurement. If the process value "Qm [unit]" exceeds or falls below the limit value, an alarm is triggered.
Qm Massflow Max	
Qv Volumeflow Min	Sets the minimum / maximum limit value (0 ... 110 %) for volume measurement. If the process value "Qv [unit]" exceeds or falls below the limit value, an alarm is triggered.
Qv Volumeflow Max	

7 ...Operation

...Parameter descriptions

Menu: Diagnostics

Menu / parameter	Description
Diagnostics	
...Maintenance control	Selection of submenu '...**Maintenance control'** using .
...Diagnosis Control	Selection of submenu '...**Diagnosis Control**' using .
...Diagnosis Values	Selection of submenu '...**Diagnosis Values**' using .
.....Simulation Mode	Selection of submenu '.....**Simulation Mode**' using .
...Output Readings	Selection of submenu '...**Output Readings**' using .

Diagnostics / ...Maintenance control	
Preset Maint. cycle	Sets the service interval (0 ... 9999 hours). After the service interval has expired, the corresponding error message "Maintenance interval is reached. Perform maintenance." is set. The setting "0" deactivates the maintenance interval.
Maint. Remain. Time	Time remaining in the maintenance interval until the error message "Maintenance interval is reached. Perform maintenance." is set.
Start New Cycle	Resetting of the maintenance interval. The service interval is reset to the value set in 'Preset Maint. cycle'.

Diagnostics / ...Diagnosis Control	**Description**
...Empty Pipe Detector	Selection of submenu '...**Empty Pipe Detector**' using .
...Noise Check	Selection of submenu '...**Noise Check**' using .
...Fingerprints	Selection of submenu '...**Fingerprints**' using .
Diagnosis Interval	Sets the time span between performing the individual diagnostic. The "Empty Pipe Detector" function will be performed in the selected time span (e. g. every 5 seconds). Default setting: 5s.

Diagnostics / ...Diagnosis Control / ...Empty Pipe Detector	
Empty Pipe Detector	Activate the "Empty Pipe Detector" function (only for sizes ≥ DN 10). An entirely full measuring tube is essential for an accurate measurement. The "Empty Pipe Detector" function detects an empty measuring pipe. In the case of an alarm, the current output assumes the status that was defined in the "Input/Output / ...Curr. Out 31 / 32 / Curr. at EPD Alarm" menu, and the pulse output is stopped.
Adjust EP	The Empty Pipe Detector function must be adjusted according to the conditions on site. The switching threshold is set during the automatic adjustment. Start automatic adjustment of the Empty Pipe Detector function.
Manual Adjust EP F.	Manually adjust the Empty Pipe Detector function. The value must be modified in such a way that the frequency for empty pipe detection (Detector EP Value) is close to 2000 Hz. **Note** Prior to starting the (manual / automatic) adjustment, make sure that: • There is no flow through the flowmeter sensor (close all valves, shut-off devices, etc.) • The flowmeter sensor is completely filled with the fluid to be measured.
Threshold	Set the switching threshold for empty pipe detection. The switching threshold is set automatically during automatic adjustment. The switching threshold can be changed in order to obtain manual fine adjustment.
Detector EP Value	Display of the frequency for empty pipe detection. If the current value exceeds the defined switching threshold, a message appears on the display and an alarm is output via the digital output, if configured accordingly.

7 ...Operation

...Parameter descriptions

...Menu: Diagnostics

Menu / parameter	Description
Diagnostics / ...Diagnosis Control / ...Noise Check	
Start Noise Check	Start the '**Noise Check**' function, using .
Power Spectrum	Current power spectrum.
Amplitude 1 Value	Display the four highest amplitudes in the power spectrum.
Amplitude 2 Value	
Amplitude 3 Value	
Amplitude 4 Value	
Frequency 1	Display the corresponding frequency to those four highest amplitudes in the power spectrum.
Frequency 2	
Frequency 3	
Frequency 4	

Diagnostics / ...Diagnosis Control / ...Fingerprints	
Tx Factory CMR	The "fingerprint" database allows to compare the values at the time of factory calibration with the currently recorded values. Errors in the integrity of the "Tx Factory 1m/s" device can be detected at an early stage. Corrective actions can be taken.
Tx Factory 1m/s	
Tx Factory 10m/s	
Start Tx Customer FP	Create the manual fingerprint for the transmitter using .
Tx Customer CMR	The manual fingerprint is created on site prior to verification of the transmitter. Use the parameter "Start Tx Customer FP" to create the the manual fingerprint.
Tx Customer 1m/s	
Tx Customer 10m/s	

7 ...Operation

...Parameter descriptions

...Menu: Diagnostics

Menu / parameter	Description
Diagnostics / ...Diagnosis Values	
All values in this menu are for informational and service purposes only.	
Inhouse Temperature	Indicates temperature inside the Transmitter housing.
Inhouse Temp MaxPeak	
Inhouse Temp MinPeak	
Driver Current	Indicates Sensor Coil drive current.
Signal Region on ADC	Indicates the measuring signal within the AD-converter Input. (-100% .... +100%)
Coil DAC Preset	Indicates DA-converter for coil drive.
DC Feedback DAC	DA-converter feedback value.
ADC Errors	AD-converter errors.
Device Restart Count	Numbers of device restarts (Boots).

Diagnostics / .....Simulation Mode	
Simulation Switch	Manual simulation of measured values. After selecting the value to be simulated, a corresponding parameter is displayed in the menu "Diagnostics / .....Simulation Mode". The simulation value can be set here. The output values correspond to the simulated measured value entered. The "Configuration" information is displayed in the lower line of the display. Only one measured value / output can be selected for simulation. After power-up / restart of the device, the simulation is switched off.
Off	
Qm Massflow [unit]	
Qm Massflow [%]	
Qv Volumeflow [unit]	
Qv Volumeflow [%]	
Curr.Out 31 / 32	
Dig.Out 41 / 42 State	
Dig.Out 41 / 42 Pulse	
Dig.Out 41 / 42 Freq.	
Dig.Out 51 / 52 State	
Dig.Out 51 / 52 Pulse	

Diagnostics / ...Output Readings	
Curr.Out 31 / 32	Display the current values and statuses of the listed inputs and outputs
Dig.Out 41 / 42 Freq.	
Dig.Out 41 / 42 State	
Dig.Out 51 / 52 State	

7 ...Operation

...Parameter descriptions

Menu: Totalizer

Menu / parameter	Description
Totalizer	
...Reset Totalizer	Selection of submenu '...**Reset Totalizer**' using .
...Preset Totalizer	Selection of submenu '...**Preset Totalizer**' using .

Totalizer / ...Reset Totalizer	
All Totalizer	Resets all totalizers to zero.
Massflow Fwd	Resets individual counters.
Massflow Rev	
Volumeflow Fwd	
Volumeflow Rev	

Totalizer / ...Preset Totalizer	
Massflow Fwd	Allows to edit/preset the totalizer values (e.g. when replacing the transmitter).
Massflow Rev	
Volumeflow Fwd	
Volumeflow Rev	

Software history

In accordance with NAMUR recommendation NE53, ABB offers a transparent and traceable software history.

Device software package FEx630 (device firmware package)				
Design	**Issue date**	**Type of change**	**Description**	**Ordering number**
00.01.04	04.2016	First release	-	3KXF002044U0100_00.01.04

8 Diagnosis / error messages

Calling up the error description

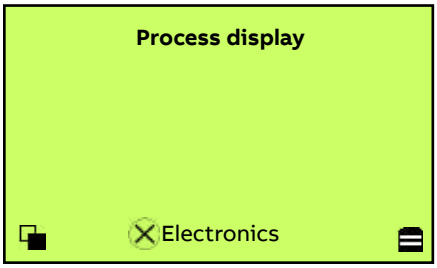

1 Use to switch to the information level (Operator Menu).

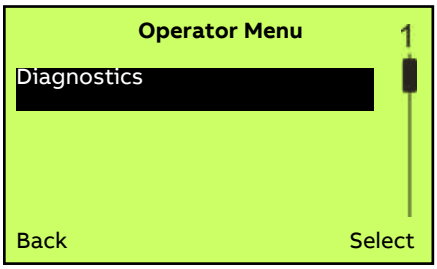

2 Use / to select the submenu 'Diagnostics'.
3 Confirm the selection with .

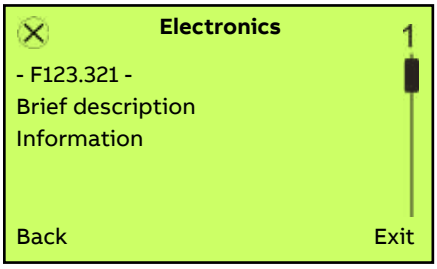

The first line shows the area in which the error has occurred.
The second line shows the unique error number.
The next lines show a brief description of the error and information on how to remedy it.

Note
For a detailed description of the error messages and information on troubleshooting, see the following pages.

8 ...Diagnosis / error messages

Error messages

The error messages are divided into four groups in accordance with the NAMUR classification scheme.

Errors

Error no. / Range	Text on the LCD display	Cause	Remedy
F099.042 / Electronics	ADC overrange alarm. Noise too high. Check applicati. Call service.	Electrode signal exceed max ADC Limits. No flow measurement possible.	In case of an empty pipe make sure the empty pipe detector is enabled. Make sure actual flowrate does not exceed flow range configured. Call Service
F098.012 / Electronics	FEB communication error. EMC disturbance. Call ABB Service.	Defective Frontend Board or Motherboard Hardware. Incorrect wiring between sensor and transmitter. Wrong or no connection between those two boards.	With integral design: Call service. With remote design: Check for wiring fault between sensor and remote transmitter. Call service
F097.029 / Electronics	Coil regulation error. Check wiring of sensor coils. Call service	Incorrect coil wiring (terminals M1 / M2) or Wire break / short circuit or defect of coil drive fuse or moisture in sensor terminal box.	Check for incorrect coil wiring (terminals M1 / M2) or Wire break / short circuit or defect of coil drive fuse or moisture in sensor terminal box.
F096.043 / Electronics	SIL self check alarm. Call service.	The SIL monitoring function has detected a transmitter error.	Call service
F095.036 / Electronics	Coil isolation alarm. Call service.	Defective coil incorrect wiring (shortcut M1 / M2 vs. GND). Flooded sensor	Call service
F094.022 / Electronics	Safety Alarm Curr. Out 31 / 32 SIL function detects error. Call Service.	The Current Output µController detects SIL relevant errors.	Call service
F093.032 / Electronics	Electrode short cuircit. Check wiring of sensor electrode. Call service.	Incorrect wiring or electrode leakage or short cut of electrode signal lead vs. shield or sensor flooded.	Check for incorrect wiring or electrode leakage or short cut of electrode signal lead vs shield or sensor flooded.
F092.033 / Electronics	Electrode open cuircit. Check wiring of sensor electrode. Call service.	Incorrect electrode wiring or electrode signal lead break.	Check for incorrect electrode wiring or electrode signal lead break.
F091.030 / Electronics	Coil wiring error. Check wiring of sensor coils. Call service.	Incorrect coil wiring (terminals M1 / M2) or Wire break / short circuit or defect of coil drive fuse or moisture in sensor terminal box.	Check for incorrect coil wiring (terminals M1 / M2) or Wire break / short circuit or defect of coil drive fuse or moisture in sensor terminal box.
F090.035 / Electronics	ADC RX210 com. error. Call service.	Bad EMC environment or defective component.	Replace electronic or Contact Service.
F088.013 / Electronics	FEB communication error. EMC disturbance. Call ABB Service.	EMC disturbance on the signal cable. Wrong signal cable.	Check Signal cable and connection. Call Service.

8 ...Diagnosis / error messages

...Error messages

Error no. / Range	Text on the LCD display	Cause	Remedy
F086.019 / Electronics	Curr.Out 31 / 32 com error. Defective Board. EMC disturbance. Call Service.	Defective Motherboard Hardware. EMC disturbance.	Call Service.
F084.011 / Electronics	NV data defect. Data storage irreparable. Call Service.	Data in SensorMemory corrupt.	Call Service.
F082.014 / Electronics	Incompatible Frontend Board. Frontend not fit to Motherboard. Call Service.	Wrong Frontend or Mother Board.	Call Service.
F081.026 / Electronics	MB voltages outside range. Defective Motherboard HW. Call Service.	Defective Mother Board Hardware.	Replace Mother Board. Call Service.

Function check

Error no. / Range	Text on the LCD display	Cause	Remedy
C078.004 / Config.	Flowrate to zero. Check digital in terminals.	The option card Digital Input is configured to "set flowrate to zero" and this event is triggered.	Check Digital Input terminals and configuration.
C076.006 / Config.	All totalizer stopp. Check digital in terminals.	The option card Digital Input is configured to "All Totalizer stopp" and this event is triggered.	Check Digital Input terminals and configuration.
C074.007 / Config.	Totalizer reset. Reset of one or more Totalizers.	The option card Digital Input is configured to "ResetTotalizer" and this event is triggered.	Check Digital Input terminals and configuration.
C072.003 / Config.	Simulation is on Simulated values. Switch off Simulation Mode.	The simulation of a process value or an output is active.	Switch off simulation mode.
C070.027 / Config.	An alarm is simulated. Switch off alarm simulation.	The simulation of an alarm is active.	Switch alarm simulation to "Off".

8 ...Diagnosis / error messages

...Error messages

Operation outside of specifications (Out Of Spec.)

Error no. / Range	Text on the LCD display	Cause	Remedy
S065.044 / Operation	Inhouse temp. alarm. Reduce ambient temperature.	Fluid or ambient temperature is out of spec.	Check proces conditions reduce temperature.
S064.041 / Operation	EPD alarm. Secure pipe is completely filled.	Sensor not filled.	Check for empty pipe Make sure sensor is filled completely.
S062.039 / Operation	Sensor temp. limits alarm. Change limits or change fluid temperature.	The fluid temperature is out of Limits.	Check process condition and adjust alarm limits.
S052.017 / Operation	Curr.Out 31 / 32 is saturated. CO process value out of range. Adapt Qmax.	The selected current output 31 / 32 process value is out of measuring range.	Adapt measuring range.
S047.016 / Operation	Pulse output is cut off. Wrong config. Check pulse out configuration.	The caluclated output pulse or frequency is above the configurated limit frequency.	Check pulse out configuration.
S046.001 / Operation	Mass flowrate exceeds limits. Check flowrate and alarm limits.	The mass flow is below or above the configured limit values "Qm Massflow Min" and "Qm Massflow Max".	Check the parameter settings in the "Process Alarm / ...Alarm Limits" menu and adjust if necessary. Check mass flow.
S044.002 / Operation	Volume flowrate exceeds limits. Check flowrate and alarm limits.	The volume flow is below or above the configured limit values "Qv Volumeflow Min" and "Qv Volumeflow Max".	Check the parameter settings in the "Process Alarm / ...Alarm Limits" menu and adjust if necessary. Check volume flow rate.
S041.034 / Electronics	DC feedback regulation. Check conditions of application. Call service.	Multi-phase measuring media that produce a very high level of noise. Stones or solids that produce a very high level of noise. Galvanic voltages at the measuring electrodes. Conductivity of measuring medium is not evenly distributed (e.g., directly after injection points).	Contact ABB Service.
S040.031 / Electronics	Coil impedance alarm. Call service.	Coil Inductance changed, coil damaged, coil isolation damaged, outer magnetic fields.	Contact ABB Service.

Maintenance

Error no. / Range	Text on the LCD display	Cause	Remedy
M038.010 / Electronics	Sensor memory defective. Mem. or connect. defective. Replace memory.	Defective NV-Memory module. NV-Memory module is not plugged in.	Check if NV-Memory module is plugged in. Call Service.
M037.015 / Electronics	NV chips defect on Motherboard. Defective MB. Replace MB. Call Service.	Defective NV-Memory.	Exchange Motherboard. Call Service.
M032.023 / Config.	Curr.Out 31 / 32 not calibrated. Call Service.	The Current Output 31 / 32 is not calibrated.	Call Service.
M028.008 / Config.	Display value is < 1600 h at Qmax. Change mass Unit or vol. Unit for Totalizer.	Totalizer unit is too small.	Change the mass or volume totalizer unit.
M026.005 / Config.	Maintenance interval is reached. Perform maintenance.	Set "Preset Maint. cycle" to zero to deactivate the maintenance timer.	Perform maintenance work. Start new cycle.
M024.009 / Config.	Device not calibrated. Call Service.	The device is not calibrated.	Call Service.

8 ...Diagnosis / error messages

Overview

Errors encountered are itemized in tabular form on the following pages. The response of the transmitter on error detection is described therein. The table lists all possible errors together with a description of their impact on the value of measurement variables, the properties of current outputs and the alarm output.

Error no. / Range	Error text	Current output	Digital output	Pulse output	LCD display	Error maskable?
F099.042 / Electronics	ADC overrange alarm. Noise too high. Check application. Call service.	High Alarm or Low Alarm, depending on parameter "Curr.Out at Alarm".	General Alarm, if DO is configured as "Logic / Alarm Signal".	0 Hz	0 %	No
F098.012 / Electronics	FEB communication error. EMC disturbance. Call ABB Service.			0 Hz	0 %	No
F097.029 / Electronics	Coil regulation error. Check wiring of sensor coils. Call service.			0 Hz	0 %	No
F096.043 / Electronics	SIL self check alarm. Call service.			Current value - no change.	Current value - no change.	No
F095.036 / Electronics	Coil isolation alarm. Call service.			Current value - no change.	Current value - no change.	No
F094.022 / Electronics	Safety Alarm Curr. Out 31 / 32 SIL function detects error. Call Service.			Current value - no change.	Current value - no change.	No
F093.032 / Electronics	Electrode short cuircit. Check wiring of sensor electrode. Call service.			0 Hz	0 %	No
F092.033 / Electronics	Electrode open cuircit. Check wiring of sensor electrode. Call service.			0 Hz	0 %	No
F091.030 / Electronics	Coil wiring error. Check wiring of sensor coils. Call service.			0 Hz	0 %	No
F090.035 / Electronics	ADC RX210 com. error. Call service.			0 Hz	0 %	No
F088.013 / Electronics	FEB communication error. EMC disturbance. Call ABB Service.			0 Hz	0 %	No
F086.019 / Electronics	Curr.Out 31 / 32 com error. Defective Board. EMC disturbance. Call Service.			Current value - no change.	Current value - no change.	No
F084.011 / Electronics	NV data defect. Data storage irreparable. Call Service.			0 Hz	0 %	No
F082.014 / Electronics	Incompatible Frontend Board. Frontend not fit to Motherboard. Call Service.			0 Hz	0 %	No
F081.026 / Electronics	MB voltages outside range. Defective Motherboard HW. Call Service.			0 Hz	0 %	No

8 ...Diagnosis / error messages

...Overview

Error no. / Range	Error text	Current output	Digital output	Pulse output	LCD display	Error maskable?
C078.004 / Config.	Flowrate to zero. Check digital in terminals.	4 mA (0 % flow)	Current value - no change.	0 Hz	0 %	Menu "...Group Masking".
C076.006 / Config.	All totalizer stopp. Check digital in terminals.	Current value - no change.	Current value - no change.	Current value - no change.	Current value - no change.	
C074.007 / Config.	Totalizer reset. Reset of one or more Totalizers.	Current value - no change.	Current value - no change.	Current value - no change.	Current value - no change.	Menu "...Group Masking".
C072.003 / Config.	Simulation is on Simulated values. Switch off Simulation Mode.	Current value - no change.	Current value - no change.	Current value - no change.	Current value - no change.	
C070.027 / Config.	An alarm is simulated. Switch off alarm simulation.	Current value - no change.	Current value - no change.	Current value - no change.	Current value - no change.	
S065.044 / Operation	Inhouse temp. alarm. Reduce ambient temperature.	Current value - no change.	No response	No response	Current value - no change.	
S064.041 / Operation	EPD alarm. Secure pipe is completely filled.	Alarm - as configured in menu "Curr. at EPD Alarm".	Alarm if DO is configured as "Logic / Alarm Signal / EPD".	0	0 %	Menu "...Group Masking".
S062.039 / Operation	Sensor temp. limits alarm. Change limits or change fluid temperature.	Current value - no change.	No response	Current value - no change.	Current value - no change.	Menu "...Group Masking".
S052.017 / Operation	Curr.Out 31 / 32 is saturated. CO process value out of range. Adapt Qmax.	Alarm - as configured in menu "Curr.Out > 20.5mA".	Current value - no change.	Current value - no change.	Current value - no change.	Menu "...Group Masking".
S047.016 / Operation	Pulse output is cut off. Wrong config. Check pulse out configuration.	Current value - no change.	Current value - no change.	Maximum possible pulse rate	Current value - no change.	Menu "...Group Masking".
S046.001 / Operation	Mass flowrate exceeds limits. Check flowrate and alarm limits.	Current value - no change.	Alarm if DO is configured as "Qm Massflow Max" or "Qm Massflow Min".	Current value - no change.	Current value - no change.	Menu "...Group Masking".
S044.002 / Operation	Volume flowrate exceeds limits. Check flowrate and alarm limits.	Current value - no change.	Alarm if DO is configured as "Qv Volumeflow Max" or "Qv Volumeflow Min".	Current value - no change.	Current value - no change.	Menu "...Group Masking".
S041.034 / Electronics	DC feedback regulation. Check conditions of application. Call service.	4 mA (0 % flow)	No response.	0 Hz	0 %	Menu "...Group Masking".
S040.031 / Electronics	Coil impedance alarm. Call service.	Current value - no change.	No response.	Current value - no change.	Current value - no change.	Menu "...Group Masking".

8 ...Diagnosis / error messages

...Overview

Error no. / Range	Error text	Current output	Digital output	Pulse output	LCD display	Error maskable?
M038.010 / Electronics	Sensor memory defective. Mem. or connect. defective. Replace memory.					
M037.015 / Electronics	NV chips defect on Motherboard. Defective MB. Replace MB. Call Service.					
M032.023 / Config.	Curr.Out 31 / 32 not calibrated. Call Service.	Current value - no change.	No response.	Current value - no change.	Current value - no change.	Menu "...Group Masking".
M028.008 / Config.	Display value is < 1600 h at Qmax. Change mass Unit or vol. Unit for Totalizer.					
M026.005 / Config.	Maintenance interval is reached. Perform maintenance.					
M024.009 / Config.	Device not calibrated. Call Service.	High Alarm or Low Alarm, depending on parameter "Curr.Out at Alarm".	Current value - no change.	Current value - no change.	Current value - no change.	Menu "...Group Masking".

9 Maintenance

Safety instructions

WARNING

Risk of injury due to live parts.

When the housing is open, contact protection is not provided and EMC protection is limited.

Before opening the housing, switch off the power supply.

CAUTION

Risk of burns due to hot measuring media
The device surface temperature may exceed 158 °F (70 °C), depending on the measuring medium temperature. Before starting work on the device, make sure that it has cooled sufficiently.

Note
Damage to components.
The electronic components of the printed circuit board can be damaged by static electricity (observe ESD guidelines).
Make sure that the static electricity in your body is discharged before touching electronic components.

Corrective maintenance work may only be performed by trained personnel.
- Before removing the device, depressurize it and any adjacent lines or containers.
- Check whether hazardous materials have been used as materials to be measured before opening the device. Residual amounts of hazardous material may still be present in the device and could escape when it is opened.

Within the scope of operator responsibility, check the following as part of a regular inspection:
- the pressure-carrying walls / lining of the pressure device
- the measurement-related function
- the leak tightness
- the wear (corrosion)

Flowmeter sensor

The flowmeter sensor is largely maintenance-free.
The following items should be checked annually:
- Ambient conditions (air circulation, humidity)
- Seal integrity of the process connections
- Cable entry points cover gaskets and cover screws
- Operational reliability of the power supply feed, the lightning protection, and the grounding

The flowmeter sensor electrodes must be cleaned when the flowrate information on the transmitter changes when recording the identical flowrate volume. If the display shows a higher flowrate, the contamination is insulating. If a lower flowrate is displayed, the contamination results in a short-circuit. For repairs to the lining, electrodes or magnet coil, the flowmeter must be returned to the manufacturer.
See chapter "Returning devices" on page 74.

Cleaning
When cleaning the exterior of meters, make sure that the cleaning agent used does not corrode the housing surface and the seals.
To avoid static charge, a damp cloth must be used for cleaning.

10 Repair

WARNING

Risk of injury due to live parts.
When the housing is open, contact protection is not provided and EMC protection is limited.
Before opening the housing, switch off the power supply.

CAUTION

Risk of burns due to hot measuring media
Risk of burns due to hot measuring media.
The device surface temperature may exceed 158 °F (70 °C), depending on the measuring medium temperature.
Before starting work on the device, make sure that it has cooled sufficiently.

Note
Damage to components.
The electronic components of the printed circuit board can be damaged by static electricity (observe ESD guidelines).
Make sure that the static electricity in your body is discharged before touching electronic components.

Spare parts

Repair and maintenance activities may only be performed by authorized customer service personnel.
When replacing or repairing individual components, use original spare parts.

Note
Spare parts can be ordered from ABB Service:
Please contact Customer Center Service listed on page 4 for nearest service location.

Fuse replacement

Note
If the O-ring gasket is seated incorrectly or damaged, this may have an adverse effect on the housing protection class.
Follow the instructions in chapter "Opening and closing the terminal box" on page 14 to open and close the housing safely.

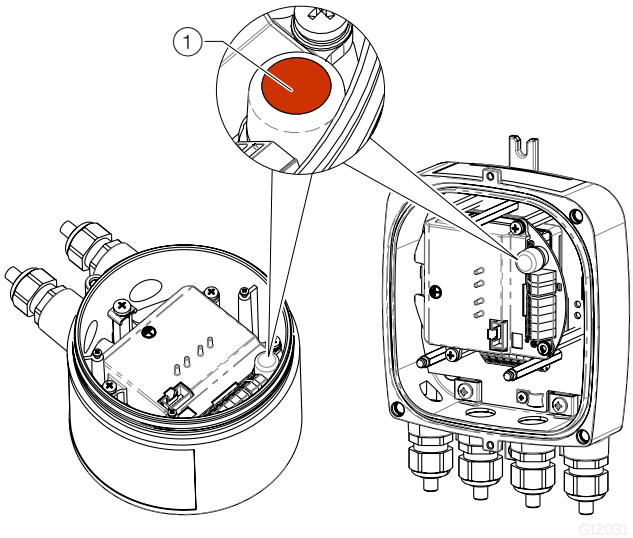

Figure 45 Fuse replacement

(1) Fuse holder with fuse

There is a fuse in the transmitter terminal box.

Component	Order number
Fuse (T 500 mA, 250 V) for power supply, suitable for all devices	**3KQR000443U0100**

Perform the following steps to replace the fuse:
1. Switch off the power supply.
2. Open the transmitter terminal box.
3. Remove LCD-Display
4. Pull out the defective fuse and insert a new fuse.
5. Insert the LCD indicator
6. Close the transmitter terminal box.
7. Switch on the power supply.
8. Check that the device is working correctly.

If the fuse blows again on activation, the device is defective and must be replaced.

10 ...Repair

Replacing the LCD indicator

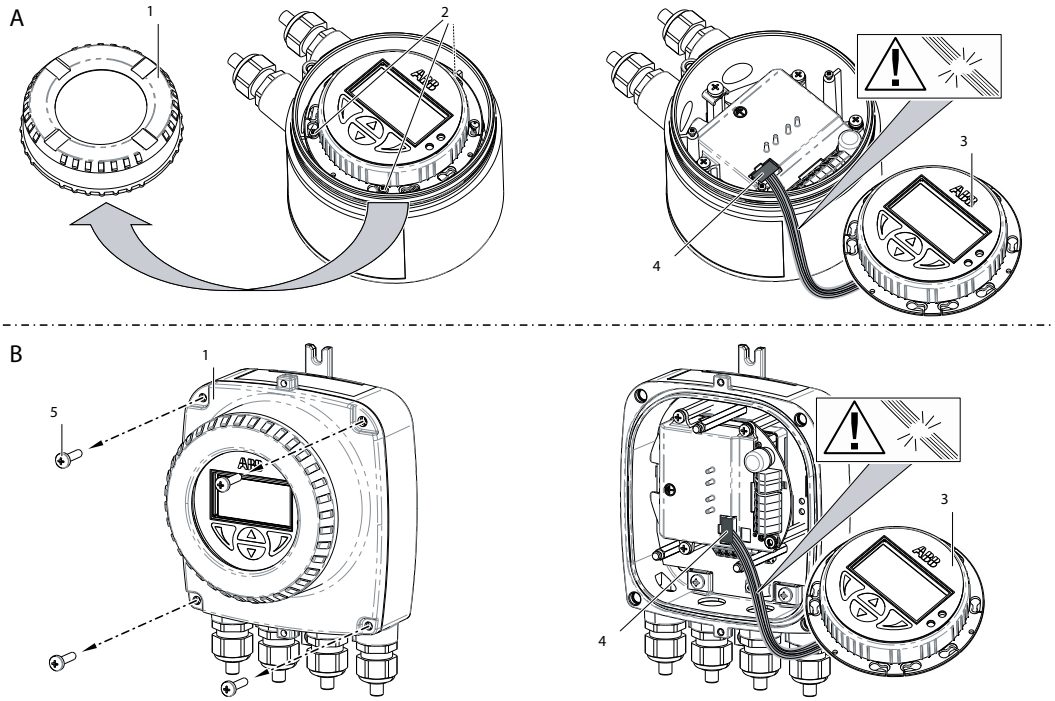

Figure 46 Replace LCD indicator

- (A) Integral mount design
- (B) Remote mount design
- (1) Housing cover
- (2) Fixing screws for LCD indicator
- (3) LCD indicator
- (4) Connector
- (5) Fixing screws for housing cover (4x)

Note

If the O-ring gasket is seated incorrectly or damaged, this may have an adverse effect on the housing protection class.

Follow the instructions in chapter "Opening and closing the terminal box" on page 14 to open and close the housing safely.

The LCD indicator can be replaced in the event of a malfunction.

Component	Ordering number
LCD indicator (HMI). Applicable for integral and remote mount design.	3KQZ407125U0100

Replace the LCD indicator as follows:

1. Switch off the power supply.
2. Unscrew / remove the cover.
3. Loosen the screws for the LCD indicator (only on integral mount design).
4. Remove the LCD indicator.
5. Pull the connector out of the electronic.
6. Plug in the connector of the new LCD indicator. Ensure that the cable harness is not damaged.
7. Insert the LCD indicator and screw on /replace the cover.
8. Switch on the power supply.

10 ...Repair

Replacing the transmitter

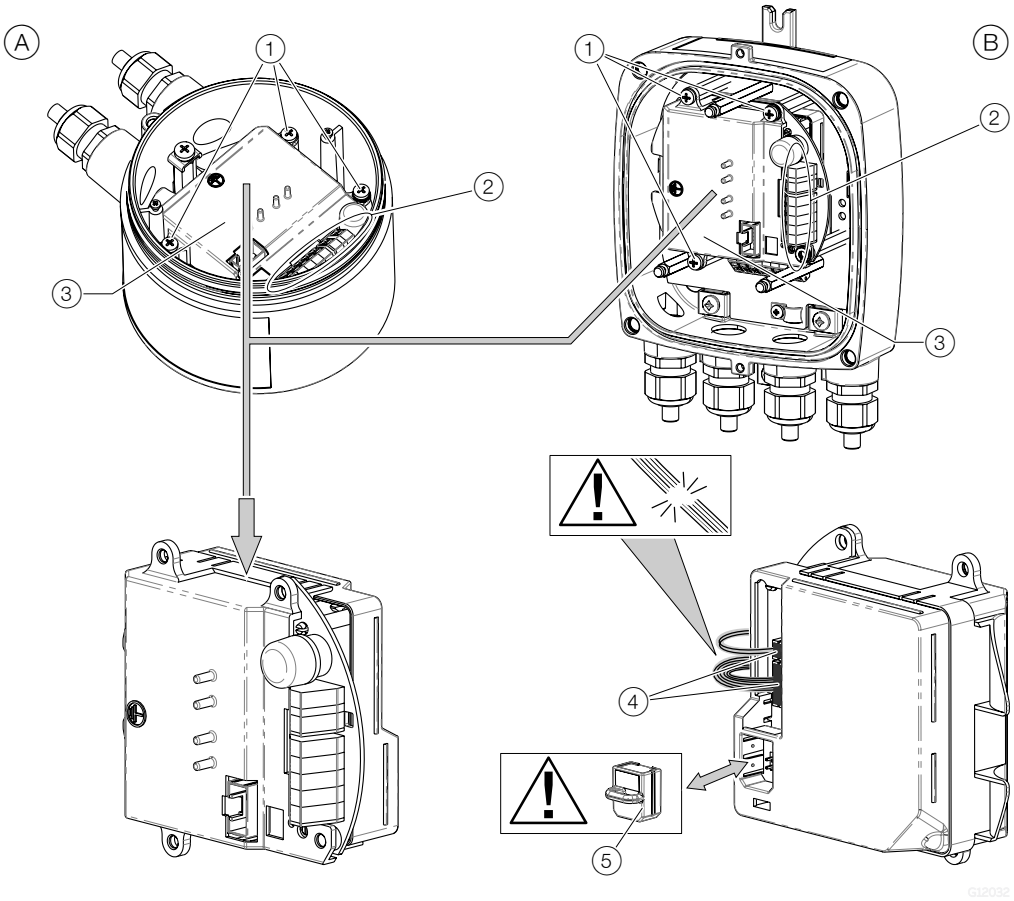

Figure 47 Replacing the transmitter electronic

(A) Integral mount design
(B) Remote mount design (remote transmitter)
(1) Fixing screw transmitter electronic
(2) Connection terminals
(3) Transmitter electronic
(4) Connectors for flowmeter sensor
(5) SensorMemory

Note
If the O-ring gasket is seated incorrectly or damaged, this may have an adverse effect on the housing protection class.
Follow the instructions in chapter "Opening and closing the terminal box" on page 14 to open and close the housing safely.

The transmitter electronic can be replaced in the event of a malfunction.

Component	Ordering number
Transmitter electronic	3KXF002683U0100

Replace the transmitter electronic as follows:

1. Switch off the power supply.
2. Unscrew / remove the cover.
3. Remove the LCD indicator. Ensure that the cable harness is not damaged.
4. Loosen the fixing screw (3x) for the transmitter electronic.
5. Remove the faulty transmitter electronic.
6. Pull the connector out of the sensor cable harness. Ensure that the cable harness is not damaged.
7. Pull out the SensorMemory.

Note
The SensorMemory is assigned to the sensor. Ensure that the SensorMemory remains with the sensor and cannot be lost.

8. Insert the SensorMemory into the new transmitter electronic.
9. Attach the connector of the sensor cable harness.
10. Insert the new transmitter electronic and fix it with the fixing screws (3x).
11. Insert the LCD indicator and screw on /replace the cover.
12. Once the power supply is switched on, the transmitter automatically replicates the system data from the SensorMemory.

10 ...Repair

Replacing the flowmeter sensor

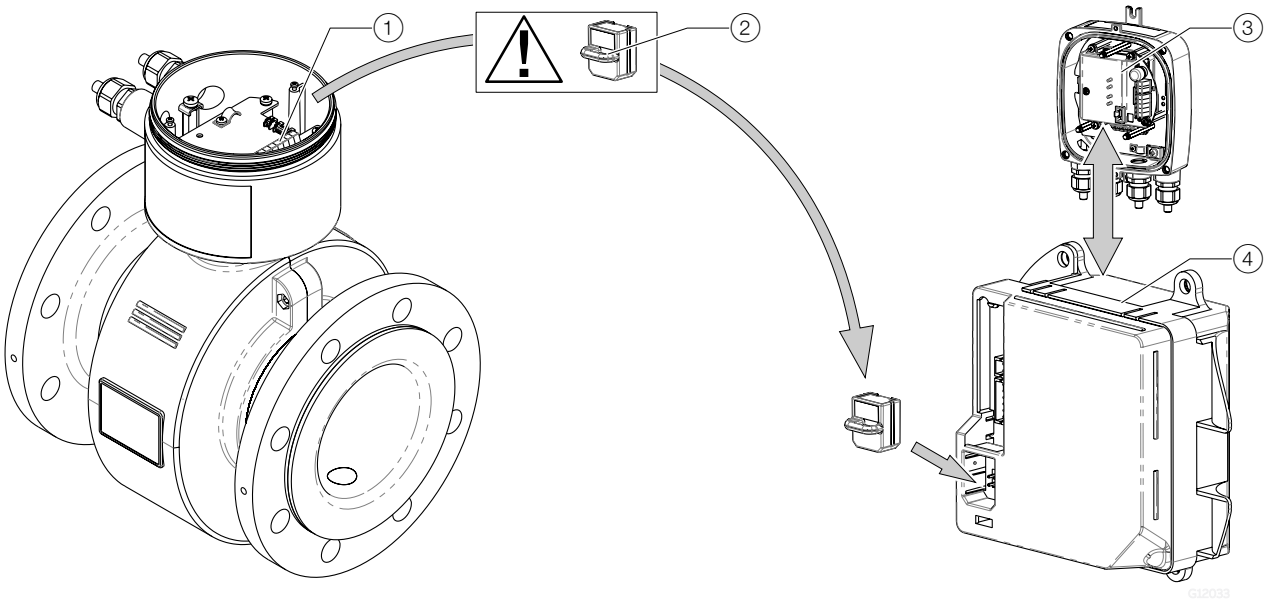

Figure 48 Sensor replacement

1. Terminal for signal cable
2. SensorMemory
3. Tansmitter
4. Transmitter electronic

Note
If the O-ring gasket is seated incorrectly or damaged, this may have an adverse effect on the housing protection class.
Follow the instructions in chapter "Opening and closing the terminal box" on page 14 to open and close the housing safely.

Note
Together with the replacement sensor, a SensorMemory Module carrying the calibration data is provided.
The SensorMemory module is located in the terminal box of the new sensor.

- Plug this SensorMemory module in the transmitter. Refer to chapter "Replacing the transmitter" on page 72 for SensorMemory installation.

Replace the sensor as follows:

1. Switch off the power supply.
2. Unscrew the cover.
3. Disconnect the signal cable (if necessary, remove the potting compound).
4. Install the new sensor in accordance with chapter "Installation" on page 9.
5. Insert the SensorMemory from the new Sensor in the transmitter.
6. Complete the electrical connection in accordance with chapter "Electrical connections" on page 18.
7. Close the cover.
8. Once the power supply is switched on, the transmitter automatically replicates the system data from the SensorMemory.

10 ...Repair

Loading the system data

1 Switch on the power supply.
The LCD display shows the following message during startup process:

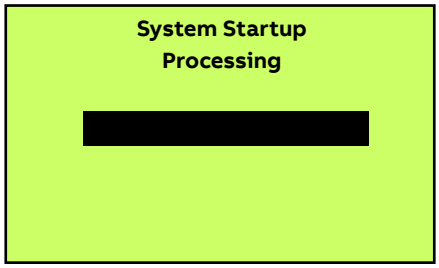

During this time the transmitter loads sensor data and transmitter settings such as flow range, damping and pulse width from the SensorMemory1).

2 The process display is shown once startup process is completed.
3 The flowmeter is ready for operation with settings as received from the factory To change the settings, refer to chapter "Parameterization of the device" on page 28.

Note
Check and make sure that the parameter settings are correct.

1) The SensorMemory is a pluggable data memory. It is located on the rear side of the transmitter electronic.

Returning devices

Use the original packaging or a secure transport container of an appropriate type if you need to return the device for repair or recalibration purposes. Fill out the return form (see the Appendix) and include this with the device.
According to the EU Directive governing hazardous materials, the owner of hazardous waste is responsible for its disposal or must observe the following regulations for shipping purposes:
All devices delivered to ABB must be free from any hazardous materials (acids, alkalis, solvents, etc.).

Please contact Customer Center Service listed on page 4 for nearest service location.

11 Recycling and disposal

Dismounting

⚠ WARNING

Risk of injury due to process conditions.
The process conditions, e.g. high pressures and temperatures, toxic and aggressive measuring media, can give rise to hazards when dismantling the device.
- If necessary, wear suitable personal protective equipment during disassembly.
- Before disassembly, ensure that the process conditions do not pose any safety risks.
- Depressurize and empty the device / piping, allow to cool and purge if necessary.

Bear the following points in mind when dismounting the device:
- Switch off the power supply.
- Disconnect electrical connections.
- Allow the device / piping to cool and depressurize and empty. Collect any escaping medium and dispose of it in accordance with environmental guidelines.
- Use appropriate tools to dismount the device, taking the weight of the device into consideration.
- If the device is to be used at another location, the device should preferably be packaged in its original packing so that it cannot be damaged.
- See the information in chapter "Returning devices" on page 74.

Disposal

This product and its packaging are manufactured from materials that can be recycled by specialist recycling companies.

Bear the following points in mind when disposing of them:
- This product is not subject to WEEE Directive 2002/96/EC or relevant national laws (e.g. ElektroG in Germany).
- The product must be surrendered to a specialist recycling company. Do not use municipal garbage collection points. According to WEEE Directive 2002/96/EC, only products used in private applications may be disposed of at municipal garbage collection points.
- If it is not possible to dispose of old equipment properly, ABB Service can take receipt of and dispose of returns for a fee.

Note
Products that are marked with this symbol may not be disposed of through municipal garbage collection points.

Information on ROHS Directive 2011/65/EC

The products provided by ABB Automation Products GmbH and its affiliates do not fall within the current scope of regulations on hazardous substances with restricted uses or the directive on waste electrical and electronic equipment according to ElektroG.

If the necessary components are available on the market at the right time, in the future these substances will no longer be used in new product development.

12 Specification

Note
The device data sheet is available in the ABB download area at www.abb.com/flow.

Permitted pipe vibration

In accordance with EN 60068-2-6.
Applicable to sensors in remote mount design and sensors in integral mount design.

- Maximum deflection: 0.006 inch (0.15 mm) in the 10 ... 58 Hz range
- Maximum acceleration: 2 g, in the 58 ... 150 Hz range

ProcessMaster – Temperature data

Storage temperature range
-22 ... 158 °F (-30 ... 70 °C)
The temperature range offered by the device is dependent on a number of different factors.
These factors include the measuring medium temperature Tmedium, the ambient temperature Tamb., the operating pressure Pmedium, the liner material and the approvals for the explosion protection.

12 ...Specification

...ProcessMaster – Temperature data

Ambient temperature as a function of measuring medium temperature

Integral design:

Maximum permissible combination of ambient and medium temperatures (Standard version)

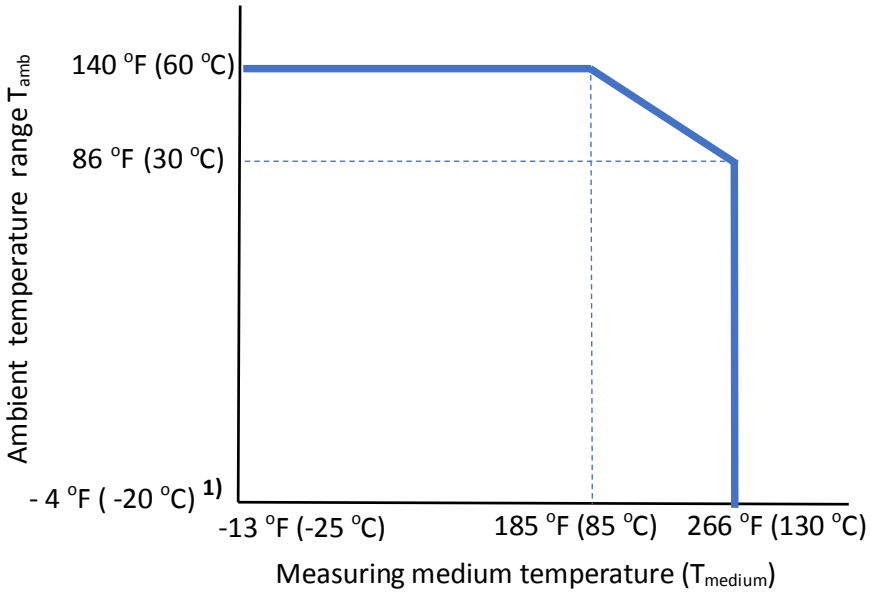

Remote mount design:

Maximum permissible combination of ambient and medium temperatures (Optional high temperature version)

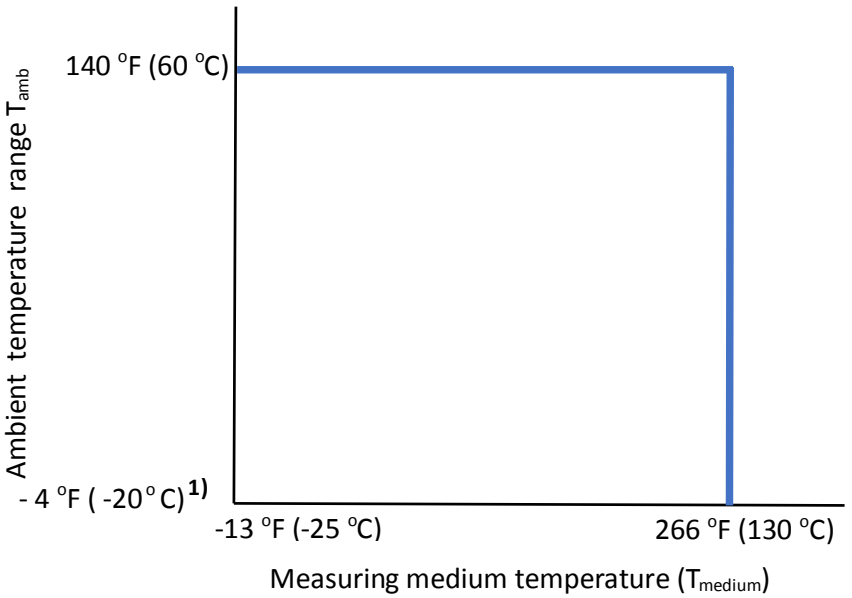

1 **Minimum ambient temperature is 14 °F (-10 °C) with carbon steel mating flanges. Stainless steel mating flanges must be used to reach the - 4 °F (-20 °C) temperature.**

12 ...Specification

ProcessMaster – Material load for process connections

The limits for the permissible measuring medium temperature (Tmedium) and permissible pressure (Pmedium) are calculated on the basis of the lining and flange material used in the device (refer to the name plate on the device).

Minimum permissible operating pressure
The following tables show the minimum permissible operating pressure (P_{medium}) depending on measuring medium temperature (T_{medium}) and the liner materiall.

Lining material	Nominal diameter	P_{medium} [mbar abs]	T_{medium}
ETFE	1-4“ (DN 25 ... 100)	100	< 266 °F (130 °C)

Liner approvals on request; please contact ABB.

12 ...Specification

...ProcessMaster – Material load for process connections

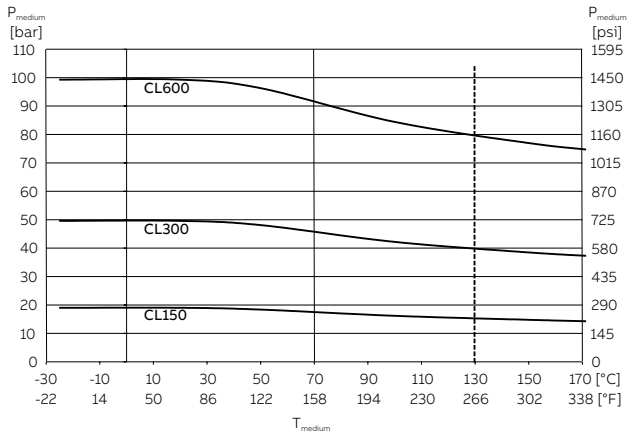

Figure 49 ASME flange, stainless steel, up to 16” (DN 400) (CL 150 / 300)

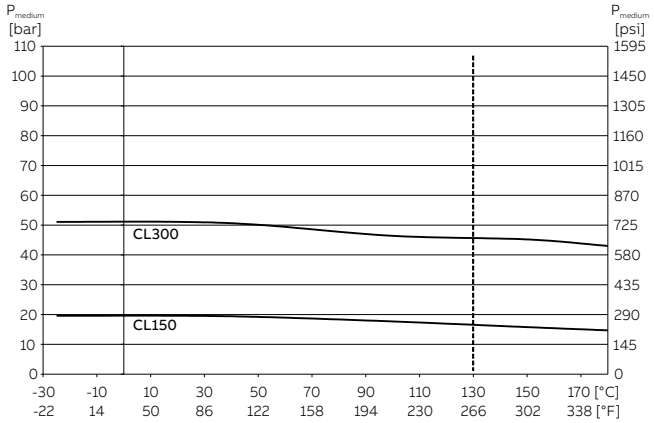

Figure 50 ASME flange, steel, up to 16” (DN 400) (CL 150 / 300)

Trademarks

™ Hastelloy C is a trademark of Haynes International

13 Appendix

Return form

Statement on the contamination of devices and components
Repair and / or maintenance work will only be performed on devices and components if a statement form has been completed and submitted.

Otherwise, the device / component returned may be rejected. This statement form may only be completed and signed by authorized specialist personnel employed by the operator.

Customer details:

Company:

Address:

Contact person: Telephone:

Fax: Email:

Device details:

Type: Serial no.:

Reason for the return/description of the defect:

Was this device used in conjunction with substances which pose a threat or risk to health?

☐ Yes ☐ No

If yes, which type of contamination (please place an X next to the applicable items):

☐ biological	☐ corrosive / irritating	☐ combustible (highly / extremely combustible)
☐ toxic	☐ explosive	☐ other toxic substances
☐ radioactive		

Which substances have come into contact with the device?

1.

2.

3.

We hereby state that the devices/components shipped have been cleaned and are free from any dangerous or poisonous substances.

Town/city, date Signature and company stamp

Declarations of conformity

Note
All documentation, declarations of conformity, and certificates are available in ABB's download area.
www.abb.com/flow

13 ...Appendix

Torque information

Tightening torques for sensors

Note
The specified torques are valid only for greased threads and piping that is not subject to tensile stress.

ProcessMaster in wafer-type design

Meter Size	ANSI Class 150		ANSI Class 300	
	Ft. Lbs	Nm	Ft. Lbs	Nm
≤1/2” (≤ DN15)	10	15	15	20
1” (DN25)	10	15	15	20
1-1/2” (DN 40)	15	20	25	35
2” (DN50)	25	35	15	20
3” (DN80)	40	55	30	40
4” (DN100)	30	40	45	60

13 ...Appendix

Overview parameter settings (factory default settings)

Parameter	Possible parameter settings	Factory default settings
Sensor Tag	Alphanumeric, max. 20 characters	None
Sensor Location Tag	Alphanumeric, max. 20 characters	None
Qv Max 1	Depending on nominal diameter of the flowmeter sensor.	Set to QmaxDN according to chapter "Measuring range table" on page 34.
Unit Volumeflow Qv	l/s; l/min; l/h; ml/s; ml/min; m3/s; m3/min; m3/h; m3/d; hl/h; g/s; g/min; g/h; kg/s; kg/min; kg/h; kg/d; t/min; t/h; t/d	g/min
Unit Vol. Totalizer	m3; l; ml; hl; g; kg; t	Gallon (g)
Pulses per Unit	1 ... 10000	1
Pulse Width	0.1 ... 2000 ms	100 ms
Damping	0.02 ... 60 s	1
Operating mode digital output 41 / 42	Off, binary output, pulse output, frequency output	Digital output 41 / 42 as pulse output for forward flow and reverse flow.
Operating mode digital output 51 / 52	Off, binary output, pulse output (follows digital output 41 / 42, 90° or 180° phase shift)	Digital output 51 / 52 as binary output for flow direction.
Curr.Out 31 / 32	4-20mA FWD/REV, 4-20mA FWD, 4-12-20 mA	4-20mA FWD/REV
Curr.Out at Alarm	High Alarm 21 ... 23 mA oder Low Alarm 3.5 ... 3.6 mA	High Alarm, 21.8 mA
Current at flow > 103 % (I=20,5 mA)	Off (Current output remains at 20.5 mA), High Alarm, Low Alarm.	Off
Low flow cut-off	0 ... 10 %	1 %
Empty conduit detector	On / Off	Off

Notes

ABB Inc.
Measurement & Analytics
125 E. County Line Road
Warminster, PA 18974
USA
Tel: +1 215 674 6000
Fax: +1 215 674 7183

abb.com/flow

To find your local ABB contact visit:
abb.com/contacts

3KXF271610R4201

OI/FEM610-EN REV. A 6.2019