Protection Considerations for Distributed Generation

- Presented By -

Scott R. Secrest, PE

Vice President

Technical Business Development

Three-C Engineering Services

THREE-C ELECTRICAL COMPANY, INC.

IEEE PES Power & Energy Society®

IEEE PES Boston Section Technical Meeting
October 2011

What is Distributed Generation (or DG)?

- The use of smaller-scale technologies to produce electricity close to the end users of power.
- ***Not Strictly Renewable or Green Power***
- Includes
  - Gas and Oil Reciprocating Engines
  - Combustion Turbines
  - Steam Turbines
  - Hydro Generation
  - Wind
  - Solar
  - Microturbines on natural gas
  - Geothermal
  - Wave/Tidal

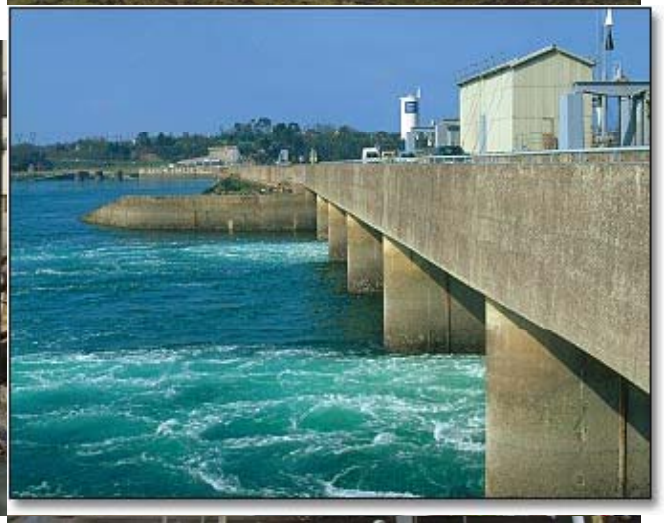

A Brief History of DG

Pre-1970's
Traditional
Vertically Integrated Utility
Central Station Power Plant

A Brief History of DG

Instances DG Rare

- Limited to Large Paper Mills and Petro-Chemical Plants

A Brief History of DG

A Paradigm Shift in the 1970's

- 1973 ➔ The Arab Oil Embargo

A Brief History of DG

A Paradigm Shift in the 1970's

- 1978 – Jimmy Carter signs PURPA (Public Utilities Regulatory Policy Act)
- Required Utilities to Allow IPP's to Connect to Grid
- Required Utilities Buy Power from IPP's at Avoided Cost
- PURPA along with advances in combined cycle technology created a new entity – the NUG
- 1983 – US Supreme Court upholds PURPA

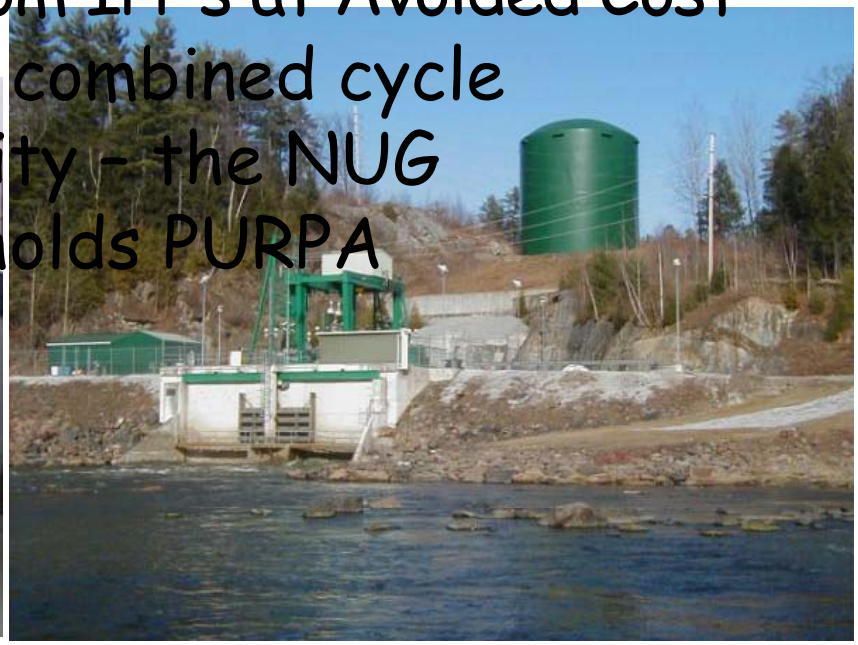

A Brief History of DG

- "Cogen" capacity quadruples from 10.5 MW in 1979 to 40.7 MW in 1992
- Electric rates drop by ~30% due this limited competition
- Gulf War leads to Energy Policy Act of 1992 (Again) to reduce dependence on foreign oil
- EPAct Expands Participants in Power Generation Market but sales limited to "host" interconnecting utility – does not allow for "retail wheeling"
- FERC order 888 in 1996 mandates Open Access to the Transmission grid to non-utility generators

A Brief History of DG

- Current Policies Federal And State Policies driving renewed interest in DG
  - Concern over climate change and global warming
  - Emphasis on "green power"
  - Energy Policy Act of 2005 - Established goals distributed generation and renewables
  - States have Mandated Goals for Renewable Energy Portfolio

A Future for DG

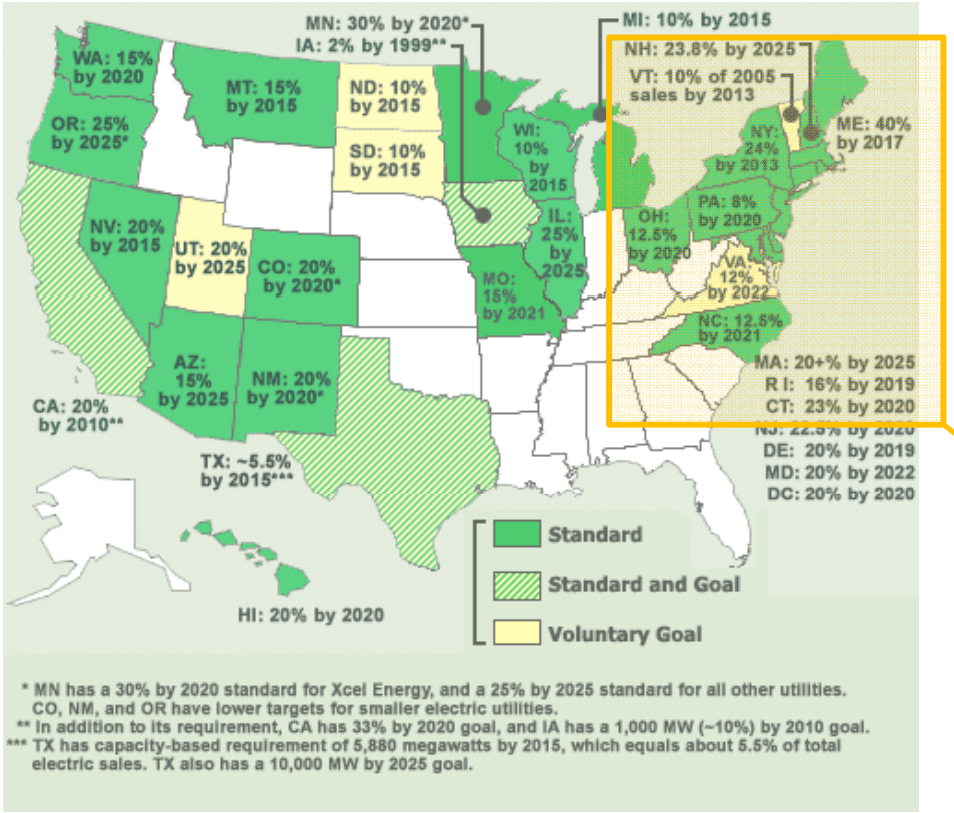

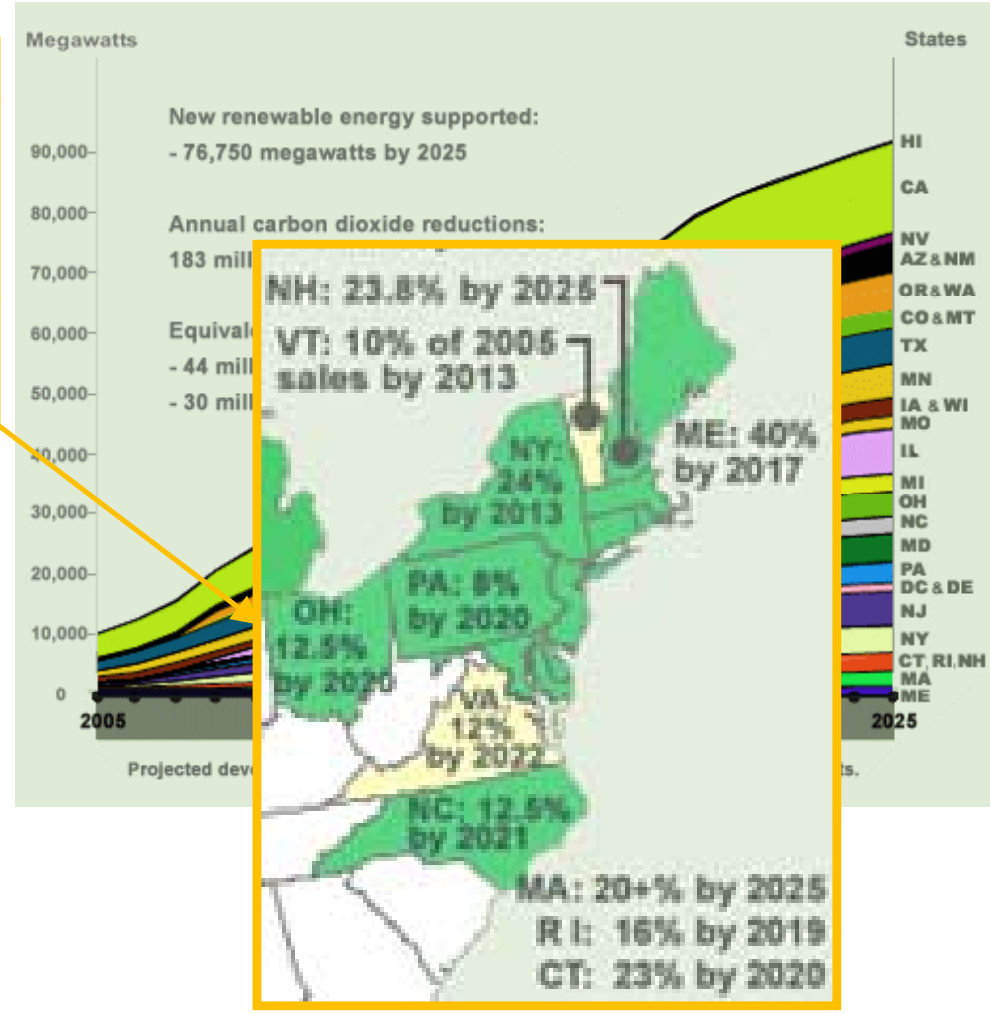

Source: Union of Concerned Scientists

Utility/Generator Perspective

Host Utility

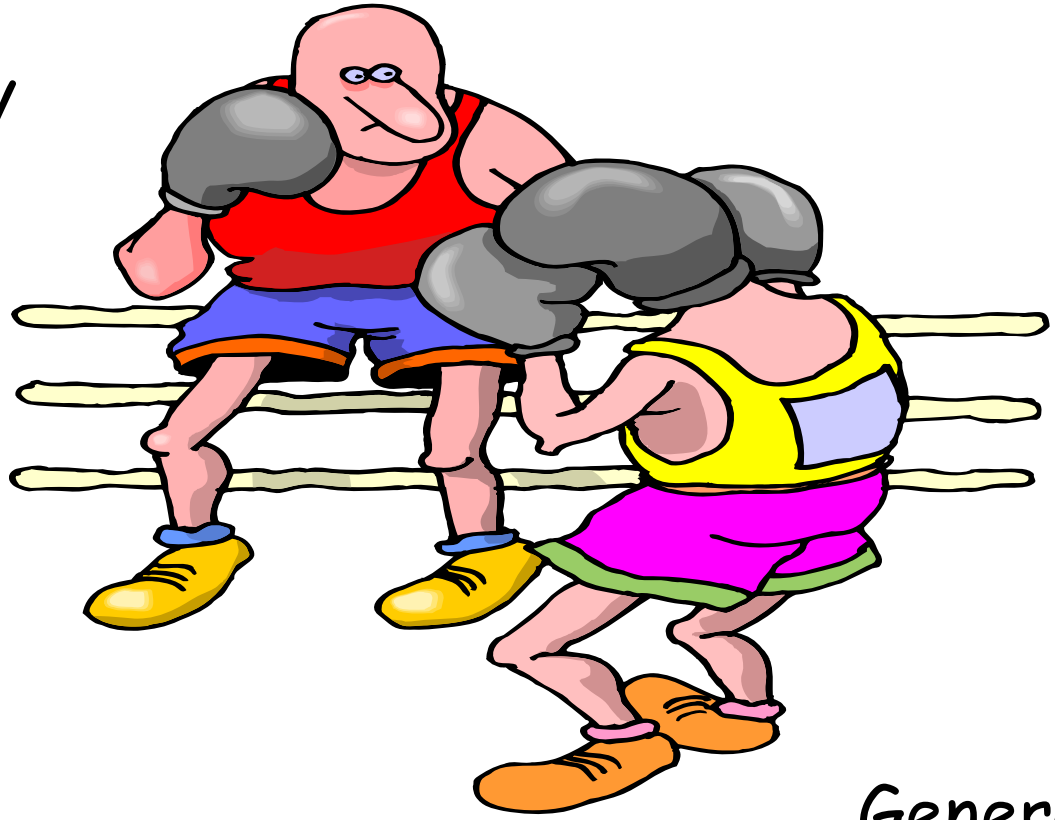

Generation Owner

Utility/Generator Perspective

Generation Owner

- Want generation assets to be
  - Reliable
  - Efficient
  - Safe
  - Protected from faults/events on utility power system
- Minimize (cost effective) installation cost
- Minimize O&M costs

Utility/Generator Perspective

Host Utility

- Needs to consider ALL DG installation on a feeder or substation
- Need the generation installation to be
  - Reliable
  - Safe
- Protect the utility power system from the generator
  - Can't compromise system protection or restoration
  - Can't negatively affect power quality or impact other customers
  - Can't compromise public or employee safety

Utility/Generator Perspective

Host Utility

- Adding a source to what was once a radial system
  - Power Flows from Substation to Load
  - Fault Currents flow in only one direction
  - Protection typically based on series overcurrent device coordinated in time
  - Often employ reclosing since many faults are temporary

Utility/Generator Perspective

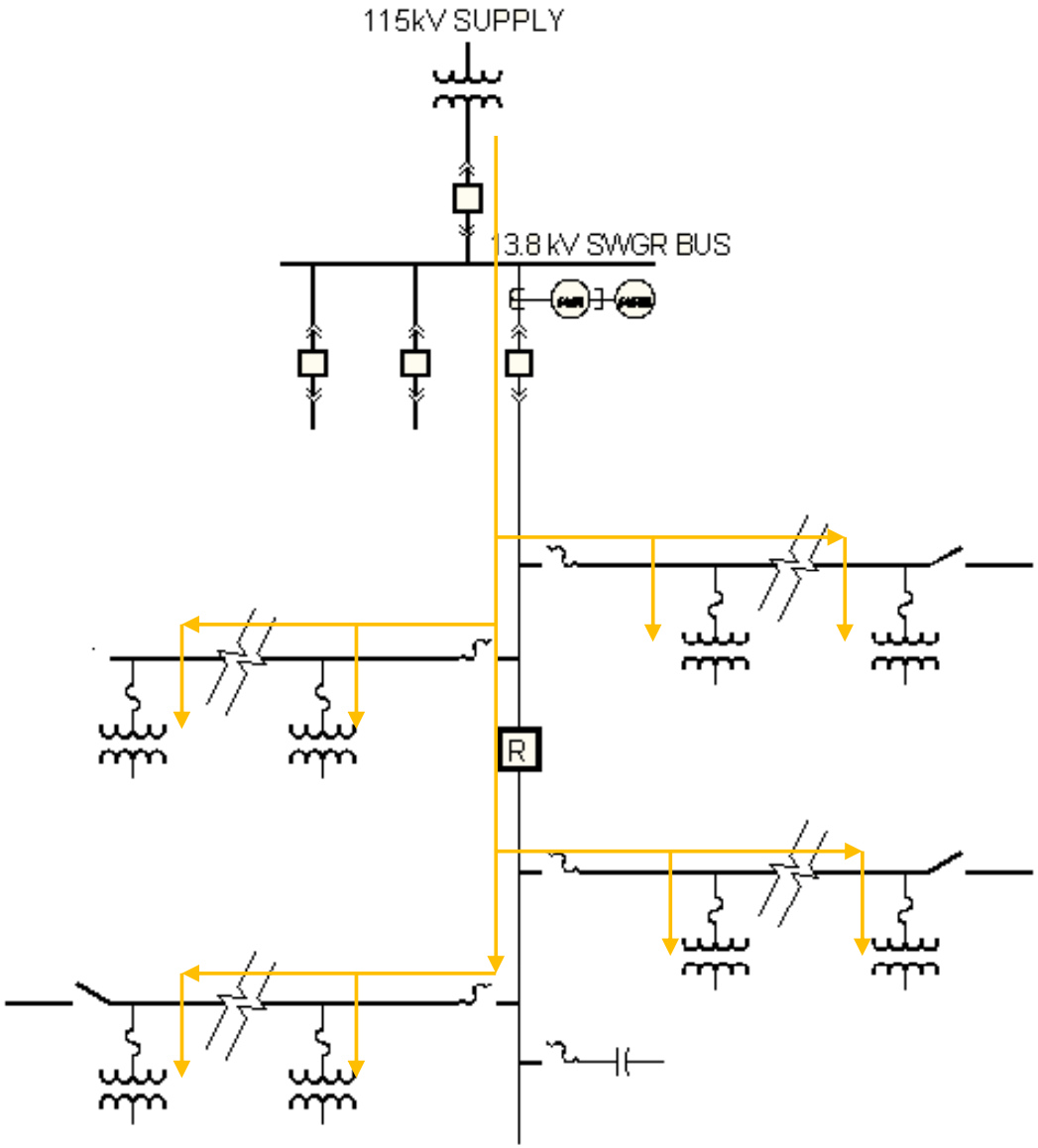

Utility/Generator Perspective

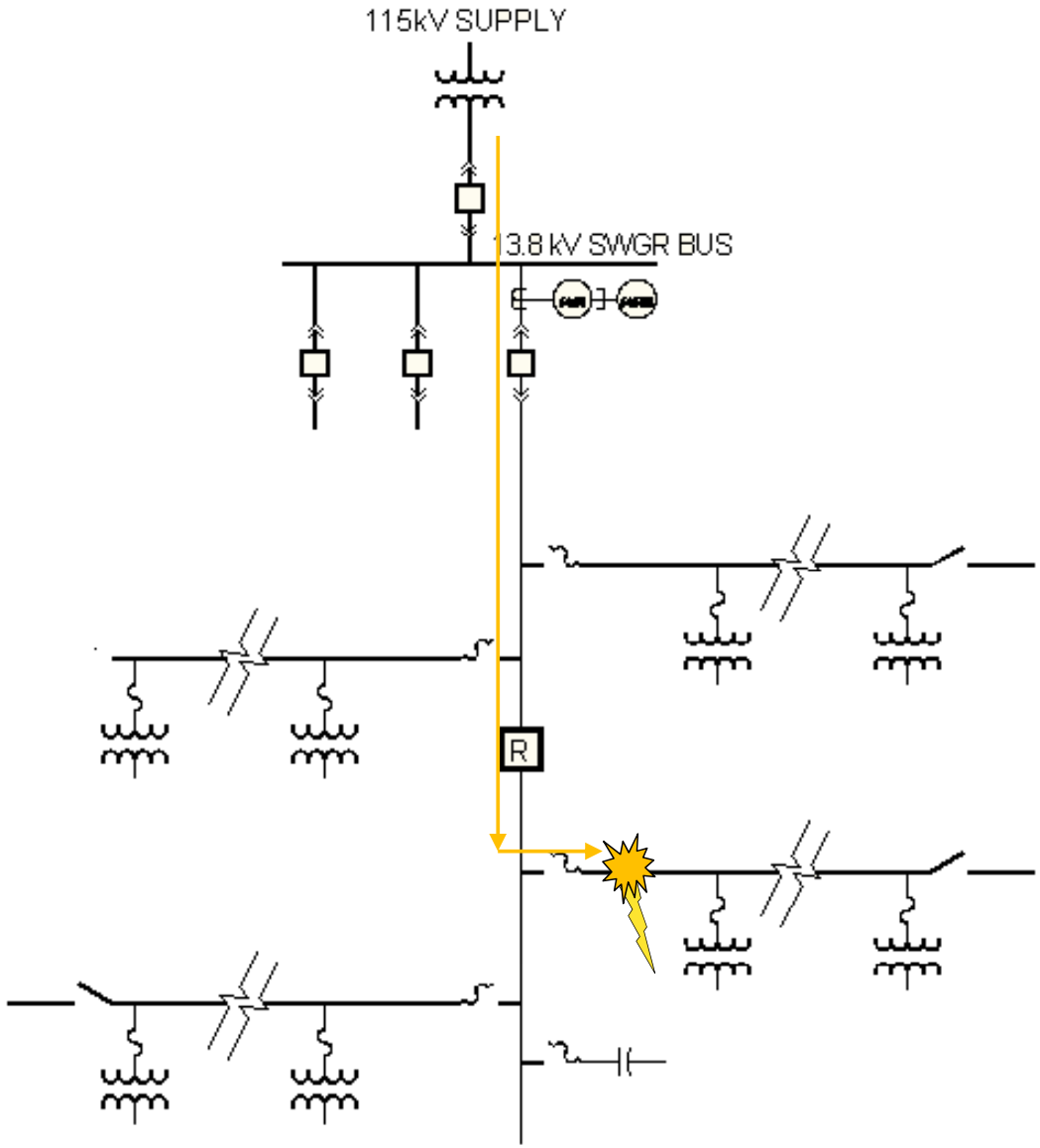

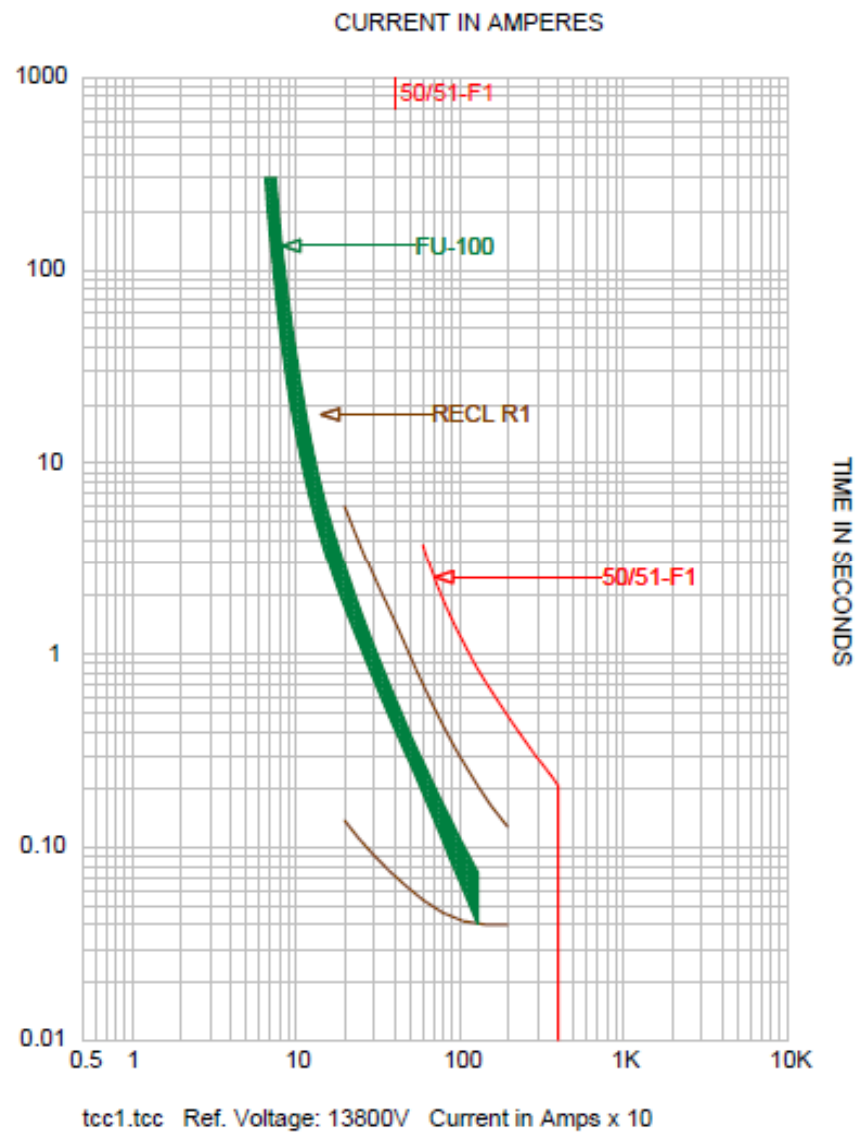

Utility/Generator Perspective

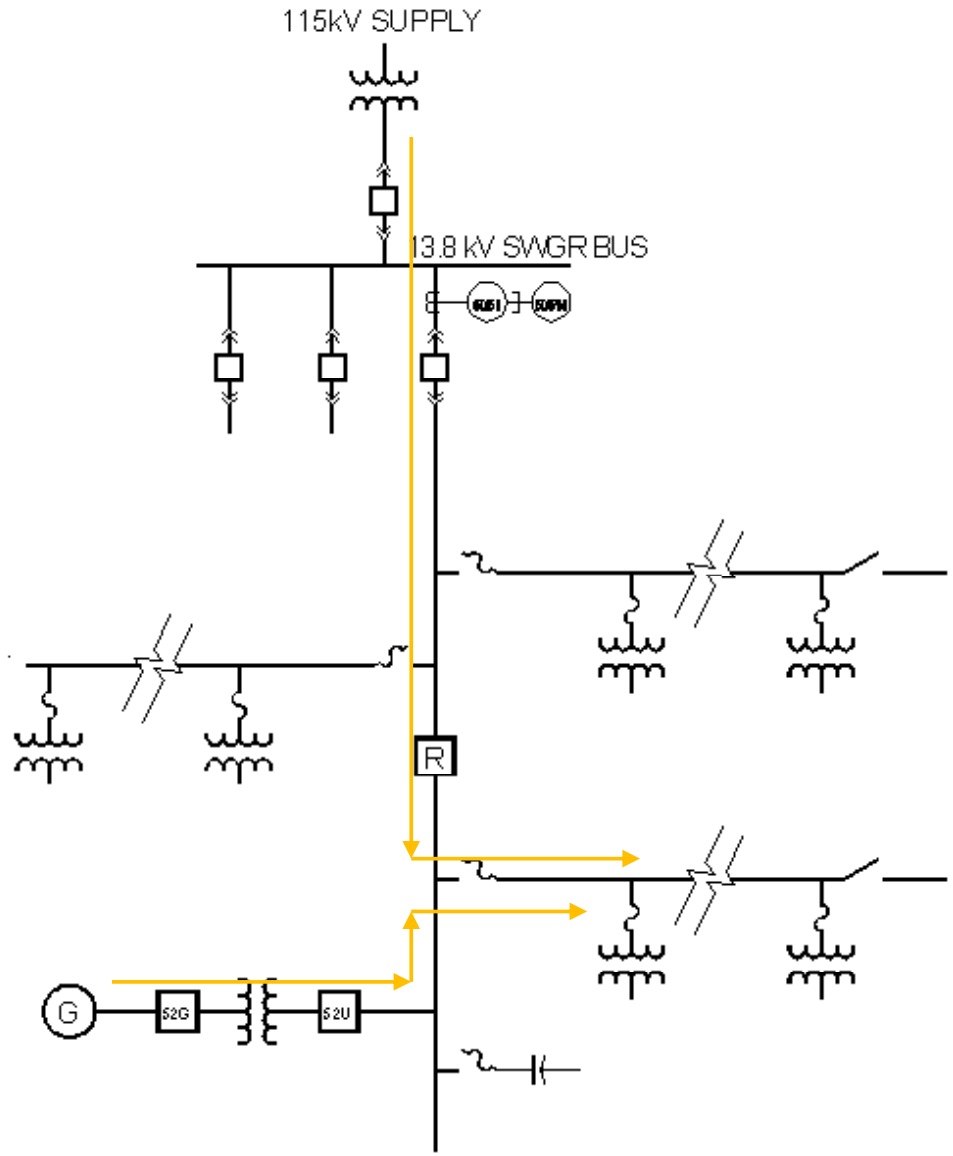

- Change Feeder Voltage Profile
- May affect capacitor & voltage regular control

Utility/Generator Perspective

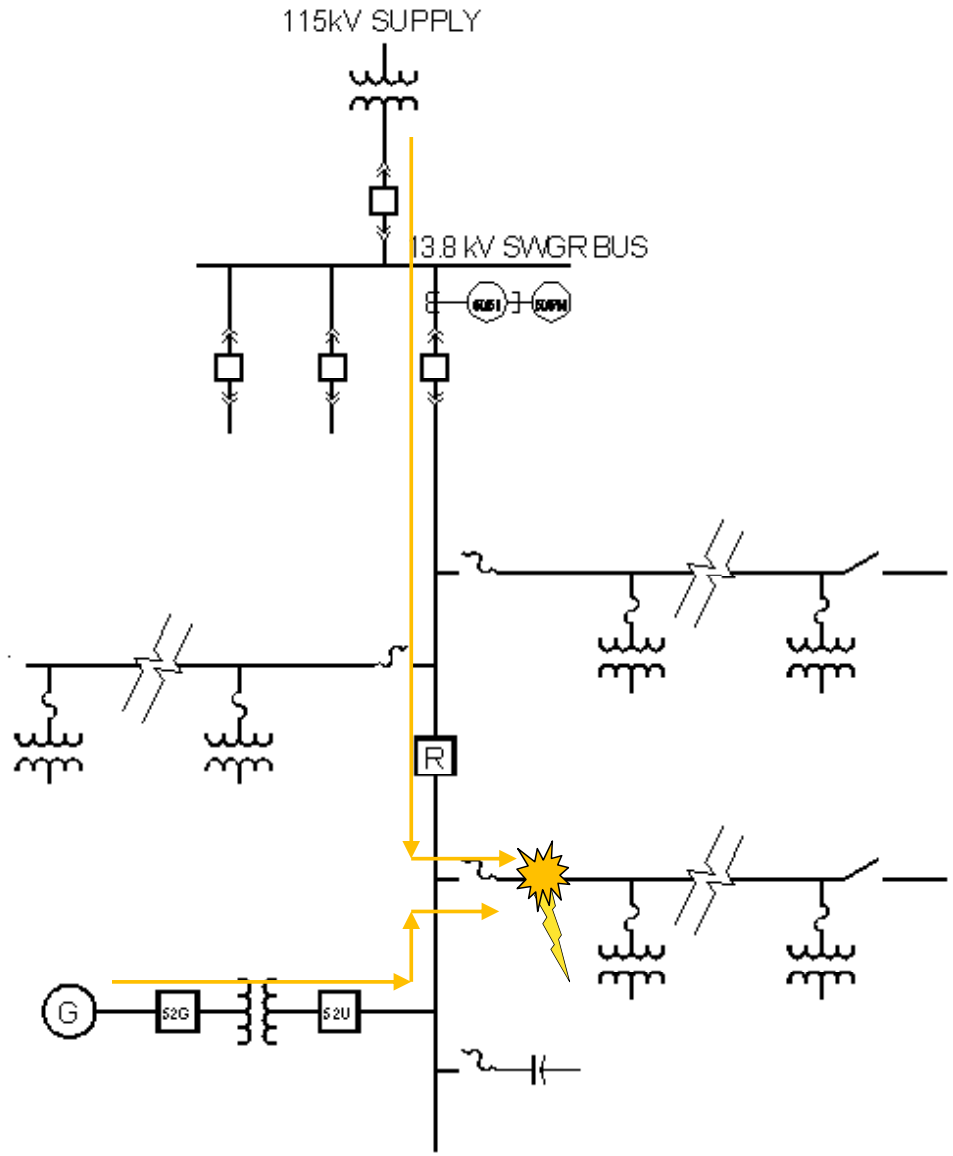

- Change Feeder Voltage Profile
- May affect capacitor & voltage regular control
- Will effect magnitude and distribution of fault currents
- Will Impact Overcurrent Device Coordination

Utility/Generator Perspective

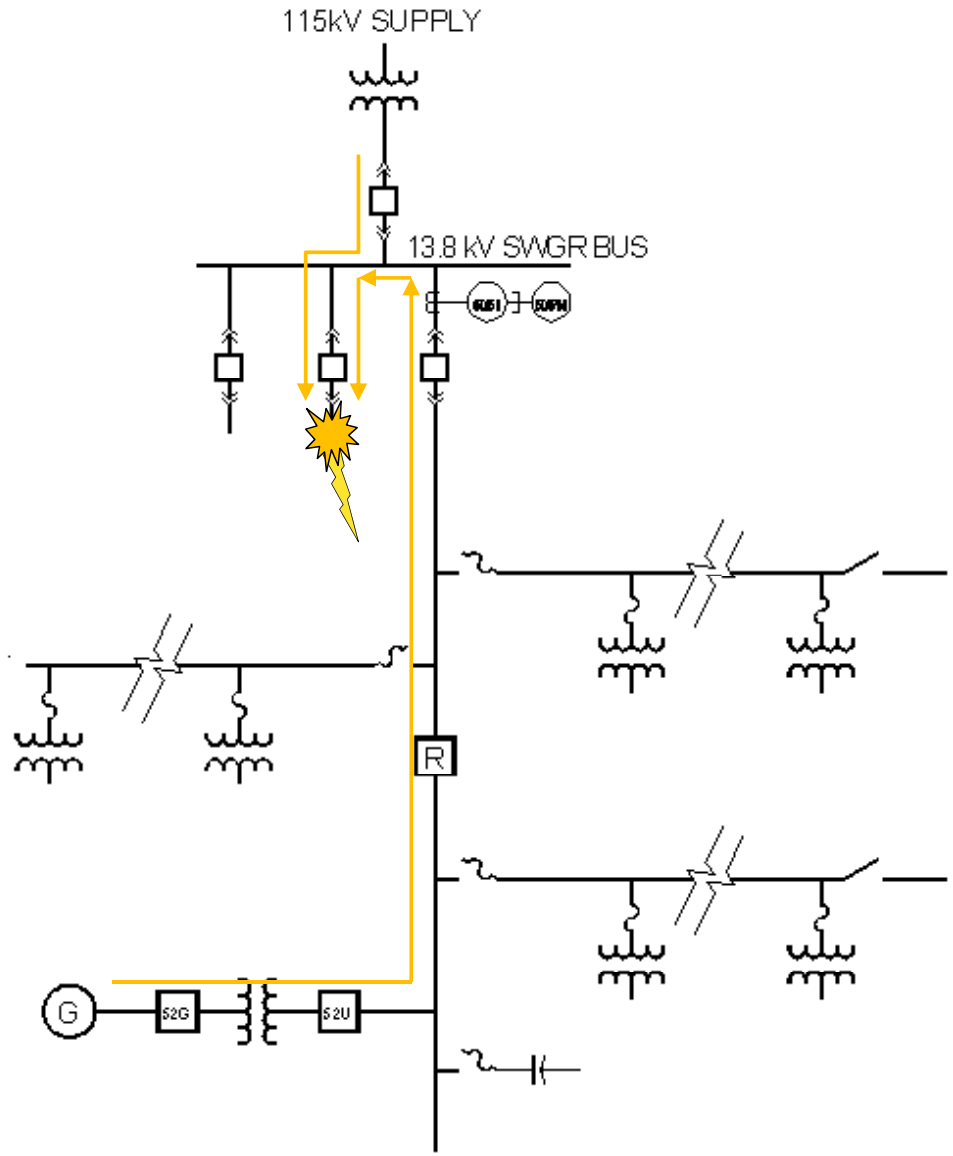

- Change Feeder Voltage Profile
- May affect capacitor & voltage regular control
- Will effect magnitude and distribution of fault currents
- Will Impact Overcurrent Device Coordination
- May cause sympathetic tripping

Utility/Generator Perspective

Generator Protection

- Focused on protection power production equipment
- For many DG applications, only the concern of the producer

Interconnection Protection

- Focused on protection of the utility power system
- Needs to utility grade or "certified"
- Needs to quickly disconnect the DG from the utility

Industry Standards

- IEEE 1547-2003
  IEEE Standard for Interconnecting Distributed Resources with Electric Power Systems
- Part of a series of standards and guides related to distributed power sources
- Does not address all aspects of interconnection
- More detail provided IEEE 1547.2 (Application Guide for IEEE 1547)
- Requirements vary between utilities – need to use their interconnection guidelines and documents

Industry Standards

- UL 1741
  Inverters, Converters, Controllers and Interconnection System Equipment for Use with Distributed Energy Resources
- For small, inverter based system, compliance with this standards simplifies interconnection process
- Name of the standard has changed as scope has evolved – original written for PV Inverters
- Most recent version has been harmonized with IEEE 1547 and 1547.1
- Deals with major concerns of islanding and voltage/frequency excursions detection

Other Industry Standards/Codes

- IEEE C37.90, *IEEE Standard for Relay Systems Associated with Electric Power Apparatus*
- IEEE C37.95, *IEEE Guide for Protective Relaying of Utility-Customer Interconnections*
- *IEEE Std. 519-1992, IEEE Recommended Practices and Requirements for Harmonic Control in Electrical Power Systems*
- *IEEE 1453-2004, IEEE Recommended Practice for Measurement and Limits of Voltage Fluctuations and Associated Light Flicker on AC Power Systems.*
- *IEEE C2-2007, National Electrical Safety Code*
- *NFPA 70, National Electric Code*

Protection Requirements for Interconnection

- Requirements dictated by individual utility
- Depends on size of DG and interconnection voltage
- Depends on the type of DG (Synchronous, Induction, Inverter)
- Export vs. Non-Export
- Depends on Transformer Connection
  - Some utilities specify the connection for DG
- Minimum Requirements specified in IEEE 1547 are for Voltage and Frequency Protection
  - Islanding
  - Protect utility system from fault contribution and transient voltage conditions caused by DG

DG Interconnection

Over and Under Voltage Setpoint/Timing

Table 1—Interconnection system response to abnormal voltages

Voltage range (% of base voltage[a])	Clearing time(s)[b]
V< 50	0.16
50 ≤ V< 88	2.00
110 < V < 120	1.00
V ≥ 120	0.16

[a]Base voltages are the nominal system voltages stated in ANSI C84.1-1995, Table 1.
[b]DR ≤ 30 kW, maximum clearing times; DR > 30kW, default clearing times.

Source: IEEE Standard 1547-2003

DG Interconnection

Over and Under Frequency Setpoint/Timing

Table 2—Interconnection system response to abnormal frequencies

DR size	Frequency range (Hz)	Clearing time(s)[a]
≤ 30 kW	> 60.5	0.16
	< 59.3	0.16
> 30 kW	> 60.5	0.16
	< {59.8 – 57.0} (adjustable set point)	Adjustable 0.16 to 300
	< 57.0	0.16

[a]DR ≤ 30 kW, maximum clearing times; DR > 30 kW, default clearing times.

Source: IEEE Standard 1547-2003

DG Interconnection

Over and Under Frequency Setpoint/Timing

NPCC PRC-006 Requirements

"During system conditions where local area load exceeds system generation, NPCC Emergency Operation Criteria requires a program of phased automatic under frequency load shedding of up to 25% of area load to assist in arresting frequency decay and to minimize the possibility of system collapse.

Depending on the point of connection of the Facility to the Company's EPS and in conformance with the NPCC Emergency Operating Criteria, ***the Facility may be required to remain connected to the EPS during the frequency decline to allow the objectives of the automatic load shedding program to be achieved*** …"

Source – National Grid Standards For Interconnecting Distributed Generation – 12/1/09

DG Interconnection

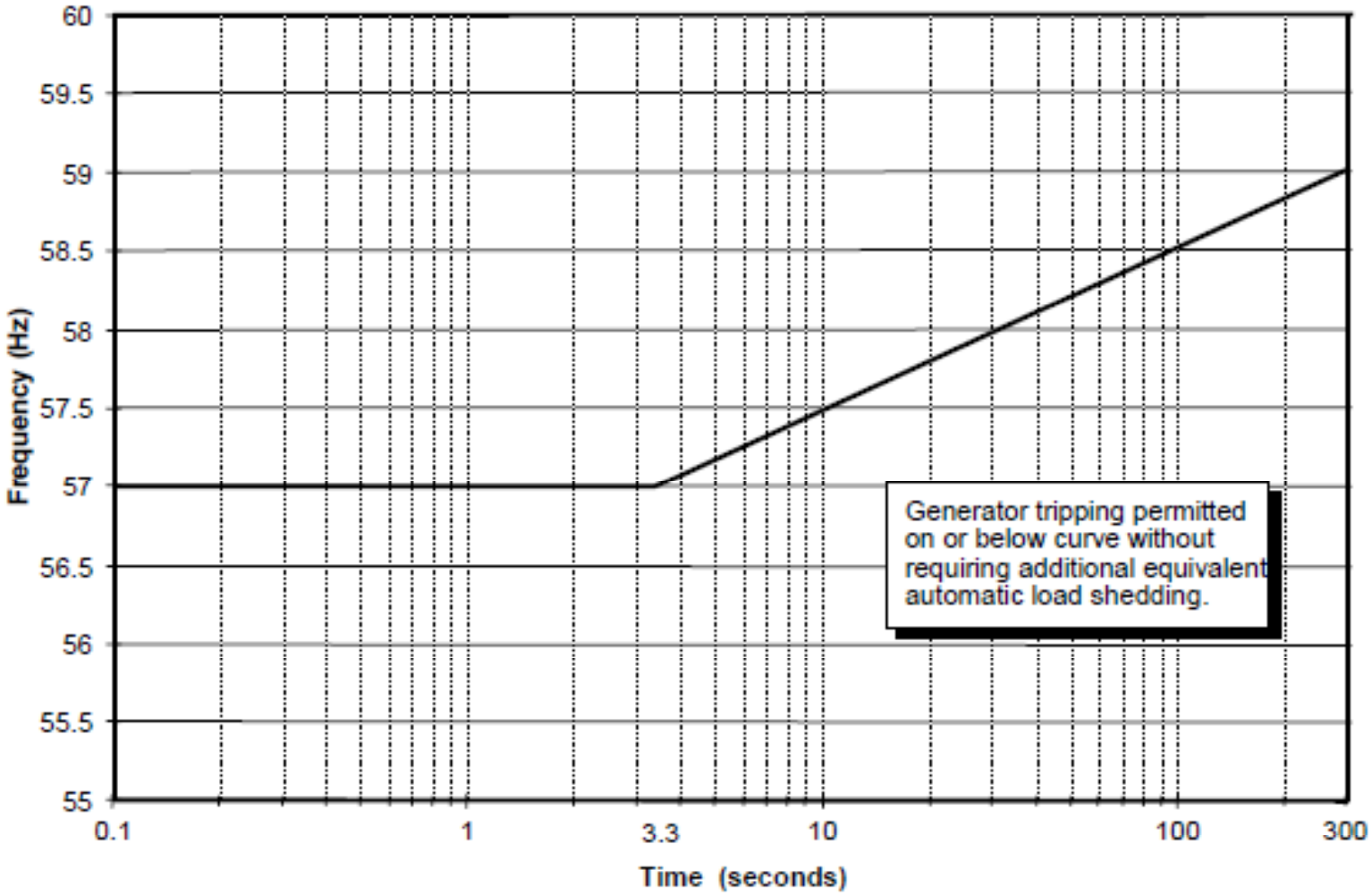

Source: NPCC Document A-03

Protection Requirements for Interconnection

- Typical protection for a small (<25 kW) PV installation

ANSI Device	Function
27	Under Voltage
59	Over Voltage
81o	Over Frequency
81u	Under Frequency

Protection Requirements for Interconnection

- Typical protection for a small (<100 kW) induction generator

ANSI Device	Function
27	Under Voltage
59	Over Voltage
59GI/59GT	Inst and Time Overvoltage Ground Relay
59I	Instantaneous Overvoltage Relay
81o	Over Frequency
81u	Under Frequency

DG Interconnection

Sync Check Window

Table 5—Synchronization parameter limits for synchronous interconnection to an EPS, or an energized local EPS to an energized Area EPS

Aggregate rating of DR units (kVA)	Frequency difference (Δf, Hz)	Voltage difference (ΔV, %)	Phase angle difference (ΔΦ, °)
0 – 500	0.3	10	20
> 500 – 1 500	0.2	5	15
> 1 500 – 10 000	0.1	3	10

Source: IEEE Standard 1547-2003

Protection Requirements for Interconnection

- Typical protection for a medium sized synchronous generator

ANSI Device	Function
25	Sync Check
27	Under Voltage
32	Reverse Power
46	Negative Sequence Overcurrent
47	Voltage Phase Sequence
51V	Voltage Restrained Overcurrent
50/51N	Neutral Inst and Time Overcurrent
50/51G	Ground Inst and Time Overcurrent
59	Over Voltage
59G	Ground Overvoltage Relay
81o	Over Frequency
81u	Under Frequency
87	Differential

Transformer Connections

- Typical Utility Distribution Circuit in US
  - 4.16kV to 34.5 kV
  - Multi-grounded 4 wire system to Feed Distribution Transformers Connected Phase to Neutral
  - System Ground Reference Provided by Grounded Wye Connection of Station Transformer
- Under Fault Conditions and a DG on a Distribution Feeder, the Winding Configuration of the Customer/DG Transformer can have a Big Impact on the Feeder Protection ***(and DG grounding too!)***

DG Interconnection

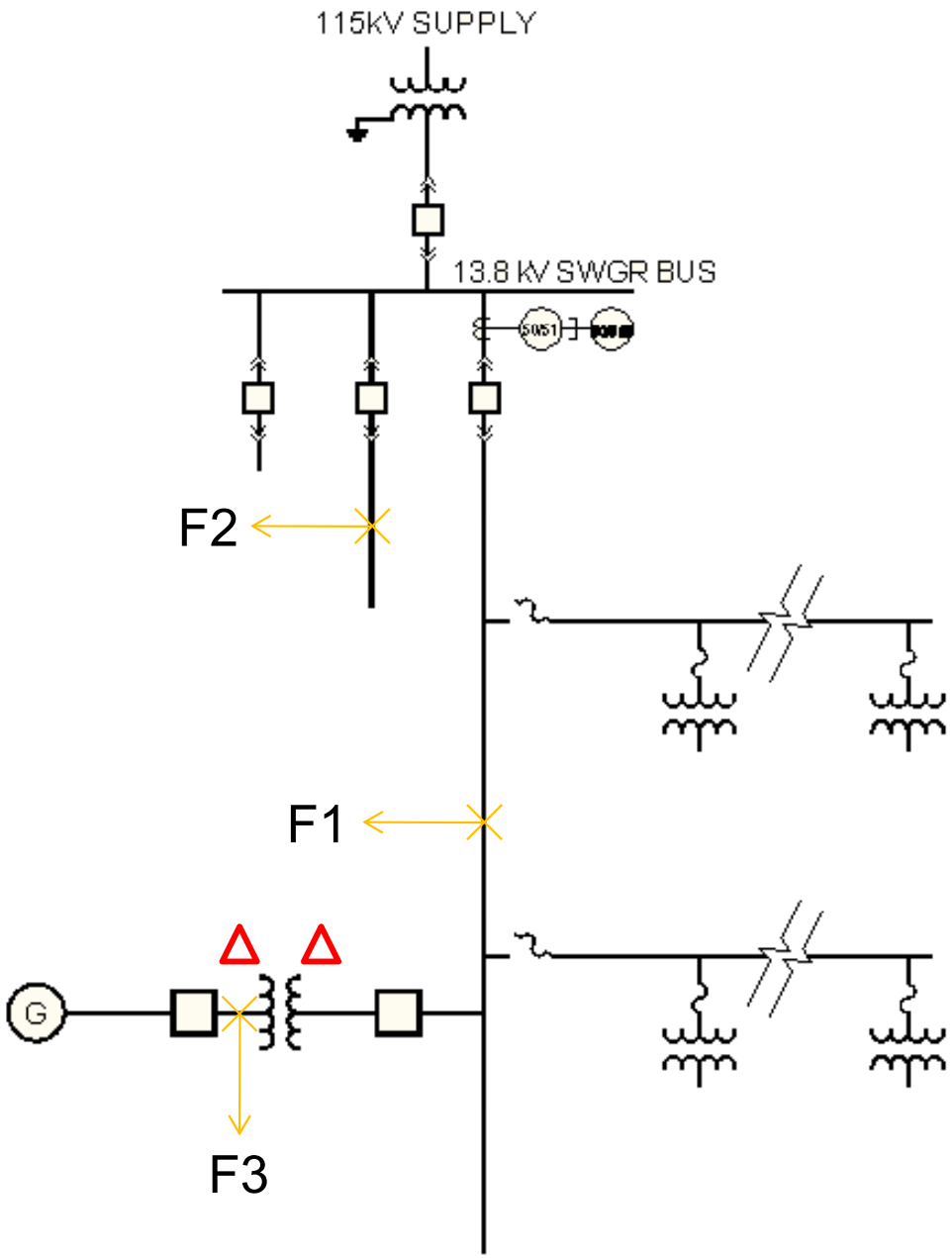

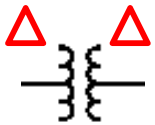

Advantages

- Provides No Ground Current for Faults at F1 and F2
- Feeder Ground Fault Relaying will not Respond to Fault at F3

Disadvantages

- Can supply feeder from an ungrounded source if Feeder Breaker Opens, potentially causing overvoltages for other customers – particularly under ground fault conditions.

Protection

- Install Zero Sequence PT's (Grounded Wye-Open Delta)
- Detect Ground Faults with 59G (Ground Overvoltage) Relay

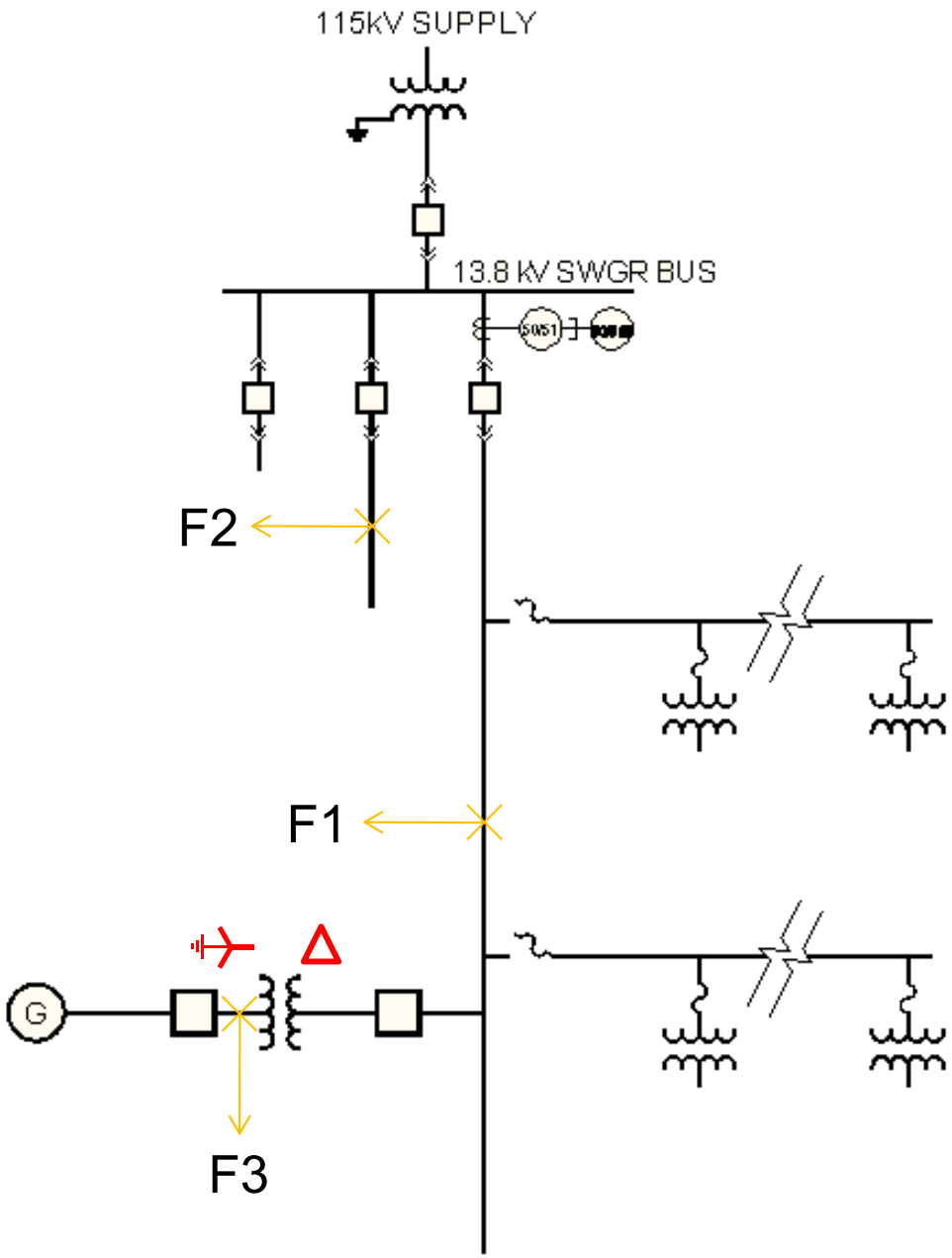

DG Interconnection

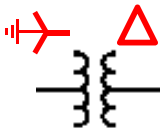

Advantages

- Provides No Ground Current for Faults at F1 and F2
- Feeder Ground Fault Relaying will not Respond to Fault at F3

Disadvantages

- Can supply feeder from an ungrounded source if Feeder Breaker Opens, potentially causing overvoltages for other customers – particularly under ground fault conditions.
- High ground Fault current into DG

Protection

- Install Zero Sequence PT's (Grounded Wye-Open Delta)
- Detect Ground Faults with 59G (Ground Overvoltage) Relay

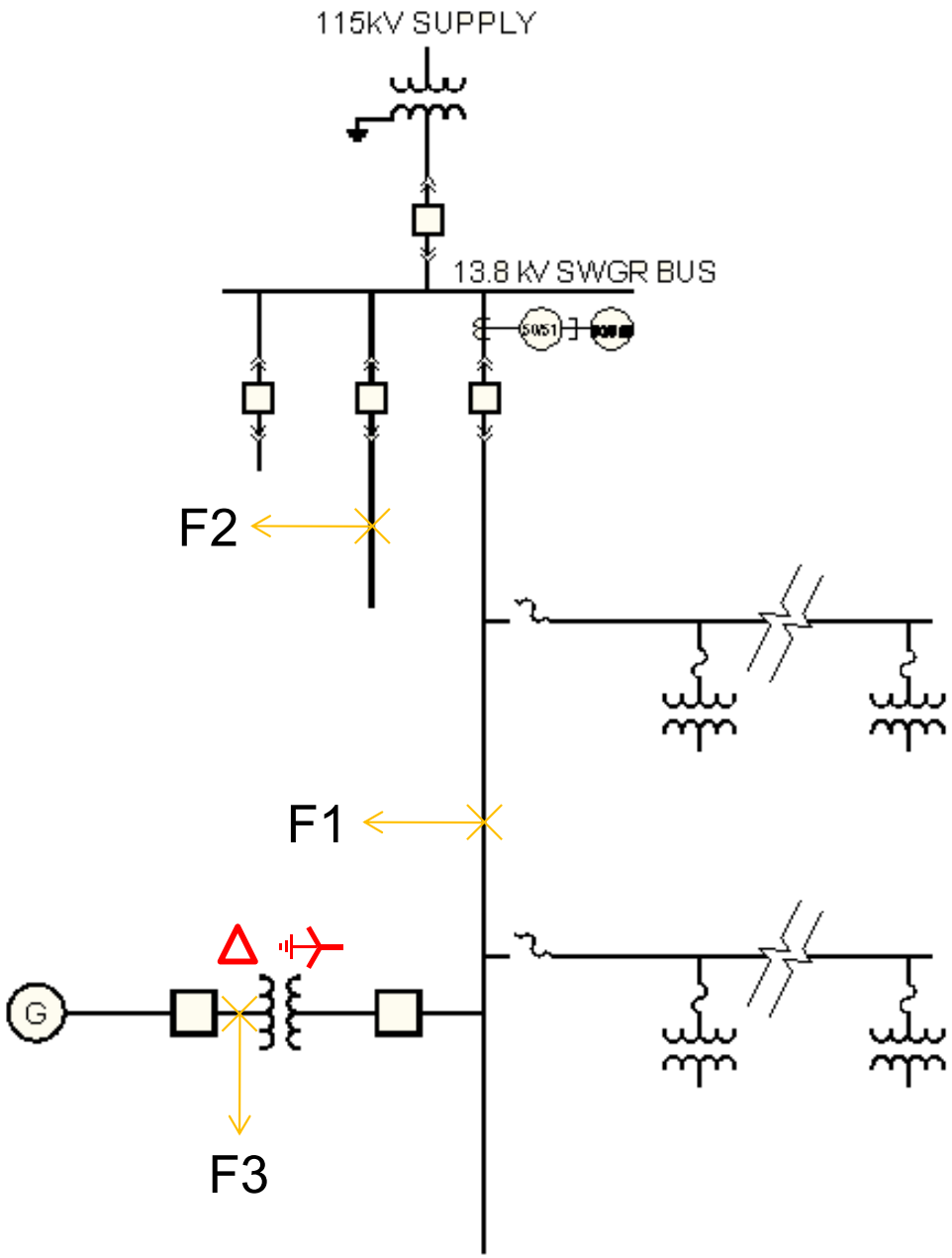

DG Interconnection

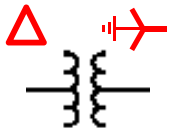

Advantages

- No Overvoltages for Fault at F1
- Can relay transformer neutral to detect fault current and clear ground fault contributions for Fault at F1

Disadvantages

- Ground Current Source for Faults at F1 and F2, weak infeed even when DG is off-line – effects ground relay coordination on all substation breakers
- DG relaying will see unbalanced currents utility system
- Circulating currents in delta due to unbalanced currents

Protection

- Install CT in transformer neutral with overcurrent relay or
- Install overcurrent relay in CT neutral return path

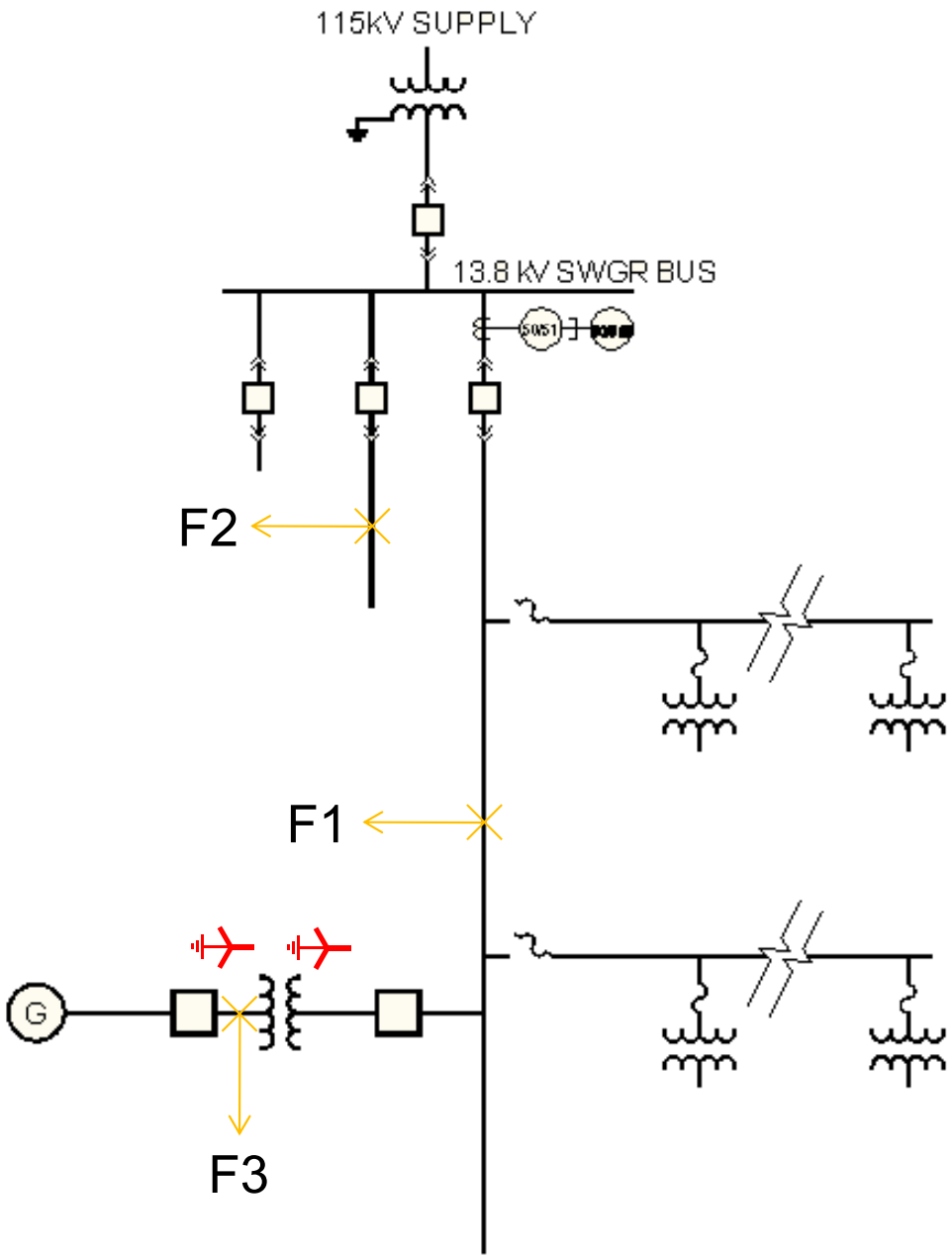

DG Interconnection

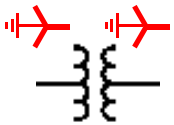

Advantages

- No Overvoltages for Fault at F1
- Can relay transformer neutral to detect fault current and clear ground fault contributions for Fault at F1

Disadvantages

- Ground Current Source for Faults at F1 and F2, weak infeed even when DG is off-line – effects ground relay coordination on all substation breakers
- DG relaying will see unbalanced currents utility system
- Feeder Protection will see faults at F3

Protection

- Install CT in transformer neutral with overcurrent relay or
- Install overcurrent relay in CT neutral return path

Transformer Connections

- Many utilities like to see Grounded Wye connection on utility side of transformer to limit overvoltages on feeder/system ground faults.
- If secondary is delta connected, circulating currents due to utility unbalanced current can be mitigated with neutral grounding resistor or reactor.
- Need to consider criteria for effective grounding:
  - $X0/X1 \leq 3$ and $R0/X1 \leq 1$

Effectively Grounded System

- X0/X1 ≤ 3 and R0/X1 ≤ 1

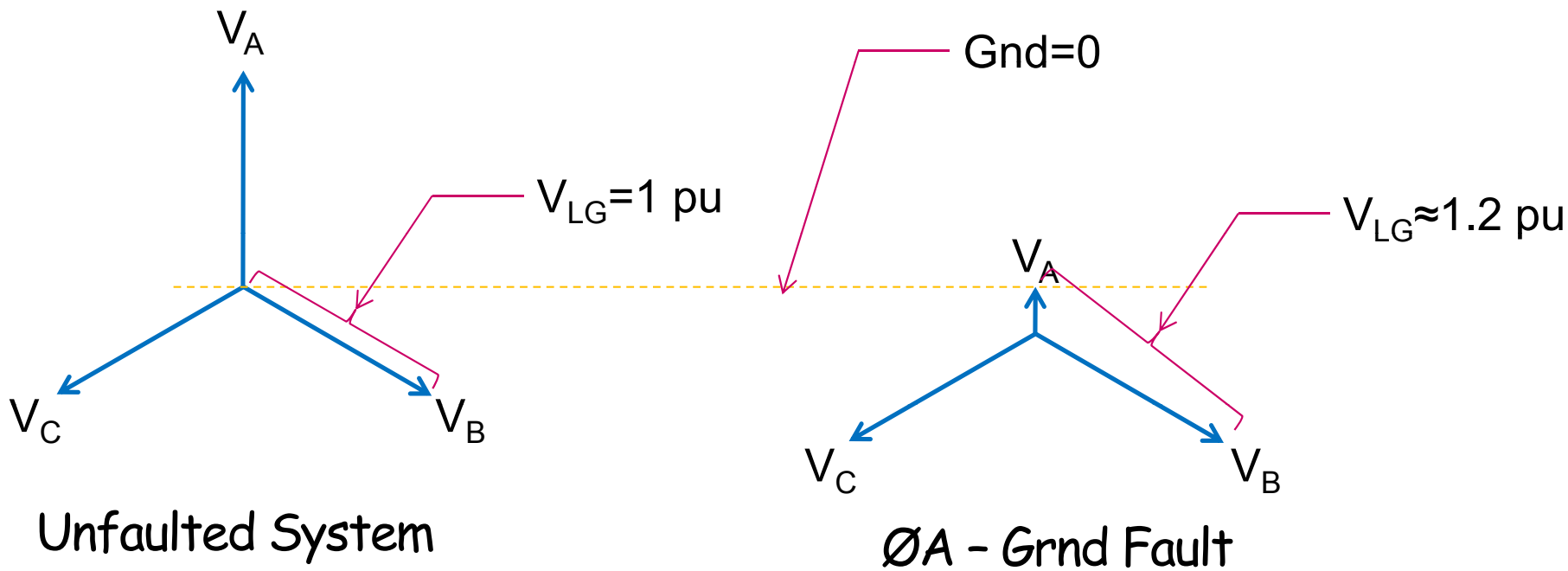

Ungrounded System

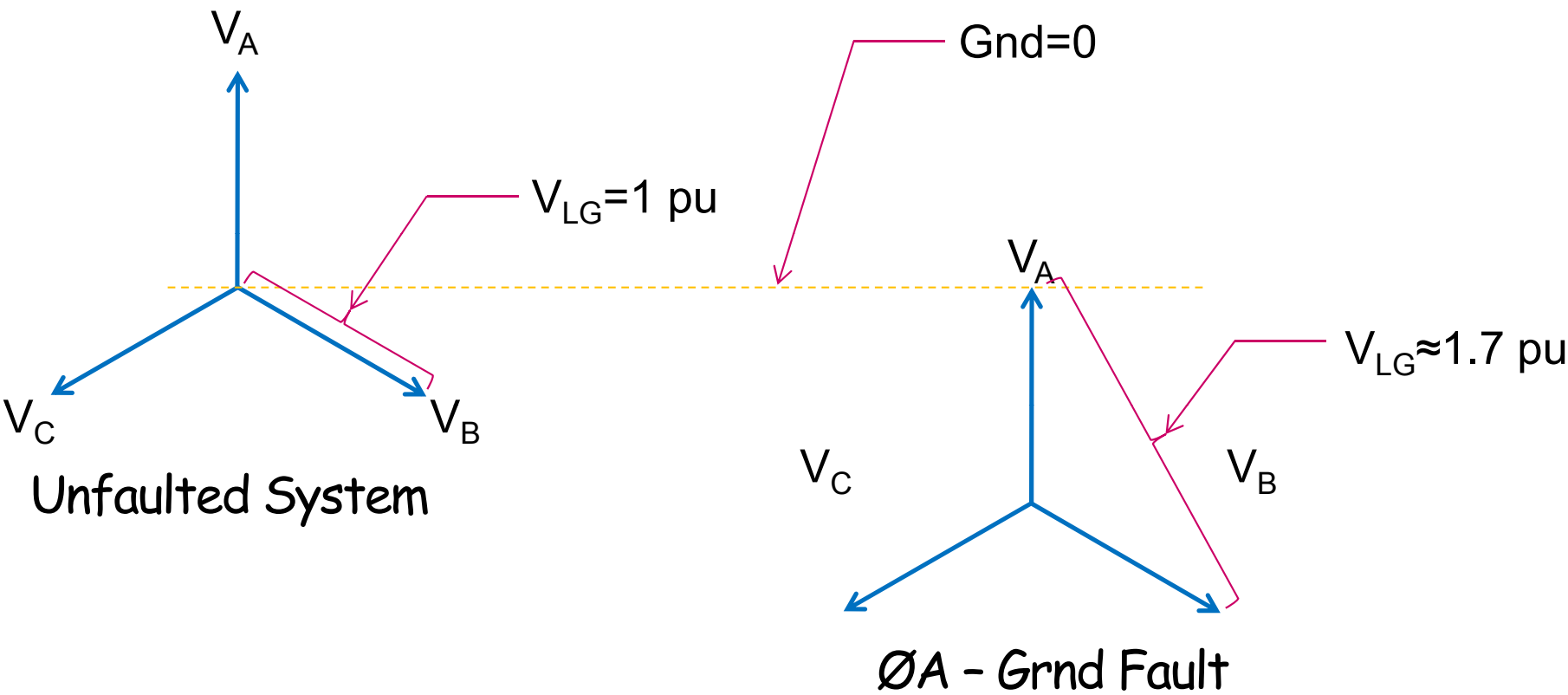

DG Interconnection

Primary Ground Fault Protection

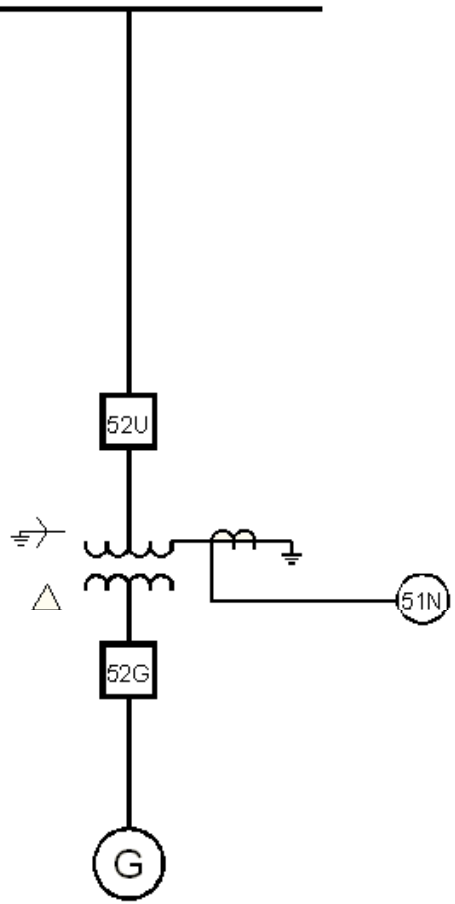

Effectively Grounded

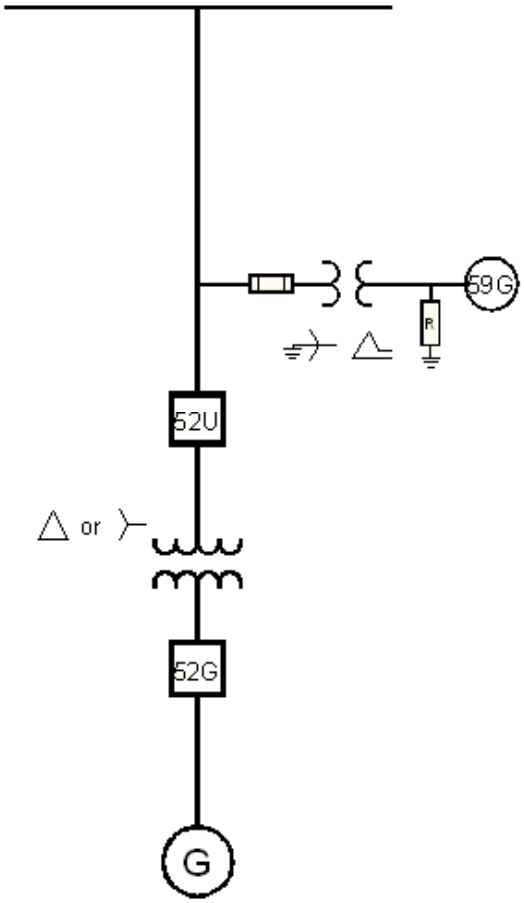

Ungrounded

DG Interconnection

Directional Power Relaying

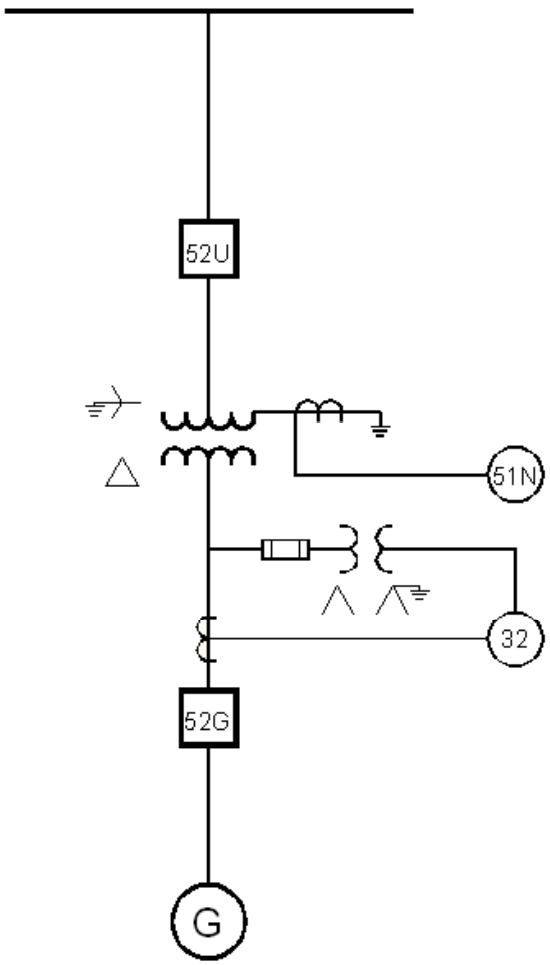

Typically employed on rotating machines to protect prime mover from motoring

Applied to prevent backfeed to utility system for non-export interconnections.

Used for Islanding Detection under California Rule 21 for non-export configuration

↑ 32R – Set for excitation power of interconnection transformer

↓ 32F – Low Forward Power – set for 5% of DG KVA w/ 2 second delay

DG Interconnection

Anti Islanding w/ Export

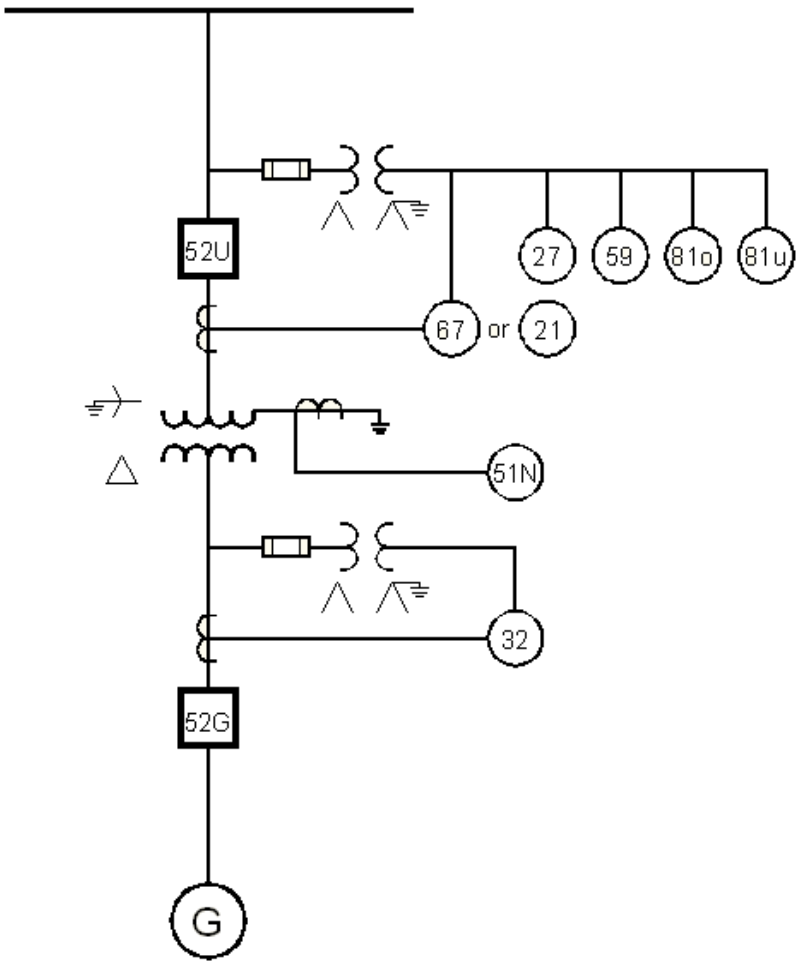

Harder to detect islanding since power flow to the utility is normal

Problematic if Feeder Load and DG Export Capability are Close

Voltage and/or frequency relays may not detect condition fast enough for utility reclosing

Reverse Power Relay (32R) may be an option but has to be set above maximum export

Phase (67) and Ground (67G) Directional Overcurrent or even Distance (21) relays may be used to detect faults

May need to consider Transfer Trip from Utility

DG Interconnection

Transfer Trip

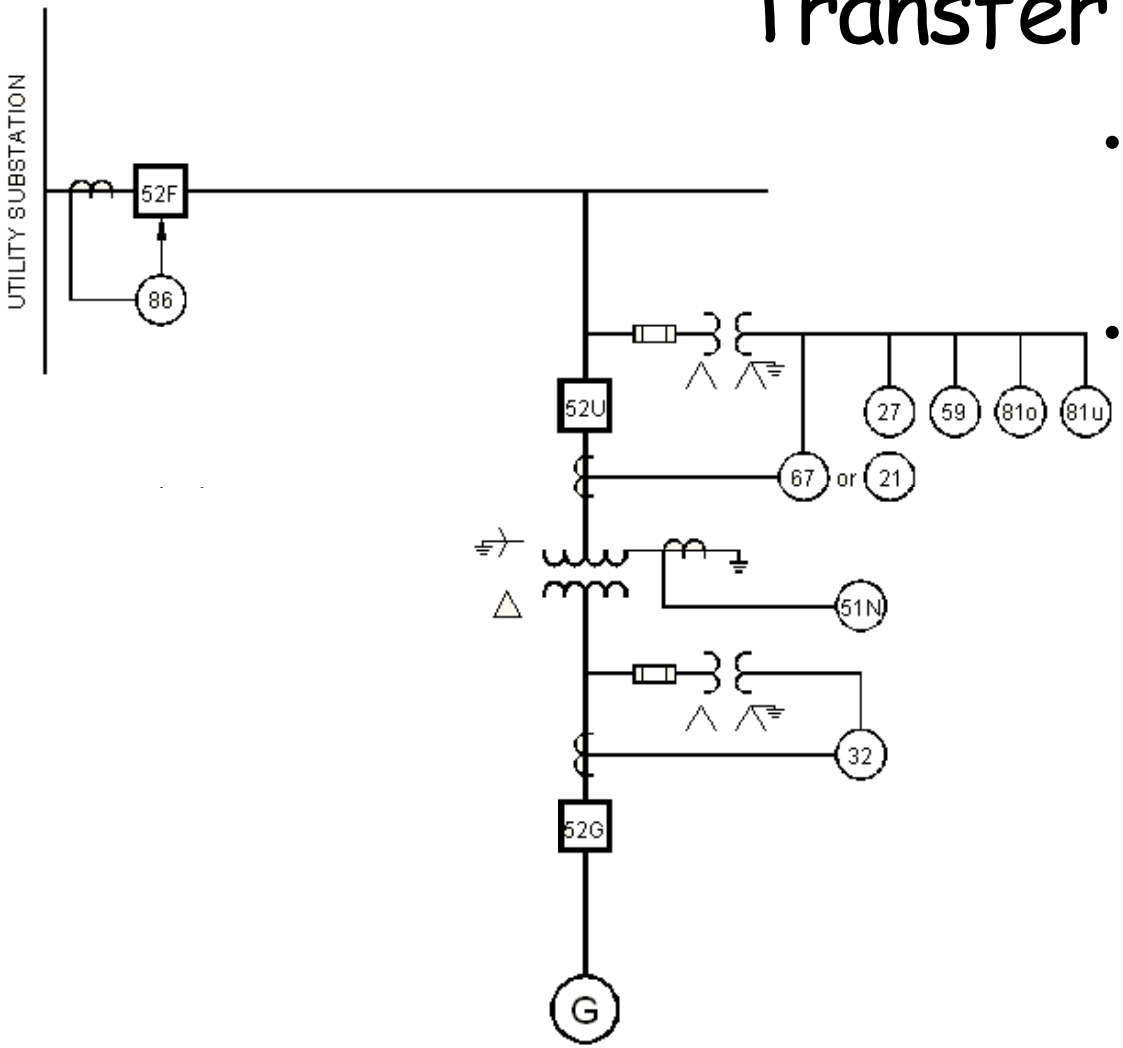

- May be required to reliably disconnect DG from system to prevent islanding or interference with reclosing
- Trip signal sent from utility substation to DG via communications link
  - Radio
  - Microwave
  - Direct Fiber
  - Leased Line
  - Hardwire

DG Interconnection

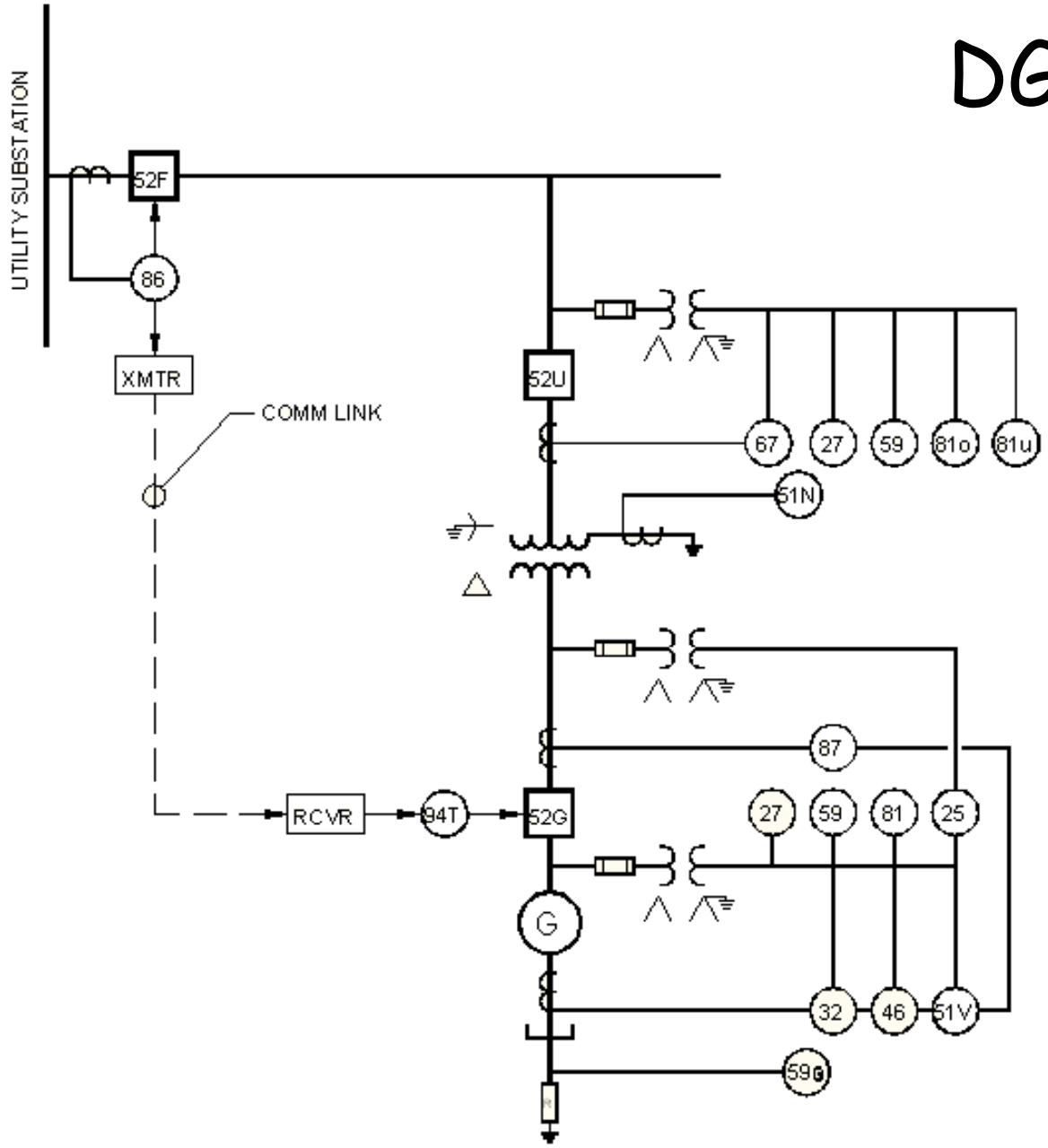

DG Interconnection

DG Interconnection

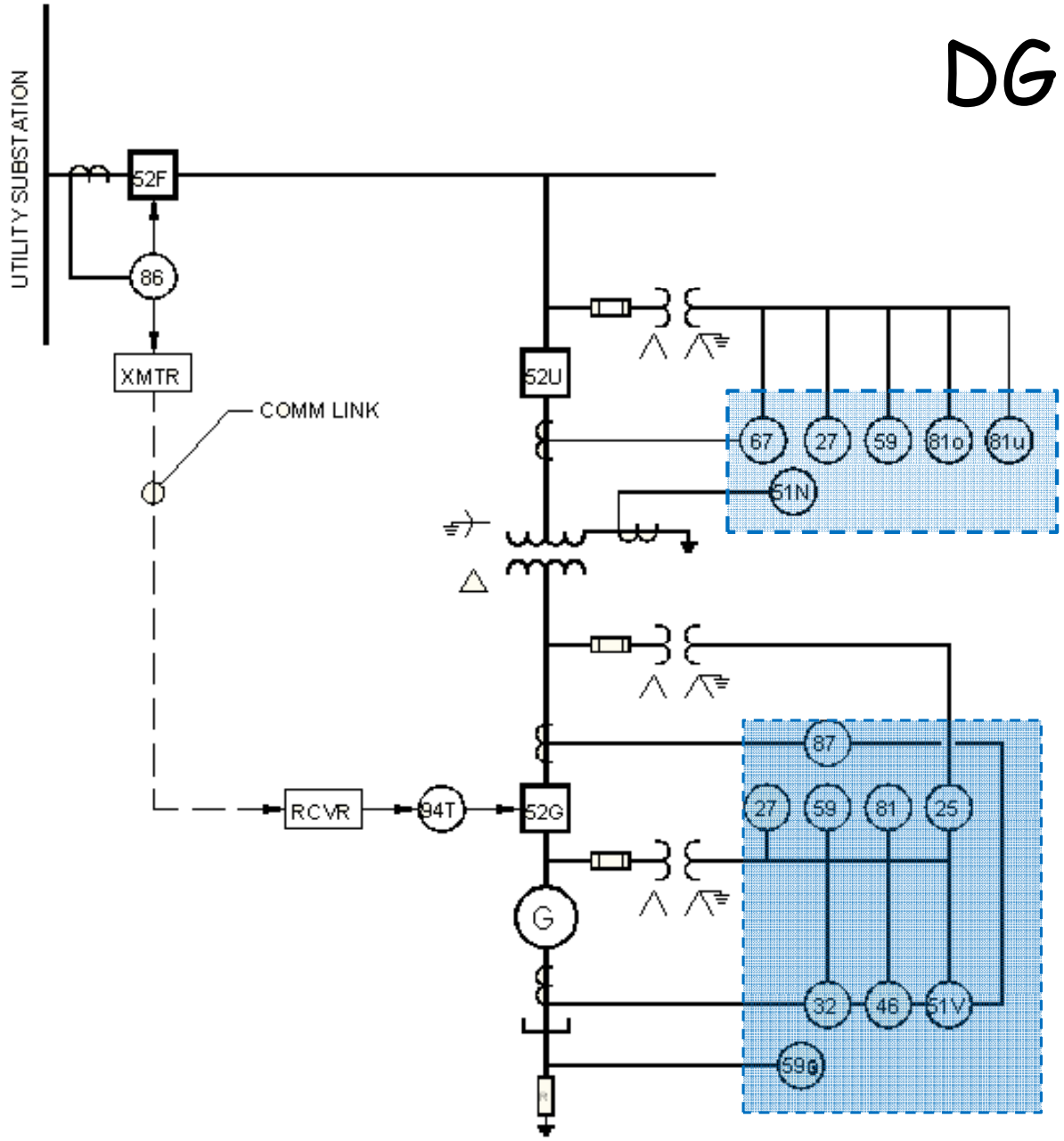

DG Interconnection

Basler

General Electric

Schweitzer

ABB

Beckwith

Siemens

DG Interconnection

Power Quality

Voltage Flicker

- Fluctuation in system voltage that result in observable changes in light output
- IEEE 1547 states The DR shall not create objectionable flicker for other customers

Harmonics

Table 3—Maximum harmonic current distortion in percent of current (I)[a]

Individual harmonic order h (odd harmonics)[b]	$h < 11$	$11 \leq h < 17$	$17 \leq h < 23$	$23 \leq h < 35$	$35 \leq h$	Total demand distortion (TDD)
Percent (%)	4.0	2.0	1.5	0.6	0.3	5.0

[a] I = the greater of the Local EPS maximum load current integrated demand (15 or 30 minutes) without the DR unit, or the DR unit rated current capacity (transformed to the PCC when a transformer exists between the DR unit and the PCC).

[b] Even harmonics are limited to 25% of the odd harmonic limits above.

Source: IEEE Standard 1547-2003

Summary

- Concern over climate change, the emphasis on going “green”, and government mandated Renewable Energy Goals are driving increased interest in DG
- Much of the new “generation” is coming from inverter connected sources like wind and solar.
- Much of the new “generation” is being interconnected to the utility distribution system.
- Utility distribution systems were designed as radial systems
- Introduction of DG on these systems is challenging many utilities throughout the US
- Standards like IEEE 1547 were intended to aid simplify the interconnection process but can’t address all possible configurations and scenarios
- Likely to be more significant technical as well as commercial and legal issues as penetration of DG the distribution system increases.
- Advances in relay and communications technology have eased some of the technical challenges but others remain.

Questions?

Scott R. Secrest, PE
Vice President
Technical Business Development
Three-C Engineering Services
508-881-3911
scott@three-c.com