GETTING STARTED GUIDE

PXIe-5775

12-Bit, 6.4 GS/s, 2-Channel PXI FlexRIO Digitizer

Note Before you begin, install and configure your chassis and controller.

This document explains how to install, configure, test, and use the PXIe-5775. You can program the PXIe-5775 with the following software options.

- FlexRIO Support driver software
- NI LabVIEW Instrument Design Libraries for FlexRIO (instrument design libraries)

Note Adapter modules are not installable or interchangeable on PXIe-5775 devices.

Caution This icon denotes a caution, which advises you to consult documentation where this symbol is marked.

Contents

FlexRIO Documentation and Resources....2
Verifying the System Requirements....2
Unpacking the Kit....3
PXIe-5775 Kit Contents....3
Preparing the Environment....4
Installing the Software and Driver....4
Installing the PXIe-5775....5
PXIe-5775 Front Panel and Pinout....6
Configuring the PXIe-5775 in MAX....9
FlexRIO Examples....10
    Accessing FlexRIO Examples....10
Block Diagram....10
Component-Level Intellectual Property (CLIP)....12
Making a Measurement....12
    Making a Measurement with LabVIEW....12
Troubleshooting....13
    What Should I Do if the PXIe-5775 Doesn't Appear in MAX?....13
    What Should I Do if the PXIe-5775 Fails the Self-Test?....13
Where to Go Next....13
Worldwide Support and Services....14

NATIONAL INSTRUMENTS™

FlexRIO Documentation and Resources

Table 1. FlexRIO Documentation and Resources

Document/Resource	Location	Description
PXIe-5775 Getting Started Guide (this document)	Available from the Start menu and at *ni.com/manuals*.	Contains installation instructions and basic programming instructions for your PXIe-5775.
PXIe-5775 Specifications	Available from the Start menu and at *ni.com/manuals*.	Contains specifications for your PXIe-5775.
LabVIEW FPGA Module Help	Embedded in *LabVIEW Help* and at *ni.com/manuals*.	Contains information about the basic functionality of the LabVIEW FPGA Module.
FlexRIO Help	Available from the Start menu and at *ni.com/manuals*.	Contains information about the FPGA module front panel connectors and I/O, programming instructions, and I/O component-level IP (CLIP).
LabVIEW Examples	Available in NI Example Finder. In LabVIEW, click **Help»Find Examples» Hardware Input and Output»FlexRIO**.	Contains examples of how to run FPGA VIs and Host VIs on your device.
IPNet	Located at *ni.com/ipnet*.	Contains LabVIEW FPGA functions and intellectual property to share.
FlexRIO product page	Located at *ni.com/flexrio*.	Contains product information and data sheets for FlexRIO devices.

Verifying the System Requirements

To use the PXIe-5775, your system must meet certain requirements. For more information about minimum system requirements, recommended system, and supported application development environments (ADEs), refer to the readme, which is available on the software media or online at *ni.com/updates*.

Unpacking the Kit

Notice To prevent electrostatic discharge (ESD) from damaging the device, ground yourself using a grounding strap or by holding a grounded object, such as your computer chassis.

1. Touch the antistatic package to a metal part of the computer chassis.
2. Remove the device from the package and inspect the device for loose components or any other sign of damage.

   Notice Never touch the exposed pins of connectors.

   Note Do not install a device if it appears damaged in any way.

3. Unpack any other items and documentation from the kit.

Store the device in the antistatic package when the device is not in use.

PXIe-5775 Kit Contents

The following items are included in the device kit:

- The PXIe-5775
- The FlexRIO driver software media
- Documentation:
  - *Maintain Forced-Air Cooling Note to Users*
  - *PXIe-5775 Getting Started Guide* (this document)

Preparing the Environment

Ensure the environment in which you are using the PXIe-5775 meets the following specifications.

Operating environment	
Ambient temperature range	0 °C to 55 °C[1] (Tested in accordance with IEC-60068-2-1 and IEC-60068-2-2. Meets MIL-PRF-28800F Class 3 low temperature limit and MIL-PRF-28800F Class 2 high temperature limit.)
Relative humidity range	10% to 90%, noncondensing (Tested in accordance with IEC 60068-2-56.)
Maximum altitude	2,000 m (800 mbar) (at 25 °C ambient temperature)
Pollution Degree	2

Indoor use only.

Note For complete specifications, refer to the specifications document for your device at *ni.com/manuals*.

Installing the Software and Driver

Before installing your hardware, you must install the application software and instrument driver. Visit *NI FlexRIO Driver Supported Versions for FlexRIO Adapters and Modules* to determine which minimum software versions you need for your device. Install the software in the following order:

1. Install LabVIEW.

   Refer to the *LabVIEW Installation Guide* for installation instructions for LabVIEW and system requirements for the LabVIEW software. Refer to the *LabVIEW Upgrade Notes* for additional information about upgrading to the most recent version of LabVIEW for Windows. Documentation for LabVIEW is available at *ni.com/manuals*.

2. Install the LabVIEW FPGA Module.

   Refer to the *LabVIEW FPGA Module Release and Upgrade Notes* for installation instructions and information about getting started with the LabVIEW FPGA Module. Documentation for the LabVIEW FPGA Module is available at *ni.com/manuals*.

3. (Optional) Install the LabVIEW Real-Time Module.

[1] The PXIe-5775 requires a chassis with slot cooling capacity ≥58 W. Not all chassis with slot cooling capacity ≥58 W can achieve this ambient temperature range. Refer to the *PXI Chassis Manual* for specifications to determine the ambient temperature ranges your chassis can achieve.

Refer to the *LabVIEW Real-Time Module Release and Upgrade Notes* for system requirements, installation instructions, and additional information about using the LabVIEW Real-Time Module.

4. Install FlexRIO.

   Refer to the *FlexRIO Readme* for system requirements and installation instructions for FlexRIO. Documentation for FlexRIO is available at *ni.com/manuals*.

Installing the PXIe-5775

Notice To prevent damage to the PXIe-5775 caused by ESD or contamination, handle the module using the edges or the metal bracket.

1. Ensure the AC power source is connected to the chassis before installing the module.

   The AC power cord grounds the chassis and protects it from electrical damage while you install the module.

2. Power off the chassis.
3. Inspect the slot pins on the chassis backplane for any bends or damage prior to installation. Do not install a module if the backplane is damaged.
4. Remove the black plastic covers from all the captive screws on the module front panel.
5. Identify a supported slot in the chassis. The following figure shows the symbols that indicate the slot types.

Figure 1. Chassis Compatibility Symbols

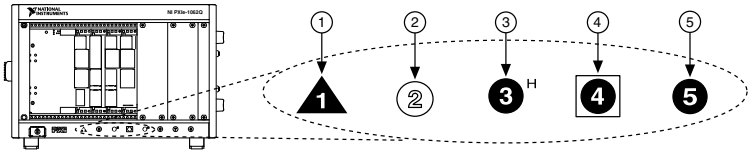

1. PXI Express System Controller Slot
2. PXI Peripheral Slot
3. PXI Express Hybrid Peripheral Slot
4. PXI Express System Timing Slot
5. PXI Express Peripheral Slot

   PXIe-5775 modules can be placed in PXI Express peripheral slots, PXI Express hybrid peripheral slots, or PXI Express system timing slots.

6. Touch any metal part of the chassis to discharge static electricity.
7. Ensure that the ejector handle is in the downward (unlatched) position.
8. Place the module edges into the module guides at the top and bottom of the chassis. Slide the module into the slot until it is fully inserted.

Figure 2. Module Installation

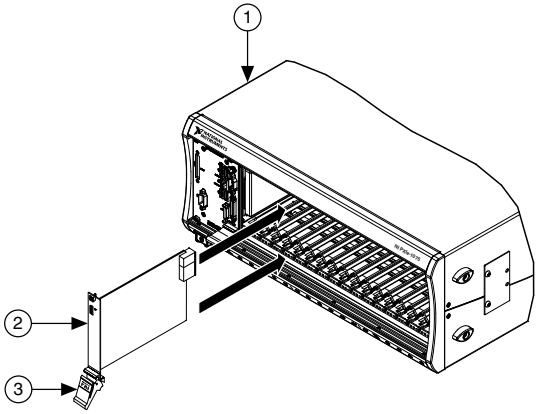

1. Chassis
2. Hardware Module
3. Ejector Handle in Downward (Unlatched) Position

9. Latch the module in place by pulling up on the ejector handle.
10. Secure the module front panel to the chassis using the front-panel mounting screws.

Note Tightening the top and bottom mounting screws increases mechanical stability and also electrically connects the front panel to the chassis, which can improve the signal quality and electromagnetic performance.

11. Cover all empty slots using EMC filler panels or fill using slot blockers to maximize cooling air flow, depending on your application.
12. Power on the chassis.

PXIe-5775 Front Panel and Pinout

PXIe-5775 Front Panel

The following figure shows the PXIe-5775 front panel.

Figure 3. PXIe-5775 Front Panel

The following table describes the signal connections for the PXIe-5775.

Connector	Description	Function
DIO	Molex Nano-Pitch DIO connector	Multi-signal DIO connector that provides access to FPGA multi-gigabit transceivers (MGTs) and general-purpose LVCMOS signals.
AI 0	Standard SMA female connector	Analog input connection.
AI 1		
REF/CLK IN	Standard SMA female connector	Input for an external Reference Clock or Sample Clock.

Digital I/O Pinout

The following figure shows the Digital I/O (DIO) connector pinout.

Figure 4. Digital I/O Connector

Reserved	A1	B1	5 V
GND	A2	B2	GND
MGT Rx+ 0	A3	B3	MGT Tx+ 0
MGT Rx– 0	A4	B4	MGT Tx– 0
GND	A5	B5	GND
MGT Rx+ 1	A6	B6	MGT Tx+ 1
MGT Rx– 1	A7	B7	MGT Tx– 1
GND	A8	B8	GND
DIO 4	A9	B9	DIO 6
DIO 5	A10	B10	DIO 7
GND	A11	B11	GND
DIO 0	A12	B12	DIO 2
DIO 1	A13	B13	DIO 3
GND	A14	B14	GND
MGT Rx+ 2	A15	B15	MGT Tx+ 2
MGT Rx– 2	A16	B16	MGT Tx– 2
GND	A17	B17	GND
MGT Rx+ 3	A18	B18	MGT Tx+ 3
MGT Rx– 3	A19	B19	MGT Tx– 3
GND	A20	B20	GND
5.0 V	A21	B21	Reserved

The following table lists the available pins on the DIO connector.

Signal	Type	Direction
MGT Tx± <0..3>[2]	Xilinx UltraScale GTH	Output
MGT Rx± <0..3>[2]	Xilinx UltraScale GTH	Input
DIO <0..7>	Single-ended	Bidirectional
5.0 V	DC	Output
GND	Ground	—

Notice The maximum input signal levels are valid only when the module is powered on. To avoid permanent damage to the PXIe-5775, do not apply a signal to the device when the module is powered down.

Notice Connections that exceed any of the maximum ratings of any connector on the PXIe-5775 can damage the device and the system. NI is not liable for any damage resulting from such connections.

Configuring the PXIe-5775 in MAX

Use Measurement & Automation Explorer (MAX) to configure your NI hardware. MAX informs other programs about which NI hardware products are in the system and how they are configured. MAX is automatically installed with FlexRIO.

1. Launch MAX.
2. In the configuration tree, expand **Devices and Interfaces** to see the list of installed NI hardware.

   Installed modules appear under the name of their associated chassis.
3. Expand your **Chassis** tree item.

   MAX lists all modules installed in the chassis. Your default names may vary.

   Note If you do not see your module listed, press <F5> to refresh the list of installed modules. If the module is still not listed, power off the system, ensure the module is correctly installed, and restart.
4. Record the identifier MAX assigns to the hardware. Use this identifier when programming the PXIe-5775.
5. Self-test the hardware by selecting the item in the configuration tree and clicking **Self-Test** in the MAX toolbar.

   The MAX self-test performs a basic verification of hardware resources.

[2] MGTs are available only on devices with KU040 and KU060 FPGAs.

FlexRIO Examples

FlexRIO includes several example applications for LabVIEW. These examples serve as interactive tools, programming models, and as building blocks in your own applications.

Accessing FlexRIO Examples

FlexRIO examples are available in LabVIEW's NI Example Finder. Complete the following steps to access the examples by task.

1. In LabVIEW, click **Help»Find Examples**.
2. In the **NI Example Finder** window that appears, click **Hardware Input and Output» FlexRIO**.

   The examples are sorted by task. Click on an example and refer to the **Information** window for a description of the example. Refer the **Requirements** window for a list of hardware devices that can run the example.

   You can also click the Search tab to search all installed examples by keyword. For example, search for `FlexRIO` to locate all FlexRIO examples.

Examples also are available online that demonstrate FlexRIO basics, such as using DRAM, acquiring data from adapter modules, and performing high throughput streaming. Refer to *ni.com/examples* for these examples and for more information.

Block Diagram

The following figure shows a block diagram of the carrier portion of the PXIe-5775 (KU035 FPGA option).

Figure 5. Carrier Block Diagram (KU035)

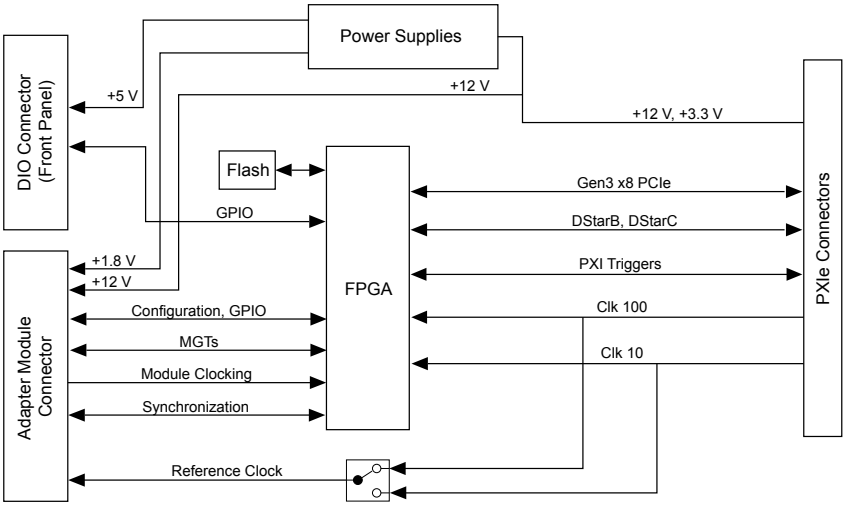

The following figure shows a block diagram of the carrier portion of the PXIe-5775 (KU040 and KU060 FPGA options).

Figure 6. Carrier Block Diagram (KU040 and KU060)

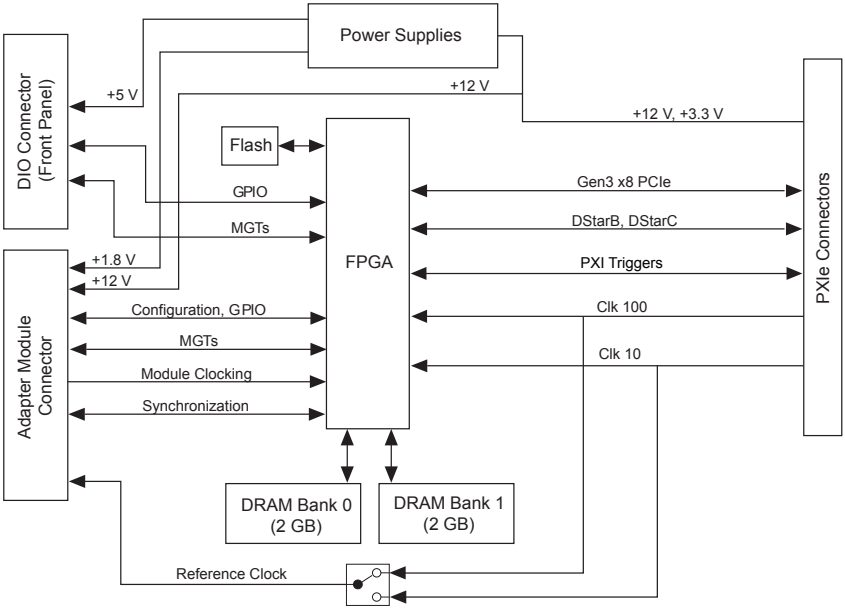

The following figure shows a block diagram of the I/O portion of the PXIe-5775.

Figure 7. PXIe-5775 Block Diagram

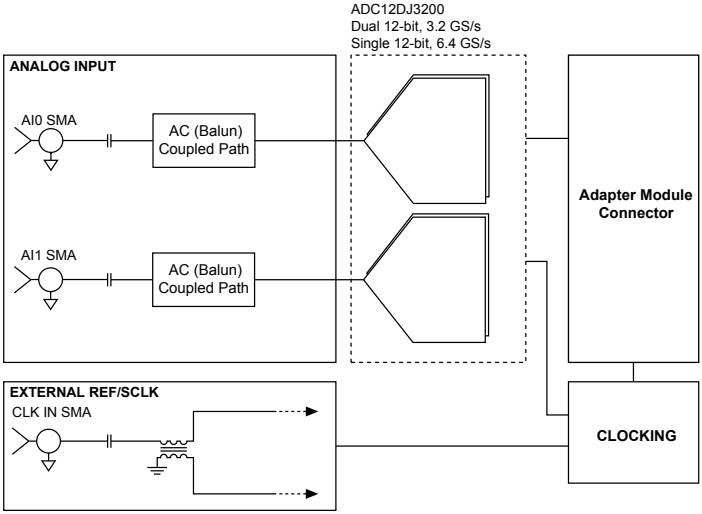

Component-Level Intellectual Property (CLIP)

The LabVIEW FPGA Module includes component-level intellectual property (CLIP) for HDL IP integration. FlexRIO devices support two types of CLIP: user-defined and socketed.

- *User-defined CLIP* allows you to insert HDL IP into an FPGA target, enabling VHDL code to communicate directly with an FPGA VI.
- *Socketed CLIP* provides the same IP integration of the user-defined CLIP, but it also allows the CLIP to communicate directly with circuitry external to the FPGA. Adapter module socketed CLIP allows your IP to communicate directly with both the FPGA VI and the external adapter module connector interface.

The PXIe-5775 ships with socketed CLIP items that add module I/O to the LabVIEW project.

Making a Measurement

Making a Measurement with LabVIEW

1. Launch LabVIEW.
2. Select **Help**»**Find Example**.
3. Open the example VI that you want to use by selecting **Hardware Input and Output**» **FlexRIO**.
4. Follow any setup, configuration, and execution instructions in the VI.

Troubleshooting

If an issue persists after you complete a troubleshooting procedure, contact NI technical support or visit *ni.com/support*.

What Should I Do if the PXIe-5775 Doesn't Appear in MAX?

1. In the MAX configuration tree, expand **Devices and Interfaces**.
2. Expand the **Chassis** tree to see the list of installed hardware, and press <F5> to refresh the list.
3. If the module is still not listed, power off the system, ensure that all hardware is correctly installed, and restart the system.
4. Navigate to the Device Manager.

Operating System	Description
Windows 10/8.1	Right-click the Start button, and select **Device Manager**.
Windows 7	Select **Start»Control Panel»Device Manager**.

5. Verify the PXIe-5775 appears in the Device Manager.
   a) Under an NI entry, confirm that a PXIe-5775 entry appears.

   Note If you are using a PC with a device for PXI remote control system, under **System Devices**, also confirm that no error conditions appear for the **PCI-to-PCI Bridge**.

   b) If error conditions appear, reinstall FlexRIO and the PXIe-5775.

What Should I Do if the PXIe-5775 Fails the Self-Test?

1. Restart the system.
2. Launch MAX, and perform the self-test again.
3. Power off the chassis.
4. Reinstall the failed module in a different slot.
5. Power on the chassis.
6. Perform the self-test again.

Where to Go Next

Refer to the following figure for information about other product tasks and associated resources for those tasks.

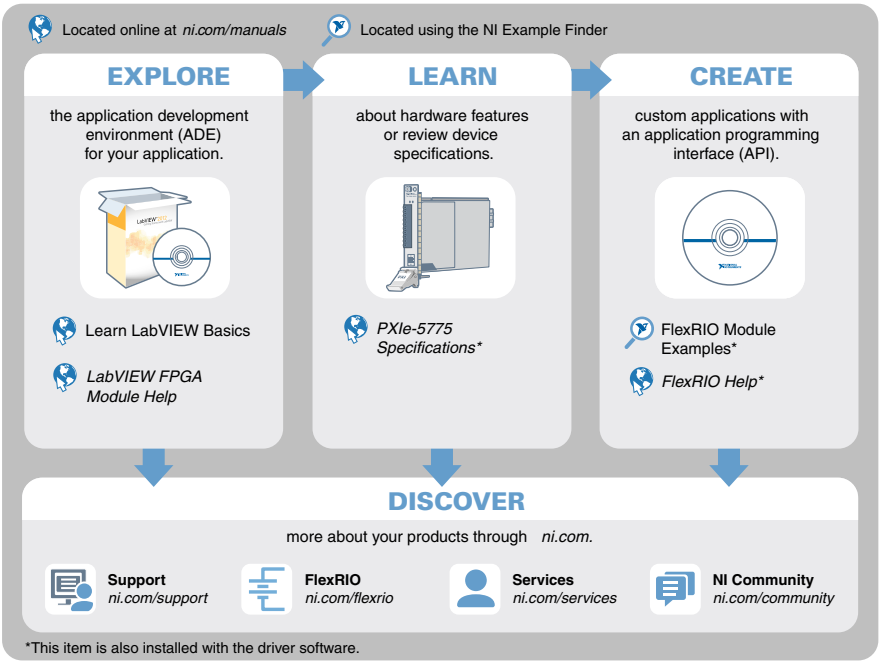

Worldwide Support and Services

The NI website is your complete resource for technical support. At *ni.com/support*, you have access to everything from troubleshooting and application development self-help resources to email and phone assistance from NI Application Engineers.

Visit *ni.com/services* for information about the services NI offers.

Visit *ni.com/register* to register your NI product. Product registration facilitates technical support and ensures that you receive important information updates from NI.

NI corporate headquarters is located at 11500 North Mopac Expressway, Austin, Texas, 78759-3504. NI also has offices located around the world. For support in the United States, create your service request at *ni.com/support* or dial 1 866 ASK MYNI (275 6964). For support outside the United States, visit the *Worldwide Offices* section of *ni.com/niglobal* to access the branch office websites, which provide up-to-date contact information.

Information is subject to change without notice. Refer to the *NI Trademarks and Logo Guidelines* at `ni.com/trademarks` for information on NI trademarks. Other product and company names mentioned herein are trademarks or trade names of their respective companies. For patents covering NI products/technology, refer to the appropriate location: **Help**»**Patents** in your software, the `patents.txt` file on your media, or the *National Instruments Patent Notice* at `ni.com/patents`. You can find information about end-user license agreements (EULAs) and third-party legal notices in the readme file for your NI product. Refer to the *Export Compliance Information* at `ni.com/legal/export-compliance` for the NI global trade compliance policy and how to obtain relevant HTS codes, ECCNs, and other import/export data. NI MAKES NO EXPRESS OR IMPLIED WARRANTIES AS TO THE ACCURACY OF THE INFORMATION CONTAINED HEREIN AND SHALL NOT BE LIABLE FOR ANY ERRORS. U.S. Government Customers: The data contained in this manual was developed at private expense and is subject to the applicable limited rights and restricted data rights as set forth in FAR 52.227-14, DFAR 252.227-7014, and DFAR 252.227-7015.

© 2018—2019 National Instruments. All rights reserved.

377770B-01 March 21, 2019