ServiceFirst™

Replacement Motors

Fractional HP Motors - Emerson
Fractional HP Motors - GE by REGAL-BELOIT
Integral HP Motors - USEM
Motor ID Guide

July 2006

RSP-PRC011-EN

© 2006 American Standard All rights reserved

Contents

Condenser Fan 4
Commercial Condenser Fan 8
Double Shaft Fan and Blower 10
Direct Drive Fan and Blower 11
Direct Drive Blower 14
Unit Heater Fan 15
Belted Fan and Blower 16
Oil Burner 19
Hot Water Circulating Pump 20
Evaporative Cooler 21
Fan and Blower 22
Unit Bearing Fan 23
21 Frame Replacement 24
OEM Replacement 25
Rescue Motors 40
Accessories 42
Air Moving Motors 44
General Purpose, Three Phase 48
Cooling Tower Duty Motor 52
Special Application Three Phase 53
Commercial Duty Pump 57
Special Application Close Coupled Pump 59
Heavy Duty Motor Starters 60
The Nameplate Tells the Story 61
NEMA Dimensions 63
Motor ID Guide 64
Introduction 65
Motor Types 66
Speed Shaded Pole 67
PSC Speed 68
Speed Split Phase 69
Speed Capacitor Start 71
General Information 73
NEMA Chart 76
Motor Characteristics 77
Cross Reference 78

Condenser Fan

Emerson
Permanent Split Capacitor

5.6" Diameter Totally Enclosed, Air Over

Features
- 60°C ambient design
- All angle thrust system
- Class B insulation
- Designed for 370V capacitors
- Extended studs
- 30" leads
- Hubless lead end
- Drain holes both ends
- Reversible
- Automatic thermal overload protector
- Continuous air over

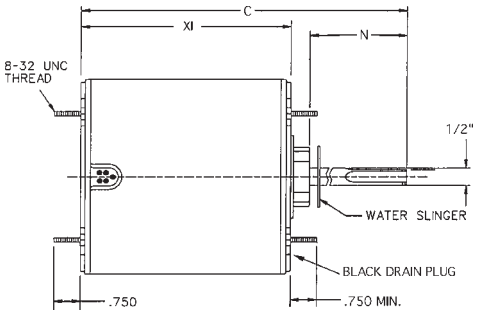

Stud Mount, Without Capacitor, High Ambient Design, All Angle Mount

HP	RPM/ Spds	Volts	Brgs	Cap MFD	Amps	Shaft N	Shell XI	Total C	Stack	Ship Wgt.	Notes	ServiceFirst Item #	Mfg. #
1/10	825	208-230	Slv	3.0	1.0	6.0	3.8	10.4	1.00	10		MOT06035	1871
1/8	825	208-230	Slv	5.0	0.8	6.0	4.1	10.6	1.25	11	2	MOT06036	1872
1/6	825	208-230	Slv	5.0	1.0	6.0	4.1	10.6	1.25	12	2	MOT06037	1873
1/6	825/2	208-230	Slv	5.0	1.0	6.0	4.4	10.9	1.50	14		MOT10142	8673
1/6	1075	208-230	Slv	5.0	1.0	5.0	3.8	9.4	1.00	11		MOT10143	1859
1/6	1075	460	Ball	5.0	0.5	6.0	4.3	10.9	1.00	10		MOT10144	3735
1/4	825	208-230	Slv	5.0	2.0	6.0	4.3	10.9	1.50	13	2	MOT06039	1874
1/4	825	460	Ball	5.0	1.0	6.0	5.1	11.6	1.75	14		MOT10145	1880
1/4	825/2	208-230	Slv	7.5	2.0	6.0	4.6	11.1	1.75	15		MOT10146	8674
1/4	1075	208-230	Slv	5.0	1.7	5.0	4.1	9.6	1.25	12		MOT06038	1860
1/4	1075	208-230	Ball	5.0	1.7	5.0	4.1	9.6	1.25	11		MOT10147	1876
1/4	1075	460	Ball	7.5	0.8	6.0	4.6	11.1	1.25	12		MOT10148	3736
1/4	1075/2	208-230	Slv	5.0	1.9	6.0	4.3	10.8	1.50	12	1	MOT06043	8669
1/4	1625	208-230	Slv	5.0	1.4	5.0	4.3	9.9	1.25	12		MOT10149	1890
1/3	825	208-230	Slv	5.0	1.8	6.0	5.1	11.6	2.25	17	2	MOT10067	1875
1/3	825	460	Ball	7.5	1.0	6.0	5.6	12.1	2.25	17		MOT10150	1881
1/3	825/2	208-230	Slv	7.5	2.0	6.0	5.4	11.9	2.50	17		MOT10151	8675
1/3	1075	208-230	Slv	7.5	2.1	5.0	4.6	10.1	1.75	14		MOT06040	1861
1/3	1075	460	Ball	7.5	1.3	6.0	5.4	11.9	2.00	17		MOT10153	3737
1/3	1075/2	208-230	Slv	7.5	2.2	6.0	4.8	11.4	2.00	16	1	MOT06045	8670
1/3	1625	208-230	Slv	5.0	1.9	5.0	4.6	10.1	1.50	13		MOT10154	1891
1/2	825	460	Ball	10.0	1.6	6.0	6.3	12.9	2.25	21		MOT10155	1882
1/2	1075	208-230	Slv	7.5	2.9	5.0	5.1	10.6	2.25	17		MOT06041	1862
1/2	1075	460	Ball	10.0	1.5	6.0	5.9	12.4	2.50	19		MOT10157	3738
1/2	1075/2	208-230	Slv	10.0	2.9	6.0	4.3	10.8	3.00	21	1	MOT06047	8671
1/2	1625	208-230	Slv	5.0	3.0	5.0	5.1	10.6	2.00	15		MOT10158	1892
3/4	1075	208-230	Slv	10.0	4.5	5.0	4.7	10.3	3.00	20		MOT06042	1868
3/4	1075	208-230	Ball	10.0	4.7	5.0	5.8	11.4	3.00	21		MOT10159	1879
3/4	1075	460	Ball	10.0	2.0	6.0	6.4	12.9	3.00	22		MOT10160	3742

1. 1.5" Stud Ext., shaft end only, 40°C ambient, double flats and Economizer® rated.
2. Includes 4 holes in shell for Rheem mount.

Condenser Fan

Emerson
Permanent Split Capacitor

5.6" Diameter Open Dripproof

Features
- High efficiency Economizer® rated (except as noted)
- 60 Hz
- Capacitor mounting holes in frame band
- Continuous duty, air over
- Water slinger
- Designed for 370V capacitors
- Automatic thermal overload protector
- Sleeve bearings have all angle thrust system
- Green ground lead
- Reversible
- Class B insulation
- Extended studs are 8-32 unless otherwise noted
- 30" leads
- Double flats on shaft
- Enclosed end shield at shaft end

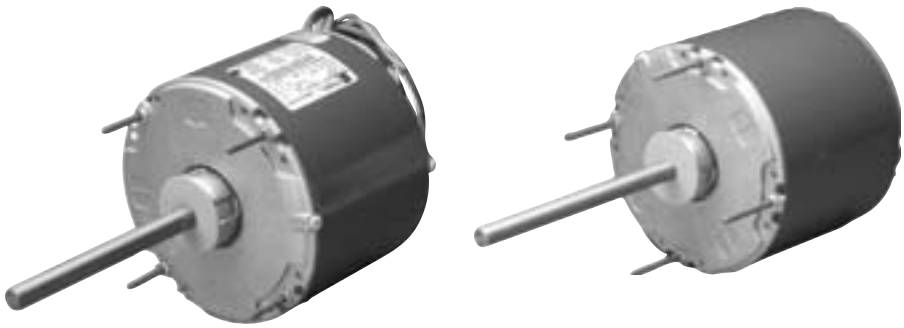

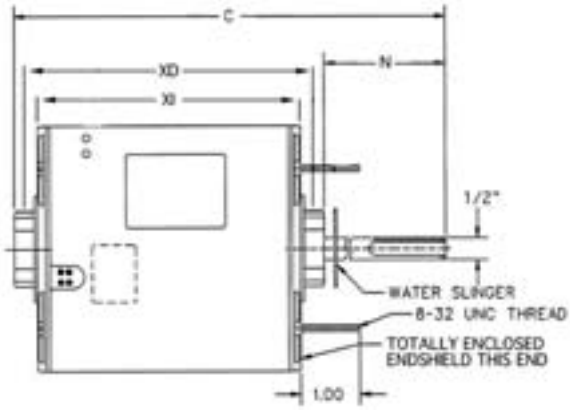

Stud Mount, Shaft Up or Horizontal, Without Capacitor

HP	RPM/ Spds	Volts	Brgs	Cap MFD	Amps	Shaft N	Base XD	Shell XI	Total C	Ship Wgt.	Notes	ServiceFirst Item #	Mfg. #
1/6	1075	208-230	Slv	3.0	1.3	6.0	4.4	3.8	10.9	10	1	MOT06000	8661
1/4	825	230	Slv	5.0	1.9	6.0	5.1	4.6	11.6	14		MOT06003	8666
1/4	1075	208-230	Slv	5.0	1.7	5.0	4.4	3.8	9.9	14	1	MOT06002	3851
1/4	1075/2	230	Slv	5.0	1.9	6.0	4.9	4.3	11.3	16		MOT06013	8302
1/3	825	230	Slv	7.5	2.0	6.0	5.6	5.1	12.1	16	2	MOT06006	8667
1/3	1075	208-230	Slv	5.0	2.2	5.0	4.9	4.3	9.4	12	1	MOT06007	6880
1/3	1075/2	230	Slv	7.5	2.2	6.0	5.4	4.8	11.8	15		MOT06014	8301
1/2	1075	208-230	Slv	7.5	3.1	5.0	5.4	4.8	10.9	15	1	MOT06009	3852
1/2	1075	230	Ball	7.5	3.1	6.0	5.6	5.1	12.2	18		MOT06010	1444
1/2	1075/2	230	Slv	10.0	3.3	6.0	5.9	5.3	12.3	16		MOT06015	8348
1/2	1075/2	230	Ball	10.0	3.3	6.0	6.8	5.3	12.4	19		MOT06016	9393
3/4	1075	208-230	Slv	10.0	4.8	5.0	6.6	6.1	12.1	20		MOT06012	3097
3/4	1075	230	Ball	12.5	4.4	6.0	5.9	5.3	12.4	23		MOT06011	8665

1. Not Economizer.®
2. Stud extensions out both sides of motor.

Condenser Fan

Emerson
Permanent Split Capacitor

5.6" Diameter Open Dripproof

Features
- High efficiency Economizer® rated (except as noted)
- 60 Hz
- Capacitor mounting holes in frame band
- Continuous duty, air over
- Designed for 370V capacitors
- Automatic overload protector
- Sleeve bearings have all angle thrust system
- Class B insulation
- Green ground lead
- Extended studs are 8-32 unless otherwise noted
- 20" or 30" leads unless otherwise noted
- Double flats on shaft — Economizer® models
- Reversible
- Enclosed end shield at shaft end
- Water Slinger

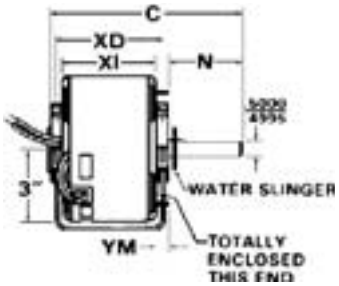

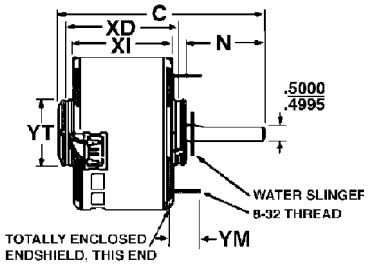

Resilient Base, Shaft Up or Horizontal, With Capacitor (Figure A)

HP	RPM/ Spds	Volts	Brgs	Cap MFD	Amps	Shaft N	Base XD	Shell XI	Total C	Stud YM	Ship Wgt.	Notes	ServiceFirst Item #	Mfg. #
Single Speed														
1/4	1075	230	Slv	5.0	1.9	4.9	5.1	4.6	10.4	1.0	15	1	MOT06017	3846
1/3	1625	230	Slv	5.0	1.8	4.9	5.1	4.6	10.7	1.0	16		MOT06018	4811
1/3	1625	230	Ball	5.0	1.8	4.9	5.1	4.6	10.7	1.0	17	1	MOT06019	4961
1/3	1075	230	Slv	7.5	2.2	4.9	5.5	4.9	10.9	1.0	16		MOT06020	3847
1/3	1075	230	Ball	7.5	2.2	4.9	5.4	4.8	10.9	1.0	16		MOT06021	4960
1/3	825	230	Slv	10.0	2.3	5.0	7.1	6.5	12.4	1.0	24	1	MOT06022	3849
1/2	1075	230	Slv	7.5	3.1	5.0	6.5	5.9	12.0	1.0	19		MOT06023	3848
1/2	1075	230	Ball	7.5	3.1	4.9	6.4	6.0	11.9	1.0	18		MOT06024	7025

Hub Ring Mount (2 1/4"), Shaft Up or Horizontal, Without Capacitor (Figure B)

HP	RPM/ Spds	Volts	Brgs	Cap MFD	Amps	Shaft N	Base XD	Shell XI	Total C	Stud YM	Ship Wgt.	Notes	ServiceFirst Item #	Mfg. #
Single Speed														
1/3	825	115	Ball	6.0	6.0	6.0	6.9	6.4	12.9	1.0	12	2	MOT06025	8042
1/3	825	230	Ball	5.0	3.0	6.0	6.9	6.4	12.9	1.0	19	2	MOT06026	5345
1/3	825	208-230	Ball	7.5	2.6	6.0	6.4	6.0	12.4	1.0	18		MOT06027	7040
1/2	825	230	Ball	12.5	2.8	6.0	6.7	5.8	13.2	1.0	21		MOT06028	7041

1. Not Economizer.®
2. Stud extensions out both sides of motor.

Condenser Fan

Emerson
Shaded Pole

5.0" Diameter Open Dripproof

Features
- 36" leads
- Mechanically reversible
- Sleeve bearings have all angle thrust
- BX connector
- CW lead end
- Class B insulation
- Continuous duty, air over
- Automatic thermal overload protector
- Connection instructions included in nameplate data
- Green ground lead

Resilient Base

HP	RPM/ Spds	Volts	Brgs	NEMA Frame	Amps	Shaft N	Base XD	Shell XI	Total C	D	Ship Wgt.	Notes	ServiceFirst Item #	Mfg. #
Single Speed														
1/10	1550	115	Slv	42Z	5.2	2.4	3.9	3.8	7.4	2.6	10		MOT06029	723
1/10	1550	230	Slv	42Z	2.6	2.4	3.9	3.3	6.9	2.6	9		MOT06030	721
1/6	1550	115	Slv	42	5.4	2.4	4.4	3.8	7.3	2.6	11		MOT06031	724
1/6	1550	230	Slv	42Z	2.7	2.4	4.4	3.8	7.4	2.6	11		MOT06032	722

Tech Tip

Old technology shaded pole motors can be replaced with higher efficiency PSC motors.

Commercial Condenser Fan

Emerson
Permanent Split Capacitor
Totally Enclosed

Features
- Capacitor and outlet box included, unless noted
- Reversible shaft rotation
- Double-sealed ball bearing
- Continuous duty, air over
- 40°C ambient
- Dual voltage
- Class B insulation
- Automatic thermal overload protector

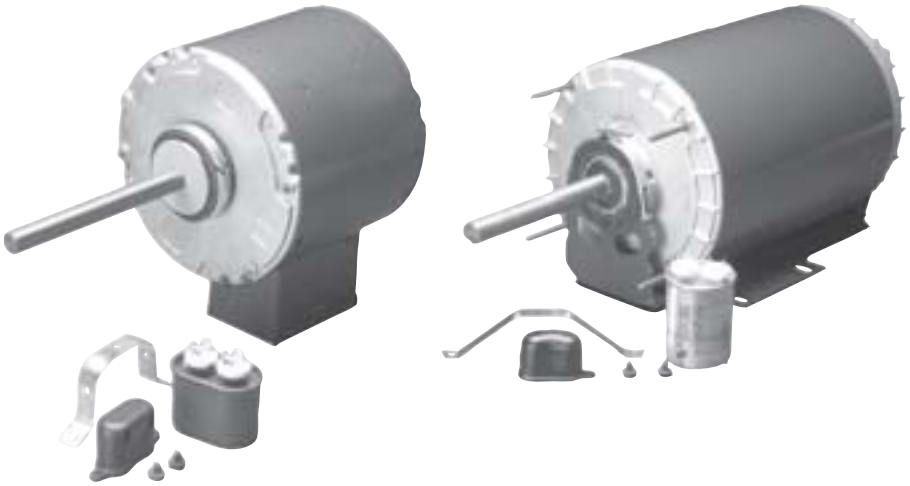

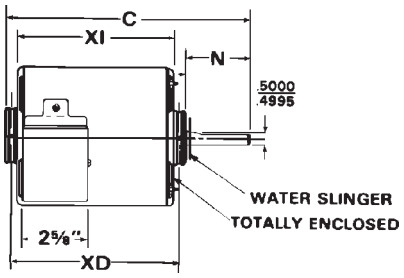

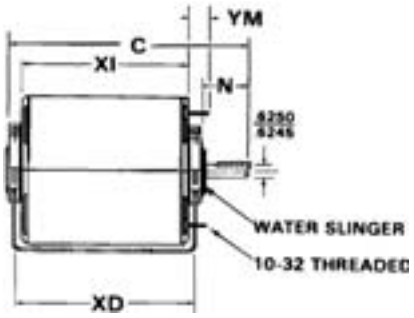

5.6" Diameter (Figure A) All Angle Mounting

HP	RPM/ Spds	Volts	Brgs	Cap MFD	Amps	Shaft N	XD	Shell XI	Total C	Stud YM	Ship Wgt.	Notes	ServiceFirst Item #	Mfg. #
Hub Ring Mount (2 1/4")														
1/4	1075	208-230/460	Ball	5.0	2.0/1.0	5.0	5.6	5.1	11.3	N/A	15		MOT06060	6838
1/3	1075	208-230/460	Ball	5.0	2.4/1.2	5.0	5.9	5.3	11.4	N/A	17		MOT06061	6727
1/2	1075	208-230/460	Ball	10.0	2.8/1.4	5.0	6.4	5.8	11.9	N/A	20		MOT06062	7475
1/2	1075	208-230/460	Ball	10.0	3.2/1.6	5.0	7.4	6.8	12.8	N/A		3	MOT10161	2201
3/4	1075	208-230/460	Ball	12.5	4.6/2.3	5.0	8.4	7.8	13.8	N/A		3	MOT10162	2202
3/4	1075	208-230/460	Ball	7.5	5.0/2.5	5.0	6.9	6.3	12.4	N/A	22	1	MOT06064	6603
3/4	1075	208-230/460	Ball	7.5	5.0/2.5	5.0	6.9	6.3	12.3	N/A	22	1, 2	MOT06063	5489

6.3" Diameter All Angle Mounting

HP	RPM/ Spds	Volts	Brgs	Cap MFD	Amps	Shaft N	XD	Shell XI	Total C	Stud YM	Ship Wgt.	Notes	ServiceFirst Item #	Mfg. #
Stud Mount (4) Shaft Side (Fig. A with 5/8" shaft)														
1/2	825	208-230	Ball	10.0	3.6	6.0	7.0	6.0	13.4	1.5	25	2	**MOT06067**	3568
3/4	1075	208-230	Ball	15.0	3.8	6.0	7.0	6.0	13.4	1.5	26	2	**MOT06068**	3566
3/4	825	208-230	Ball	17.5	5.3	6.0	8.2	7.8	14.6	1.5	32	2	**MOT06069**	3567
1	1075	208-230	Ball	17.5	5.2	6.0	7.5	6.5	13.9	1.5	30	2	**MOT06070**	3565
1	1075	208-230/460	Ball	17.5	5.2/2.6	6.0	10.4	9.8	16.9	1.5	40	3	**MOT10163**	2203
1 1/2	1075	208-230/460	Ball	20.0	7.6/3.8	6.0	10.9	10.3	16.9	1.5	43	3	**MOT10164**	2204
Resilient Base (Figure B)														
1	1075	208-230/460	Ball	17.5	5.1/2.6	5.0	10.5	9.3	15.8	1.5	38	4	**MOT06065**	2686
1 1/2	1075	208-230/460	Ball	20.0	7.5/3.8	5.0	11.0	9.8	16.3	1.5	47	3, 4	**MOT06066**	2896

1. Ventilated (in wet applications, position vent holes at bottom of motor).
2. No Outlet Box. Includes Leads.
3. Capacitor not included, internal conduit box.
4. Quick change voltage receptacle, no outlet box.

Commercial Condenser Fan

Emerson
Three Phase

Open Dripproof

Features
- Automatic thermal overload protector
- Reversible shaft rotation
- Continuous duty, air over
- Double-sealed ball bearings
- Dual voltage
- Class B insulation

Application
For use in 5 to 15 ton and larger commercial air conditioning, where three phase is required.

Rigid Base for Belt Drive, Air Over not needed, 40°C Ambient Rated

HP	RPM/ Spds	Volts	Brgs	NEMA Frame	Amps	Shaft Length	Shaft Dia.	SF	Total Length	Ship Wgt.	Notes	ServiceFirst Item #	Mfg. #
Belt Drive, Quick Voltage Change Device													
1	1725	208-230/460	Ball	56	3.4/1.7	1.9	.625	1.15	11.9	24		MOT06071	1813
1 1/2	1725	208-230/460	Ball	56	5.0/2.5	1.9	.625	1.15	12.4	27		MOT06072	1814

Shaft Up Condenser Fans, 60°C Ambient Rated

HP	RPM/ Spds	Volts	Brgs	NEMA Frame	Amps	Shaft Length	Shaft Dia.	SF	Total Length	Ship Wgt.	Notes	ServiceFirst Item #	Mfg. #
Belly Band Mount, Flat and Keyway on Shaft													
1	1140	208-230/460	Ball	56YZ	4.8/2.4	6.0	.625	1.00	16.8	29		MOT06076	1818
1 1/2	1140	208-230/460	Ball	56YZ	7.1/3.6	6.0	.625	1.00	16.8	36		MOT06077	1819
1	850	208-230/460	Ball	56YZ	5.0/2.5	6.0	.625	1.00	17.2	33		MOT10165	1828
Rigid Base Mount, Flat and Keyway on Shaft													
1	1140	208-230/460	Ball	56HZ	4.8/2.4	6.0	.625	1.00	16.8	32		MOT10167	1820
1 1/2	1140	208-230/460	Ball	56HZ	7.2/3.6	6.0	.625	1.00	16.8	39		MOT10168	1821
2	1140	208-230/460	Ball	56HZ	7.8/3.9	6.0	.625	1.00	17.3	45		MOT10169	1822

Double Shaft Fan and Blower

Emerson

Permanent Split Capacitor

5.6" Diameter Open Dripproof

Features

- Automatic thermal overload protector
- CCW rotation lead end
- Sleeve bearings have all angle thrust system
- Continuous duty, air over
- Green ground lead
- Connection and capacitor information furnished on nameplate
- Three speed
- Designed for 370V capacitors
- Mounting holes in shell for mounting capacitor
- When supplied, capacitor and mounting hardware are supplied detached
- Hub rings are 2 1/4" diameter, furnished detached, with extra metal outer rings for adapting to 2 1/2" diameter
- 20" leads
- Class B insulation

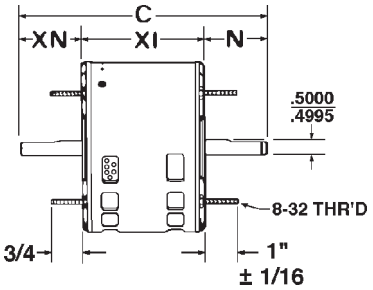

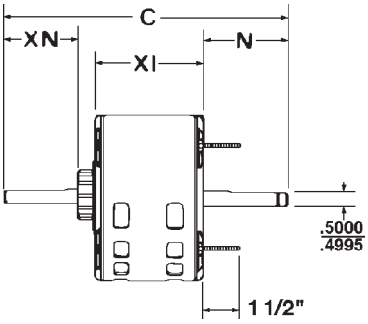

Hub or Stud Mount, With Capacitor and Mounting Kit (Figure B)

HP	RPM/ Spds	Volts	Brgs	Cap MFD	Amps	Shaft N	Shaft XN	Shell XI	Total C	Ship Wgt.	Notes	ServiceFirst Item #	Mfg. #
3 Speed (Fig B)													
1/6	1075/3	115	Slv	5.0	3.0	8.0	8.0	3.6	20.1	12		MOT06080	1216
1/6	1075/3	230	Slv	4.0	1.5	8.0	8.0	4.1	20.1	12		MOT06081	1215
1/4	1550/3	230	Slv		3.4	8.0	8.0	4.3	20.9	14	1	MOT06097	1221
1/3	1625/3	230	Slv	5.0	2.2	8.0	8.0	4.3	20.8	13		MOT06083	1887
1/3	1075/3	230	Slv	5.0	2.5	8.0	8.0	4.3	20.1	18		MOT06085	1213
1/2	1075/3	230	Slv	5.0	4.5	5.7	5.7	6.3	18.9	18	2	MOT06087	5824
1/2	1075/3	230	Slv	5.0	4.5	8.0	8.0	5.4	22.0	19		MOT06086	1824

Hub or Stud Mount, Without Capacitor and Mounting Kit (Figure B)

HP	RPM/ Spds	Volts	Brgs	Cap MFD	Amps	Shaft N	Shaft XN	Shell XI	Total C	Ship Wgt.	Notes	ServiceFirst Item #	Mfg. #
3 Speed (Fig. B)													
1/6	1075/3	230	Slv	4.0	1.5	8.0	8.0	3.3	20.4	12		MOT06088	3133
1/4	1075/3	230	Slv	5.0	1.9	8.0	8.0	4.6	20.1	13		MOT06089	3134
1/3	1075/3	230	Slv	5.0	2.5	8.0	8.0	4.6	21.1	14		MOT06090	3135
1/2	1075/3	230	Slv	5.0	4.5	8.0	8.0	5.4	22.0	20		MOT06091	3136

Stud Mount, Without Capacitor and Mounting Kit (Figure A)

HP	RPM/ Spds	Volts	Brgs	Cap MFD	Amps	Shaft N	Shaft XN	Shell XI	Total C	Ship Wgt.	Notes	ServiceFirst Item #	Mfg. #
3 Speed (Fig. A) Economizer® High Efficiency													
1/4	1625/3	230	Slv	6.0	1.6	7.0	7.0	4.1	18.1	12		MOT06092	8725
1/3	1625/3	230	Slv	7.5	1.9	7.0	7.0	4.3	18.3	13		MOT06094	8726

1. Shaded Pole 5.0" Diameter motor.
2. With two 5/8" shaft adapters and hubs on both ends. Length adapter not supplied.

Direct Drive Fan and Blower

Emerson

Permanent Split Capacitor and Shaded Pole

5.0" Diameter Open

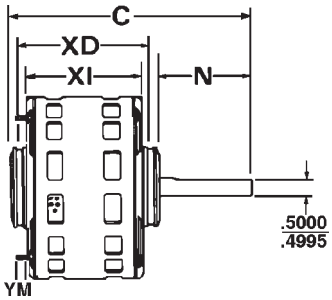

Features

- Reversible
- Class A insulation
- Sleeve bearing motors have all angle thrust system
- High efficiency Economizer®
- Designed for 370V capacitors
- Continuous duty, air over
- 24" line leads unless otherwise noted
- Automatic thermal overload protector
- Connection and capacitor information furnished in the nameplate data

Permanent Split Capacitor, 5.0" Diameter, Stud or Hub Ring Mount (2.5")

HP	RPM/ Spds	Volts	Brgs	Cap MFD	Amps	Shaft N	Base XD	Shell XI	Total C	Stud YM	Ship Wgt.	Notes	ServiceFirst Item #	Mfg. #
3 Speed														
1/4	1050/3	115	Slv	7.5	2.8	4.0	4.9	4.3	8.9	1.0	13	1	MOT10170	1390
1/4	1050/3	208-230	Slv	7.5	1.5	4.0	4.9	4.3	8.9	1.0	13	1	MOT10032	1391
4 Speed														
1/5	1075/4	115	Slv	4.0	3.5	3.5	4.6	4.1	8.7	N/A	10	2	MOT06107	1268

1. Hubrings not included.
2. Class B insulation.

Shaded Pole, 5.0" Diameter, Hub Ring Mount (2.5")

HP	RPM/ Spds	Volts	Brgs	NEMA Frame	Amps	Shaft N	Base XD	Shell XI	Total C	Stud YM	Ship Wgt.	Notes	ServiceFirst Item #	Mfg. #
Single Speed														
1/6	1050	115	Slv	42	6.0	4.0	5.0	4.3	9.4	N/A	12	1, 2, 3	MOT06138	1127
1/6	1050	230	Slv	42	2.9	6.0	4.9	4.3	11.3	N/A	12	1, 2, 3	MOT06139	1631
Three Speed														
1/10	1050	115	Slv	42	3.5	4.0	4.1	3.6	8.6	N/A	7	1, 2, 3	MOT06140	985

1. 21" line leads.
2. Rotation CCW L.E.
3. Non-reversible.

Direct Drive Fan and Blower

Emerson
Permanent Split Capacitor

5.6" Diameter Open

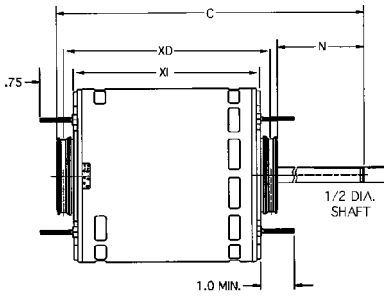

Features
- Stud extensions on popular models
- Designed for 370V capacitors
- Class A insulation
- 24" leads
- High efficiency Economizer®
- Continuous duty, air over
- Sleeve bearing motors with all angle thrust system
- Automatic thermal overload protector
- Connection and capacitor information furnished in the nameplate data
- 2.5" diameter hub rings included
- Reversible

Hub Ring Mount (2.5"), except as noted

HP	RPM/ Spds	Volts	Stack	Cap MFD	Amps	Shaft N	XD	Shell XI	Total C	Ship Wgt.	Notes	ServiceFirst Item #	Mfg. #
Without capacitor													
1/4	1075/3	115	1.25	5.0	3.9	5.0	4.9	4.3	10.4	12	1	MOT06109	1863
1/4	1625/3	115	1.25	10.0	2.7	5.0	4.9	4.3	10.4	13	1	MOT10171	1690
1/4	1075/3	208-230	1.25	5.0	1.8	5.0	4.9	4.3	10.4	11	1	MOT06110	1971
1/4	1075/3	277	1.50	4.0	1.6	5.0	5.1	4.6	10.7	14	3	MOT06112	600
1/4	1625/3	208-230	1.25	5.0	1.4	5.0	5.0	4.3	10.4	12	1	MOT10172	1691
1/3	1075/3	115	1.50	7.5	5.0	5.0	4.9	4.3	10.4	12	1	MOT06114	1864
1/3	1625/3	115	1.50	15.0	3.7	5.0	5.1	4.6	10.7	13	1	MOT10173	1692
1/3	1075/3	208-230	1.50	5.0	2.4	5.0	4.9	4.3	10.4	13	1	MOT06115	1972
1/3	1075/3	277	1.75	4.0	2.2	5.0	5.2	4.7	10.7	14	3	MOT06117	601
1/3	1625/3	208-230	1.50	5.0	2.1	5.0	5.1	4.6	10.7	13	1	MOT10174	1693
1/2	1075/3	115	2.50	10.0	7.4	4.0	6.0	5.4	10.4	19	1	MOT06119	1865
1/2	1625/3	115	2.25	15.0	5.5	5.0	5.9	5.3	11.4	17	1	MOT10175	1694
1/2	1075/3	208-230	2.50	7.5	3.3	5.0	5.9	5.3	11.4	19	1	MOT06120	1973
1/2	1075/3	277	2.00	6.0	3.4	5.0	5.5	4.9	10.9	16	3	MOT06122	602
1/2	1625/3	208-230	2.25	7.5	3.0	5.0	5.9	5.3	11.4	17	1	MOT10176	1695
3/4	1625/3	115	2.50	15.0	8.6	5.0	6.1	5.6	11.7	20	1	MOT10177	1696
3/4	1625/3	208-230	2.50	10.0	4.0	5.0	6.1	5.6	11.7	18	1	MOT10178	1697
3/4	1075/3	115	2.50	15.0	9.1	4.0	6.0	5.4	10.4	19	1,3	MOT09415	8904
3/4	1075/3	208-230	2.50	10.0	4.6	4.0	6.0	5.4	10.4	19	1,3	MOT09416	8905
1	1075/3	115	3.00	20.0	12.1	5.0	6.6	6.1	12.2	20	2	MOT10179	8906
1	1075/3	208-230	3.00	20.0	5.2	5.0	6.6	6.1	12.2	21	2	MOT10180	8907

1. Not Economizer.®
2. Not Economizer®, Class B Insulation, Studs shaft side only, Ball bearings.
3. No stud extension.

Direct Drive Fan and Blower

Emerson
Permanent Split Capacitor

5.6" Diameter Open

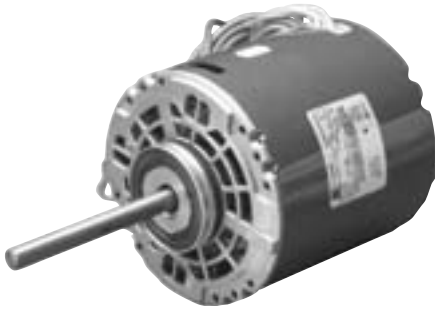

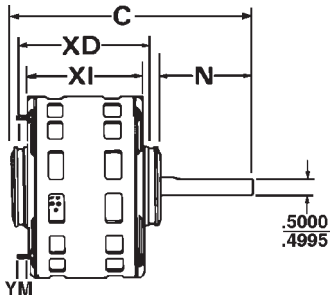

Features
- Reversible
- Class A insulation
- Sleeve bearing motors have all angle thrust system
- Continuous duty, air over
- Designed for 370V capacitors
- 24" line leads unless otherwise noted
- Automatic thermal overload protector
- Connection and capacitor information furnished in the nameplate data
- When furnished, the capacitor and its mounting hardware is supplied detached
- 2.5" diameter hub rings included

Permanent Split Capacitor, 5.6" Dia., Stud or Hub Ring Mount (2.5"), with Capacitor

HP	RPM/ Spd	Volts	Brgs	Cap MFD	Amps	Shaft N	XD	Shell XI	Total C	Stud YM	Ship Wgt.	Notes	ServiceFirst Item #	Mfg. #
Single Speed														
1/3	825	208-230	Ball	5.0	3.0	4.5	6.4	5.8	11.4	N/A	17	1	MOT06125	6873
2 Speed														
1/2	825/2	208-230	Slv	10.0	3.9	4.0	6.2	5.6	10.7	1.0	23	2	MOT06126	3183
4 Speed														
1/6	1075/4	115	Slv	4.0	2.2	6.0	4.6	4.1	11.1		11	3	MOT12128	5825
1/6	1075/4	208-230	Slv	5.0	1.1	6.0	4.6	4.1	11.1		11	3	MOT12129	5826
1/4	1075/4	115	Slv	5.0	3.8	6.0	4.9	4.4	11.4		12	3	MOT12131	5830
1/4	1075/4	208-230	Slv	5.0	1.8	6.0	4.9	4.4	11.4		12	3	MOT12130	5831
1/3	1075/4	115	Slv	7.5	4.6	6.0	5.4	4.9	11.9		13	3	MOT12132	5835
1/3	1075/4	208-230	Slv	6.0	2.3	6.0	5.2	4.7	11.7		13	3	MOT12135	5836
1/2	1075/4	115	Slv	7.0	7.1	6.0	5.8	5.3	12.4		19	3	MOT12133	5840
1/2	1075/4	208-230	Slv	7.5	3.3	6.0	5.6	5.1	12.2		19	3	MOT12136	5841
3/4	1075/4	115	Slv	7.5	10.6	6.0	6.2	5.7	12.7		20	3	MOT12134	5845
3/4	1075/4	208-230	Slv	15.0	5.1	6.0	6.2	5.7	12.7		20	3	MOT12137	5846

1. 50" line leads, capacitor not furnished.
2. 5/8" shaft adapter.
3. 2.25" dia. Hub Rings with kit for 2.5" included

Direct Drive Blower

Emerson Split Phase

6.3" Diameter

Features
- Continuous duty
- NEMA dimensions
- Reversible rotation by easy reconnection
- Class A insulation
- Suitable for all position mounting
- Threaded conduit hole
- 5/8" shaft adapter furnished with all 1/2" shaft diameter motors
- With terminal cover gasket
- 1.0 service factor
- Automatic thermal overload protector

Resilient Base, Totally Enclosed, Air Over

HP	RPM	Volts	Brgs	NEMA Frame	Amps	Shaft Length	Base Length	Shell Length	Total Length	Stud Length	Ship Wgt.	Notes	ServiceFirst Item #	Mfg. #
Single Speed														
1/4	1725	115	Ball	56Z	5.0	1.9	7.6	6.8	9.8	1.1	18		MOT10184	6326
1/3	1725	115	Ball	56Z	5.4	1.9	7.6	6.8	9.8	N/A	21		MOT10185	6328
1/2	1725	115	Ball	56	7.4	1.9	8.1	7.2	10.3	1.1	21		MOT10186	6330

C-Face NEMA Mount, Open Dripproof

HP	RPM	Volts	NEMA Frame	S.F.	Brgs	Amps	Protector	Shaft Dia.	Shaft Length	C Dim1	Ship Wgt.	Notes	ServiceFirst Item #	Mfg. #
1/12	850	115	56CZ	1.40	Ball	3.2	None	0.625	2.3	11.0	24	1	**MOT10187**	1204
1/8	850	115	56CZ	1.40	Ball	4.6	None	0.625	2.3	11.0	24	1	MOT10188	1205
1/6	850	115	56CZ	1.35	Ball	4.7	None	0.625	2.3	11.2	25	1	MOT10189	1206
1/4	850	115	56CZ	1.35	Ball	6.9	Auto	0.625	2.3	12.0	30	1	MOT10190	1207
1/3	850	115	56CZ	1.35	Ball	9.0	Auto	0.625	2.3	12.7	40	1	MOT10191	1208

1. Internal conduit box and conduit outlet on end opposite shaft.

Unit Heater Fan

Emerson
Permanent Split Capacitor

5.6" and 6.3" Diameter Totally Enclosed

Features

- Continuous duty, air over
- Reversible motors are easily reversed with quick connects or reversing plug
- 2 1/2" diameter hub rings when furnished
- Automatic thermal overload protector
- Green ground lead
- 48 frame has 8-32 mounting studs, 56 frames has 10-32
- 370V capacitor is furnished
- Leads are SJO cord
- Extended mounting studs

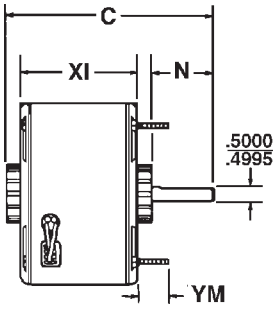

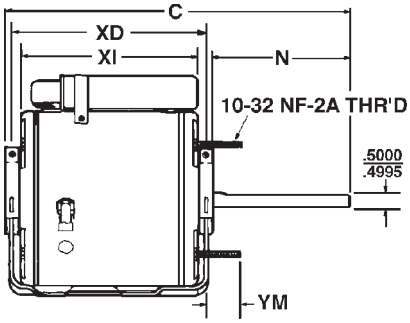

Stud Mount, 5.6" Diameter (Figure A)

HP	RPM/ Spd	Volts	Brgs	Cap MFD	Amps	Shaft N	XD	Shell XI	Total C	Stud YM	Ship Wgt.	Notes	ServiceFirst Item #	Mfg. #
Single Speed														
1/6	1075	115	Ball	4.0	2.6	2.5	4.9	4.3	7.9	0.8	12		MOT06195	9034
1/4	1075	115	Ball	5.0	3.6	2.5	5.8	5.1	8.7	0.8	15		MOT06196	9035
1/3	1075	115	Ball	4.0	5.1	2.5	5.8	5.1	8.7	0.8	15		MOT06197	9036
2 Speed														
1/6	1075/2	115	Ball	4.0	2.4	5.0	4.6	4.3	10.4	2.5	12	1	MOT06198	4856
1/3	1075/2	230	Ball	4.0	2.4	5.0	5.5	4.8	10.9	2.5	14	1	MOT06200	4855

Resilient Base, 6.3" Diameter (Figure B)

HP	RPM/ Spd	Volts	Brgs	Cap MFD	Amps	Shaft N	XD	Shell XI	Total C	Stud YM	Ship Wgt.	Notes	ServiceFirst Item #	Mfg. #
2 Speed														
1/2	1075/2	230	Ball	10.0	2.5	4.9	7.5	6.3	12.8	2.5	26		MOT06201	1810
3/4	1075/2	230	Ball	12.5	3.7	4.9	8.5	7.3	13.8	2.5	34		MOT06202	1811

1. Capacitor shipped detached.

Belted Fan and Blower

Emerson
Split Phase

Open Dripproof

Features
- Class A insulation (except otherwise noted)
- With threaded conduit hole
- NEMA dimensions
- Reversible rotation by easy reconnection
- Automatic thermal overload protector

Resilient Base

HP	RPM	Volts	Brgs	NEMA Frame	Amps	Shaft Length	Shaft Dia.	Protector	Total Length	S.F.	Ship Wgt.	Notes	ServiceFirst Item #	Mfg. #
Single Speed (NEMA 48 Frame)														
1/6	1725	115	Slv	48	3.5	1.5	.500	Auto	8.4	1.35	16		MOT06141	839
1/4	1725	115	Slv	48	5.3	1.5	.500	Auto	8.9	1.35	13	1,3	MOT06144	8000
1/4	1725	115	Slv	48	4.8	1.6	.500	Auto	9.4	1.35	16	4,6	MOT10247	840CV
1/4	1725	115	Slv	48	4.4	1.5	.500	Auto	8.9	1.00	14		MOT06142	936
1/4	1725	115	Ball	48	4.4	1.5	.500	Auto	9.9	1.35	21		MOT06145	2889
1/3	1725	115	Slv	48	6.7	1.5	.500	Auto	9.4	1.35	15	1,3	MOT06149	8100
1/3	1725	115	Slv	48	5.6	1.6	.500	Auto	9.9	1.35	18	4,6	MOT10248	841CV
1/3	1725	115	Ball	48	5.4	1.5	.500	Auto	9.9	1.35	18		MOT06150	2888
1/3	1725	230	Slv	48	2.7	1.5	.500	Auto	9.9	1.35	19		MOT06151	8412
1/2	1725	115	Slv	48	8.7	1.5	.500	Auto	10.0	1.25	18	1,3	MOT06153	8200
1/2	1725	115	Ball	48	7.8	1.5	.500	Auto	9.9	1.25	21		MOT06154	2887
1/2	1725	115/230	Slv	48	7.8/3.9	1.5	.500	Auto	10.4	1.25	20		MOT06155	2695
2 Speed (NEMA 48 Frame)														
1/3	1725/1140	115	Slv	48	5.8	1.5	.500	Auto	10.4	1.35	22		MOT06157	1786
1/3	1725/1140	230	Slv	48	2.9	1.6	.500	Auto	10.4	1.35	22		MOT06158	1789
Single Speed (NEMA 56 Frame)														
1/3	1725	115	Slv	56Z	5.8	1.5	.500	Auto	8.9	1.35	18	1	MOT06162	4253
1/2	1725	115/230	Slv	56	8.0/4.0	1.9	.625	Auto	9.8	1.25	22		MOT06166	4114
3/4	1725	115	Slv	56	11.2	1.9	.625	Auto	9.8	1.25	25	2	MOT06167	3958
3/4	1725	115/230	Slv	56	11.2/5.6	1.9	.625	Auto	9.8	1.25	24	2	MOT06168	4115
2 Speed (NEMA 56 Frame)														
1/4	1725/1140	115	Slv	56Z	5.1	1.5	.500	Auto	9.9	1.00	18	5	MOT10192	5792C
1/3	1725/1140	115	Slv	56Z	6.4	1.5	.500	Auto	10.4	1.00	19	5	MOT10193	5793C
1/2	1725/1140	115	Slv	56Z	8.7	1.5	.500	Auto	10.4	1.00	25	5	MOT10194	5794C
1/2	1725/1140	115	Slv	56	9.2	1.9	.625	Auto	10.8	1.25	26		MOT06169	4293
1/2	1725/1140	230	Slv	56	4.6	1.9	.625	Auto	10.8	1.25	26		MOT06170	4293H
3/4	1725/1140	115	Slv	56	11.5	1.9	.625	Auto	11.3	1.00	23	5	MOT10195	5795C

1. With shaft adapter for 5/8" shaft.
2. Class B insulation.
3. Combination mounting holes for NEMA 48 and 56 frame dimensions.
4. Canadian Standard — connected CCWLE (Reversible).
5. Canadian Standard — may be used with single pole single throw switch.
6. Open, ventilated.

Belted Fan and Blower

Emerson
Split Phase

Open Dripproof

Features

EZ-Fit®
- Extra long hub with sliding hub ring at terminal end
- Adjusts to most base lengths
- Includes shaft adapter for conversion to 5/8" shaft
- Additional expanding metal outer rings allow fit to either 2-1/4" or 2-1/2" diameter mounting

Dual Base
- 48 frame diameter motor supplied with both 56 and 48 frame bases
- Includes shaft adapter for conversion to 5/8" shaft
- Reversible

48/56 Frame
- 48 frame diameter motor on NEMA 56 base
- Includes shaft adapter for conversion to 5/8" shaft
- 3 1/2" shaft height
- Reversible

Resilient Base

HP	RPM	Volts	Brgs	NEMA Frame	Amps	Shaft Length	Shaft Dia.	Protector	Total Length	S.F.	Ship Wgt.	Notes	ServiceFirst Item #	Mfg. #
Single Speed (48/56 Frame)														
1/4	1725	115	Slv	56Z	4.4	1.6	.500	Auto	9.4	1.35	16		MOT06171	1194
1/3	1725	115	Slv	56Z	5.4	1.6	.500	Auto	9.9	1.35	18		MOT06172	1193
Single Speed Dual Base														
1/4	1725	115	Slv	56Z	4.4	1.6	.500	Auto	9.4	1.35	16		MOT06173	2758
1/3	1725	115	Slv	56Z	5.4	1.6	.500	Auto	9.9	1.35	19		MOT06174	2759
1/2	1725	115/230	Slv	56Z	7.8/3.9	1.6	.500	Auto	10.4	1.25	22		MOT06175	3022
Single Speed, EZ-Fit®, Base Not Included														
1/4	1725	115	Slv	None	5.0	1.6	.500	Auto	9.5	1.35	12	1	MOT06178	3863
1/3	1725	115	Slv	None	5.3	1.6	.500	Auto	10.0	1.35	15	1	MOT06179	3864
1/2	1725	115	Slv	None	7.8	1.6	.500	Auto	11.0	1.25	18		MOT06180	3865

1. Class B insulation.

Fits Base Lengths		ServiceFirst	Mfg.
Minimum	Maximum	Item #	#
6.4	7.5	MOT06178	3863
6.9	8.0	MOT06179	3864
7.9	9.0	MOT06180	3865

Belted Fan and Blower

Emerson
Capacitor Start

Open Dripproof

Features
- 40°C ambient
- NEMA dimensions
- Class A insulation
- Reversible rotation by easy reconnection
- Suitable for all angle operation
- Automatic thermal overload protector
- NEMA service factors
- Threaded conduit hole, except 299
- Dual voltage easily changed by reconnection

Resilient Base

HP	RPM	Volts	Brgs	NEMA Frame	Amps	Shaft Length	Shaft Dia.	Protector	Total Length	S.F.	Ship Wgt.	Notes	ServiceFirst Item #	Mfg. #
Single Speed														
1/3	1725	115/208-230	Slv	48	6.0/3.0	1.5	.500	Auto	9.9	1.35	20		MOT06182	180
1/2	3450	115/208-230	Slv	48	8.6/4.3	1.5	.500	Auto	9.9	1.25	16		MOT06183	298
1/2	1725	115/208-230	Slv	56	7.4/3.7	1.9	.625	Auto	9.3	1.25	22		MOT06184	1790
3/4	3450	115/208-230	Slv	48	9.2/4.6	1.5	.500	Auto	10.4	1.25	22		MOT06185	430
3/4	1725	115/208-230	Slv	56	11.4/5.7	1.9	.625	Auto	10.8	1.25	27		MOT06186	1893
1	3450	115/208-230	Slv	48Z	11.6/5.8	1.9	.625	Auto	11.3	1.25	22		MOT06187	431
1	1725	115/230	Slv	56	14.0/7.0	1.9	.625	Auto	11.8	1.25	29	1	MOT10196	3187C
1	1725	115/208-230	Slv	56	14.0/7.0	1.9	.625	Auto	11.8	1.25	30		MOT06188	1769
1 1/2	3450	115/230	Ball	56	17.0/8.5	1.9	.625	Auto	11.9	1.15	29		MOT06189	299
1 1/2	1725	115/208-230	Ball	56	22.4/11.2	1.9	.625	Auto	12.8	1.15	30		MOT06190	4242

1. Canadian Standard — connected CCWLE (Reversible).

Oil Burner

Emerson
Split Phase

Totally Enclosed When Mounted

Features
- 40°C ambient
- NEMA dimensions
- 20" leads, located at 3 o'clock viewed from end opposite shaft
- 1.0 service factor
- Reversible rotation, except as noted
- Class A insulation
- 56N frame has 2 holes and screws for mounting outlet box
- Manual reset thermal overload protector
- 56N flange is totally enclosed, 48M and 48N flange are ventilated
- All angle sleeve bearing

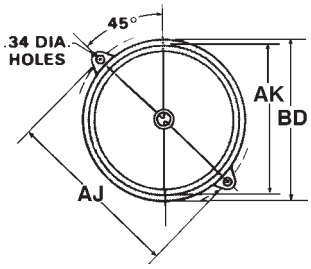

OEM Direct Replacements

HP	RPM	Volts	Brgs	NEMA Frame	Amps	Shaft Length	Shaft Dia.	Protector	Total Length	Ship Wgt.	Notes	ServiceFirst Item #	Mfg. #
Beckett, Carlin, Ducane, Wayne Home													
1/7	3450	115	Slv	48M	2.0	2.0	.500	Man	7.2	10	1	MOT06255	5866
1/5	3450	115	Slv	48M	3.2	2.0	.500	Man	7.8	15	1	MOT10197	2808
Lennox Furnace													
1/6	1725	115	Slv	56N	3.4	2.0	.500	Man	7.9	14	2	MOT06254	3251

1. Non-reversible.
2. Similar to 3250, except 4 holes in frame band for mounting transformer box.

Flange Mounted, Totally Enclosed, Non-Ventilated When Mounted

HP	RPM	Volts	Brgs	NEMA Frame	Amps	Shaft Length	Shaft Dia.	Protector	Total Length	Ship Wgt.	Notes	ServiceFirst Item #	Mfg. #
Single Speed													
1/8	3450	115	Slv	48M	2.4	2.0	.500	Man	7.1	21		MOT06244	1981
1/8	3450	115	Slv	48N	2.4	2.0	.500	Man	7.1	11		MOT06245	2097
1/8	1725	115	Slv	48N	2.4	2.0	.500	Man	7.6	14	3	MOT06246	3196
1/7	3450	115	Slv	48M	2.4	2.0	.500	Man	7.3	11		MOT06248	3083
1/6	1725	115	Slv	48N	3.1	2.0	.500	Man	7.6	15		MOT10198	3252
1/4	3450	115	Slv	48N	3.7	2.0	.500	Man	8.3	15		MOT06250	2302
1/3	1725	115	Slv	56N	5.0	2.3	.500	Man	10.5	25	4	MOT06253	3580

3. Removable face plate.
4. 5/8" shaft adapter and key packed with motor.

NEMA Frame	Bolt Circle AJ	Rabbet Diameter AK	Outside Diameter BD
48M	6.75"	5.500"	6.25" maximum
48N, 56N	7.25"	6.375"	7.00" maximum

Hot Water Circulating Pump

Emerson Split Phase

Open Dripproof

Features

- 40° ambient
- Cat. 2762 and 2777 have special diameter hub rings to fit existing Bell & Gossett brackets
- Reversible rotation
- Resilient hub rings
- Class A insulation
- Special balance for quiet operation
- Automatic thermal overload protector
- All angles sleeve bearings
- 1.0 service factor, except 2762

Hub Mounted Motors to Fit Existing Bases

HP	RPM	Volts	NEMA Frame	Amps	OEM Mfg.	Shaft Length	Shaft Dia.	SF	Base Length	Ship Wgt.	Notes	ServiceFirst Item #	Mfg. #
Single Speed													
1/12	1725	115	48Y	2.9	Taco	1.2	.500	1.00	5.8	8	1,2	MOT06336	3640
1/6	1725	115	48Y	2.9	Thrush	0.8	.500	1.00	6.5	18	2	MOT06337	3740
1/6	1725	115	48Y	3.5	B & G	0.6	.500	1.00	8.2	14	2	MOT06339	2777
1/6	1725	115	48Y	3.5	B & G	0.6	.500	1.35	7.7	21	3	MOT06338	2762

Red Motor with Bracket to Replace Bell & Gossett 1/12 & 1/8 HP Motors

HP	RPM	Volts	NEMA Frame	Amps	OEM Mfg.	Shaft Length	Shaft Dia.	SF	Base Length	Ship Wgt.	Notes	ServiceFirst Item #	Mfg. #
Single Speed													
1/8	1725	115	48Y	2.7	B & G	0.6	.500	1.00	N/A	12		MOT06340	2736

1. Class B insulation.
2. Fits "Steel" Type Base.
3. Fits "Cast Iron" Type Base.

Evaporative Cooler

Emerson Split Phase

6.3" Diameter Open Dripproof

Features

- Re-oilable bearings
- Class B insulation
- CW rotation shaft end
- Zinc-phosphate stator studs and nuts
- Corrosion resistant rotor core and actuator assembly
- Industry standard hub to hub dimension
- Automatic thermal overload protector

Note: Base Kit #51 and Mounting Clamp Kit #52 available. Packed six to a carton. Also see Accessories section.

Hub Mount

HP	RPM	Volts	Brgs	NEMA Frame	Amps	Shaft Length	Shaft Dia.	Protector	Total Length	S.F.	Ship Wgt.	Notes	ServiceFirst Item #	Mfg. #
SingleSpeed														
1/3	1725	115	Slv	56Z	6.0	1.6	.500	Auto	9.4	1.00	15	1	MOT10199	7094
1/3	1725	115	Slv	56Z	6.6	1.6	.500	Auto	9.4	1.00	14		MOT10200	6764
1/2	1725	115	Slv	56Z	7.9	1.6	.500	Auto	9.4	1.00	17	1	MOT10201	7095
1/2	1725	115	Slv	56Z	8.2	1.6	.500	Auto	9.4	1.00	14		MOT10202	6768
1/2	1725	230	Slv	56Z	4.8	1.6	.500	Auto	9.4	1.00	19		MOT10203	6766
3/4	1725	115	Slv	56Z	11.0	1.6	.500	Auto	9.4	1.00	19	1	MOT10204	7096
3/4	1725	115	Slv	56Z	10.5	1.6	.500	Auto	9.4	1.00	18		MOT10205	6769
3/4	1725	230	Slv	56Z	5.4	1.6	.500	Auto	9.4	1.00	20		MOT10206	6771
1	1725	115/230	Ball	56	15.1/7.5	1.9	.625	Auto		1.00	27	2,3,4	MOT06207	5149
2 Speed														
1/3	1725/1140	115	Slv	56Z	6.4	1.6	.500	Auto	9.4	1.00	17	1	MOT10207	7097
1/3	1725/1140	115	Slv	56Z	6.4	1.6	.500	Auto	9.4	1.00	17		MOT10208	6767
1/2	1725/1140	115	Slv	56Z	8.2	1.6	.500	Auto	9.4	1.00	19	1	MOT10209	7098
1/2	1725/1140	115	Slv	56Z	8.2	1.6	.500	Auto	9.4	1.00	16		MOT10210	6765
1/2	1725/1140	230	Slv	56Z	4.5	1.6	.500	Auto	9.4	1.00	19		MOT10211	6795
3/4	1725/1140	115	Slv	56Z	10.9	1.6	.500	Auto	9.4	1.00	19	1	MOT10212	7099
3/4	1725/1140	115	Slv	56Z	10.9	1.6	.500	Auto	9.4	1.00	18		MOT10213	6770
3/4	1725/1140	230	Slv	56Z	5.5	1.6	.500	Auto	9.4	1.00	19		MOT10214	6796
1	1725/1140	115	Slv	56	13.6	1.9	.625	Auto	11.8	1.00	35	2,3,4	MOT06212	2574
1	1725/1140	230	Slv	56	7.2	1.9	.625	Auto	11.8	1.00	34	2,3,4	MOT06213	2423

1. All copper wound.
2. Capacitor start.
3. Reversible rotation by easy reconnection.
4. Includes resilient base.

Fan and Blower

Emerson Shaded Pole

3.3" Diameter Open, Air Over

Features
- Two 8-32 x 3/4" stud extensions at each end
- Self-aligning sleeve bearings
- Quiet and dependable performance
- 20" leads

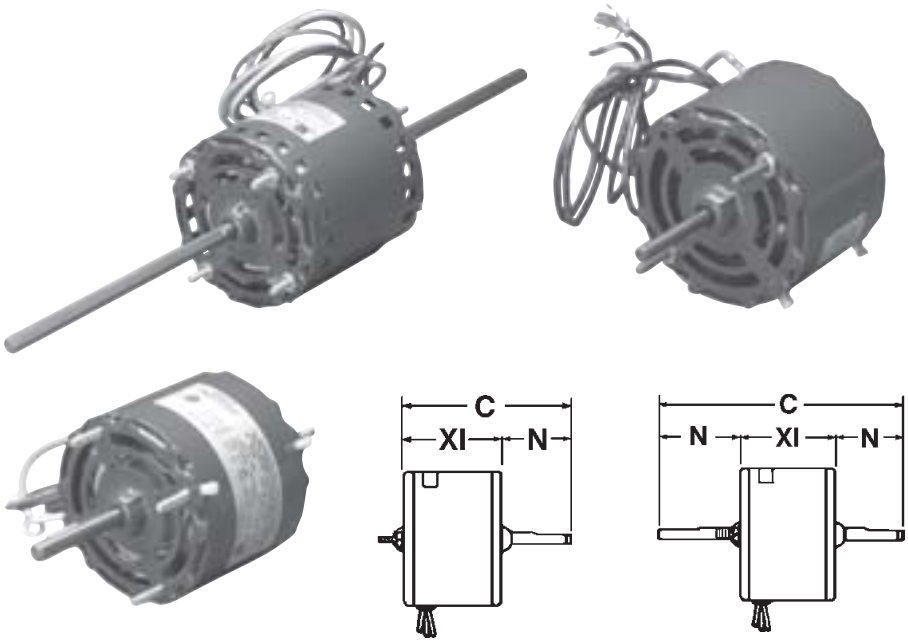

Stud Mount, (2), Both Ends

HP	RPM	Volts	Rot	Protector	Amps	Shaft N/XN	Shaft Dia.	Shell XI	Total C	Ship Wgt.	Notes	ServiceFirst Item #	Mfg. #
Single Speed (Figure A)													
1/100	1550	115	CCWLE	Auto	0.6	2.0	.250	3.0	5.4	3	2	MOT06219	3801
1/100	1550	115	CCWLE	Auto	0.6	2.0	.250	2.1	4.5	3	3	MOT06232	3813
1/70	1550	115	CCWLE	Auto	0.7	2.0	.250	2.2	4.6	3		MOT06225	3808
1/70	1550	115	CCWLE	Auto	0.7	2.0	.250	3.1	5.4	3	2	MOT06220	3802
1/70	1550	115	CCWLE	Auto	0.7	2.0	.250	2.2	4.6	3	3	MOT06234	3814
1/40	1550	115	CCWLE	Auto	1.1	2.0	.313	2.5	4.9	4		MOT06227	3809
1/40	1550	115	CCWLE	Auto	1.1	2.0	.313	3.4	5.7	4	2	MOT06221	3803
1/40	1550	115	CCWLE	Auto	1.0	2.0	.313	2.7	5.1	4	3	MOT06236	3815
2 Speed, Wall Furnace, Double End Shaft (Figure B)													
1/20	1550/2	115	CWLE	Auto	3.0	3.8/3.8	.313	3.0	10.6	4		MOT06228	1548

Stud Mount, (4), Both Ends

HP	RPM	Volts	Rot	Protector	Amps	Shaft N	Shaft Dia.	Shell XI	Total C	Ship Wgt.	Notes	ServiceFirst Item #	Mfg. #
2 Speed (Figure A)													
1/30	1550/2	115	CWLE	Auto	1.6	2.3	.313	2.7	5.3	6	1	MOT06229	865
3 Speed, Room A/C, Double end shaft, 30" leads (Figure B)													
1/15	1550/3	115	CCWLE	Auto	2.6	6.0/6.0	.313	3.5	15.5	5		MOT06230	2569

1. Similar to Fasco D181 and Universal 81.
2. Fan cooled, open.
3. Totally enclosed, air over.

Unit Bearing Fan

Emerson Shaded Pole

Totally Enclosed

Note: Minimum order quantity is six of one catalog rating.

Features

- Permanently lubricated to run for years
- Very quiet operation
- Threaded shaft with hub
- Positive feed oil system
- 6W and under are 60/50 Hz rated
- Suitable for all angle operation
- 24" cord with molded strain relief
- Includes vibration dampener hub washer, speed nut, 4 mounting screws

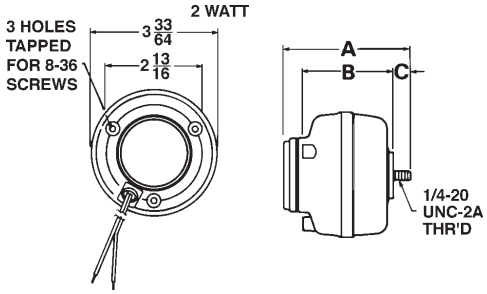

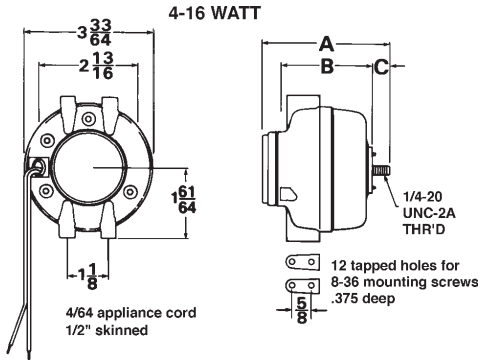

Clockwise, Lead End

HP	RPM	Volts	Amps	Protector	Shaft C	Shaft Dia.	Shell B	Total A	Ship Wgt.	Notes	ServiceFirst Item #	Mfg. #
2W	1550	115	0.2	Imp	0.5	.250	2.5	3.5	11		MOT06256	102
4W	1550	115	0.5	Imp	0.5	.250	2.5	3.5	12		MOT06257	115
5W	1550	115	0.6	Imp	0.5	.250	2.5	3.5	9		MOT06258	119
6W	1550	115	0.6	Imp	0.5	.250	2.9	3.9	12		MOT06259	117
9W	1550	115	0.8	Auto	0.5	.250	2.9	3.9	15		MOT06260	108
9W	1550	230	0.4	Auto	0.5	.250	2.9	3.9	14		MOT06261	110
16W	1550	115	1.1	Auto	0.6	.250	3.3	4.3	14		MOT06262	112
16W	1550	230	0.6	Auto	0.6	.250	3.3	4.3	14		MOT06263	114
6W	1550	480	0.2	Imp	0.5	.250	2.9	3.9	14	Repl. 3900-2005-00	MOT10215	1225
6W	1550	208-240	0.3	Imp	0.5	.250	2.9	3.9	14	Repl. 3900-2008-00	MOT10216	1226
6W	1550	277	0.2	Imp	0.5	.250	2.9	3.9	14	Repl. 3900-2008-01	MOT10217	1227
5W	1080-1230	208-240	0.3	Imp	0.5	.250	2.6	3.6	12	Repl. 3900-2010-00	MOT10218	1228
5W	1080-1230	240-277	0.3	Imp	0.5	.250	2.6	3.6	12	Repl. 3900-2010-01	MOT10219	1229

Counter Clockwise, Lead End

HP	RPM	Volts	Amps	Protector	Shaft C	Shaft Dia.	Shell B	Total A	Ship Wgt.	Notes	ServiceFirst Item #	Mfg. #
4W	1550	115	0.5	Imp	0.5	.250	2.5	3.5	11		MOT06264	103
5W	1550	115	0.6	Imp	0.5	.250	2.5	3.5	9		MOT06265	120
6W	1550	115	0.6	Imp	0.5	.250	2.9	3.9	12		MOT06266	116
9W	1550	230	0.4	Auto	0.5	.250	2.9	3.9	15		MOT06268	109
16W	1550	115	1.1	Auto	0.6	.250	3.3	4.3	14		MOT06269	111
16W	1550	230	0.6	Auto	0.6	.250	3.3	4.3	14		MOT06270	113

21 Frame Replacement

Emerson Shaded Pole

5.0" Diameter Open Dripproof

Features

- Four motors replace most original 21 frame GE motors
- Sleeve bearings
- Holes provided for attaching a BX connector
- Resilient hub rings, 2 1/4" diameter
- Rotation CCW lead end except 1468
- 30" leads
- Dual voltage easily changed by quick connects
- Class B insulation
- 3/8" diameter shafts with 1/2" adapters
- Extended thru-bolts
- Automatic thermal overload protector
- Mounting bracket provided at shaft end:
  1. Can be moved on extended-thru bolts to fit existing base
  2. Has mounting holes and bolts to match 21 frame bolt circle for stud mounting
  3. Can be resilient mounted, band mounted or end mounted.

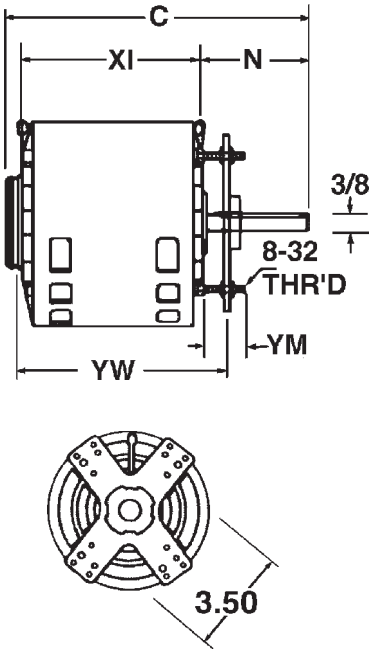

Hub Mount Bracket (2 1/4")

HP	RPM	Volts	Brgs	Amps	Shaft N	Shaft Dia.	Shell XI	Total C	Stud YM	Max. Ext. YW	Ship Wgt.	Notes	ServiceFirst Item #	Mfg. #
Single Speed														
1/20	1550	115/208-230	Slv	2.2/1.1	3.3	.375	3.3	7.1	1.5	5.6	7	1	MOT06240	1468
1/15	1550	115/208-230	Slv	2.8/1.4	3.5	.375	3.3	7.4	1.5	5.8	7		MOT06241	1469
1/10	1550	115/208-230	Slv	3.8/1.9	3.5	.375	3.6	7.6	1.5	6.1	7		MOT06242	1470
1/10	1050	115/208-230	Slv	3.8/1.9	3.3	.375	3.8	7.6	1.5	6.1	7		MOT06243	1471

1. Rotation CWLE.

Replacement Cross Reference

ServiceFirst Item #	Mfg. #	G.E. #
MOT06240	1468	DG3001, DG3002, DG3003, DG3004, DG3021, DG3022, DG3023, DG3024
MOT06241	1469	FG3101, FG3102, FG3103, FG3104, FG3121, FG3122, FG3123, FG3124
MOT06242	1470	HG3201, HG3202, HG3203, HG3204, HG3221, HG3222, HG3223, HG3224
MOT06243	1471	HG3253, HG3254, HG3275, HG3263, HG3264

OEM Replacement

Emerson

Specific Manufacturers

	ServiceFirst Item #r	Mfg. #
ADDISON/SEARS	**MOT06271**	8231

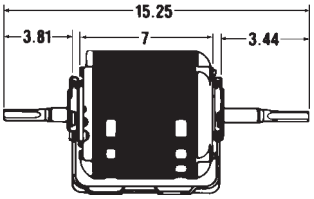

PC-29 Mobile Home Packaged A/C
Replaces: 8101-338, K55TXGGP3933, K55GGP3933

HP: 3/4 | Amps: 5.2
RPM: 1625 | Dia. 5.6"
Volts: 230 | Wt. 22 lbs.

PSC, ventilated, automatic thermal overload, sleeve bearings, double flats on 1/2" dia. shaft, 34" leads, Class B, 48Y frame, CWLE, 7.5 MFD capacitor — not supplied.

AMANA	**MOT06272**	3034

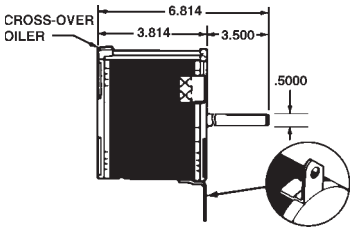

Packaged Terminal Air Conditioner Blower
Replaces: C6397901, K48HXBLF1001

HP: 1/20 | Amps: 0.5
RPM: 1075/3 | Dia. 5.0"
Volts: 208-230 | Wt. 10 lbs.

PSC, open air-over, automatic thermal overload, sleeve bearings, 34" leads, CWLE, 3 Lugs (one notched) on S.E., 4.0 MFD capacitor — not supplied.

AMANA	**MOT10220**	3035

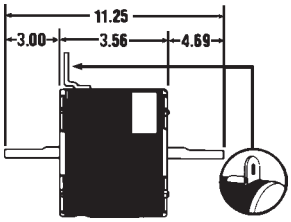

Room A/C
Replaces: K55CLZ6531, K055BSB6196, C63828-06, C64602-06

HP: 1/20 | Amps: 0.8
RPM: 1000/3 | Dia. 5.6"
Volts: 115 | Wt. 11 lbs.

PSC, totally enclosed, sleeve bearings, 40" leads, CWLE, automatic thermal overload, 1/2" dia. x 4.7" shaft with flat. 5.0 MFD capacitor — not supplied.

AMANA	**MOT06208**	3033

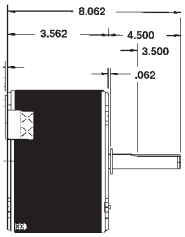

Condenser Fan
Replaces: D98432-02Q

HP: 1/12 | Amps: .56
RPM: 1200/2 | Dia. 5.6"
Volts: 208-230 | Wt. 10 lbs.

PSC, totally enclosed, sleeve bearings, 18" leads, CWLE, automatic thermal overload, 1/2" dia. shaft with flat. 4.0 MFD capacitor — not supplied.

ARKLA	**MOT06274**	8075

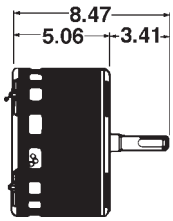

Condenser Fan
Replaces: B14506-261, K55HXGJN3986

HP: 1/2 | Amps: 3.3
RPM: 825 | Dia. 5.6"
Volts: 230 | Wt. 16 lbs.

PSC, ventilated, automatic thermal overload, ball bearings, double flats on 1/2" dia. shaft, 68" leads, CCWLE, 12.5 MFD capacitor — not supplied.

ARKLA	**MOT06273**	2342

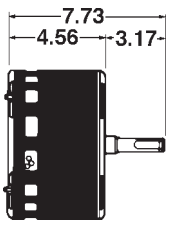

Condenser Fan
Replaces: B14506-393, B14506-363, OKB1038, K234Z

HP: 1/3 | Amps: 4.5
RPM: 825 | Dia. 5.6"
Volts: 115 | Wt. 14 lbs.

PSC, ventilated, automatic thermal overload, ball bearings, double flats on 1/2" dia. shaft, 40" leads, CCWLE, 5.0 MFD capacitor — not supplied.

OEM Replacement

Emerson

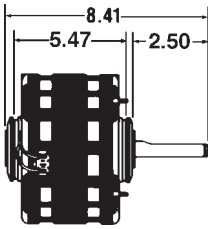

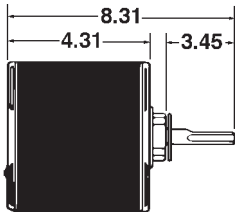

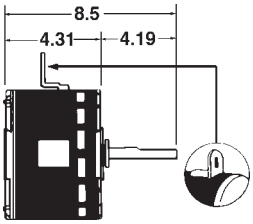

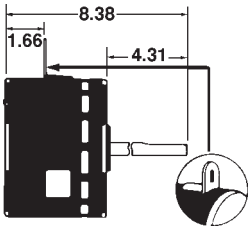

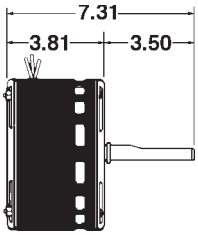

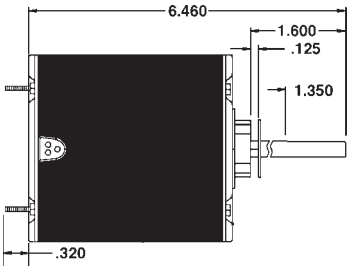

Specific Manufacturers

	ServiceFirst Item #	Mfg. #
CARRIER	**MOT06279**	1410

Direct Drive Blower
Replaces: 62814-D5, K55HXFBK5867

HP: 1/3 | Amps: 5.3 | PSC, ventilated, automatic thermal overload, sleeve bearings, 30″ leads with molex plug, CCWLE reversible, 2 1/2" hub rings, 7.5 MFD capacitor — not supplied.
RPM: 1075 | Dia. 5.6"
Volts: 115 | Wt. 16 lbs.

CARRIER	**MOT06278**	1553

Condenser Fan
Replaces: KA55ESH980, K55KND8471

HP: 1/8 | Amps: 0.9 | PSC, totally enclosed, automatic thermal overload, sleeve bearings, 46″ leads, CWLE, double flats on 1/2" dia. shaft, 7.5 MFD capacitor — not supplied.
RPM: 825 | Dia. 5.6"
Volts: 208-230 | Wt. 12 lbs.

CARRIER	**MOT06282**	3225

Condenser Fan – "The Round One"
Replaces: X222, OCB1036, D803, Universal #536

HP: 1/3 | Amps: 2.8 | Ventilated, ball bearings, 54" leads, CCWLE, reversible, single flat on 1/2" dia. shaft, 5.0 MFD capacitor — not supplied.
RPM: 1075/2 | Dia. 5.6"
Volts: 208-230 | Wt. 14 lbs.

CARRIER	**MOT06283**	3303

Condenser Fan
Replaces: HC37MZ220, F48SG6MA10, HC39VE608, F48SG6MA16, HC39ML706, F48SG6MA28, HC37ME720, F48SG6MA37, HC37ML702, F48SJ6MA28, P251-5404, Fasco D843

HP: 1/4 | Amps: 2.5 | PSC, ventilated, automatic thermal overload, sleeve bearings, 60" leads, CCWLE, reversible, 3 lug mount, 1/2" dia. shaft, 5.0 MFD capacitor — not supplied.
RPM: 1075/2 | Dia. 5.6"
Volts: 208-230 | Wt. 13 lbs.

CARRIER	**MOT06280**	1545

Condenser Fan – "The Round One"
Replaces: KA55ECD672

HP: 1/4 | Amps: 1.4 | PSC, ventilated, automatic thermal overload, sleeve bearings, 20″ leads, CCWLE, single flat on 1/2″ dia. shaft, 5.0 MFD capacitor — not supplied.
RPM: 1625 | Dia. 5.6"
Volts: 208-230 | Wt. 13 lbs.

CARRIER	**MOT10221**	3400

Condenser Fan
Replaces: HC37GE208, 5KCP39GFR62BAS

HP: 1/5 | Amps: 1.2 | PSC, ventilated, automatic thermal overload, sleeve bearings, 48″ leads, CWLE, single flat on 1/2″ dia. shaft, 7.5 MFD capacitor — not supplied.
RPM: 825 | Dia. 5.6"
Volts: 208-230 | Wt. 12 lbs.

OEM Replacement

Emerson

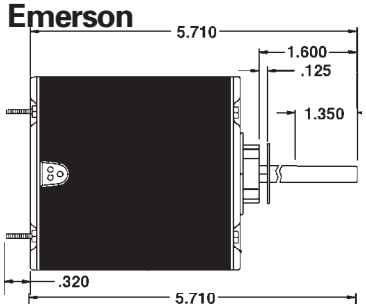

Specific Manufacturers	ServiceFirst Item #	Mfg. #
CARRIER	**MOT10222**	3401

Condenser Fan
Replaces: HC31GE232, 5KCP39BGS162S

HP: 1/12 RPM: 1100 Volts: 208-230	Amps: 0.7 Dia. 5.6" Wt. 9 lbs.	PSC, totally enclosed, automatic thermal overload, sleeve bearings, 48″ leads, CWLE, single flat on 1/2″ dia. shaft, 5 MFD capacitor — not supplied.

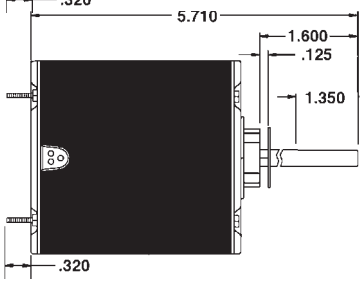

CARRIER	**MOT10223**	3402

Condenser Fan
Replaces: HC33GE233, 5KCP39BGS069S

HP: 1/10 RPM: 1100 Volts: 208-230	Amps: 0.8 Dia. 5.6" Wt. 9 lbs.	PSC, totally enclosed, automatic thermal overload, sleeve bearings, 48″ leads, CWLE, single flat on 1/2″ dia. shaft, 5 MFD capacitor — not supplied.

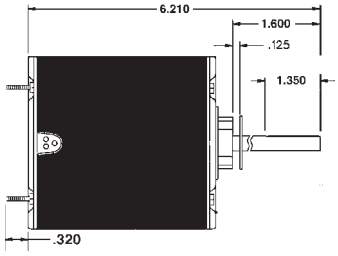

CARRIER	**MOT10225**	3404

Condenser Fan
Replaces: HC39GE236, 5KCP39BGS071S

HP: 1/4 RPM: 1100 Volts: 208-230	Amps: 1.8 Dia. 5.6" Wt. 12 lbs.	PSC, totally enclosed, automatic thermal overload, sleeve bearings, 45″ leads, CWLE, 1/2″ dia. shaft, 5 MFD capacitor — not supplied.

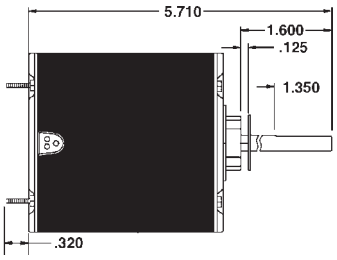

CARRIER	**MOT10226**	3405

Condenser Fan
Replaces: HC33GE208, 5KCP39BGR201BS

HP: 1/6 RPM: 1500 Volts: 208-230	Amps: 0.8 Dia. 5.6" Wt. 9 lbs.	PSC, totally enclosed, automatic thermal overload, sleeve bearings, 48″ leads, CWLE, 1/2″ dia. shaft, 5 MFD capacitor — not supplied.

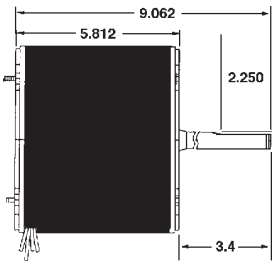

CARRIER	**MOT10227**	3320

Condenser Fan
Replaces: Fasco D802, 5KCP39PGH600C5, AOS FEH1056S

HP: 1/2 RPM: 1050 Volts: 460	Amps: 1.3 Dia. 5.6" Wt. 13 lbs.	PSC, totally enclosed, ball bearings, automatic thermal protector, 39″ leads, reversible, 1/2″ dia. shaft, 10 MFD capacitor — not supplied.

OEM Replacement

Emerson

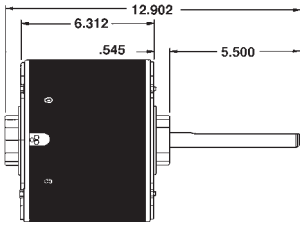

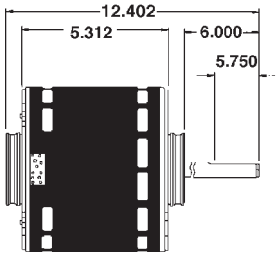

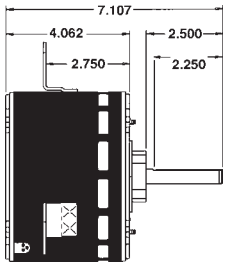

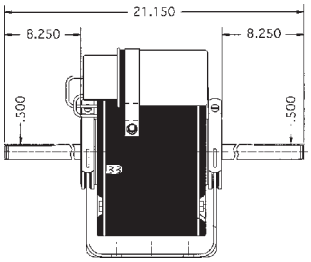

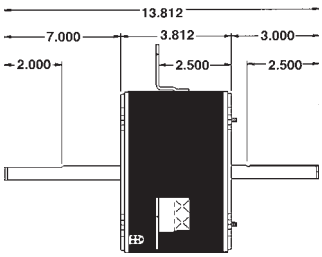

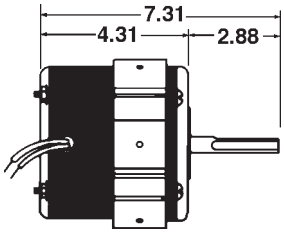

Specific Manufacturers

	ServiceFirst Item #	Mfg. #
CARRIER	**MOT10228**	3330

Condenser Fan
Replaces: D804, 5KCP39PGC238S

HP: 1/2 | Amps: 5.1 | PSC, totally enclosed, automatic thermal overload, sleeve bearings, 16″ leads, CCWLE, 7.5 MFD capacitor — not supplied.
RPM: 1075 | Dia. 5.6"
Volts: 208-230 | Wt. 20 lbs.

CARRIER	**MOT10229**	3340

Direct Drive Blower
Replaces: D838, HC45SE116, SC435X101, HC435SE116

HP: 3/4 | Amps: 12.1 | PSC, open, air over, automatic thermal overload, sleeve bearings, 27″ leads, reversible, 7.5 MFD capacitor — not supplied.
RPM: 1075/4 | Dia. 5.6"
Volts: 115 | Wt. 18 lbs.

CARRIER	**MOT10230**	3350

Condenser Fan
Replaces: Fasco D842, HC37VE230

HP: 1/5 | Amps: 1.7 | PSC, open, air over, sleeve bearings, automatic thermal protector, 39" leads, 4.0 MFD capacitor — not supplied.
RPM: 1075 | Dia. 5.6"
Volts: 208-230 | Wt. 12 lbs.

CARRIER	**MOT10231**	3300

Room A/C
Replaces: K55HXNTJ-4882, HC33ZN-042-05

HP: 1/10 | Amps: 0.85 | PSC, open, air over, sleeve bearings, 48" leads, CCWLE, 5.0 MFD capacitor supplied and mounted.
RPM: 1550/3 | Dia. 5.6"
Volts: 220 | Wt. 11 lbs.

CARRIER	**MOT10232**	3360

Room A/C
Replaces: D848, HC37MB-730, 51PH124275

HP: 1/5 | Amps: 1.3 | PSC, totally enclosed, sleeve bearings, 3 speeds, automatic thermal protector, 51″ leads, 3.0 MFD capacitor — not supplied.
RPM: 1040/3 | Dia. 5.6"
Volts: 265-277 | Wt. 12 lbs.

COPELAND	**MOT06284**	1527

Condenser Fan
Replaces: 050-0242-00, 050-0103-00, F48NY741

HP: 1/6 | Amps: 2.8 | Shaded pole, ventilated, automatic thermal overload, sleeve bearings, 26″ leads, CWLE, double flats on 1/2″ dia. shaft, special mounting ring on shell.
RPM: 1550 | Dia. 5.0"
Volts: 230 | Wt. 13 lbs.

OEM Replacement

Emerson

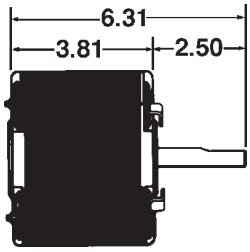

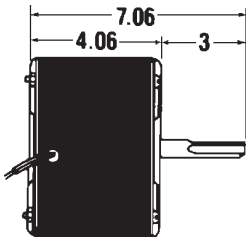

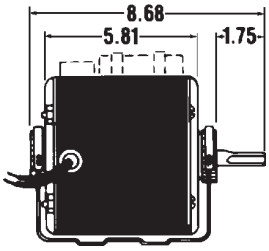

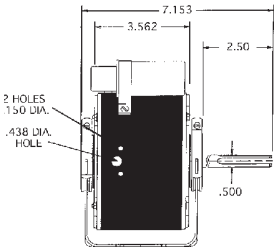

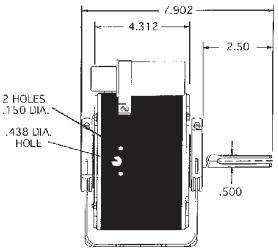

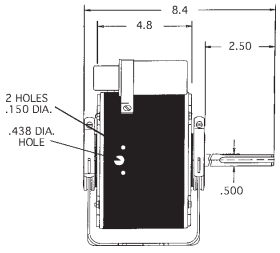

Specific Manufacturers	ServiceFirst Item #	Mfg. #
COPELAND	**MOT06285**	1989

Condenser Fan – Head Cooling
Replaces: 050-0167-002, F48BGP1092, 5KSP29BG5012S, 5KSP21DG2162

HP: 1/20 RPM: 1550/1300 Volts: 230	Amps: 1.3 Dia. 5.0" Wt. 10 lbs.	Shaded pole, 60/50 Hz, enclosed except shaft end, automatic thermal overload, sleeve bearings, CWLE, tapped mounting bracket on 1/2 dia. shaft end.

COPELAND **MOT06286** 6124

Condenser Fan
Replaces: 050-0238-00, K55BZY1439, 5KCP39GG-3537S, 050-0107-01

HP: 1/4 RPM: 1550 Volts: 230	Amps: 2.1 Dia. 5.6" Wt. 13 lbs.	PSC, ventilated, automatic thermal overload, sleeve bearings, 32" leads, CWLE, double flats on 1/2" dia. shaft, 5.0 MFP capacitor included.

COPELAND **MOT06287** 6127

Condenser Fan
Replaces: 050-0108-00, K55ECE2645, 050-0018-00

HP: 1/3 RPM: 1625 Volts: 230	Amps: 2.4 Dia. 5.6" Wt. 17 lbs.	PSC, 50/60 Hz, totally enclosed, automatic thermal overload, sleeve bearings, 36" leads, CWLE, motor to be mounted in a horiz. position only, 4.0 MFD capacitor included and mounted.

COPELAND **MOT10233** 6128

Condenser Fan
Replaces: 050-0251-00

HP: 1/6 RPM: 1550 Volts: 208-230	Amps: 1.1 Dia. 5.6" Wt. 17 lbs.	PSC, 50/60 Hz, ventilated, automatic thermal overload, sleeve bearings, 32" leads, CWLE, double flats on 1/2" dia. shaft, horizontal mount only, 3.0 MFD capacitor included.

COPELAND **MOT10234** 6129

Condenser Fan
Replaces: 050-0250-00

HP: 1/4 RPM: 1625 Volts: 208-230	Amps: 1.5 Dia. 5.6" Wt. 17 lbs.	PSC, 50/60 Hz, ventilated, automatic thermal overload, sleeve bearings, 36" leads, CWLE, double flats on 1/2" dia. shaft, horizontal mount only, 5.0 MFD capacitor included and mounted.

COPELAND **MOT10235** 6130

Condenser Fan
Replaces: 050-0250-02

HP: 1/4 RPM: 1625 Volts: 575	Amps: 0.7 Dia. 5.6" Wt. 17 lbs.	PSC, 50/60 Hz, ventilated, automatic thermal overload, sleeve bearings, 36" leads, CWLE, double flats on 1/2" dia. shaft, horizontal mount only, 5.0 MFD capacitor included and mounted.

OEM Replacement

Emerson

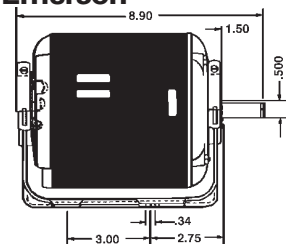

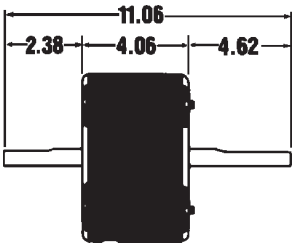

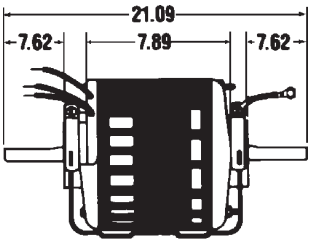

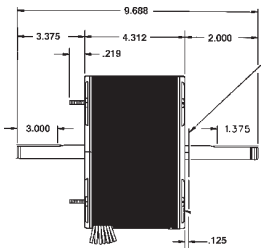

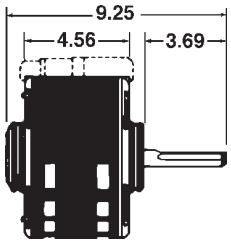

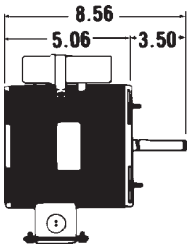

Specific Manufacturers

	ServiceFirst Item#	Mfg. #
CORNELIUS	**MOT06288**	5401

Food Service – "Slurpie" Machines
Replaces: S60JXEKF-5026, S60JXGEJ-6007, SA55JXJZS-5286, SA55JXCJC-4000

HP: 1/8 Amps: 2.2
RPM: 1140 Dia. 5.6"
Volts: 208-230 Wt. 16 lbs.

Split phase, auto protector, resilient base, conduit hole, ball bearings.

FEDDERS	**MOT06292**	5107

Room A/C
Replaces: S196-58-2, 5KCP39DGA931T

HP: 1/4 Amps: 1.9
RPM: 1075/3 Dia. 5.6"
Volts: 208-230 Wt. 13 lbs.

PSC, ventilated, automatic thermal overload, sleeve bearings, 45″ leads, CCWLE, 5.0 MFD capacitor — not supplied.

FEDDERS	**MOT06291**	2328

Room A/C
Replaces: S199-00011-001, S119-00011-002, K63TXMR1109, 5KCP45PG-133T

HP: 3/4 Amps: 4.0
RPM: 1075 Dia. 6.3"
Volts: 208-230 Wt. 34 lbs.

PSC, ventilated, automatic thermal overload, sleeve bearings, 22" leads, CCWLE, resilient base, 5/8" dia. shaft, with single flats, 10 MFD capacitor — not supplied.

FEDDERS	**MOT10236**	7385

Room A/C
Replaces: K55HXPFP-7385

HP: 1/3 Amps: 1.9
RPM: 1100/4 Dia. 5.6"
Volts: 208-230 Wt. 16 lbs.

PSC, sleeve bearings, automatic thermal protector, totally enclosed, both ends, 54" leads, CWLE, double shaft, 7.5 MFD, 440V capacitor — not supplied.

HILL REFRIGERATION	**MOT10237**	7232

Condenser Fan
Replaces: K55HCN4370, KCP39KG1369S, 3001, 82001, M-Z-008, F112, D801

HP: 1/3 Amps: 2.9
RPM: 1625 Dia. 5.6"
Volts: 208-230 Wt. 16 lbs.

PSC, ventilated, automatic thermal overload, sleeve bearings, 32" leads, 2 1/2" hub rings, CWLE reversible, 3/8" flexible connector, 6.0 MFD capacitor included and mounted.

HUSSMANN	**MOT06299**	644

Condenser Fan
Replaces: 259983, K55HXCTP9963, D890

HP: 1/2 Amps: 2.7
RPM: 1725 Dia. 5.6"
Volts: 208-230 Wt. 15 lbs.

PSC, 50/60 Hz, open end shield-OLE, automatic thermal overload, ball bearings, 36" leads, CWLE, 0.44" studs, 5.0 MFD capacitor supplied and mounted.

OEM Replacement

Emerson

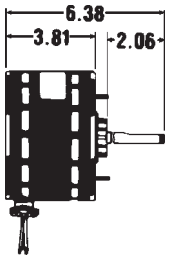

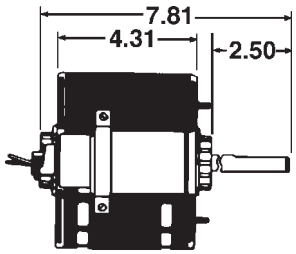

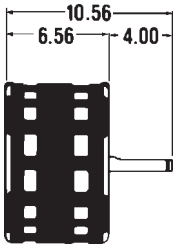

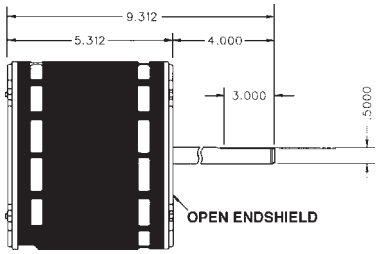

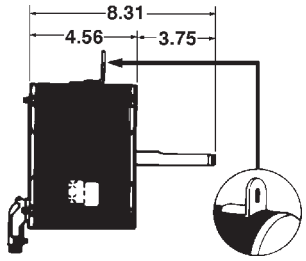

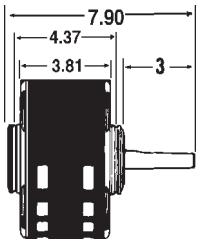

Specific Manufacturers	ServiceFirst Item #	Mfg. #
HUSSMANN	**MOT06297**	1645

Condenser Fan
Replaces: PO11-96202, K55NXKWB8574, K55HWR4884, D807

HP: 1/6 RPM: 1550 Volts: 208-230	Amps: 1.4 Dia. 5.6" Wt. 12 lbs.	PSC, ventilated, automatic thermal overload, ball bearings, 36" leads, CWLE, 1/2" studs, 3.0 MFP capacitor supplied.

HUSSMANN	**MOT06298**	1648

Condenser Fan
Replaces: PO11-96203, K55HXKWA8573, K55CLN1782

HP: 1/5 RPM: 1075 Volts: 208-230	Amps: 2.0 Dia. 5.6" Wt. 13 lbs.	Ventilated, automatic thermal overload, ball bearings, 24" leads, CWLE, 0.44" leads, 4.0 MFP capacitor supplied and mounted.

ICP	**MOT10238**	1125

Direct Drive Blower
Replaces: K55BLW6108, ICP#1008619

HP: 3/4 RPM: 900/4 Volts: 115	Amps: 11.9 Dia. 5.6" Wt. 20 lbs.	PSC, ventilated, automatic thermal overload, sleeve bearings, 30" leads, CCWLE, 1/2" dia. shaft x 4" with flat, 10 MFD capacitor — not supplied.

ICP	**MOT10239**	1126

Direct Drive Blower
Replaces: 1008415, K55BAR5894

HP: 1/3 RPM: 1075/3 Volts: 115	Amps: 7.2 Dia. 5.6" Wt. 15 lbs.	PSC, ventilated, automatic thermal protector, sleeve bearings, 21" leads, CCWLE, 3 speed, open endshield, 7.5 MFD capacitor — not supplied.

LENNOX	**MOT06300**	7994

Condenser Fan
Replaces: P-8-8041, K55FCM3264

HP: 1/3 RPM: 1075 Volts: 208-230	Amps: 2.2 Dia. 5.6" Wt. 16 lbs.	PSC, totally enclosed, automatic thermal overload, sleeve bearings, 38" leads, CCWLE, welded ear mount, 3/8" 90 degree connector, 5.0 MFD capacitor — not supplied.

LENNOX	**MOT06302**	8054

Condenser Fan
Replaces: P-8-2702, K55BWE1351, KCP39GGA124S

HP: 1/4 RPM: 1075 Volts: 230	Amps: 1.9 Dia. 5.6" Wt. 12 lbs.	PSC, ventilated, automatic thermal overload, sleeve bearings, 40" leads, CCWLE, 2 1/2" hub rings, 4.0 MFD capacitor — not supplied.

OEM Replacement

Emerson

Specific Manufacturers

	ServiceFirst Item #	Mfg. #
LENNOX	**MOT10240**	8052

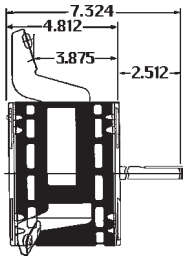

Direct Drive Blower
Replaces: Lennox 65G5901, KA55HXJAK2549, 5KCP39NGM981AS

HP: 1/3
RPM: 825/3
Volts: 230

Amps: 1.9
Dia. 5.6"
Wt. 14 lbs.

PSC, ventilated, flexible (3) ear mount, automatic thermal overload, sleeve bearings, CCWLE, 3 speed, 15 MFD capacitor — not supplied.

LENNOX	**MOT06303**	9993

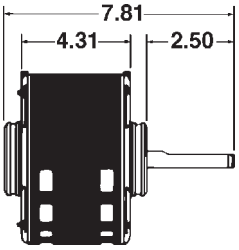

Condenser Fan
Replaces: P-8-3140, K55BZW1438

HP: 1/3
RPM: 1075
Volts: 208-230

Amps: 3.0
Dia. 5.6"
Wt. 14 lbs.

PSC, ventilated, automatic thermal overload, sleeve bearings, 20" leads, CCWLE, 2 1/2" hub rings, 5.0 MFD capacitor — not supplied.

MILLER	**MOT06304**	2166

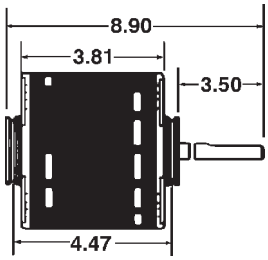

Direct Drive Blower
Replaces: D156, Universal #326

HP: 1/6
RPM: 1050
Volts: 115

Amps: 5.2
Dia. 5.6"
Wt. 10 lbs.

Shaded pole, ventilated, automatic thermal overload, sleeve bearings, 24" cord and plug, 1/2" dia. shaft.

RHEEM	**MOT06307**	591

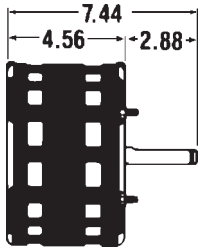

Direct Drive Blower
Replaces: 19572-01, K55GZD4276

HP: 1/3
RPM: 1075/3
Volts: 115

Amps: 7.0
Dia. 5.6"
Wt. 14 lbs.

PSC, ventilated, automatic thermal overload, sleeve bearings, 26" leads, CCWLE, 0.31" extended studs shaft end, 7.5 MFD capacitor — not supplied.

RHEEM	**MOT06305**	136

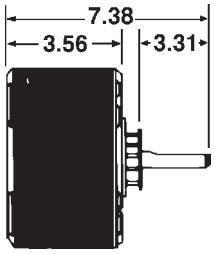

Condenser Fan
Replaces: 51-20682, K55MPZ6560

HP: 1/5
RPM: 1075
Volts: 208-230

Amps: 1.3
Dia. 5.6"
Wt. 10 lbs.

PSC, ventilated LE only, automatic thermal overload, sleeve bearings, 32" leads, 0.25 extended studs shaft end, CCWLE, 3.0 MFD capacitor — not supplied.

OEM Replacement

Emerson

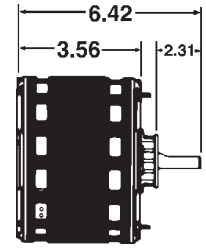

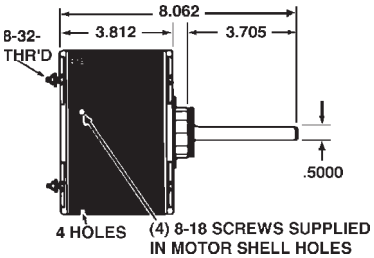

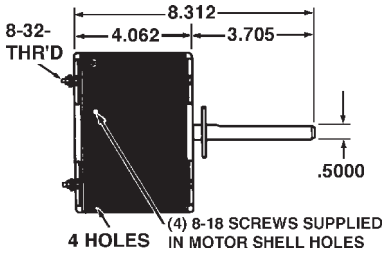

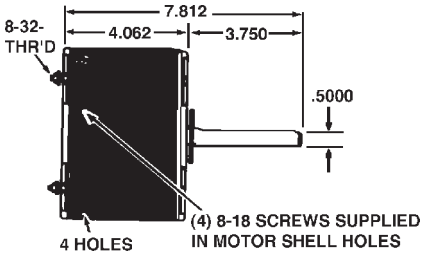

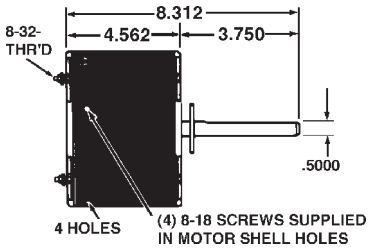

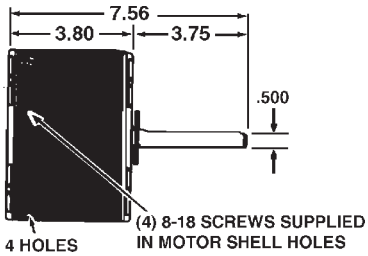

Specific Manufacturers

	ServiceFirst Item #	Mfg. #
RHEEM	**MOT06311**	3484

Direct Drive Blower
Replaces: 51-20671-01, F55HXCWT1579

HP: 1/8 RPM: 1075 Volts: 230	Amps: 1.0 Dia. 5.6" Wt. 9 lbs.	PSC, ventilated, automatic thermal overload, sleeve bearings, 28" leads, CCWLE, 1/4" extended studs, 5.0 MF capacitor — not supplied.

RHEEM	**MOT06312**	5454

Condenser Fan
Replaces: 51-20672-01, 51-20673-01, 51-20674-01, 51-20675-01, 51-20679-01, 51-20680-01, 51-20681-01, 51-20682-01, 51-21826-01, 51-21827-01, 51-21828-01, 51-21829-01, 51-21830-01, 51-21831-01

HP: 1/5 RPM: 1075 Volts: 208-230	Amps: 1.7 Dia. 5.6" Wt. 11 lbs.	PSC, totally enclosed, automatic thermal overload, sleeve bearings, 41" leads, four holes and screws supplied in shell, four 8-32 studs opposite shaft end, single flat on 1/2" dia. shaft, reversible rotation, 3.0 MF capacitor — not supplied. (5.0 MF capacitor acceptable alternate)

RHEEM	**MOT06313**	5455

Condenser Fan
Replaces: 51-20687-01, 51-20688-01, 51-20689-01, 51-20690-01, 51-21836-01, 51-21837-01, 51-21838-01, 51-21839-01, 51-21845-03, 51-23053-11, 51-41315-01, 51-41316-01, 51-41317-01

HP: 1/3 RPM: 1075 Volts: 208-230	Amps: 2.0 Dia. 5.6" Wt. 13 lbs.	PSC, totally enclosed, automatic thermal overload, sleeve bearings, 41" leads, four holes and screws supplied in shell, four 8-32 studs opposite shaft end, single flat on 1/2" dia. shaft, reversible 5.0 MF capacitor — not supplied.

RHEEM	**MOT06314**	5456

Condenser Fan
Replaces: 51-20761-91

HP: 1/8 RPM: 825 Volts: 208-230	Amps: 1.2 Dia. 5.6" Wt. 11 lbs.	PSC, totally enclosed, automatic thermal overload, sleeve bearings, 41" leads, four holes and screws supplied in shell, four 8-32 studs opposite shaft end, single flat on 1/2" dia. shaft, reversible rotation, 5.0 MF capacitor — not supplied.

RHEEM	**MOT06315**	5457

Condenser Fan
Replaces: 51-20760-91, K55MAB4123

HP: 1/6 RPM: 825 Volts: 208-230	Amps: 1.2 Dia. 5.6" Wt. 13 lbs.	PSC, totally enclosed, automatic thermal overload, sleeve bearings, 41" leads, four holes and screws supplied in shell, four 8-32 studs opposite shaft end, single flat on 1/2" dia. shaft, reversible rotation, 7.5 MF capacitor — not supplied.

RHEEM	**MOT10241**	5459

Condenser Fan
Replaces: P-8-2702, K55BWE1351, KCP39GGA124S, 51-21854-06

HP: 1/15 RPM: 1050 Volts: 208-230	Amps: 0.5 Dia. 5.6" Wt. 9 lbs.	PSC, totally enclosed, automatic thermal overload, sleeve bearings, 41" leads, four holes and screws supplied in shell, single flat on 1/2" dia. shaft, CCWLE, 3.0 MF capacitor — not supplied.

OEM Replacement

Emerson

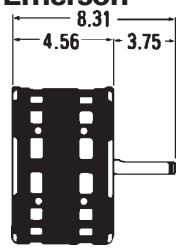

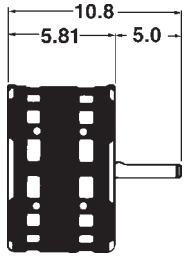

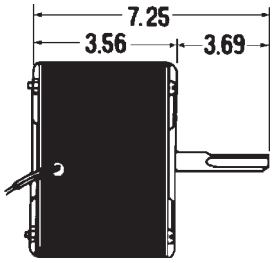

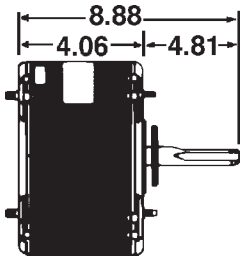

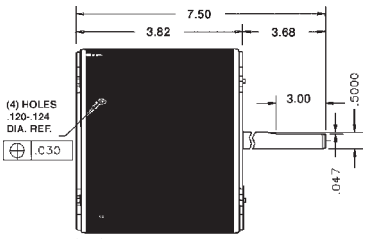

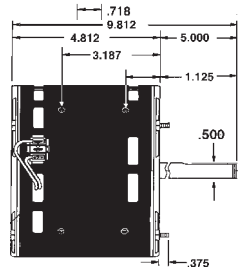

Specific Manufacturers

	ServiceFirst Item #	Mfg. #
RHEEM	**MOT10242**	5451

Direct Drive Blower
Replaces: K55NMF4760, Rheem 51-22686-01

HP: 1/2 | Amps: 6.8
RPM: 1075/3 | Dia. 5.6"
Volts: 115 | Wt. 14 lbs.

PSC, ventilated, automatic thermal overload, sleeve bearings, 18" leads, CCWLE, 1/2" dia. shaft with flat, includes 8 holes for mounting brackets, 7.5 MFD capacitor — not supplied.

RHEEM	**MOT10243**	5463

Direct Drive Blower
Replaces: K55PAD4962, Rheem 51-22700-01, 51-23017-42, K55BWDRJ7033, ICP HQ1010263EM, 5452, K55HXDRJ0011

HP: 3/4 | Amps: 10.6
RPM: 1075/4 | Dia. 5.6"
Volts: 115 | Wt. 20 lbs.

PSC, ventilated, automatic thermal overload, ball bearings, 17" leads, CCWLE, reversible, 1/2" dia. x 5" shaft with flat, includes 8 holes for mounting brackets, 15 MFD capacitor — not supplied.

RHEEM	**MOT10244**	5453

Condenser Fan
Replaces: K55JGH2667, Rheem 51-21854-01

HP: 1/6 | Amps: 0.7
RPM: 1075 | Dia. 5.6"
Volts: 208-230 | Wt. 7 lbs.

PSC, totally enclosed, automatic thermal overload, sleeve bearings, 39" leads, CCWLE, 1/2" dia x 3.7" shaft with flat, 3.0 MFD capacitor — not supplied.

RHEEM	**MOT06316**	9735

Condenser Fan
Replaces: 51-21276-01, 51-21276-02, 51-20763-01, 51-2076091, K55MFG6350, K55PAK7253, K55CNW9833

HP: 1/8 | Amps: 1.1
RPM: 825 | Dia. 5.6"
Volts: 208-230 | Wt. 11 lbs.

PSC, totally enclosed, automatic thermal overload, sleeve bearings, 36" leads, CCWLE, extended studs both ends, double flats on 1/2" dia. shaft, 5.0 MFD capacitor — not supplied.

RHEEM	**MOT10245**	5450

Condenser Fan
Replaces: 51-21854-02

HP: 1/5 | Amps: 0.7
RPM: 1075 | Dia. 5.6"
Volts: 208-230 | Wt. 11 lbs.

PSC, totally enclosed, 4 drain holes, automatic thermal overload, sleeve bearings, 39" leads, CCWLE, 3.0 MFD capacitor — not supplied.

RHEEM	**MOT09985**	5460

Direct Drive Blower
Replaces: 51-23012-41, K055MDA4122

HP: 1/2 to 1/6 | Amps: 7.3
RPM: 1075/4 | Dia. 5.6"
Volts: 115 | Wt. 17 lbs.

PSC, Multi-HP, open, air over, automatic thermal overload, sleeve bearings, 36" leads, CCWLE, reversible, kit with 4 nuts with captive star washers shipped in carton, uses 5.0, 7.5 or 10 MFD capacitor — not supplied, 8 holes in shell for brackets. See motor label.

OEM Replacement

Emerson

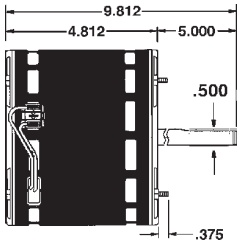

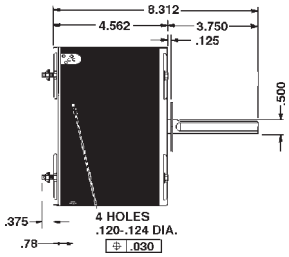

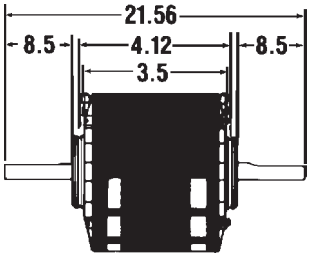

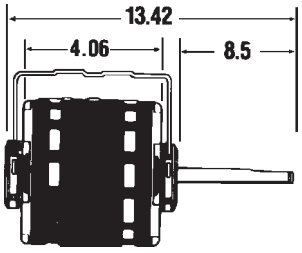

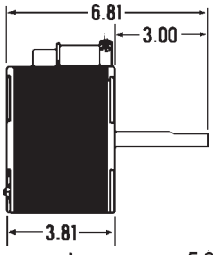

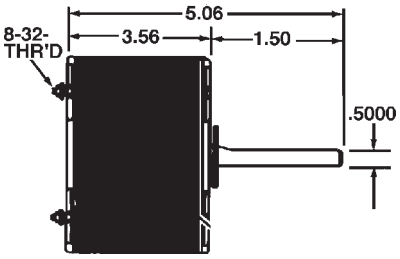

Specific Manufacturers

	ServiceFirst Item #	Mfg. #
RHEEM	**MOT09986**	5461

Direct Drive Blower
Replaces: 51-23022-41, K055MNW4335

HP: 1/2 to 1/6
RPM: 1075/4
Volts: 208-230

Amps: 3.6
Dia. 5.6"
Wt. 16 lbs.

PSC, Multi-HP, open, air over, automatic thermal overload, sleeve bearings, 36" leads, CCWLE, reversible, kit with 4 nuts with captive star washers shipped in carton, uses 5.0, 7.5 or 10 MFD capacitor — not supplied, 8 holes in shell for brackets. See motor label.

RHEEM	**MOT09987**	5462

Condenser Fan
Replaces: 51-23053-21, K055RPE5669

HP: 1/3 to 1/6
RPM: 1075
Volts: 208-230

Amps: 2.6
Dia. 5.6"
Wt. 15 lbs.

PSC, Multi-HP, totally enclosed, automatic thermal overload, sleeve bearings, 36" leads, CCWLE, reversible, uses 5.0 MFD or 7.5 MFD 370V capacitor — not supplied, 4 holes in shell for mounting. See motor label.

SINGER	**MOT06318**	1012

Commercial Fan Coil
Replaces: EWDQ-5790, K7HY605

HP: 1/8
RPM: 1075/3
Volts: 277

Amps: 0.8
Dia. 5.0"
Wt. 10 lbs.

PSC, ventilated, automatic thermal overload, sleeve bearings, 24" leads, CCWLE, 2 1/4" hub rings with split rings to increase to 1/2", 5.0 MFD capacitor — not supplied.

TRANE	**MOT01878**	1374

Fan Coil
Replaces: X700500149-01, K48BHY954, 5KSP29DK15075, MOT1878

HP: 1/30
RPM: 1075/3
Volts: 115

Amps: 0.5
Dia. 5.0"
Wt. 10 lbs.

PSC, ventilated, automatic thermal overload, sleeve bearings, 37" leads, CWLE, resilient base, 5.0 MFD capacitor supplied and mounted.

TRANE	**MOT03438**	1675

Condenser Fan
Replaces: WW94X936PSC, KSP29DK1728S

HP: 1/8
RPM: 1550
Volts: 230

Amps: 0.8
Dia. 5.0"
Wt. 9 lbs.

PSC, ventilated, band mounting, automatic thermal overload, sleeve bearings, 32" leads, CCWLE, auto protector, 1/2" dia. shaft.

TRANE	**MOT06363**	1673

Condenser Fan
Replaces: K55DJK6905, Trane D149098P01

HP: 1/8
RPM: 1625
Volts: 230

Amps: 0.7
Dia. 5.6"
Wt. 9 lbs.

PSC, totally enclosed, automatic thermal overload, sleeve bearings, 24" leads, CCWLE, 1/2" dia. x 1 1/2" shaft with flat, 4.0 MFD capacitor — not supplied.

OEM Replacement

Emerson

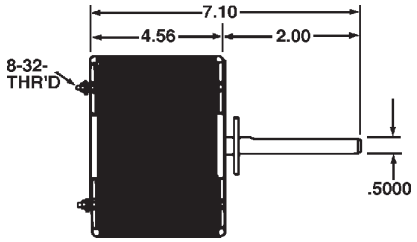

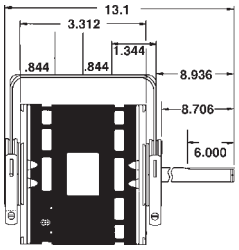

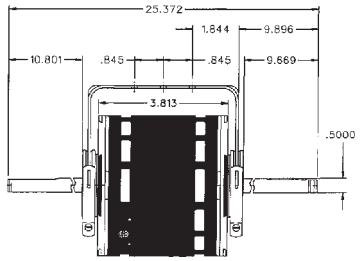

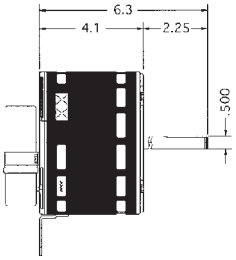

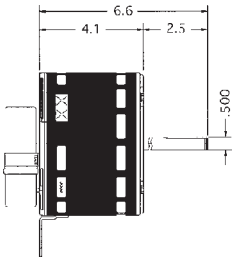

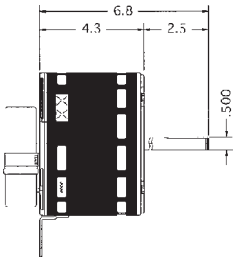

Specific Manufacturers

	ServiceFirst Item #	Mfg. #
TRANE	**MOT03419**	1674

Condenser Fan
Replaces: K55DJL6906, Trane D146983P01

HP: 1/4	Amps: 1.7	PSC, totally enclosed, automatic thermal overload,
RPM: 825	Dia. 5.6"	sleeve bearings, 35" leads, CCWLE, 1/2" dia. x 2" shaft
Volts: 230	Wt. 14 lbs.	with flat, 12.5 MFD capacitor — not supplied.

TRANE	**MOT01875**	1676

Fan and Blower
Replaces: K48BHZ0955, K48STY-3509, Trane X70500149-02-7

HP: 1/20	Amps: 0.55	PSC, open, air over, 44" leads, CWLE, 5.0 MFD
RPM: 1100/3	Dia. 5.0"	capacitor supplied and mounted.
Volts: 115	Wt. 9 lbs.	

TRANE	**MOT01877**	1090

Fan and Blower
Replaces: K48HXBJA0956, X70500149-04, MOT1877, D1090

HP: 1/15	Amps: 0.8	PSC, open, 44" leads, CWLE, 5.0 MFD capacitor
RPM: 1100/3	Dia. 5.0"	supplied and mounted.
Volts: 115	Wt. 12 lbs.	

TRANE	**MOT02852**	1678

Fan and Blower
Replaces: K48HXCNN1468, X70500269-01, MOT2852

HP: 1/16	Amps: 0.5	PSC, open, 3 mounting brackets at 120° apart, 9.25"
RPM: 810/3	Dia. 5.0"	bolt circle, CWLE.
Volts: 277	Wt. 12 lbs.	

TRANE	**MOT02853**	1679

Fan and Blower
Replaces: KA55HXHAB2059, X70500270-01, MOT2853

HP: 1/10	Amps: 0.6	PSC, open, 3 mounting brackets at 120° apart, 11" bolt
RPM: 810/3	Dia. 5.6"	circle, CWLE.
Volts: 277	Wt. 12 lbs.	

TRANE	**MOT02854**	1680

Fan and Blower
Replaces: KA55HXHAA2058, X70500271-01, MOT2854

HP: 1/5	Amps: 0.8	PSC, open, 3 mounting brackets at 120° apart, 11" bolt
RPM: 970/3	Dia. 5.6"	circle, CWLE.
Volts: 277	Wt. 12 lbs.	

OEM Replacement

Emerson

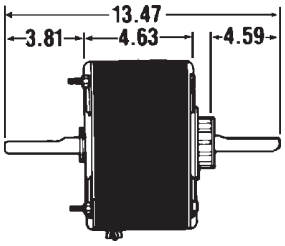

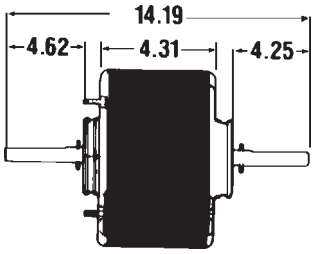

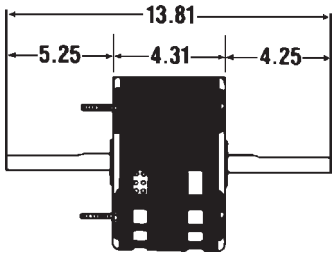

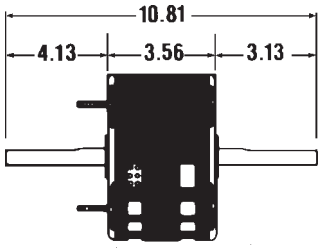

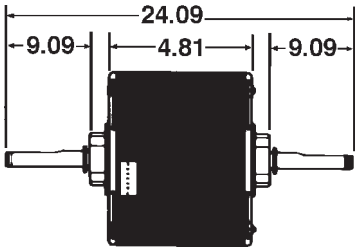

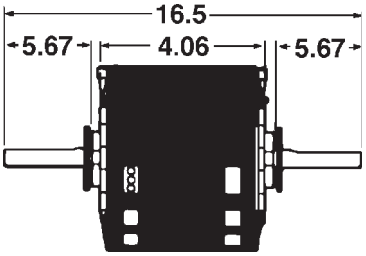

Specific Manufacturers

	ServiceFirst Item #	Mfg. #
WHIRLPOOL	**MOT06324**	8558

Room A/C
Replaces: 997346, K55HDJ4396, K55RGW7901, K55RHM7916, K55RHP7917, K55KFK8314, K55KFL8315

HP: 1/3 RPM: 1075/3 Volts: 230	Amps: 1.9 Dia. 5.6" Wt. 16 lbs.	PSC, totally enclosed, automatic thermal overload, sleeve bearings, 42" leads, CCWLE, 3/8" studs on LE, 5.0 MFP capacitor — not supplied.

WHIRLPOOL/SEARS	**MOT06322**	5108

Room A/C
Replaces: Various

HP: 1/3 RPM: 1075/3 Volts: 230	Amps: 2.3 Dia. 5.6" Wt. 16 lbs.	PSC, totally enclosed, automatic thermal overload, sleeve bearings, 33" leads, CCWLE, 2 1/2" hub rings, mounting studs, adapter base, and 5.0 MFP capacitor included.

WHIRLPOOL/SEARS	**MOT06319**	855

Room A/C
Replaces: RE120, D859, Delco Inside-Out

HP: 1/3 RPM: 1075/3 Volts: 230	Amps: 2.0 Dia. 5.6" Wt. 14 lbs.	PSC, ventilated, automatic thermal overload, sleeve bearings, 41" leads, CCWLE, tapped holes in end shield, 0.81" studs LE, 5.0 MFD capacitor — not supplied.

WHIRLPOOL/SEARS	**MOT06320**	1142

Room A/C0
Replaces: RE124, D857, Delco Inside-Out

HP: 1/8 RPM: 1075/3 Volts: 115	Amps: 2.1 Dia. 5.6" Wt. 10 lbs.	PSC, ventilated, automatic thermal overload, sleeve bearings, 41" leads, CCWLE, tapped holes in end shield, 7/8" studs LE, 5.0 MFD capacitor — not supplied.

YORK/BORG WARNER	**MOT06326**	2554

Room A/C
Replaces: 024-20797, K55RKD7948

HP: 1/2 RPM: 1075 Volts: 208-230	Amps: 2.4 Dia. 5.6" Wt. 18 lbs.	PSC, totally enclosed, automatic thermal overload, sleeve bearings, 41" leads, CWLE, single flat on 1/2" dia. shaft, 7.5 MFD capacitor — not supplied.

YORK/BORG WARNER	**MOT06325**	1124

Condenser Fan3
Replaces: F47BGM927, D1041, S2091

HP: 1/5 RPM: 1075 Volts: 208-230	Amps: 1.3 Dia. 5.0" Wt. 12 lbs.	PSC, 50/60 Hz, ventilated, automatic thermal overload, sleeve bearings, one 32" and two 25" leads, CWLE, 5.0 MFD capacitor — not supplied.

OEM Replacement

Emerson

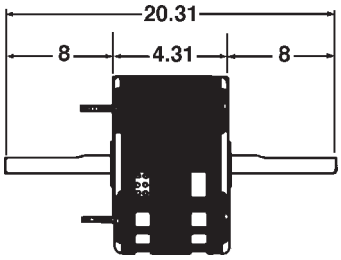

Multiple Manufacturers

	ServiceFirst Item #	Mfg. #
AMC WIZARD, CHRYSLER, COLDSPOT, EMERSON QUIETKOOL, GIBSON, HOT POINT, KELVINATOR, PENNCREST, PHILCO	**MOT06328**	7024

Room A/C

HP: 1/3 RPM: 1365/3 Volts: 230	Amps: 2.7 Dia. 5.6" Wt. 8 lbs.	PSC, ventilated, automatic thermal overload, sleeve bearings, 26" leads, CCWLE, 5.0 MFD capacitor — not supplied.

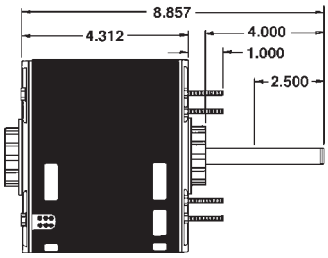

ARVIN, BOHN, COLEMAN	**MOT10032**	1391

Direct Drive Blower
Replaces: 391, D151, A6262, 5002-M 3400A312

HP: 1/4 RPM: 1050/3 Volts: 208-230	Amps: 1.5 Dia. 5.0" Wt. 12 lbs.	PSC, automatic thermal protector, sleeve bearings, 33" leads, CCWLE, reversible, 4 additional mounting studs included separately, endshields open, both ends, 7.5 MFD capacitor – not supplied.

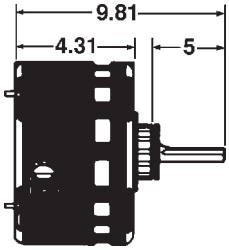

CARRIER, COLEMAN, FRIEDRICH, GAFFERS & SATTLER, RHEEM, YORK	**MOT06331**	8008

Condenser Fan

HP: 1/3 RPM: 1075/2 Volts: 230	Amps: 2.2 Dia. 5.6" Wt. 13 lbs.	PSC, ventilated, automatic thermal overload, sleeve bearings, 33" leads, 36" leads, CCWLE, reversible, extended studs, BX connector, double flats on 1/2" dia. shaft, 5.0 MFD capacitor – not supplied.

OEM Replacement

Emerson

Multiple Manufacturers

	ServiceFirst Item #	Mfg. #
CARRIER, COLEMAN, FRIEDRICH, GAFFERS & SATTLER, RHEEM, YORK	**MOT06332**	8009

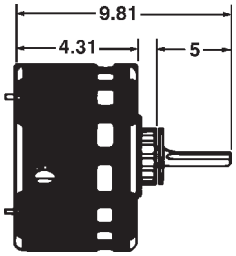

Condenser Fan

HP: 1/4
RPM: 1075/2
Volts: 230

Amps: 2.0
Dia. 5.6"
Wt. 13 lbs.

PSC, ventilated, automatic thermal overload, sleeve bearings, 33" leads, 36" leads, CCWLE, reversible, extended studs, BX connector, double flats on 1/2" dia. shaft, 5.0 MFD capacitor – not supplied.

DAY & NIGHT, RHEEM, WEATHERKING, ADDISON	**MOT06333**	8537

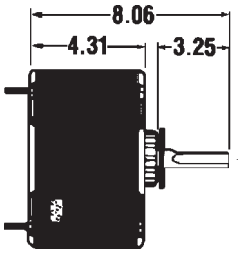

Condenser Fan

Replaces: 8101-193, 8101-279, 19906-01-01, 18471-01-05, 05-1198, F55BWM1119, K55EBC2608, F54CKY1397, 55CDR1259, F55CSH1352, K55ERC3004

HP: 1/5 or 1/8
RPM: 1075/2
Volts: 230

Amps: 1.4/0.8
Dia. 5.6"
Wt. 13 lbs.

PSC, ventilated LE, automatic thermal overload, sleeve bearings, 44" leads, CCWLE, 5.0 MFP capacitor — not supplied.

GIBSON, KELVINATOR	**MOT06293**	3228

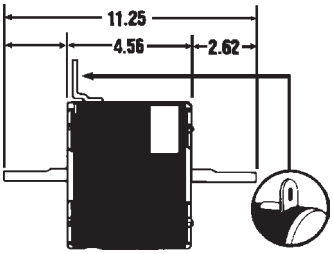

Room A/C

Replaces: RE167, D854, OBL1034

HP: 1/3
RPM: 1365/3
Volts: 208-230

Amps: 2.4
Dia. 5.6"
Wt. 14 lbs.

PSC, ventilated, automatic thermal overload, sleeve bearings, 30" leads, CCWLE, double flat on 1/2" dia. shaft, 5.0 MFP capacitor — not supplied.

GIBSON-BELDING, KELVINATOR	**MOT06334**	1152

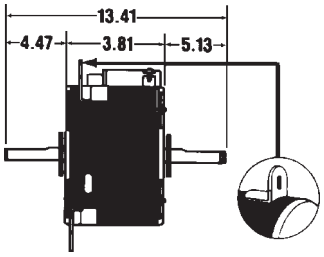

Room A/C

Replaces: RE133, 80431

HP: 1/5
RPM: 1075/3
Volts: 230

Amps: 1.4
Dia. 5.6"
Wt. 13 lbs.

PSC, ventilated, automatic thermal overload, sleeve bearings, 33" leads, CCWLE, 120° mounting lugs, 5.0 MFD capacitor included and mounted.

Rescue Motors

Emerson
Direct Drive Applications

3/4 HP Motor

ServiceFirst

Item Number	**Catalog Number**
MOT10274	5470 (115V)
MOT10275	5471 (208-230V)

Features
Includes Extended Mounting Studs, Res. Rings, Easy Reversing Connections and Ball Bearings.
Wt. 21 lbs.

Motor To Replace	Speeds To Use* (Color/Approx. RPM) Cooling	Heating	370V Capacitor	5470 115V FLA	5471 208-230V FLA
3/4 HP	High (Black/1110)	Med-Hi (Blue/1080) or Med-Low (Yellow/1010)	20 mfd	8.1	3.8
1/2 HP	High (Black/1130)	Med-Low (Yellow/1090) or Low (Red/1035)	10 mfd	6.6	3.7
1/3 HP	Med-Hi (Blue/1150)	Med-Low (Yellow/1130) or Low (Red/1100)	10 mfd	4.6	2.5
1/4 HP	Med-Low (Yellow/1150)	Low (Red/1130)	10 mfd	3.8	1.8
1/5 HP	Low (Red/1140)	Low (Red/1140)	10 mfd	3.1	1.7

*RPM data from cold motor at nominal horsepower. Actual load will determine effective rpm.

1/2 HP Motor

ServiceFirst

Item Number	**Catalog Number**
MOT09985	5460 (115V)
MOT09986	5461 (208-230V)

Features
Now Includes Extended Mounting Studs, Res. Rings, Easy Reversing Connections.
Wt. 17 lbs.

Motor To Replace	Speeds To Use* (Color/Approx. RPM) Cooling	Heating	370V Capacitor	5460 115V FLA	5461 208-230V FLA
1/2 HP	High (Black/1100)	Med-Hi (Blue/1050) or Med-Low (Yellow/825)	10 mfd	7.3	3.6
1/3 HP	High (Black/1120)	Med-Hi (Blue/1090) or Med-Low (Yellow/1030)	5 mfd**	6.9	3.5
1/4 HP	Med-Hi (Blue/1125)	Med-Low (Yellow/1090) or Low (Red/1010)	5 mfd**	5.5	2.8
1/5 HP	Med-Low (Yellow/1110)	Low (Red/1060)	5 mfd**	3.6	1.9
1/6 HP	Low (Red/1085)	Low (Red/1085)	5 mfd**	2.8	1.3

*RPM data from cold motor at nominal horsepower. Actual load will determine effective rpm.
**Using a 7.5 mfd/370V capacitor will result in an approximately 10% stronger motor. This can be used where there is more air flow needed.

Rescue Motors

Emerson
Condenser Fan Motor

1/3 HP Motor

ServiceFirst Item Number MOT09987

Catalog Number 5462 (208-230V)

Features
Now With Ball Bearings

Motor To Replace	Speed To Use* (Color/RPM)	230V*** Capacitor	FLA
1/3 HP	High (Black/1110)	5 mfd***	2.6
1/4 HP	High (Black/1135)	5 mfd***	2.5
1/5 HP	Low (Red/1110)	5 mfd***	2.0
1/6 HP	Low (Red/1125)	5 mfd***	1.8

*RPM data from cold motor at nominal horsepower. Actual load will determine effective rpm.
***Note: at 208V a 7.5 mfd/370V capacitor should be used. Amps will be similar.

Tech Tip

Multi-HP motors, like Rescue™ and Chameleon™ are great "truck stock" motors. They can be used to replace dozens of standard motors.

Accessories

Emerson
Provide maximum flexibility in applying standard replacement motors to various applications

Accessory	Description	Number Per Kit	ServiceFirst Item #	Mfg. #
	Shaft Conversion Set. Each set includes 1 shaft adapter and 1 key (converts 1/2″ shaft to 5/8″ key)	10 sets	KIT02400	1
	Hub ring set — 2 1/4″ diameter (2 per set)	1 set	KIT02401	9
	Hub ring set — 2 1/2″ diameter (2 per set)	1 set	KIT02402	10
	Base clamp mounting hardware—2 1/2″ diameter. Each set includes all hardware for one motor.	6 sets	KIT02403	52
	Belly Band Mount adjustable ear mount for 4.8″ and 5.6″ diameter motor (expanding ring type)	6 mounts	KIT02405	13
	Belly Band Mount adjustable ear mount for 5.6″ diameter motor (double wire type)	1 mount	KIT02406	25
	One kit equals 1 carton of 144 studs and 288 nuts. For resale convenience we have packaged 12 studs and 24 nuts in a plastic bag, twelve bags to each carton. Price is for complete carton. 8 1/2″ long 8x32 thread stator studs and nuts	12 bags, with12 studs and 24 nuts in each bag	KIT02408	55
	NEMA 56C flange	1 flange	KIT02410	56
	Direct drive blower mounting ring set—double wire type Each set includes motor support ring—3 rubber mounting bushings with sleeves and mounting screws For 4.8″ diameter motor — 9 9/32″ blower mount dia.	1 set	KIT02411	16
	For 5.6″ diameter motor — 10″ blower mount dia.	1 set	KIT02412	17

Accessories

Emerson

Provide maximum flexibility in applying standard replacement motors to various applications

Accessory	Description	Number Per Kit	ServiceFirst Item #	Mfg. #
	Direct drive belly band blower mounting ring set – E Band – torsion type. Each set includes motor support ring with welded ears. Mounting ears have dual mounting holes to fit either blower mount diameter For 4.8″ diameter motor — 9″ or 10″ blower mount dia.	1 set	**KIT02413**	43
	For 5.6″ diameter motor — 9″ or 10″ blower mount dia.	1 set	**KIT02414**	44
	Hub length adapter set Each set includes two 2 1/4″ resilient mounting rings and four metal outer rings to convert to 2 1/2″ rings. (Fits 5.0″ and 5 5/8″ diameter motors.) Also includes 10-32 studs for adaptation to 21 frame and 8-32 screws for extended studs for 5.0″ and 5.6″ frame	1 set	**KIT02415**	27
	Drip shield for condenser fan motors — 6 3/8" dia. with 1/2" diameter shaft hole for NEMA 42, 48 or 56Z frame motors	1 shield	**KIT02416**	26

Resilient Base Cradle Kits for PSC and Shaded Pole Motors
Refer to XD dimension on catalog pages to determine base length required.
Each kit includes one cradle base, 2 base clamp assemblies and 2 hub rings, unless otherwise noted.

Shaft Height	Hub to Hub (XD) Length	Hub Ring Diameter	ServiceFirst Item #	Mfg. #
2 5/8	4	2 1/4	KIT02417	45
2 5/8	4 1/4	2 1/4	KIT02418	46
2 5/8	4 1/4	2 1/2	KIT02419	35
2 5/8	5	2 1/2	KIT02420	36
3	4 1/8	2 1/2	KIT02421	3
3	4 3/8	2 1/2	KIT02422	30
3	4 5/8	2 1/2	KIT02423	7
3	4 7/8	2 1/2	KIT02424	4
3	5 1/8	2 1/2	KIT02425	19*
3	5 3/8	2 1/2	KIT02426	32
3	6 1/2	2 1/2	KIT02427	38
3	7	2 1/4	KIT02428	11
3 1/2	4 1/8	2 1/2	KIT02429	5
3 1/2	4 3/8	2 1/2	KIT02430	31
3 1/2	4 5/8	2 1/2	KIT02431	8
3 1/2	4 7/8	2 1/2	KIT02432	6
3 1/2	5 1/8	2 1/2	KIT02433	20*
3 1/2	5 3/8	2 1/2	KIT02434	34
3 1/2	6 1/2	2 1/2	KIT02435	37
3 1/2	7	2 1/2	KIT02436	12
3 1/2	7 1/2	2 1/2	KIT02437	51**

*Includes base and clamps but not hub rings.
**Includes six bases but no hub rings or clamps.

Air Moving Motors

GE Commercial Motors by REGAL-BELOIT

Furnace Blower, Belt Drive

Single Phase

Features
- Ball bearings
- Reversible rotation
- 48Y frames have mounting holes for both 48 and 56 frame

Applications
Designed for replacement of virtually any NEMA 48 and 56 frame belt drive furnace blower motors. PDQ models have 1 1/2″ extended splined hub on opposite shaft end for quick and easy positioning of resilient ring to properly fit the pre-existing motor base.

Split phase - open - resilient base

HP	RPM	Volts	NEMA Frame	SF	PROT	Base	FLA @ NP	Cat. #	ServiceFirst Item #
1/4	1725	115	48Y	1.35	Auto	RB	5.1	4701	MOT11844
1/3	1725	115	48Y	1.35	Auto	RB	6.6	4706	MOT11523
1/2	1725	115	48Y	1.25	Auto	RB	7.9	4708	MOT11522

Direct Drive Furnace & Central Air Conditioning

Single Phase

Features
- Reversible rotation
- Mounting holes in shell for capacitor bracket
- Designed for 370 Volt capacitor (not furnished)
- 4″ shaft extension
- Extended clamp screws on shaft end with a ring kit provided
- Ring kit allows both 2 1/4″ and 2 1/2″ resilient ring mounting
- Automatic thermal overload protection

Applications
Designed for continuous air over applications, such as furnace blowers or central air handling units with single shaft requirements.

Permanent split capacitor - 5 1/2" diameter - two & three speed

HP	RPM	Speeds	Volts	Base	Rotation	FLA @ NP	C Dim.	Cat. No.	ServiceFirst Item #
1/4	1625	3	208-230	2RR	CCW/CW	1.2	9.10	3993	MOT10030
	1075	3	115	2RR	CCW/CW	4.2	9.10	3583	MOT07965
	1075	3	208-230	2RR	CCW/CW	2.0	9.10	3584	MOT07996
1/3	1075	3	115	2RR	CCW/CW	6.1	3585	9.40	MOT07967
	1075	3	208-230	2RR	CCW/CW	2.7	3586	9.40	MOT07968
1/2	1075	3	115	2RR	CCW/CW	9.0	3587	10.40	MOT07969
	1075	3	208-230	2RR	CCW/CW	4.3	3588	10.10	MOT07970
3/4	1075	3	115	2RR	CCW/CW	11.2	3589	10.40	MOT07971
	1075	3	208-230	2RR	CCW/CW	5.0	3590	10.40	MOT07972

Air Moving Motors

GE Commercial Motors by REGAL-BELOIT

Chameleon™ Multi-Horsepower Motors

Single Phase

Features

- Permanent split capacitor
- Automatic thermal overload protection
- Ball and sleeve bearings
- Holes in motor shell for mounting brackets
- Different capacitor/speed combinations to fit various HP applications
- Class B insulation
- Extended clamp screws and resilient rings to fit multiple mounting requirements

Applications

Designed for continuous air over applications, such as direct drive residential, commercial and industrial air conditioners, fan and blowers.

Direct drive fan & blower

HP	RPM	Spds	Volts	Base	Rotation	FLA @ NP	A Bearings	C Dim.	Cat. No.	ServiceFirst Item #
1/2	1075	4	115	2RR	CCW/CW	6.2	Sleeve	10.64	3463	MOT11725
	1075	4	208-230	2RR	CCW/CW	2.7	Sleeve	10.64	3464	MOT11726
3/4	1075	4	115	2RR	CCW/CW	8.4	Ball	11.89	3466	MOT11728
	1075	4	208-230	2RR	CCW/CW	4.2	Ball	10.30	3467	MOT11729

Capacitor/speed selection guide

1/2 HP Direct Drive Motors

Motor HP	Capacitor	Speeds to Use	MOT11725 FLA	MOT11726 FLA
1/2	10/370	All Speeds	6.2	2.7
1/3	5/370 or 7.5/370*	All Speeds	6.1	2.6
1/4	5/370 or 7.5/370*	Med-Hi Med-Lo:Lo	4.4	1.9
1/5	5/370 or 7.5/370*	Med-Lo:Lo	3.2	1.4
1/6	5/370 or 7.5/370*	Lo	2.4	1.1

* Using a 7.5 MFD/370V capacitor will result in approximately 10% stronger motor.

3/4 HP Direct Drive Motors

Motor HP	Capacitor	Speeds to Use	MOT11728 FLA	MOT11729 FLA
3/4	20/370	All Speeds	8.4	4.2
1/2	10/370	All Speeds	7.5	3.8
1/3	10/370	Med-Hi Med-Lo:Lo	4.2	2.3
1/4	10/370	Med-Lo:Lo	3.2	1.9
1/5	10/370	Lo	2.6	1.5

Air Moving Motors

GE Commercial Motors by REGAL-BELOIT

Chameleon™ Multi-Horsepower Motors

Split Phase

Features
- Permanent split capacitor
- Automatic thermal overload protection
- Ball bearings
- Water slinger on shaft
- Different capacitor/speed combinations to fit various HP applications
- Class B insulation
- Designed for 370 Volt capacitor
- Holes in motor shell for mounting brackets
- Extended clampbolts or studs for mounting

Applications
Designed for condenser fan and heat pump units requiring vertical shaft up or vertical shaft down positioning with "belly band" or extended clamp screw mounting.

Condenser fan & heat pump

HP	RPM	Spds	Volts	Base	Rotation	FLA @ NP	C Dim.	Cat. No.	ServiceFirst Item #
1/3	1075	2	208-230	NB	CCW/CW	2.6	8.55	3465	MOT11727
	1075	1	208-230	NB	CCW/CW	2.8	11.30	3458	MOT11980
	825	2	208-230	NB	CCW/CW	1.9	10.55	3469	MOT11731
	825	1	208-230	NB	CCW/CW	2.4	12.06	3459	MOT12496
1/2	1075	2	208-230	NB	CCW/CW	3.0	10.55	3468	MOT11730

Capacitor/speed selection guide

MOT11727 - 1075 RPM - 1/3 HP

Motor HP	Speeds to Use	208V Capacitor	230V Capacitor	FLA
1/3	Hi	7.5/370	5/370	2.6
1/4	Hi	7.5/370	5/370	2.5
1/5	Lo	7.5/370	5/370	2.0
1/6	Lo	7.5/370	5/370	1.8

MOT11980 - 1075 RPM - 1/3 HP

Motor HP	Speeds to Use	208V Capacitor	230V Capacitor	FLA
1/3	Hi	7.5/370	7.5/370	2.8
1/4	Hi	7.5/370	7.5/370	2.8
1/5	Hi	7.5/370	7.5/370	2.8
1/6	Hi	7.5/370	7.5/370	2.8

MOT11731 - 825 RPM - 1/3 HP

Motor HP	Speeds to Use	208V Capacitor	230V Capacitor	FLA
1/3	Hi	10/370	7.5/370	1.9
1/4	Hi	10/370	7.5/370	1.5
1/5	Lo	10/370	7.5/370	1.2
1/6	Lo	10/370	7.5/370	1.0

MOT12496 - 825 RPM - 1/3 HP

Motor HP	Speeds to Use	208V Capacitor	230V Capacitor	FLA
1/3	Hi	12.5/370	12.5/370	2.4
1/4	Hi	12.5/370	12.5/370	2.4
1/5	Hi	12.5/370	12.5/370	2.4
1/6	Hi	12.5/370	12.5/370	2.4
1/8	Hi	12.5/370	12.5/370	2.4

MOT11730 - 1075 RPM - 1/2 HP

Motor HP	Speeds to Use	208V Capacitor	230V Capacitor	FLA
1/2	Hi	12.5/370	10/370	3.0
1/3	Hi	12.5/370	10/370	2.2
1/4	Lo	12.5/370	10/370	1.6
1/5	Lo	12.5/370	10/370	1.3

Air Moving Motors

GE Commercial Motors by REGAL-BELOIT

Condenser Fan & Heat Pump

Single Phase

Features
- Sleeve or ball bearings
- 26″ motor leads
- Water slinger on shaft
- 6″ shaft extension with 2 flats 90° apart
- Mounting holes in shell for capacitor bracket
- Designed for 370 Volt capacitor

Applications
Designed for condenser fan and heat pump units requiring vertical shaft up or vertical shaft down positioning with "belly band" or extended clamp crew mounting.

Permanent split capacitor - shaft up or down application

HP	RPM	Speeds	Volts	Base	Rotation	FLA @ NP	A Bearings	Cat. No.	ServiceFirst Item #
1/6	1075	1	208-230	NB	CCW/CW	1.0	Sleeve	3727	MOT10141
1/4	1075	1	208-230	NB	CCW/CW	1.8	Sleeve	3728	MOT07961
	1075	1	208-230	NB	CCW/CW	1.8	Ball	3732	MOT10133
	1075	1	460	NB	CCW/CW	0.9	Ball	3736	MOT10137
1/3	1075	1	208-230	NB	CCW/CW	2.3	Sleeve	3729	MOT07962
	1075	1	208-230	NB	CCW/CW	2.3	Ball	3733	MOT10134
	1075	1	460	NB	CCW/CW	1.3	Ball	3759	MOT10138
1/2	1075	1	208-230	NB	CCW/CW	3.5	Sleeve	3730	MOT07963
	1075	1	208-230	NB	CCW/CW	3.5	Ball	3734	MOT10135
	1075	1	460	NB	CCW/CW	1.7	Ball	3738	MOT10139
3/4	1075	1	208-230	NB	CCW/CW	4.7	Sleeve	3731	MOT07964
	1075	1	208-230	NB	CCW/CW	4.7	Ball	3735	MOT10136
	1075	1	460	NB	CCW/CW	2.0	Ball	3739	MOT10140

Tech Tip

On PSC motors, capacitor should always be replaced with the motor. Be sure to use the correct value for the replacement motor!

General Purpose, Three Phase

U.S. Motors

Open Dripproof EPACT Energy Efficient

Features:

- Fully comply with EPACT '92 and NRCan efficiency standards
- Suitable for wye-delta start on 250T frame and larger
- Dual voltage ratings suitable for part wind start on lower voltage
- Full 50 and 60 Hz operating data on nameplate (Yes 50 Hz)
- Voltage on 50 Hz is 190/380
- Class F insulation system, class B rise at service factor
- NEMA Design B performance (60Hz)
- 56-320T rolled steel frame construction
- 360T-404T cast iron frame construction
- 1.15 service factor on 60 Hz, 1.0 on 50 Hz

Typical 213T Frame, F1 construction

HP	Voltage	RPM	Frame	Efficiency Full Load	Power Factor Full Load	Shipping Weight	50HZ Capable	ServiceFirst Item # F1*	ServiceFirst Item # F2**
1	200	1800	143T	82.5	75.8	35		MOT10573	MOT10621
1	208-230/460	1800	143T	82.5	75.9	35	Yes	MOT10589	MOT10637
1	575	1800	143T	82.5	75.7	35		MOT10605	MOT10653
1-1/2	200	1800	145T	84.0	77.0	40		MOT10574	MOT10622
1-1/2	208-230/460	1800	145T	84.0	76.6	40	Yes	MOT10590	MOT10638
1-1/2	575	1800	145T	84.0	75.4	40		MOT10606	MOT10654
2	200	1800	145T	84.0	74.4	45		MOT10575	MOT10623
2	208-230/460	1800	145T	84.0	75.4	45	Yes	MOT10591	MOT10639
2	575	1800	145T	84.0	75.5	45		MOT10607	MOT10655
3	200	1800	182T	86.5	78.0	50		MOT10576	MOT10624
3	208-230/460	1800	182T	86.5	78.0	50	Yes	MOT10592	MOT10640
3	575	1800	182T	86.5	77.3	50		MOT10608	MOT10656
5	200	1800	184T	87.5	83.0	60		MOT10577	MOT10625
5	208-230/460	1800	184T	87.5	82.9	60	Yes	MOT10593	MOT10641
5	575	1800	184T	87.5	82.9	60		MOT10609	MOT10657
7-1/2	200	1800	213T	88.5	83.2	90		MOT10578	MOT10626
7-1/2	208-230/460	1800	213T	88.5	82.7	90	Yes	MOT10594	MOT10642
7-1/2	575	1800	213T	88.5	83.1	90		MOT10610	MOT10658
10	200	1800	215T	89.5	84.7	100		MOT10579	MOT10627
10	208-230/460	1800	215T	89.5	84.9	100	Yes	MOT10595	MOT10643
10	575	1800	215T	89.5	84.8	100		MOT10611	MOT10659
15	200	1800	254T	91.0	81.1	150		MOT10580	MOT10628
15	208-230/460	1800	254T	91.0	81.3	150	Yes	MOT10596	MOT10644
15	575	1800	254T	91.0	82.0	150		MOT10612	MOT10660
20	200	1800	256T	91.0	82.1	160		MOT10581	MOT10629
20	208-230/460	1800	256T	91.0	82.6	160	Yes	MOT10597	MOT10645
20	575	1800	256T	91.0	81.9	160		MOT10613	MOT10661
25	200	1800	284T	91.7	83.7	300		MOT10582	MOT10630
25	208-230/460	1800	284T	91.7	83.7	300	Yes	MOT10598	MOT10646
25	575	1800	284T	91.7	83.8	300		MOT10614	MOT10662
30	200	1800	286T	92.4	85.6	325		MOT10583	MOT10631
30	208-230/460	1800	286T	92.4	85.7	325	Yes	MOT10599	MOT10647
30	575	1800	286T	92.4	85.7	325		M0T10615	MOT10663
40	200	1800	324T	93.0	87.6	385		MOT10584	MOT10632
40	230/460	1800	324T	93.0	87.5	385	Yes	MOT10600	MOT10648
40	575	1800	324T	93.0	87.7	385		MOT10616	MOT10664
50	200	1800	326T	93.0	87.6	415		MOT10585	MOT10633
50	230/460	1800	326T	93.0	87.5	415	Yes	MOT10601	MOT10649
50	575	1800	326T	93.0	87.5	415		MOT10617	MOT10665
60	200	1800	364T	93.6	86.4	580		MOT10586	MOT10634
60	230/460	1800	364T	86.2	86.4	580	Yes	MOT10602	MOT10650
60	575	1800	364T	93.6	86.4	580		MOT10618	MOT10666
75	200	1800	365T	94.1	85.7	600		MOT10587	MOT10635
75	230/460	1800	365T	94.1	86.4	600	Yes	MOT10603	MOT10651
75	575	1800	365T	94.1	85.0	600		MOT10619	MOT10667
100	200	1800	404T	94.1	87.4	750		MOT10588	MOT10636
100	230/460	1800	404T	94.1	87.5	750	Yes	MOT10604	MOT10652
100	575	1800	404T	94.1	87.8	750		MOT10620	MOT10668

***F1 construction: Conduit Box on left hand side of motor when facing motor shaft.**
****F2 construction: Conduit Box on right hand side of motor when facing motor shaft.**

General Purpose, Three Phase

U.S. Motors

Open Dripproof Premium Efficient

Features:

- Exceeds EPACT '92 and NRCan efficiency standards
- Class F insulation system, class B rise at service factor
- NEMA Design B performance
- 56-320T rolled steel frame construction
- 360T-404T cast iron frame construction
- 1.15 service factor

Typical 213T Frame, F1 construction

HP	Voltage	RPM	Frame	Efficiency Full Load	Power Factor Full Load	Shipping Weight	ServiceFirst Item # F1*	ServiceFirst Item # F2**
1	200	1800	143T	85.5	72.0	35	MOT10669	MOT10717
1	230/460	1800	143T	85.5	73.0	35	MOT10685	MOT10733
1	575	1800	143T	84.0	69.0	35	MOT10701	MOT10749
1-1/2	200	1800	145T	86.5	73.5	40	MOT10670	MOT10718
1-1/2	230/460	1800	145T	86.5	70.6	40	MOT10686	MOT10734
1-1/2	575	1800	145T	86.5	70.6	40	MOT10702	MOT10750
2	200	1800	145T	86.5	77.0	45	MOT10671	MOT10719
2	230/460	1800	145T	86.5	74.7	45	MOT10687	MOT10735
2	575	1800	145T	86.5	74.7	45	MOT10703	MOT10751
3	200	1800	182T	89.5	80.0	50	MOT10672	MOT10720
3	230/460	1800	182T	90.2	78.9	50	MOT10688	MOT10736
3	575	1800	182T	90.2	79.6	50	MOT10704	MOT10752
5	200	1800	184T	89.5	81.0	60	MOT10673	MOT10721
5	230/460	1800	184T	89.5	81.0	60	MOT10689	MOT10737
5	575	1800	184T	89.5	81.2	60	MOT10705	MOT10753
7-1/2	200	1800	213T	91.7	84.2	90	MOT10674	MOT10722
7-1/2	230/460	1800	213T	91.7	82.3	90	MOT10690	MOT10738
7-1/2	575	1800	213T	91.0	85.6	90	MOT10706	MOT10754
10	200	1800	215T	91.7	83.5	100	MOT10675	MOT10723
10	230/460	1800	215T	91.0	82.8	100	MOT10691	MOT10739
10	575	1800	215T	91.0	84.3	100	MOT10707	MOT10755
15	200	1800	254T	93.0	81.6	150	MOT10676	MOT10724
15	230/460	1800	254T	93.0	81.6	150	MOT10692	MOT10740
15	575	1800	254T	92.4	82.2	150	MOT10708	MOT10756
20	200	1800	256T	93.6	83.0	160	MOT10677	MOT10725
20	230/460	1800	256T	93.6	82.7	160	MOT10693	MOT10741
20	575	1800	256T	93.0	84.0	160	MOT10709	MOT10757
25	200	1800	284T	94.1	86.0	300	MOT10678	MOT10726
25	230/460	1800	284T	85.3	85.2	300	MOT10694	MOT10742
25	575	1800	284T	94.1	86.1	300	MOT10710	MOT10758
30	200	1800	286T	94.1	94.1	85.3	MOT10679	MOT10727
30	230/460	1800	286T	94.1	94.1	86.2	MOT10695	MOT10743
30	575	1800	286T	86.2	94.1	85.3	M0T10711	MOT10759
40	200	1800	324T	94.5	86.2	385	MOT10680	MOT10728
40	230/460	1800	324T	94.5	86.2	385	MOT10696	MOT10744
40	575	1800	324T	94.5	85.7	385	MOT10712	MOT10760
50	200	1800	326T	94.5	87.2	415	MOT10681	MOT10729
50	230/460	1800	326T	94.5	87.2	415	MOT10697	MOT10745
50	575	1800	326T	94.5	86.2	415	MOT10713	MOT10761
60	200	1800	364T	95.0	85.6	580	MOT10682	MOT10730
60	230/460	1800	364T	94.5	85.8	580	MOT10698	MOT10746
60	575	1800	364T	95.0	85.9	580	MOT10714	MOT10762
75	200	1800	365T	95.0	85.7	600	MOT10683	MOT10731
75	230/460	1800	365T	95.0	86.0	600	MOT10699	MOT10747
75	575	1800	365T	95.0	85.7	600	MOT10715	MOT10763
100	200	1800	404T	94.1	85.6	750	MOT10684	MOT10636
100	230/460	1800	404T	95.4	87.4	750	MOT10700	MOT10748
100	575	1800	404T	95.4	87.4	750	MOT10716	MOT10764

***F1 construction: Conduit Box on left hand side of motor when facing motor shaft.**
****F2 construction: Conduit Box on right hand side of motor when facing motor shaft.**

General Purpose, Three Phase

U.S. Motors

Totally Enclosed Fan Cooled EPACT Energy Efficient

Features:

- Fully comply with EPACT '92 and NRCan efficiency standards
- Suitable for wye-delta start on 250T frame and larger
- Dual voltage ratings suitable for part wind start on lower voltage
- Full 50 and 60 Hz operating data on nameplate (Yes 50 Hz)
- Voltage on 50 Hz is 190/380
- Class F insulation system, class B rise at service factor
- NEMA design B performance (60Hz)
- 140T steel frame construction
- 180T-280T aluminum frame construction
- 320T-405T Cast iron frame construction
- 1.15 service factor @ 60 Hz, 1.0 @ 50 Hz

Typical 320T Frame, F1 Construction

HP	Voltage	RPM	Frame	Efficiency Full Load	Power Factor Full Load	Shipping Weight	50HZ Capable	ServiceFirst Item # F1*	ServiceFirst Item # F2**
1	200	1800	143T	82.5	76.2	65		MOT10765	MOT10813
1	208-230/460	1800	143T	82.5	76.2	65	Yes	MOT10781	MOT10829
1	575	1800	143T	82.5	76.1	65		MOT10797	MOT10845
1-1/2	200	1800	145T	84.0	77.4	70		MOT10766	MOT10814
1-1/2	208-230/460	1800	145T	84.0	77.0	70	Yes	MOT10782	MOT10830
1-1/2	575	1800	145T	84.0	75.7	70		MOT10798	MOT10846
2	200	1800	145T	84.0	74.9	70		MOT10767	MOT10815
2	208-230/460	1800	145T	84.0	75.8	70	Yes	MOT10783	MOT10831
2	575	1800	145T	84.0	75.9	70		MOT10799	MOT10847
3	200	1800	182T	87.5	79.4	100		MOT10768	MOT10816
3	208-230/460	1800	182T	87.5	79.3	100	Yes	MOT10784	MOT10832
3	575	1800	182T	87.5	78.7	100		MOT10800	MOT10848
5	200	1800	184T	87.5	83.6	110		MOT10769	MOT10817
5	208-230/460	1800	184T	87.5	83.6	110	Yes	MOT10785	MOT10833
5	575	1800	184T	87.5	83.5	110		MOT10801	MOT10849
7-1/2	200	1800	213T	89.5	82.8	160		MOT10770	MOT10818
7-1/2	208-230/460	1800	213T	89.5	82.9	160	Yes	MOT10786	MOT10834
7-1/2	575	1800	213T	89.5	83.4	160		MOT10802	MOT10850
10	200	1800	215T	89.5	83.9	175		MOT10771	MOT10819
10	208-230/460	1800	215T	89.5	83.7	175	Yes	MOT10787	MOT10835
10	575	1800	215T	89.5	83.7	175		MOT10803	MOT10851
15	200	1800	254T	91.0	83.3	300		MOT10772	MOT10820
15	208-230/460	1800	254T	91.0	83.5	300	Yes	MOT10788	MOT10836
15	575	1800	254T	91.0	83.9	300		MOT10804	MOT10852
20	200	1800	256T	91.0	84.2	360		MOT10773	MOT10821
20	208-230/460	1800	256T	91.0	83.8	360	Yes	MOT10789	MOT10837
20	575	1800	256T	91.0	83.7	360		MOT10805	MOT10853
25	200	1800	284T	92.4	85.0	390		MOT10774	MOT10822
25	208-230/460	1800	284T	92.4	84.8	390	Yes	MOT10790	MOT10838
25	575	1800	284T	92.4	85.8	390		MOT10806	MOT10854
30	200	1800	286T	92.4	85.4	440		MOT10775	MOT10823
30	230/460	1800	286T	92.4	85.2	440	Yes	MOT10791	MOT10839
30	575	1800	286T	92.4	84.8	440		M0T10807	MOT10855
40	200	1800	324T	93.0	87.7	600		MOT10776	MOT10824
40	230/460	1800	324T	93.0	87.6	600	Yes	MOT10792	MOT10840
40	575	1800	324T	93.0	87.6	600		MOT10808	MOT10856
50	200	1800	326T	93.0	88.2	610		MOT10777	MOT10825
50	230/460	1800	326T	93.0	88.2	610	Yes	MOT10793	MOT10841
50	575	1800	326T	93.0	88.2	610		MOT10809	MOT10857
60	200	1800	364T	93.6	85.8	825		MOT10778	MOT10826
60	230/460	1800	364T	93.6	85.7	825	Yes	MOT10794	MOT10842
60	575	1800	364T	93.6	86.2	825		MOT10810	MOT10858
75	200	1800	365T	94.1	85.4	910		MOT10779	MOT10827
75	230/460	1800	365T	94.1	87.2	910	Yes	MOT10795	MOT10843
75	575	1800	365T	94.1	86.3	910		MOT10811	MOT11859
100	200	1800	405T	94.5	85.5	1250		MOT10780	MOT10828
100	230/460	1800	405T	94.5	87.4	1250	Yes	MOT10796	MOT10844
100	575	1800	405T	94.5	85.3	1250		MOT10812	MOT10860

***F1 construction: Conduit Box on left hand side of motor when facing motor shaft.**
****F2 construction: Conduit Box on right hand side of motor when facing motor shaft.**

General Purpose, Three Phase

U.S. Motors

Totally Enclosed Fan Cooled Premium Efficient

Features:

- Exceeds EPACT '92 and NRCan efficiency standards
- Class F insulation system, class B rise at service factor
- NEMA Design B performance (60Hz)
- 140T steel frame construction
- 180T-280T aluminum frame construction
- 320T-405T cast iron frame construction
- 1.15 service factor

Typical 320T Frame, F1 Construction

HP	Voltage	RPM	Frame	Efficiency Full Load	Power Factor Full Load	Shipping Weight	ServiceFirst Item # F1*	ServiceFirst Item # F2**
1	200	1800	143T	86.5	78.0	45	MOT10861	MOT10909
1	230/460	1800	143T	86.5	78.0	45	MOT10877	MOT10925
1	575	1800	143T	86.5	78.7	45	MOT10893	MOT10941
1-1/2	200	1800	145T	86.5	77.3	47	MOT10862	MOT10910
1-1/2	230/460	1800	145T	86.5	77.3	47	MOT10878	MOT10926
1-1/2	575	1800	145T	86.5	77.6	47	MOT10894	MOT10942
2	200	1800	145T	86.5	78.6	50	MOT10863	MOT10911
2	230/460	1800	145T	86.5	79.0	50	MOT10879	MOT10927
2	575	1800	145T	86.5	78.6	50	MOT10895	MOT10943
3	200	1800	182T	89.5	79.0	85	MOT10864	MOT10912
3	230/460	1800	182T	89.5	79.0	85	MOT10880	MOT10928
3	575	1800	182T	88.5	80.0	85	MOT10896	MOT10944
5	200	1800	184T	90.2	83.4	100	MOT10865	MOT10913
5	230/460	1800	184T	90.2	83.4	100	MOT10881	MOT10929
5	575	1800	184T	90.2	83.0	100	MOT10897	MOT10945
7-1/2	200	1800	213T	91.7	84.5	150	MOT10866	MOT10914
7-1/2	230/460	1800	213T	91.7	84.5	150	MOT10882	MOT10930
7-1/2	575	1800	213T	91.0	85.0	150	MOT10898	MOT10946
10	200	1800	215T	91.7	86.5	190	MOT10867	MOT10915
10	230/460	1800	215T	91.7	86.5	190	MOT10883	MOT10931
10	575	1800	215T	91.7	86.5	190	MOT10899	MOT10947
15	200	1800	254T	93.0	82.5	300	MOT10868	MOT10916
15	230/460	1800	254T	93.0	82.5	300	MOT10884	MOT10932
15	575	1800	254T	93.0	83.0	300	MOT10900	MOT10948
20	200	1800	256T	93.6	85.0	310	MOT10869	MOT10917
20	230/460	1800	256T	93.6	85.0	310	MOT10885	MOT10933
20	575	1800	256T	93.6	85.0	310	MOT10901	MOT10949
25	200	1800	284T	93.6	85.0	355	MOT10870	MOT10918
25	230/460	1800	284T	93.6	85.5	355	MOT10886	MOT10934
25	575	1800	284T	93.6	86.0	355	MOT10902	MOT10950
30	200	1800	286T	94.1	86.5	400	MOT10871	MOT10919
30	230/460	1800	286T	94.1	86.5	400	MOT10887	MOT10935
30	575	1800	286T	94.1	87.0	400	M0T10903	MOT10951
40	200	1800	324T	94.1	86.5	550	MOT10872	MOT10920
40	230/460	1800	324T	94.1	86.5	550	MOT10888	MOT10936
40	575	1800	324T	94.1	86.5	550	MOT10904	MOT10952
50	200	1800	326T	94.5	88.3	625	MOT10873	MOT10921
50	230/460	1800	326T	94.1	88.3	625	MOT10889	MOT10937
50	575	1800	326T	94.1	88.3	625	MOT10905	MOT10953
60	200	1800	364T	95.0	84.0	825	MOT10874	MOT10922
60	230/460	1800	364T	95.0	84.0	825	MOT10890	MOT10938
60	575	1800	364T	95.0	85.5	825	MOT10906	MOT10954
75	200	1800	365T	95.4	85.7	890	MOT10875	MOT10923
75	230/460	1800	365T	95.4	87.5	890	MOT10891	MOT10939
75	575	1800	365T	95.4	87.5	890	MOT10907	MOT10955
100	200	1800	405T	95.4	84.0	1200	MOT10876	MOT10924
100	230/460	1800	405T	95.4	85.4	1200	MOT10892	MOT10940
100	575	1800	405T	95.4	85.4	1200	MOT10908	MOT10956

***F1 construction: Conduit Box on left hand side of motor when facing motor shaft.**
****F2 construction: Conduit Box on right hand side of motor when facing motor shaft.**

Cooling Tower Duty Motor

U.S. Motors
New Cooling Tower Duty Motor
A Premium Plus Product

- Cast Iron Construction (140 frame rolled steel)
- Inverter Grade Wire
- 100% Solids Polyster Varnish (Double Dip)
- Double Sealed Ball Bearings
- Exxon Polyrex EM Grease
- Heavy Gasketed Conduit Box and Cover
- Sealed Bracket-to-Frame Registers and Lead Openings
- Forsheda V-Ring
- Umbrella-Type Seal for Shaft-up Mounting
- Condensation Drains for Multi-Postition Mount

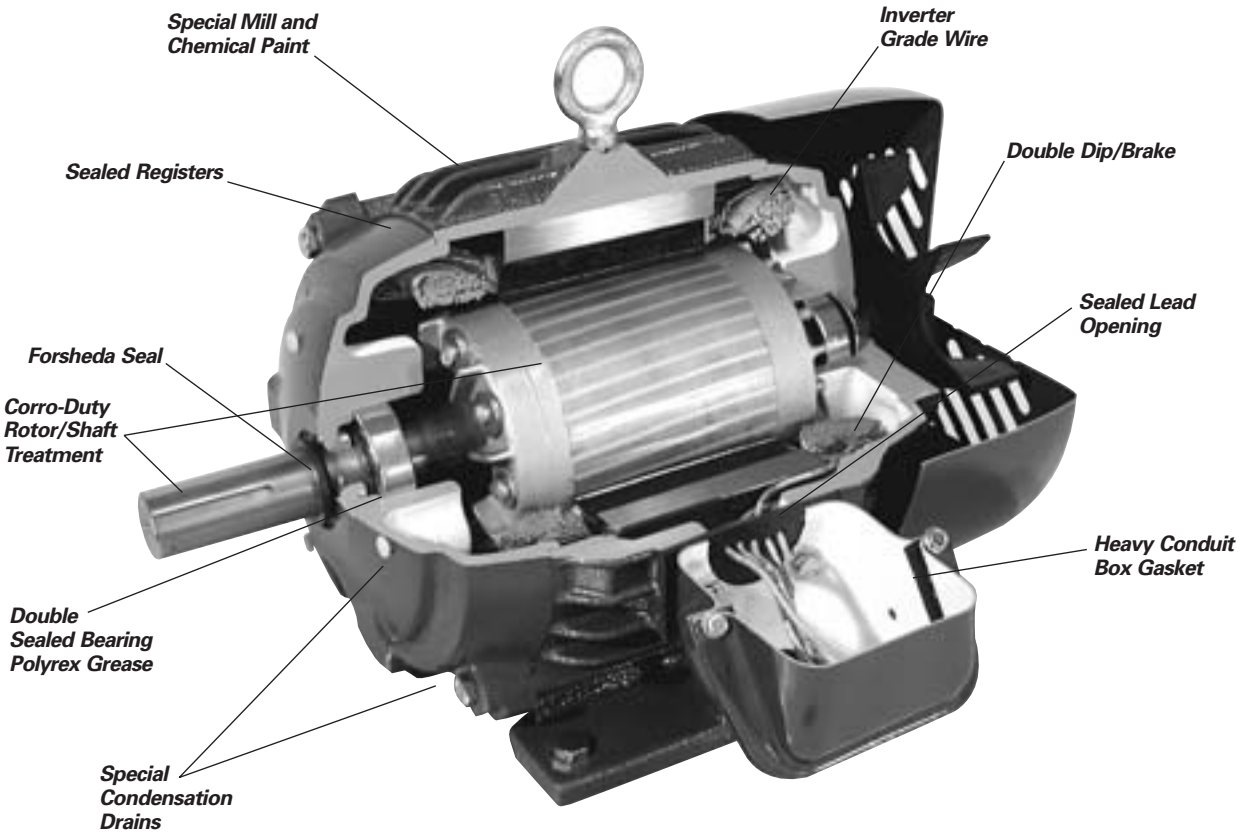

Special Application Three Phase

U.S. Motors

TEFC, Cooling Tower Duty Energy Efficient, 2-speed, 1- and 2-winding

Features:

- Pulse Endurance "Tough Coat" Inverter Grade® Wire
- NEMA Design B performance (4)
- Class F insulation, 1.15 Service Factor @ 60Hz
- 40°C ambient continuous duty
- Exxon Polyrex EM® grease
- Double Dip and Bake 100% Solids Insulation on Windings
- Double sealed bearings
- Cast iron end-shields
- Corrosion resistant mill and chemical duty paint
  - Corro-Duty Treatment on Rotor and Shaft
- Forsheda V-Ring on pulley end for IP 54 protection
- External Umbrella-Type Seal for W-8 (Shaft Up) Mount
- Stainless steel nameplate and zinc plated hardware
- Cast iron frame construction 180T frame and larger, steel frame construction 140T frame
- Designed for Horizontal or Vertical (Shaft Up) Mounting
  - Condensation drains with plastic plugs
  - Horizontal Lifting Provisions on 180T frame and larger
  - Vertical Lifting Lugs Available with Conversion
- Suitable for Direct-Connected or Belted Loads (per NEMA specifications and tolerances)
- Heavy Gasketed Conduit Box, F-2 Position Standard

Typical 184T Frame

  - Convertible to F-1 Position as USEM Conversion
- Sealed Bracket-to-Frame Registers and Leads
  - Lead-positioning Gasket with Sealant 140T-250T frame
  - Potted Leads 280T frame and larger
- Additional Options Available (See "Conversions - Modifications - Accessories" Section)

HP (High)	HP (Low)	Volts	RPM	Number of Windings	Efficiency Full Load	Power Factor Full Load	Shipping Weight	Frame	ServiceFirst Item #
2	0.5	200	1800/900	1	82.5	76.4	70	145T	MOT11274
3	0.75	200	1800/900	1	83.5	78.3	100	182T	MOT11275
3	0.75	460	1800/900	1	82.5	78.9	100	182T	MOT11276
5	1.25	200	1800/900	1	84.0	82.9	110	184T	MOT11277
5	1.25	200	1800/900	2	88.5	79.7	175	215T	MOT11278
5	1.25	460	1800/900	1	84.0	84.0	110	184T	MOT11279
5	1.25	460	1800/900	2	88.5	79.7	175	215T	MOT11280
5	1.25	575	1800/900	1	84.0	83.8	110	184T	MOT11281
5	1.25	460	1200/600	1	85.5	64.6	300	254T	MOT11282
7.5	1.875	200	1800/900	1	85.5	83.7	160	213T	MOT11283
7.5	1.875	200	1800/900	2	88.5	77.8	300	254T	MOT11284
7.5	1.875	460	1800/900	2	88.5	77.8	300	254T	MOT11285
7.5	1.875	460	1800/900	1	85.5	83.7	160	213T	MOT11286
7.5	1.875	575	1800/900	1	85.5	83.7	160	213T	MOT11287
7.5	1.875	460	1200/600	1	85.5	75.6	340	256T	MOT11288
10	2.5	200	1800/900	2	89.5	82.4	360	256T	MOT11289
10	2.5	200	1800/900	1	215T	86.5	83.6	175	MOT11290
10	2.5	460	1800/900	2	256T	91.0	81.6	360	MOT11291
10	2.5	460	1800/900	1	86.5	82.7	175	215T	MOT11292
10	2.5	575	1800/900	2	89.5	76.4	360	256T	MOT11293
10	2.5	575	1800/900	1	86.5	82.9	175	215T	MOT11294
10	2.5	460	1200/600	1	87.5	74.3	380	284T	MOT11295
15	3.75	200	1800/900	2	90.2	83.8	390	284T	MOT11296
15	3.75	200	1800/900	1	89.5	81.1	300	254T	MOT11297
15	3.75	460	1800/900	2	90.2	83.8	390	284T	MOT11298
15	3.75	460	1800/900	1	89.5	81.1	300	254T	MOT11205
15	3.75	575	1800/900	1	89.5	81.1	300	254T	MOT11299
15	3.75	575	1800/900	2	90.2	83.8	390	284T	MOT11300
15	3.75	460	1200/600	1	88.5	75.4	410	286T	MOT11301
20	5	200	1800/900	2	91.0	79.9	440	286T	MOT11302
20	5	200	1800/900	1	90.2	79.4	360	256T	MOT11303
20	5	460	1800/900	2	91.0	79.9	440	286T	MOT11304
20	5	460	1800/900	1	90.2	79.4	360	256T	MOT11305
20	5	575	1800/900	1	90.2	79.4	360	256T	MOT11306
20	5	575	1800/900	2	91.0	79.9	440	286T	MOT11307
20	5	460	1200/600	1	88.5	77.8	600	324T	MOT11309

Special Application Three Phase

U.S. Motors

HP (High)	HP (Low)	Volts	RPM	Number of Windings	Efficiency Full Load	Power Factor Full Load	Shipping Weight	Frame	ServiceFirst Item #
25	6.25	200	1800/900	1	91.0	83.9	440	286T	MOT11310
25	6.25	200	1800/900	2	91.7	82.4	600	324T	MOT11311
25	6.25	460	1800/900	1	91.0	83.9	440	286T	MOT11215
25	6.25	460	1800/900	2	91.7	82.4	600	324T	MOT11312
25	6.25	575	1800/900	1	91.0	83.9	440	286T	MOT11313
25	6.25	575	1800/900	2	91.7	82.4	600	324T	MOT11314
25	6.25	460	1200/600	1	89.5	70.8	675	326T	MOT11315
30	7.5	200	1800/900	1	91.7	87.3	600	324T	MOT11316
30	7.5	200	1800/900	2	92.4	83.3	610	326T	MOT11317
30	7.5	460	1800/900	2	92.4	83.3	610	326T	MOT11318
30	7.5	460	1800/900	1	91.7	87.3	600	324T	MOT11319
30	7.5	575	1800/900	1	91.7	87.3	600	324T	MOT11320
30	7.5	460	1200/600	1	90.2	74.6	875	364T	MOT11321
40	10	200	1800/900	1	91.7	87.3	610	326T	MOT11322
40	10	460	1800/900	1	91.7	87.4	610	326T	MOT11323
40	10	460	1800/900	2	92.4	79.0	810	364T	MOT11324
40	10	575	1800/900	2	92.4	79.0	810	364T	MOT11325
40	10	575	1800/900	1	91.7	87.4	610	326T	MOT11326
40	10	460	1200/600	1	91.0	76.5	900	365T	MOT11327
50	12.5	200	1800/900	2	92.4	85.1	925	365T	MOT11328
50	12.5	200	1800/900	1	91.7	85.8	825	364T	MOT11329
50	12.5	460	1800/900	1	92.4	80.8	810	364T	MOT11330
50	12.5	460	1800/900	2	92.8	80.0	925	365T	MOT11331
50	12.5	575	1800/900	1	91.7	85.9	825	364T	MOT11332
60	15	200	1800/900	1	93.0	85.1	910	365T	MOT11333
60	15	460	1800/900	1	93.0	84.8	925	365T	MOT11334
60	15	575	1800/900	1	93.0	84.8	910	365T	MOT11335
75	18.75	200	1800/900	1	93.0	83.3	1250	405T	MOT11336
75	18.75	460	1800/900	1	93.0	83.3	1260	405T	MOT11337

Special Application Three Phase

U.S. Motors

TEAO, Cooling Tower Duty Energy Efficient, 2-speed, 1- and 2-winding

Features:

- Pulse Endurance "Tough Coat" Inverter Grade® Wire
- NEMA Design B performance
  - ***See Min. Air Velocity Chart This Section***
- Class F insulation, 1.15 Service Factor @ 60Hz
- 40°C ambient continuous duty
- Exxon Polyrex EM® grease
- Double Dip and Bake 100% Solids Insulation on Windings
- Double sealed bearings
- Cast iron end-shields
- Corrosion resistant mill and chemical duty paint
  - Corro-Duty Treatment on Rotor and Shaft
- Forsheda V-Ring on pulley end for IP 54 protection
- External Umbrella-Type Seal for W-8/W-5 Mount
- Stainless steel nameplate and zinc plated hardware
- Exxon Polyrex EM® grease
- Cast iron frame construction 180T frame and larger, steel frame construction 140T frame
- Designed for Horizontal or Vertical (Shaft Up or Down) Mounting
  - Condensation drains with plastic plugs
  - Horizontal and Vertical Lifting Provisions on 180T frame and larger
- Suitable for Direct-Connected or Belted Loads (per NEMA specifications and tolerances)

Typical 184T Frame

- Heavy Gasketed Conduit Box, F-1 Position Standard
  - Convertible to F-2 Position as USEM Conversion
- Sealed Bracket-to-Frame Registers and Leads
  - Lead-positioning Gasket with Sealant 140T-250T frame
  - Potted Leads 280T frame and larger
- Additional Options Available (See "Conversions - Modifications - Accessories" Section)

HP (High)	HP (Low)	Volts	RPM	Number of Windings	Efficiency Full Load	Power Factor Full Load	Shipping Weight	Frame	ServiceFirst Item #
2	0.5	460	1800/900	1	82.5	76.4	70	145T	MOT11338
2	0.5	575	1800/900	1	82.5	76.4	70	145T	MOT11339
2	0.5	460	1200/600	2	82.8	77.9	175	215T	MOT11340
3	0.75	200	1800/900	1	82.5	79.4	100	182T	MOT11341
3	0.75	460	1800/900	1	82.5	78.9	100	182T	MOT11342
3	0.75	575	1800/900	1	82.5	79.9	100	182T	MOT11343
3	0.75	460	1200/600	1	82.5	78.2	175	215T	MOT11344
5	1.25	200	1800/900	2	88.5	79.7	175	215T	MOT11345
5	1.25	200	1800/900	1	84.0	82.9	110	184T	MOT11346
5	1.25	460	1800/900	2	88.5	79.7	175	215T	MOT11347
5	1.25	460	1800/900	1	84.0	84.0	110	184T	MOT11348
5	1.25	200	1200/600	1	86.5	76.7	300	254T	MOT11349
5	1.25	460	1200/600	1	85.5	64.6	300	254T	MOT11350
7.5	1.875	200	1800/900	2	88.5	77.8	300	254T	MOT11351
7.5	1.875	200	1800/900	1	85.5	83.0	160	213T	MOT11352
7.5	1.875	460	1800/900	2	88.5	77.8	300	254T	MOT11353
7.5	1.875	460	1800/900	1	85.5	83.7	160	213T	MOT11354
7.5	1.875	575	1800/900	1	85.5	83.1	160	213T	MOT11355
7.5	1.875	460	1200/600	1	85.5	63.0	340	256T	MOT11356
7.5	1.875	460	1200/600	2	84.0	76.5	390	284T	MOT11357
10	2.5	200	1800/900	2	89.5	82.4	360	256T	MOT11358
10	2.5	200	1800/900	1	86.5	83.6	175	215T	MOT11359
10	2.5	460	1800/900	2	89.5	82.4	360	256T	MOT11360
10	2.5	460	1800/900	1	86.5	82.7	175	215T	MOT11361
10	2.5	575	1800/900	1	87.5	84.1	175	215T	MOT11362
10	2.5	200	1200/600	1	87.5	76.8	380	284T	MOT11363
10	2.5	460	1200/600	2	84.0	78.5	440	286T	MOT11364
10	2.5	460	1200/600	1	87.5	76.8	380	284T	MOT11365
15	3.75	200	1800/900	2	90.2	83.8	390	284T	MOT11366
15	3.75	200	1800/900	1	89.5	81.1	300	254T	MOT11372
15	3.75	460	1800/900	2	90.2	83.8	390	284T	MOT11373
15	3.75	460	1800/900	1	89.5	81.1	300	254T	MOT11374
15	3.75	575	1800/900	2	90.2	83.8	390	284T	MOT11375
15	3.75	575	1800/900	1	89.5	81.1	300	254T	MOT11376
15	3.75	200	1200/600	1	88.5	80.1	410286T	MOT11377	

Special Application Three Phase

U.S. Motors

HP (High)	HP (Low)	Volts	RPM	Number of Windings	Efficiency Full Load	Power Factor Full Load	Shipping Weight	Frame	ServiceFirst Item #
15	3.75	460	1200/600	1	88.5	80.1	410	286T	MOT11378
15	3.75	460	1200/600	2	86.5	77.4	600	324T	MOT11379
20	5	200	1800/900	1	90.2	79.4	360	256T	MOT11231
20	5	200	1800/900	2	91.0	79.9	440	286T	MOT11380
20	5	460	1800/900	2	91.0	79.9	440	286T	MOT11381
20	5	460	1800/900	1	90.2	79.4	360	256T	MOT11382
20	5	575	1800/900	2	91.0	79.9	440	286T	MOT11383
20	5	575	1800/900	1	90.2	79.4	360	256T	MOT11384
20	5	200	1200/600	1	88.5	82.3	600	324T	MOT11385
20	5	460	1200/600	2	87.5	78.7	610	326T	MOT11386
20	5	460	1200/600	1	88.5	82.3	600	324T	MOT11387
25	6.25	200	1800/900	2	91.7	82.4	600	324T	MOT11388
25	6.25	200	1800/900	1	91.0	83.9	440	286T	MOT11389
25	6.25	460	1800/900	2	91.7	82.4	600	324T	MOT11390
25	6.25	460	1800/900	1	91.0	83.9	440	286T	MOT11391
25	6.25	575	1800/900	1	91.0	84.0	440	286T	MOT11392
25	6.25	575	1800/900	2	91.7	82.4	600	324T	MOT11393
25	6.25	200	1200/600	1	89.5	70.8	675	326T	MOT11394
25	6.25	460	1200/600	2	88.5	76.4	810	364T	MOT11395
25	6.25	460	1200/600	1	89.5	70.8	675	326T	MOT11396
30	7.5	200	1800/900	1	91.7	87.4	600	324T	MOT11397
30	7.5	200	1800/900	2	92.4	83.3	610	326T	MOT11398
30	7.5	460	1800/900	2	92.4	83.3	610	326T	MOT11399
30	7.5	460	1800/900	1	91.7	87.4	600	324T	MOT11400
30	7.5	575	1800/900	1	91.7	87.4	600	324T	MOT11401
30	7.5	200	1200/600	1	90.2	75.6	875	364T	MOT11402
30	7.5	460	1200/600	1	90.2	75.6	875	364T	MOT11403
40	10	200	1800/900	1	91.7	87.3	610	326T	MOT11411
40	10	200	1800/900	2	92.4	79.0	810	364T	MOT11404
40	10	460	1800/900	2	92.4	79.0	810	364T	MOT11405
40	10	460	1800/900	1	91.7	87.3	610	326T	MOT11406
40	10	575	1800/900	1	91.7	87.3	610	326T	MOT11415
40	10	575	1800/900	2	92.4	79.0	610	326T	MOT11407
40	10	200	1200/600	1	91.0	73.4	900	365T	MOT11408
40	10	460	1200/600	2	90.2	73.7	1050	404T	MOT11409
40	10	460	1200/600	1	91.0	73.4	900	365T	MOT11410
50	12.5	200	1800/900	2	92.4	85.1	910	365T	MOT11412
50	12.5	200	1800/900	1	92.4	85.8	825	364T	MOT11414
50	12.5	460	1800/900	1	92.4	80.8	810	364T	MOT11416
50	12.5	460	1800/900	2	92.4	85.1	925	365T	MOT11413
50	12.5	575	1800/900	1	92.4	85.9	825	364T	MOT11417
50	12.5	200	1200/600	1	91.7	74.8	1050	404T	MOT11418
50	12.5	460	1200/600	1	91.7	74.8	1050	404T	MOT11419
60	15	200	1800/900	1	93.0	85.2	910	365T	MOT11420
60	15	460	1800/900	1	93.0	84.8	925	365T	MOT11421
60	15	575	1800/900	1	93.0	84.8	910	365T	MOT11422
75	18.75	200	1800/900	2	93.0	84.1	1660	405T	MOT11423
75	18.75	200	1800/900	1	93.6	85.7	1250	405T	MOT11424
75	18.75	460	1800/900	1	93.0	83.3	1260	405T	MOT11425
75	18.75	460	1800/900	2	93.0	84.1	1660	405T	MOT11426
100	25	200	1800/900	1	93.0	84.8	1675	444T	MOT11427
100	25	460	1800/900	1	93.0	84.8	1675	444T	MOT11428

Commercial Duty Pump

U.S. Motors

Single Phase, C-Face Mount Open Dripproof

- Double Sealed Ball Bearings-Locked Drive End Bearing
- Continuous Duty
- 50/60 Hz models have 1.0 S.F. on 50 Hz
- 40 Degrees C Ambient
- NEMA "C" Flange Mounting
- Shaft Threads for 56J Mount: 7/16-20 UNC-2A
- Automatic Thermal Overload Protection
- Removable Base

HP	RPM	Frame	Volts	Hertz	SF	Length	ServiceFirst Item #
1/3	3450/2850	56J	115/208-230	60/50	1.75	11.37	MOT11887
1/2	3450/2850	56J	115/208-230	60/50	1.6	11.62	MOT11888
3/4	3450/2850	56J	115/208-230	60/50	1.5	12.12	MOT11889
1.0	3450/2850	56J	115/208-230	60/50	1.4	12.37	MOT11890
1.5	3450/2850	56J	115/208-230	60/50	1.3	12.87	MOT11891
2.0	3450/2850	56J	115/208-230	60/50	1.2	12.87	MOT11892
3.0	3450	56J	208-230	60	1.15	13.37	MOT11893

Single Phase, C-Face Mount Totally Enclosed

- Totally Enclosed, 50 Hz Motors supplied with CE Markings
- Double Sealed Ball Bearings-Locked Drive End Bearing
- Continuous Duty
- 50/60 Hz models have 1.0 S.F. on 50 Hz
- 40 Degrees C Ambient
- NEMA "C" Flange Mounting
- Shaft Threads for 56J Mount: 7/16-20 UNC-2A
- Automatic Thermal Overload Protection
- Removable Base

HP	RPM	Frame	Volts	Hertz	SF	Length	ServiceFirst Item #
1/2	3450/2850	56J	115/208-230	60/50	1.15	11.85	MOT11894
3/4	3450/2850	56J	115/208-230	60/50	1.15	12.35	MOT11895
1.0	3450/2850	56J	115/208-230	60/50	1.15	12.60	MOT11896
1.5	3450/2850	56J	115/208-230	60/50	1.15	13.10	MOT11897

Commercial Duty Pump

U.S. Motors

Three Phase, C-Face Mount Open Dripproof

- Double Sealed Ball Bearings-Locked Drive End Bearing
- Continuous Duty
- 50/60 Hz models have 1.0 S.F. on 50 Hz
- 40 Degrees C Ambient
- NEMA "C" Flange Mounting
- Shaft Threads for 56J Mount: 7/16-20 UNC-2A

HP	RPM	Frame	Volts	Hertz	SF	Length	ServiceFirst Item #
1/2	3450/2850	56J	208-230/460	60/50	1.6	11.34	MOT11878
3/4	3450/2850	56J	208-230/460	60/50	1.5	11.84	MOT11877
1.0	3450/2850	56J	208-230/460	60/50	1.4	12.09	MOT11878
1.5	3450/2850	56J	2208-230/460	60/50	1.3	11.87	MOT11879
2.0	3450/2850	56J	208-230/460	60/50	1.2	12.38	MOT11880
3.0	3450	56J	208-230/460	60	1.15	13.38	MOT11881

Three Phase, C-Face Mount Totally Enclosed

- Totally Enclosed, 50 Hz Motors supplied with CE Markings
- Double Sealed Ball Bearings-Locked Drive End Bearing
- Continuous Duty
- 50/60 Hz models have 1.0 S.F. on 50 Hz
- 40 Degrees C Ambient
- NEMA "C" Flange Mounting
- Shaft Threads for 56J Mount: 7/16-20 UNC-2A

HP	RPM	Frame	Volts	Hertz	SF	Length	ServiceFirst Item #
1/2	3450/2850	56J	208230/460	60/50	1.15	11.60	MOT11882
3/4	3450/2850	56J	208230/460	60/50	1.15	11.60	MOT11883
1.0	3450/2850	56J	208230/460	60/50	1.15	11.60	MOT11884
1.5	3450/2850	56J	208230/460	60/50	1.15	11.85	MOT11885
2.0	3450/2850	56J	208230/460	60/50	1.15	12.35	MOT11886

Special Application Close Coupled Pump

U.S. Motors

Motor Three Phase Open Dripproof Standard Efficient

- Class F Insulation, Class B Rise At Full Load
- Rolled Steel Frame 140-320, Cast Iron Frame 360-440
- Aluminum End Shields 140-250, Cast iron End Shields 280-440
- Oversize Ball Bearings w/Locked shaft End Construction
- Removable Base 180 Frame & Up

HP	RPM	Frame	Volts	Hertz	SF	Efficiency Full Load	Power Factor Full Load	Shipping Weight	ServiceFirst Item #
2	1800	145JM	208-230/460	60	1.15	80.0	74.5	40	MOT11898
3	3600	145JM	208-230/460	60	1.15	84.0	89.2	30	MOT11899
3	1800	182JM	208-230/460	60	1.15	78.5	77.4	55	MOT11900
5	3600	182JM	208-230/460	60	1.15	84.0	83.2	60	MOT11901
5	1800	184JM	208-230/460	60	1.15	81.5	77.7	64	MOT11902
7-1/2	3600	184JM	208-230/460	60	1.15	85.5	85.6	77	MOT11903
7-1/2	1800	213JM	208-230/460	60	1.15	84.0	86.2	100	MOT11904
10	3600	213JM	208-230/460	60	1.15	87.5	83.2	105	MOT11905
10	1800	215JM	208-230/460	60	1.15	84.0	81.3	100	MOT11908

Motor Three Phase TEFC Standard Efficient

- Class F Insulation, Class B Rise At Full Load
- Extruded Aluminum Frame (140: Rolled Steel Construction)
- Aluminum End Shields With Steel Bearing Inserts
- 40C Ambient, NEMA Design B Performance
- F1 assembly Position

HP	RPM	Frame	Volts	Hertz	SF	Efficiency Full Load	Power Factor Full Load	Shipping Weight	ServiceFirst Item #
2	1800	145JM	208-230/460	60	1.25	82.50	74.10	37	MOT11907
3	3600	182JM	208-230/460	60	1.25	80.00	83.30	53	MOT11908
3	1800	182JM	208-230/460	60	1.25	84.00	80.20	68	MOT11909
5	3600	184JM	208-230/460	60	1.25	85.50	85.60	69	MOT11910
5	1800	184JM	208-230/460	60	1.25	84.00	81.70	66	MOT11911
7-1/2	3600	184JM	230/460	60	1.15	84.00	86.50	75	MOT11912
7-1/2	3600	213JM	208-230/460	60	1.25	86.50	83.70	102	MOT11913
7-1/2	1800	213JM	208-230/460	60	1.25	85.50	78.90	110	MOT11914
10	3600	215JM	208-230/460	60	1.25	88.50	87.40	123	MOT11915

Heavy Duty Motor Starters

SIEMENS
Solid State Overload, Manual Reset Class 14

Ordering Instructions
- See Field Modification Kits
- See 380V, 50 HZ information
- See Dimensions
- See Wiring Diagrams

Coil Table

60 HZ Voltage	Letter
110-120/220-240[1]	A
120	F

For other voltages and frequencies, coil may be purchased separately.

3 Phase, 3 Pole

Max Hp					Overload		
200 Volts	230 Volts	460 Volts	575 Volts	NEMA Size	Amp Range	Mfg. #	ServiceFirst Item #
1/6	1/6	1/3	1/2	0	0.25–1	14CSA32AA	OLD00343
1/2	3/4	1 1/2	2	0	0.75–3	14CSB32AA	OLD00344
2	2	5	5	0	2.5–10	14CSD32AA	OLD00345
3	3	—	—	0	9–18	14CSE32AA	OLD00346
1/6	1/6	1/3	1/2	1	0.25–1	14DSA32AA	OLD00347
1/2	3/4	1 1/2	2	1	0.75–3	14DSB32AA	OLD00348
2	2	5	5	1	2.5–10	14DSD32AA	OLD00349
3	3	10	10	1	9–18	14DSE32AA	OLD00350
7 1/2	7 1/2	—	—	1	13–27	14DSF32AA	OLD00351
—	—	15	15	1 3/4	13-27	14ESF32AA	OLD00359
10	10	—	—	1 3/4	20-40	14ESG32AA	OLD00360
—	—	15	20	2	13–27	14FSF32AA	OLD00352
10	15	25	25	2	22–45	14FSH32AA	OLD00353
—	—	30	30	2 1/2	22-45	14GSH32AA	OLD00361
15	20	—	—	2 1/2	30-60	14GSJ32A*	OLD00362
—	—	30	40	3	30–60	14HSJ32AA	OLD00354
25	30	50	50	3	45–90	14HSK32AA	OLD00355
30	40	75	75	3 1/2	57-115	14ISL22AA	OLD00363
40	50	100	100	4	67–135	14JTM32AA	OLD00356
75	100	200	200	5	100–270	14LTU32AA	OLD00357
150	200	400	400	6	200–540	14MTX32AA	OLD00358

For a complete line of contactors, starters, overloads and relays, please see your ServiceFirst Siemens-Furnas Controls Catalog.

The Nameplate tells the story

Model or Catalog Number
- One of the most important items on the nameplate of a motor that needs to be replaced.

Rated Volts
The most frequently occurring domestic voltages are 230 and 460. In Canada 575 volts is common.

Standard induction motors are designed to tolerate voltage variations plus or minus 10%. A motor with a nameplate voltage rating of 230 could be expected to give satisfactory performance when supplied with power ranging from a low value of 207 to a high extreme of 253 volts.

Rated Frequency and Number of Phases
This indicates the frequency for which the motor is designed in Hertz (cycles per second). 60 Hz power is utilized throughout the United States, Canada and most of Latin America. 60 Hertz is also used in a few foreign countries; however, 50 Hertz is dominant elsewhere. If motor is used in U.S., you don't need a 50/60 Hz rating. A 3 phase motor can't be used on single phase.

Rated Full Load Speed
The speed at which the motor will run under full torque conditions when applied voltage and frequency are held constant at the rated values. On standard induction motors, the rated full load speed will normally be between 94 and 96% of synchronous speed. Match the rated speed within 3%.

Rated Speed	Synchronous Speed	Number of Poles
3450	3600	2
1725	1800	4
1140	1200	6
850	900	8

The formula for obtaining the synchronous speed is:

$$S = \frac{120 \times F}{P}$$

Where:

S = Speed in revolutions per minute

F = Frequency in Hertz

P = Number of poles in motor

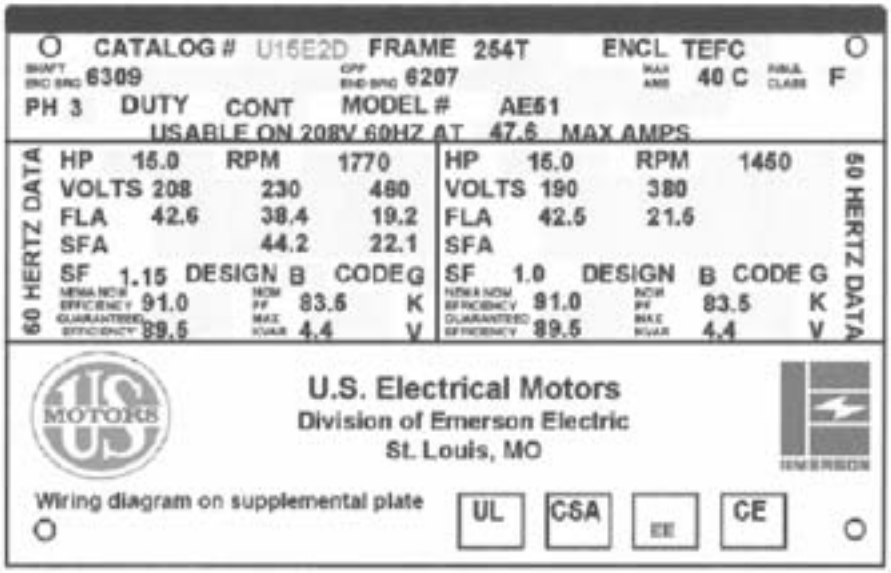

Rated Ambient
Heat is a Critical Item Relating to Life.

The maximum allowable safe operating temperature occurring at the hottest spot within a motor is determined by:
1. The thermal capability of all the insulating materials used within the motor. This is insulation class and is on the nameplate.
2. The heat created within the motor due to losses. This is the temperature rise and not on the nameplate.
3. The temperature of the air surrounding the motor. This is the ambient temperature and is on the nameplate. Common Ambient is 40ºC.

Matching the Rated Ambient is the most important.

Time Rating
General purpose motors will be rated for continuous duty. You can always replace a motor which is not designed for continuous duty with one that is designed for continuous duty.

Rated Horsepower
This represents the rated mechanical power output. When application horsepower requirements fall between two standardized values, chose the larger size. This adds a margin of safety that will reduce the motor's operating temperature rise and extend the operating life of the motor.

Standard Horsepower Ratings
1 thru 100 HP

1	30
1-1/2	40
2	50
3	60
5	75
7-1/2	100
10	
15	
20	
25	

Motor Service Factor
- An AC motor is suitable for continuous operation at rated load under usual service conditions. When the voltage and frequency are maintained, the motor may be overloaded up to the horsepower obtained by multiplying the rated horsepower by the service factor shown on the nameplate. 3 HP X 1.15 = 3.45 HP
- If a motor has a service factor, replace it with one that has an equal or better service factor or go to the next highest HP.

Purposes
- To accommodate inaccuracy in predicting system horsepower needs.
- To lengthen insulation life by lowering winding temperature at rated load.
- To handle intermittent or occasional overloads.
- To allow occasionally for ambient above 40°C.
- To compensate for low or unbalanced supply voltages. Use 230 volt motor with service factor for 200 volt line.

The Nameplate tells the story

Enclosure Types
The motor enclosure must protect the windings, bearings and other mechanical parts from moisture, chemicals, mechanical damage and abrasion from grit. The most popular types of enclosures are:

- **Open Dripproof**
  The ODP motor has a free exchange of air with the ambient; drops of liquid or solid particles do not interfere with the operation at any angle from 0 to 15° downward from the vertical. You can use an enclosed motor for replacement in a pinch.
- **Totally Enclosed Fan Cooled**
  The TEFC type enclosure prevents free air exchange but still breathes air. A fan is attached to a stub shaft at the opposite load end and pushes air over the frame during operation to help in the cooling process. You cannot use an open motor to replace it.
- **Explosionproof**
  The Explosionproof type motor is totally enclosed and designed to withstand an explosion of a specified gas or vapor inside the motor casing and prevent the ignition outside the motor by sparks, flashing, or explosion. Type C, D, E, F, G. You must replace this exactly.
- **WPI & WPII**
  These are modified ODPs, with filters, screens, guarded pipe-vent, etc.
- **Totally Enclosed Non-Ventilated**
  The TENV enclosure does not utilize a fan for cooling - but is used in situations where no air is being blown over the motor shell for cooling.
- **Totally Enclosed Air Over**
  This motor relies on the driven fan load to provide cooling air. Do not use in other applications.

Frame Designation-Size

- Motor frame dimensions have been standardized with a uniform frame size numbering system. Based on enclosure, horsepower and speed.
- The NEMA system for designating frames consists of a series of numbers in combination with letters:
  - For Integral HP motors, the first two digits of the frame number are equal to four times the D dimension (shaft height). 256 frame has a shaft height of 25/4 or 6.25".
  - The third and, when required, the fourth digit of the frame number is obtained from the value of 2F (distance between mounting holes when viewed from side).
  - Covers from 143T to 445T, most motors in the range of 1 through 200 horsepower.
- You must use the same frame size.

Frame Designation-Types

- **"T" Frame**
  - Current NEMA standard
  - Re-rated (frame size reduction) because of advancements in motor technology relating mainly to higher temperature ratings of insulating materials, improved magnetic steels and improved bearings
- **"U" Frame**
  - Used between 1952 and 1964
  - In many automotive manufacturing and some process industries, there is still a preference for the "U" frame. Frame is larger, more material, than an equivalent "T" frame motor
- **"Original" Frame**
  - Pre-1952

Frame Designation-Suffixes

- The following letters immediately follow the frame number to denote variations:

– C	Type C Face Mounting
– D	Type D Flange Mounting
– HP, HPH, LP, LPH	Type P Flange Mounting for Vertical Solid Shaft
– P, PH	Type P Flange Mounting for Vertical Hollow Shaft
– JM, JP	Type C Face Close Coupled Pump Mounting
– S	Standard short shaft for direct connection
– T	Current NEMA frame designation
– U	"U" Frame Automotive Duty
– V	Vertical Mounting
– VP	Type P Flange Mounting for Vertical Solid Shaft
– Y	Special Mounting Dimensions. Be careful of these.
– Z	Standard Mounting Dimensions except Shaft Extension. Be careful of these.

Your replacement must have the same suffix letters.

Torque Characteristics

- Design A (and Design E)
  - Normal Starting Torque
  - High Starting Current
  - Brief heavy overloads, such as an injection molding machine. Can use B.
- Design B
  - Normal Starting Torque
  - Low Starting Current
  - General purpose applications. Superstandard. Replaces A & E.
- Design C
  - High Starting Torque
  - Low Starting Current
  - Starting heavy loads. Cannot use B.
- Design D
  - High Starting Torque
  - Low Starting Current/ High Slip
  - High slip, such as a low speed punch press with a heavy flywheel, or hoisting applications. Cannot use B.

Additional Nameplate Data

- **Bearing Part Numbers**
  - Bearing part numbers are shown on the nameplate so that, when required, procurement of replacement bearings can be made prior to taking the motor offline.
  - You should not use a replacement motor with a smaller size bearing.
- **Unique or Special Features**
  - This information could include special features such as refined balance, special insulation treatments, space heaters, internal motor overheat protection or any of many other special construction features.
  - If the motor to be replaced has these, your replacement should also. This is particularly true of overheat protection.

NEMA Dimensions

T & U Frame

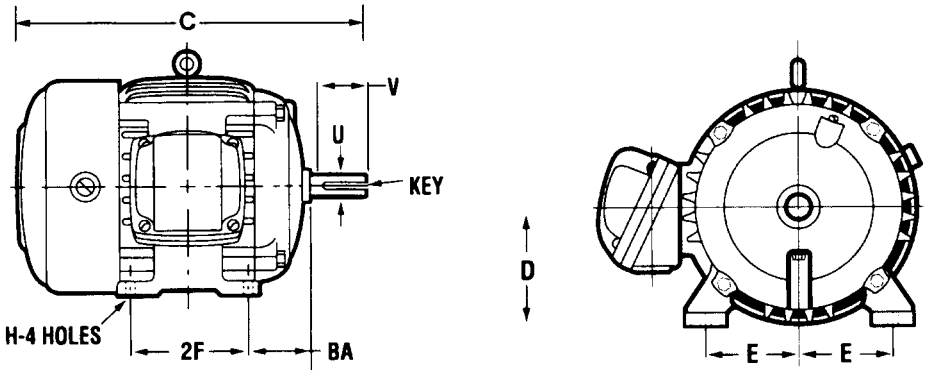

Frame	D	E	2F	H	U	BA	V min.	Key Width	Key Thickness	Key Length	C
48	3.00	2.13	2.75	0.34	0.50	2.50	-	-	0.05	-	-
56	3.50	2.44	3.00	0.34	0.63	2.75	-	0.19	0.19	1.38	-
143T	3.50	2.75	4.00	0.34	0.88	2.25	2.00	0.19	0.19	1.38	-
145T	3.50	2.75	5.00	0.34	0.88	2.25	2.00	0.19	0.19	1.38	-
182	4.50	3.75	4.50	0.41	0.88	2.75	2.00	0.19	0.19	1.38	14.09
182T	4.50	3.75	4.50	0.41	1.13	2.75	2.50	0.25	0.25	1.75	-
184	4.50	3.75	5.50	0.41	0.88	2.75	2.00	0.19	0.19	1.38	15.00
184T	4.50	3.75	5.50	0.41	1.13	2.75	2.50	0.25	0.25	1.75	-
213	5.25	4.25	5.50	0.41	1.13	3.50	2.75	0.25	0.25	2.00	18.44
213T	5.25	4.25	5.50	0.41	1.38	3.50	3.13	0.31	0.31	2.38	-
215	5.25	4.25	7.00	0.41	1.13	3.50	2.75	0.25	0.25	2.00	19.94
215T	5.25	4.25	7.00	0.41	1.38	3.50	3.13	0.31	0.31	2.38	-
254U	6.25	5.00	8.25	0.53	1.38	4.25	3.50	0.31	0.31	2.75	23.50
254T	6.25	5.00	8.25	0.53	1.63	4.25	3.75	0.38	0.38	2.88	-
256U	6.25	5.00	10.00	0.53	1.38	4.25	3.50	0.31	0.31	2.75	25.25
256T	6.25	5.00	10.00	0.53	1.63	4.25	3.75	0.38	0.38	2.88	-
284U	7.00	5.50	9.50	0.53	1.63	4.75	4.63	0.38	0.38	3.75	26.38
284T	7.00	5.50	9.50	0.53	1.88	4.75	4.38	0.50	0.50	3.25	-
284TS	7.00	5.50	9.50	0.53	1.63	4.75	3.00	0.38	0.38	1.88	-
286U	7.00	5.50	11.00	0.53	1.63	4.75	4.63	0.38	0.38	3.75	27.88
286T	7.00	5.50	11.00	0.53	1.88	4.75	4.38	0.50	0.50	3.25	-
286TS	7.00	5.50	11.00	0.53	1.63	4.75	3.00	0.38	0.38	1.88	-
324U	8.00	6.25	10.50	0.66	1.88	5.25	5.38	0.50	0.50	4.25	30.94
324T	8.00	6.25	10.50	0.66	2.13	5.25	5.00	0.50	0.50	3.88	-
324TS	8.00	6.25	10.50	0.66	1.88	5.25	3.50	0.50	0.50	2.00	-
326U	8.00	6.25	12.00	0.66	1.88	5.25	5.38	0.50	0.50	4.25	30.94
326T	8.00	6.25	12.00	0.66	2.13	5.25	5.00	0.50	0.50	3.88	-
326TS	8.00	6.25	12.00	0.66	1.88	5.25	3.50	0.50	0.50	2.00	-
364U	9.00	7.00	11.25	0.66	2.13	5.88	6.13	0.50	0.50	5.00	33.06
364US	9.00	7.00	11.25	0.66	1.88	5.88	3.50	0.50	0.50	2.00	-
364T	9.00	7.00	11.25	0.66	2.38	5.88	5.63	0.63	0.63	4.25	-
364TS	9.00	7.00	11.25	0.66	1.88	5.88	3.50	0.50	0.50	2.00	-
365U	9.00	7.00	12.25	0.66	2.13	5.88	6.13	0.50	0.50	5.00	33.06
365US	9.00	7.00	12.25	0.66	1.88	5.88	3.50	0.50	0.50	2.00	-
365T	9.00	7.00	12.25	0.66	2.38	5.88	5.63	0.63	0.63	4.25	-
365TS	9.00	7.00	12.25	0.66	1.88	5.88	3.50	0.50	0.50	2.00	-
404U	10.00	8.00	12.25	0.81	2.38	6.63	6.88	0.63	0.63	5.50	36.38
404US	10.00	8.00	12.25	0.81	2.13	6.63	4.00	0.50	0.50	2.75	-
404T	10.00	8.00	12.25	0.81	2.88	6.63	7.00	0.75	0.75	5.63	-
404TS	10.00	8.00	12.25	0.81	2.13	6.63	4.00	0.50	0.50	2.75	-
405U	10.00	8.00	13.75	0.81	2.38	6.63	6.88	0.63	0.63	5.50	37.88
405US	10.00	8.00	13.75	0.81	2.13	6.63	4.00	0.50	0.50	2.75	-
405T	10.00	8.00	13.75	0.81	2.88	6.63	7.00	0.75	0.75	5.63	-
405TS	10.00	8.00	13.75	0.81	2.13	6.63	4.00	0.50	0.50	2.75	-

Motor ID Guide

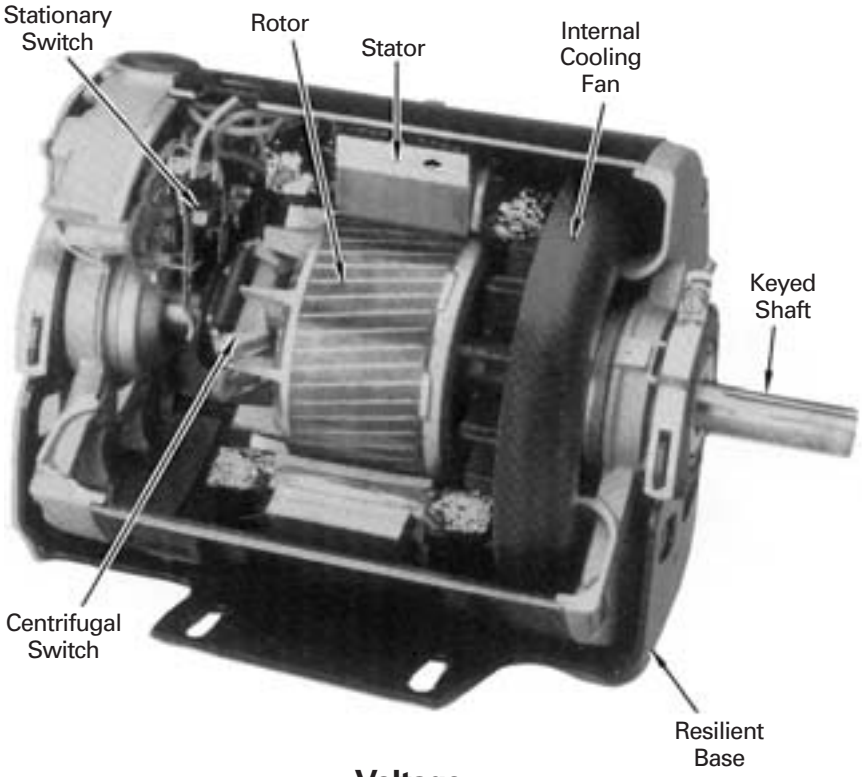

Enclosures

Rotation

Type

RPM

Bearing Mounts

Voltage

ID Guide designed for single phase HVAC motors. Manufactured under Nema standards.

Introduction

The Motor Identification Guide has been prepared as an aid for the speedy replacement of unknown motors. In order to keep it simple and uncomplicated for the non-technical user, it has been designed to identify most but not all of the NEMA standard HVAC motor replacements used in residential and light commercial applications. The Guide does not address the replacement of three phase and capacitor start-capacitor run motors.

To identify the defective unknown motor, start at the Flow Chart on the first page and identify the type of motor. To determine the correct speed(s), go to the Determining Speed Section for the particular type of motor. All of the other information needed to determine the correct replacement can be found in the General Informatoion Section.

Preidentification Motor Check List

Motor Type: Shaded Pole, Permanent Split Capacitor, Split Phase, Capacitor Start

Speed(s): Typical Nameplate RPM

No. of Poles	Synchronous RPM	Split Phase & Capacitor Start	Permanent Split Capacitor	Shaded Pole
2	3600	3450	—	3000
4	1800	1725	1625	1550
6	1200	1140	1075	1050
8	900	840	825	—

Frame Size or Diameter:			42 Fr or 4 7/8 in.	48 Fr or 4 1/2 in.	56 FR or 6 1/4 in.
	3.3 in.	4.4 in.			

Horsepower: 1/100 to 1/6 usually shaded pole
1/6 to 1/2 usually PSC or Split Phase

Enclosure: Open Air Over Open Drip-Proof Open One End Enclosed Totally Enclosed Air Over
Type: Totally Enclosed Non Vented Totally Enclosed Fan Cooled

Voltage: 115 208 230 277 460

Mount Rigid Base Torsion Flex Cradle Mount Flange Mount
Type: Stud Mount Adjustable Band Double Wire Ring

Lead Wires: White Black Green Purple Yellow Brown Red Blue Violet

Rotation: Clockwise Counterclockwise

Bearings: Ball Sleeve (Oil Holes have Yellow Plugs)

Motor Types

Does it have 1 or more brown leads? → **Yes**
and / or
Does it have at least one capacitor? → **Yes**

No

Does it have visible pole pieces? (Figure 1) (Figure 2) (End Plate must be removed for visual inspection) → **Yes** → **Shaded Pole**

Shaded Pole motors have individual stator coil windings and a copper band (shading coil) around one side of each stator pole (Figure 1) (Figure 2).

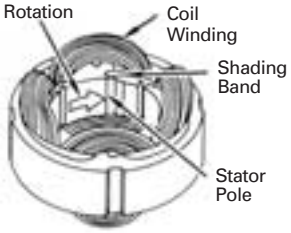

1550 RPM

Figure 1

Shaded-Pole Motor Stack - 2 Poles 3000 RPM

Figure 2

No

Does it have two internal windings (Figure 3) and a switch mechanism on the shaft? (Figure 4) → **Yes** → **Go to Split Phase**

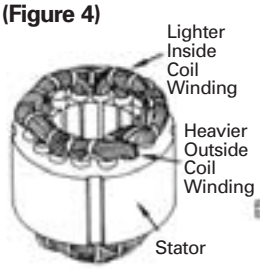

Figure 3

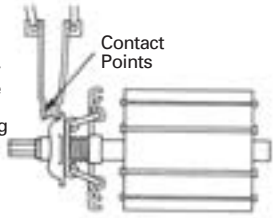

Figure 4

The centrifugal switch (Figure 4), which is concealed inside the motor frame, is controlled by the speed of the motor shaft. The switch closes automatically at low speeds and opens at high speeds.

No
Must Be
3 Phase Motor

Not Covered in Guide

Does the capacitor have a metal case and one of these three shapes? (Figure 5) (Figure 6) (Figure 7) → **Yes** → **Go to Permanent Split Capacitor**

Figure 5

Usually Mounted on Compressor

Figure 6

Figure 7

Permanent Split Capacitor motors have a connected capacitor. There are also coils wound around the stator face (Figure 8) (Figure 9).

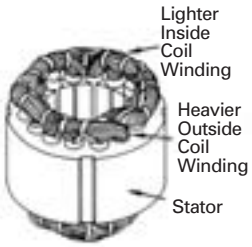

Figure 8

Figure 9

No

Does the capacitor have a round, black, plastic case (Figure 10) and does the motor have an internal switch on the shaft? (Figure 4) → **Yes** → **Go to Capacitor Start**

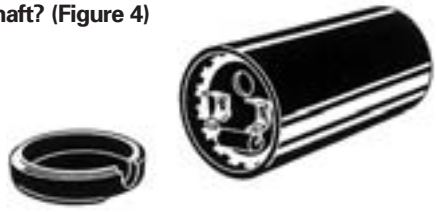

Figure 10

No

Are there at least 2 capacitors? One of the capacitors must be a round black plastic and the other metal oval. → **Yes** → **Must Be Capacitor Start Capacitor Run**

Not Covered in Guide

Speed Shaded Pole

Determining Shaded Pole Speeds

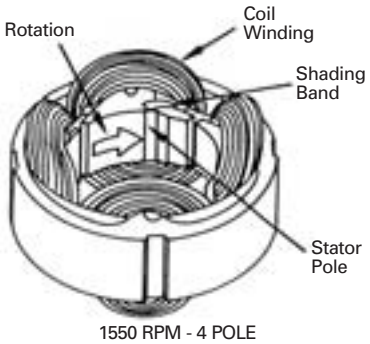

Figure 11

Shaded Pole motors have individual stator coil windings and a copper band (shading coil) around one side of each stator pole (Figure 11) (Figure 12 and Figure 12A).

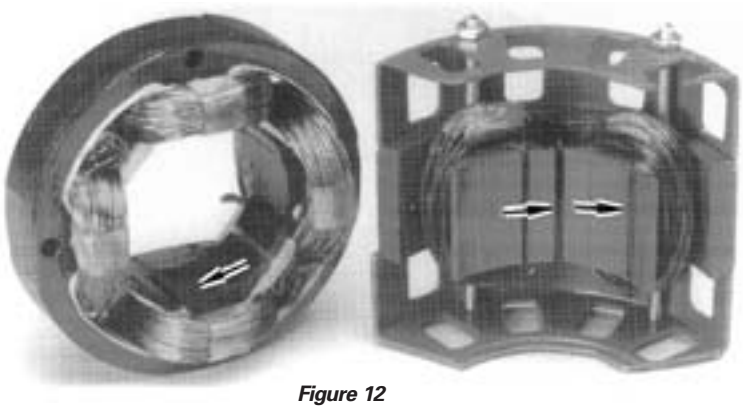

Figure 12

To determine the speed for a single speed motor, count the poles and refer to Chart A.

Chart A

Number of Poles	Normal High Speed
2	3000 RPM
4	1550 RPM
6	900 to 1150 RPM

Check the colors on the wiring to determine it if is multiple speeds (Diagram 2). The number of poles from Chart A determines the highest speed.

Typical Wiring Diagram for Shaded Pole Motors with standard wiring color codes as used by most manufacturers (Diagram 1 and Diagram 2).

For Direction of Rotation, Rotates towards shading.

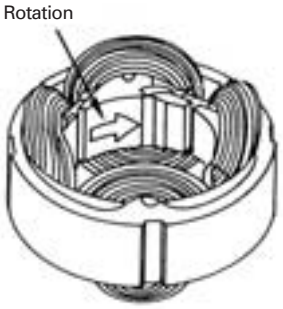

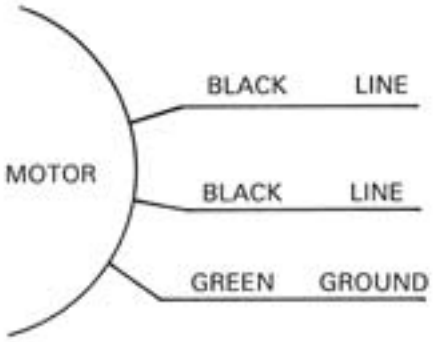

Diagram 1 - Single Speed

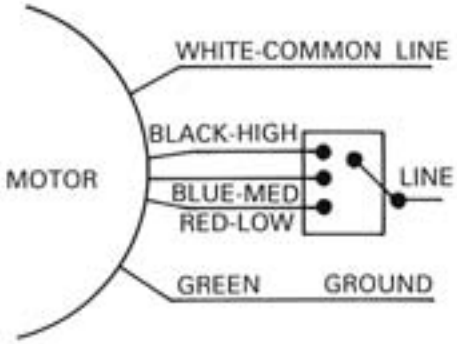

Diagram 2 - Three Speed

PSC Speed

Determining PSC Speed

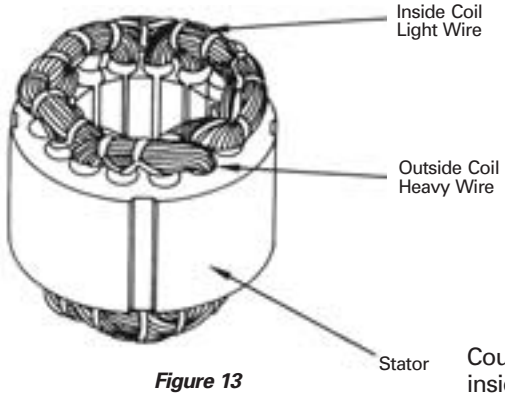

Figure 13

Figure 13A

Count the number of coils on either the inside or the outside set for single speed. For multiple speeds, the number of coils in either the inside or outside set will determine the highest speed (Chart B).

Chart B

Number of Coils	Normal High Speed
4	1625 RPM
6	1075 RPM
8	825 RPM

PSC Motor: Two rows of windings distinguish PSC motors. Main windings are typically located on the outside. Start or auxiliary windings are located on the inside (Figure 13 and Figure 13A).

See Figure 24 for more information on counting coils.

For multiple speeds refer to the following charts.

Permanent-Split Capacitor motors have many different kinds of wiring arrangements. The standard for most manufacturers is shown (Diagram 3) (Diagram 4) (Diagram 5) (Diagram 6).

Typical Wiring Diagram for P.S.C.

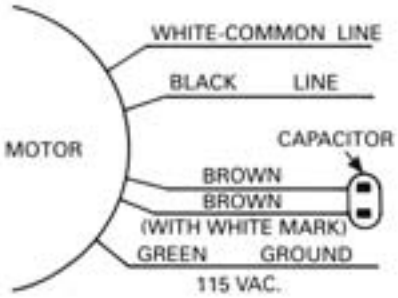

Diagram 3 - Using 2 Capacitor Leads

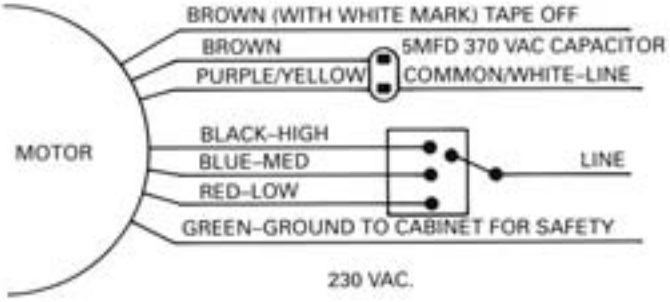

Diagram 5 - Using 1 Capacitor Lead

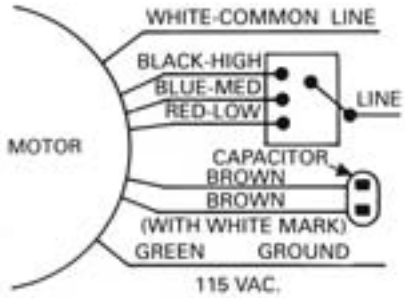

Diagram 4 - Using 2 Capacitor Leads

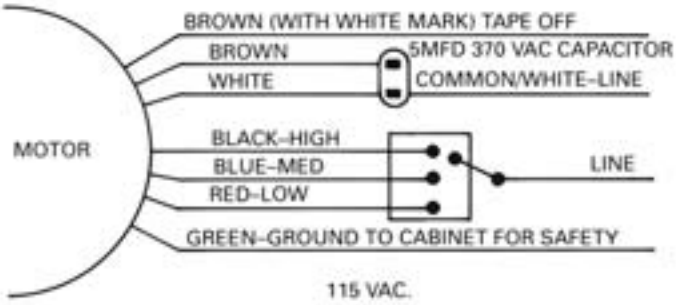

Diagram 6 - Using 1 Capacitor Lead

Speed Split Phase

Split Phase

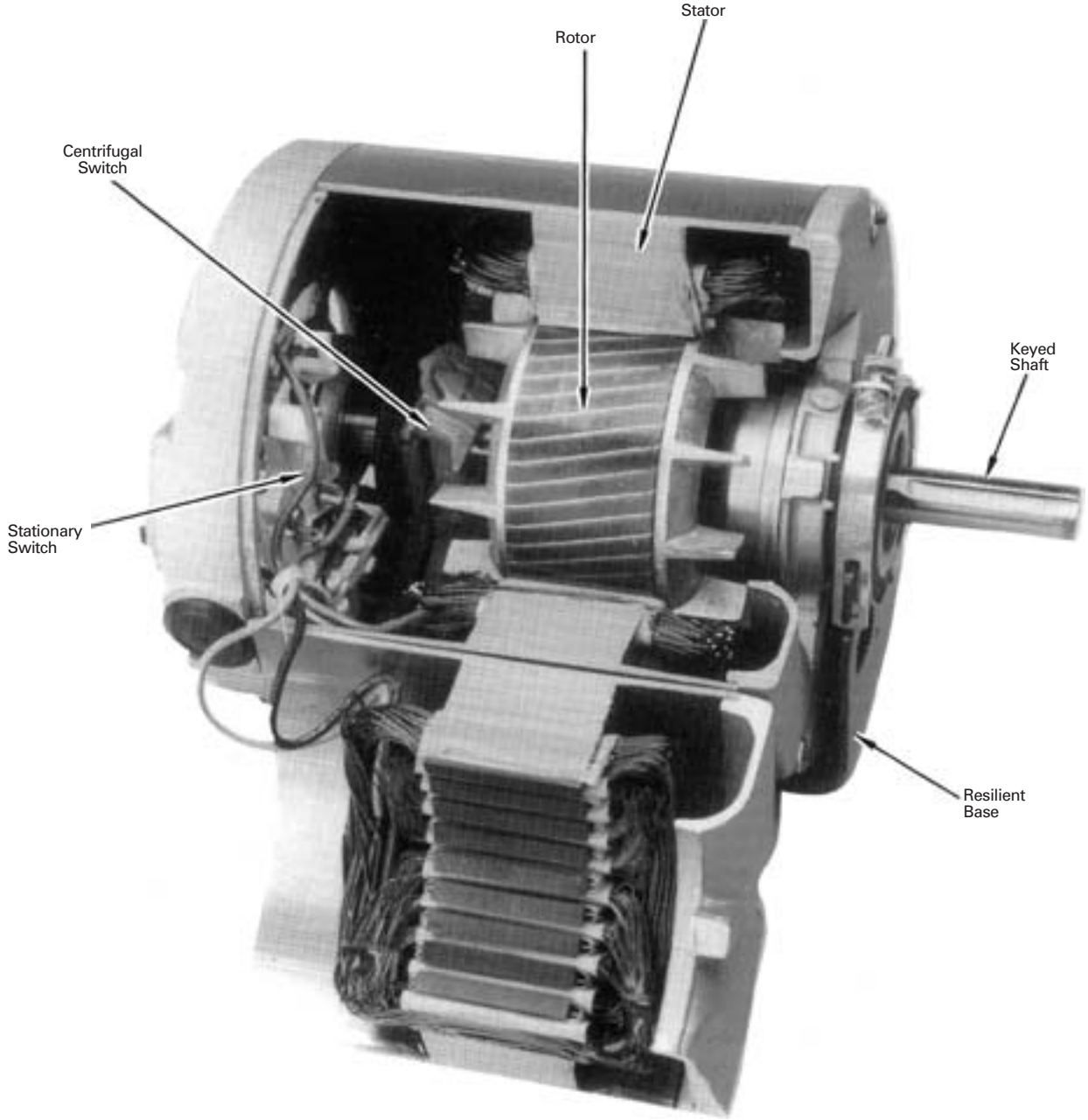

Speed Split Phase

Determining Split Phase Speed

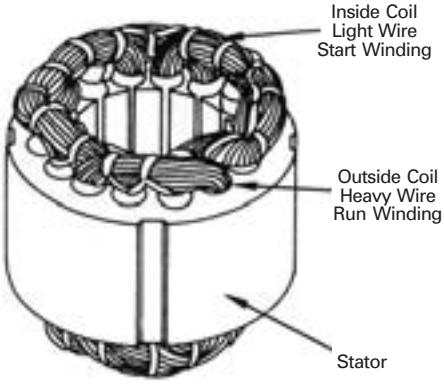

Figure 14

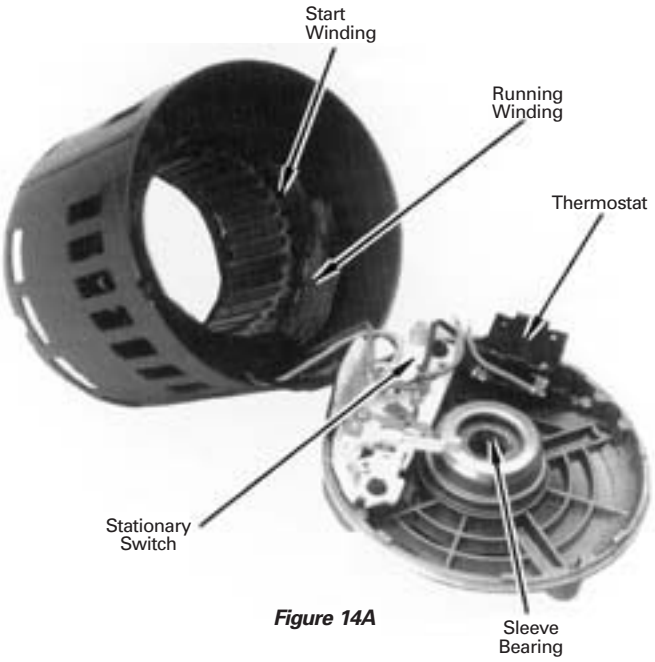

Figure 14A

Count the number of coils on either the inside or the outside set for single speed (Figure 14). For multiple speeds, the number of coils in either the inside or outside determine the highest speed (Chart C).

See Figure 24 for more information on counting coils.

Chart C

Number of Coils	Normal High Speed
2	3450 RPM
4	1725 RPM
6	1140 RPM
8	840 RPM

- Motors with multiple sets of switch contacts are multiple speeds.

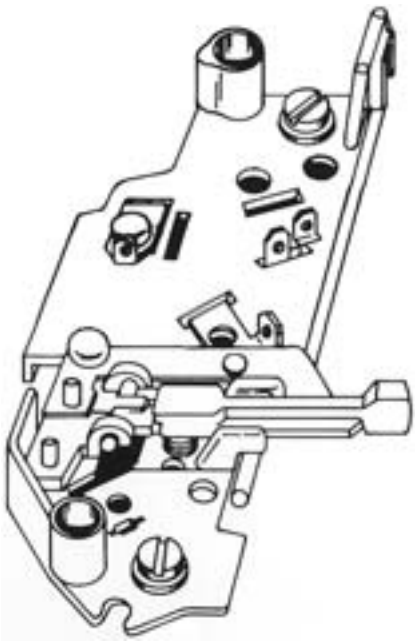

1 Speed Switch

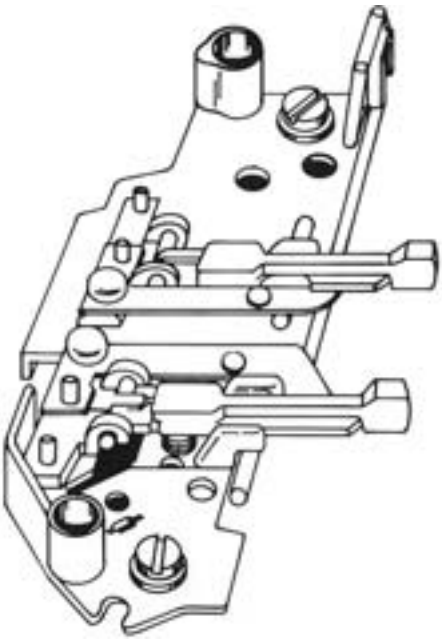

2 Speed Switch

Speed Capacitor Start

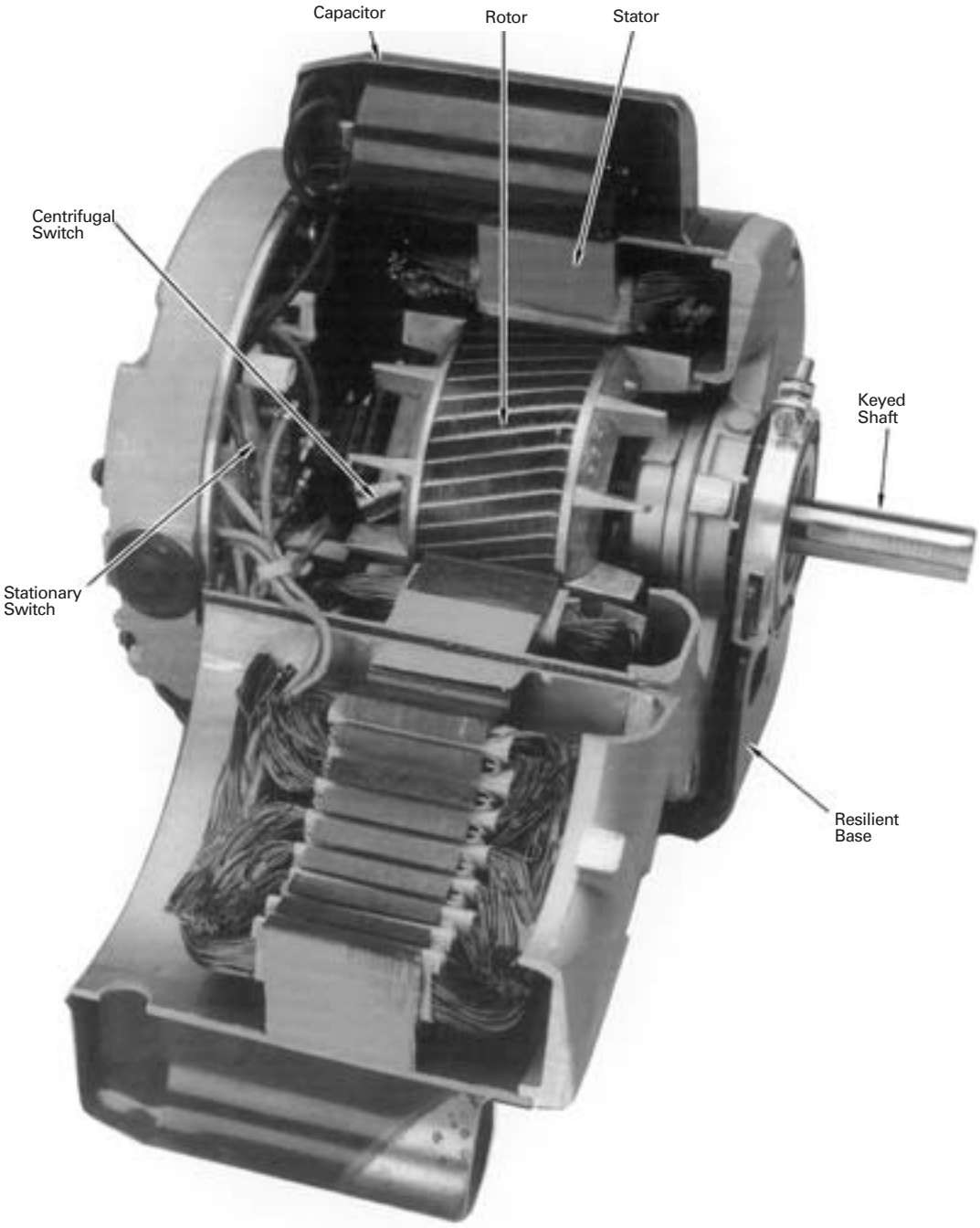

Speed Capacitor Start

Determining Capacitor Start Speeds

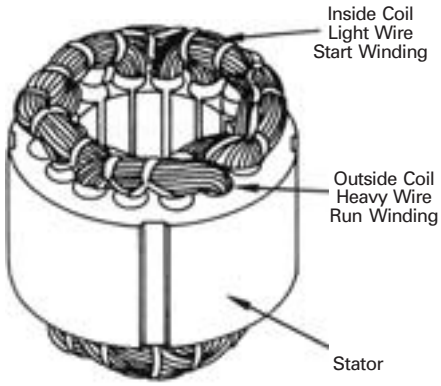

Figure 15

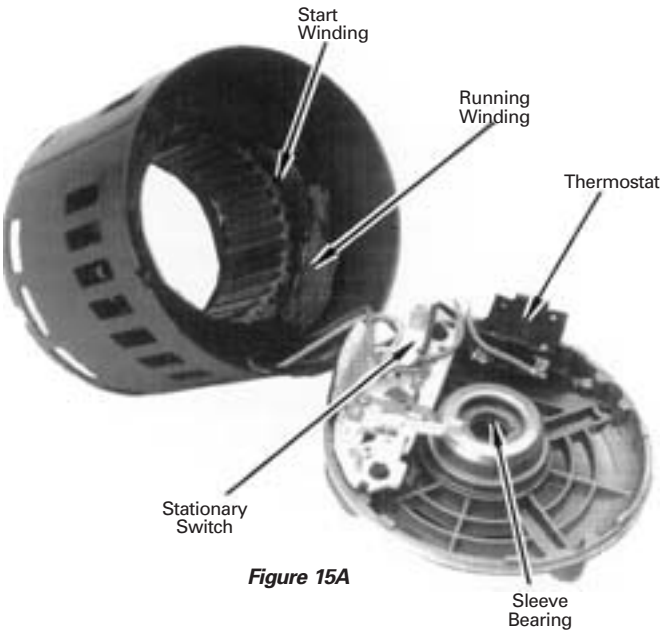

Figure 15A

Count the number of coils on either the inside or the outside set for single speed (Figure 15). For multiple speeds, the number of coils in either the inside or outside determine the highest speed (Chart D).

See Figure 24 for more information on counting coils.

Chart D

Number of Coils	Normal High Speed
2	3450 RPM
4	1725 RPM
6	1140 RPM
8	840 RPM

- Motors with multiple sets of switch contacts are multiple speeds.

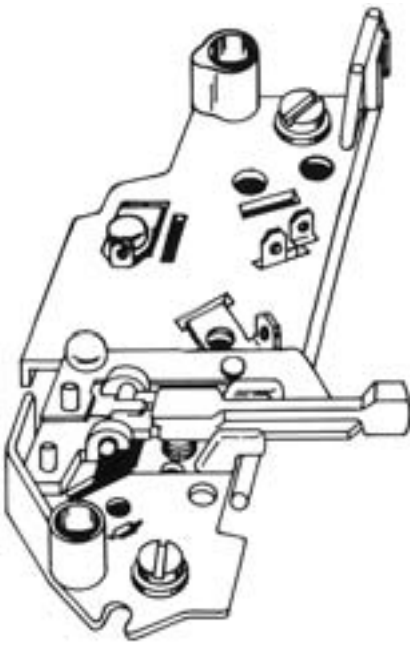

1 Speed Switch

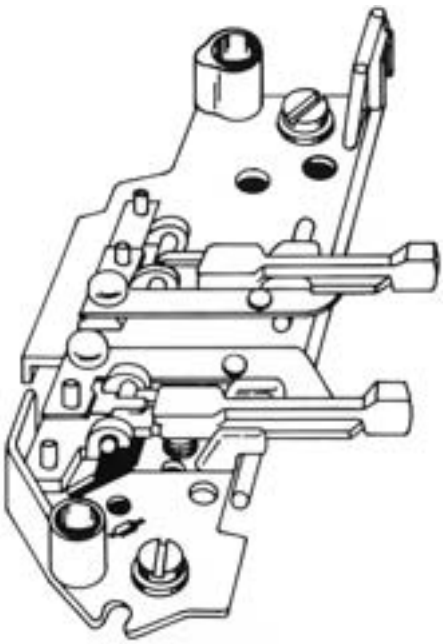

2 Speed Switch

General Information

Frame Size

The NEMA chart is the National Electrical Manufacturer's Association coding for motor frame size and mounting construction. The frame designation refers to the number of 16/ths of an inch from the shaft center line to the base mounting dimension. For example, a NEMA 48 frame is 48/16th's or 3 inches from shaft center line to the base. Frame size is associated with split phase and capacitor start motors because they are typically base mounted.

Shaded pole and permanent split capacitor motors are normally not base mounted and are designated by diameter rather than frame size. The diameter can be determined by measing the diameter of the motor at the face of the end shield. Find the corresponding frame size on Chart E.

Chart E

Motor Diameter (+ or - ¼)	Frame Size
6 ¼"	56 Frame
5 ½"	48 Frame
4 7/8"	42 Frame

Determining Horsepower

Generally, motors of the same type, same number of poles, same diameter, and same stator stack length are the same nominal horsepower. The stator stack length can be determined by measuring the core dimples that are created when the stator core is staked to the shell by the manufacturer. Measuring these dimples will give a close approximation of the stack length. See Figure 15B. A more precise method would be to remove the endshields to get into the stator bore and measure the stack.

The stator stack length for multiple speed PSC and shaded pole motors will be slightly longer than a single speed motor of the same horsepower.

For examples of 42 and 48 frame stack to horsepower relations, see Chart F on horsepower vs. stack length.

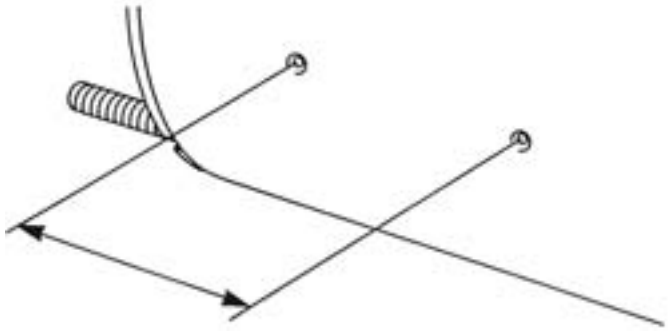

Figure 15B

Motor Enclosure Types

Always try to match the replaced motors ventilation. Poor cooling will cause overheating.

Hint: In most applications a totally enclosed can be substituted for an open motor. Do not replace totally enclosed motors with open.

Open - Has ventilation holes in shell and/or endshield. Used in dry, clean areas. Air moving over the coils produces maximum ventilation.

OPAO - Open Air Over, must be mounted in the airstream
Hint: Probably a direct drive blower or fan motor.

OPDFpf - Open Drip-proof, openings are located to prevent drops falling from less than 15 degrees from vertical. Usually both endplates and the top half of the motor is enclosed.
Hint: Probably a belted blower motor.

One End Enclosed - For use in vertical positions with the shaft either up or down. The up facing end shield is enclosed to prevent rain from entering.
Hint: Probably a condenser fan motor.

Totally Enclosed - Has no openings in either the shell or endshield. usedin dirty moist areas.

TEAO - Totally Enclosed Air Over, must be mounted in airstream produced by the driven fan or blower.
Hint: probably a direct drive blower or fan motor.

TENV - Totally Enclosed Non Vented, not necessary to mount in airstream.
Hint: Drives a belted fan in dirty locations.

TEFC - Totally Enclosed Fan Cooled, has an external fan directly mounted to the motor shaft. Usually a shroud surrounds the fan and directs cooling air over the motor.
Hint: Usually mounted in dirty areas with reduced or no air flow.

General Information

Motor Mountings

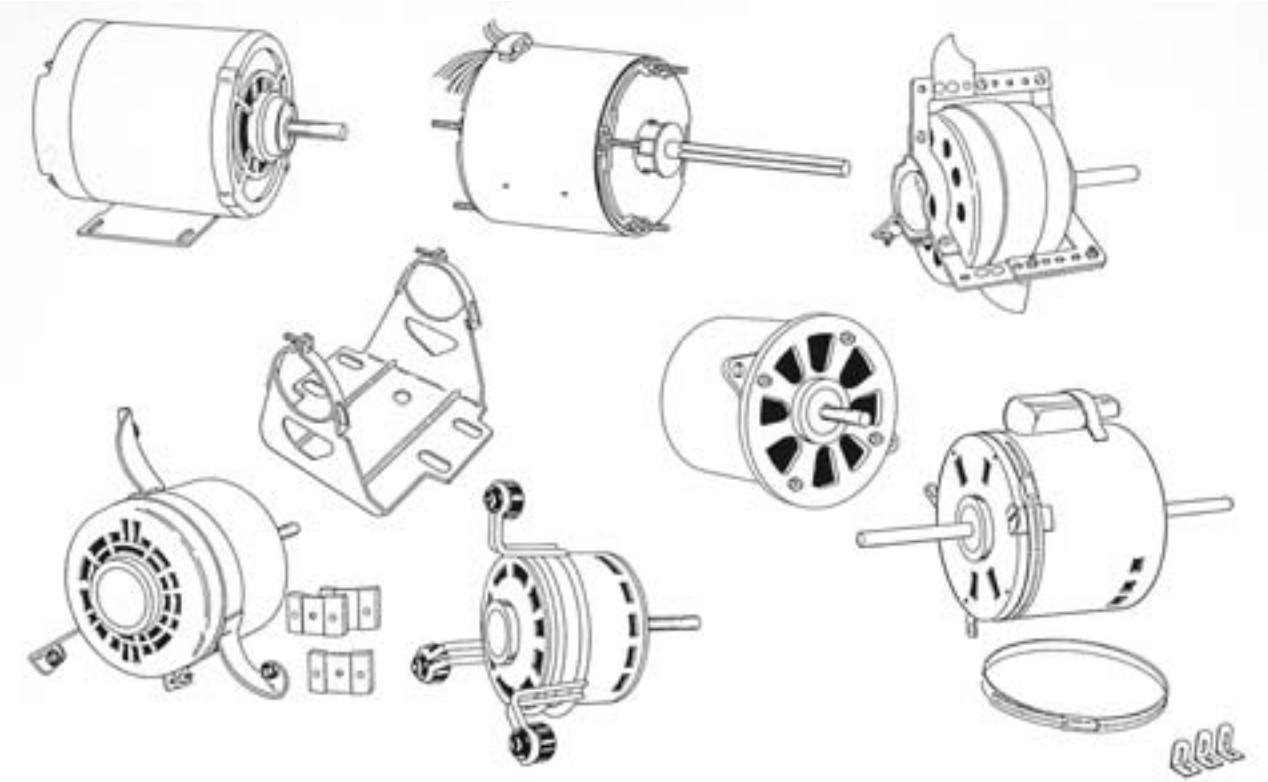

Wiring Color Code for Shaded Pole and P.S.C. Motors

White - 115 Volt Common
Yellow or Purple - 120 Volt Common
Green - Ground
Black - Hi Speed
Blue - Medium Speed
Red - Low Speed
Brown - Capacitor leads. Capacitor leads usually have flag connectors. OEM motors usually have one capacitor lead and replacement motors usually have two capacitor leads. One of the two capacitor leads on a two lead motor has a white stripe.

Rotation

Most manufacturers determine single shaft motor rotation from the shaft end. An exception is G.E. that determines it from the lead end (where lead wires leave end shield).

Rotation on a double shaft motor is usually determined from the lead end (where lead wires leave end shield).

Dust deposits on the leading edge (Figure 16) of the rotor studs or a fan indicate the direction of rotation. **Rotation is in the direction towards the deposits.**

In cases where the correct rotation motor is not available as a replacement, here are a few hints.

1. A shaded pole can be replaced by a PSC. A PSC cannot be replaced by a shaded pole.
2. Shaded pole motors are not electrically reversible but <u>some</u> are mechanically reversible. Remove an end shield and turn the stator around making sure that the stator is exactly centered in the relationship to the rotor.
3. Select a double shaft motor and cut one shaft off.

Figure 16

Dust Deposit on Leading Edge

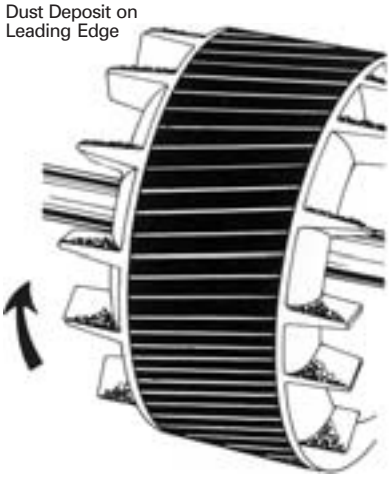

General Information

Bearings

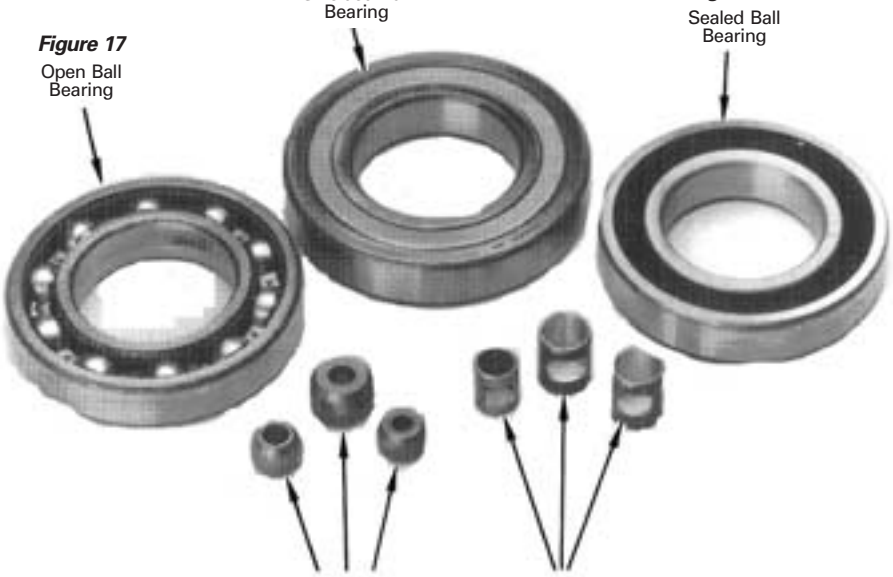

Bearings Ball	Open (Figure 17) Shielded (Figure 18) Sealed (Figure 19)
Self Align	(Figure 20)
All Angle	(Figure 21)

Capacitor Leads

P.S.C. original equipment motors usually have one brown capacitor lead. P.S.C. replacement motors usually have two brown capacitor leads. One of the two replacement motor capacitor leads has a white band or white piece of tape around it.

How to replace a one capacitor lead motor with a two capacitor lead motor.
Insulate the terminal on the white banded lead and don't use it. Connect the remaining lead (Figure 22).

How to replace a two capacitor lead motor with a single lead motor.
Use a jumper wire to connect the remaining capacitor terminal to the common line (Figure 23).

Figure 23

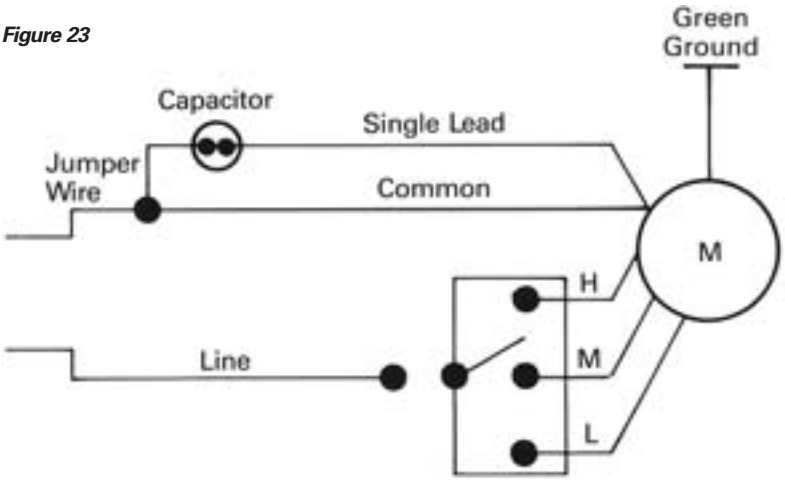

Figure 22

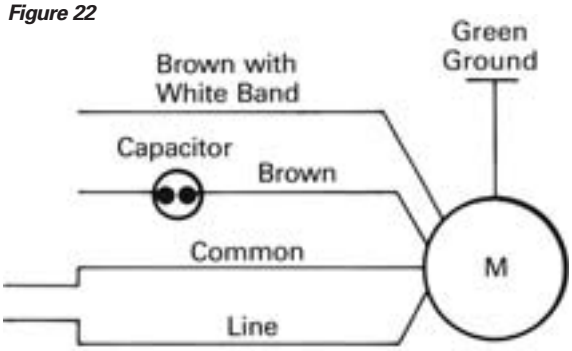

NEMA Chart

NEMA Motor Frame Dimensions Standards

As established by the National Electrical Manufacturers Association

Horsepower vs. Stack Length

NEMA	D	2D	2F	BA	H	N - W	U	Shaft key Wide	Shaft key Thick	Shaft key Long
42	2 - 5/8	3 - 1/2	1 - 11/16	2 - 1/16	9/32 slot	1 - 1/8	3/8	—	0.05 flat	—
48	3	4 - 1/4	2 - 3/4	2 - 1/2	11/32 slot	1 - 1/2	1/2	—	0.05 flat	—
56	3 - 1/2	4 - 7/8	3	2 - 3/4	11/32 slot	1 - 7/8	5/8	3/16	3/16	1 - 3/8
143T	3 - 1/2	5 - 1/2	4	2 - 1/4	11/32 dia.	2 - 1/4	7/8	3/16	3/16	1 - 3/8
145T	3 - 1/2	5 - 1/2	5	2 - 1/4	11/32 dia.	2 - 1/4	7/8	3/16	3/16	1 - 3/8
182T	4 - 1/2	7 - 1/2	4 - 1/2	2 - 3/4	13/32 dia.	2 - 3/4	1 - 1/8	1/4	1/4	1 - 3/4
184T	4 - 1/2	7 - 1/2	4 - 1/2	2 - 3/4	13/32 dia.	2 - 3/4	1 - 1/8	1/4	1/4	1 - 3/4
213T	5 - 1/4	8 - 1/2	5 - 1/2	3 - 1/2	13/32 dia.	3 - 3/8	1 - 3/8	5/16	5/16	2 - 3/8
215T	5 - 1/4	8 - 1/2	7	3 - 1/2	13/32 dia.	3 - 3/8	1 - 3/8	5/16	5/16	2 - 3/8

Most 56Z frame motors have 1/2" x 1 - 9/16" shaft.

Oil Burner Motor Flange Dimensions

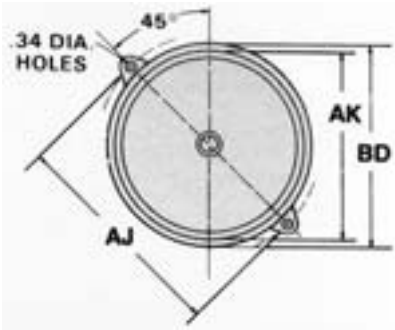

NEMA Frame	Bolt Circle AJ	Rabbet Dia. AK	Outside Dia. BD
48M	6 - 3/4"	5 - 1/2"	6 - 1/4" max.
48N 56N	7 - 1/4"	6 - 3/8"	7" max.

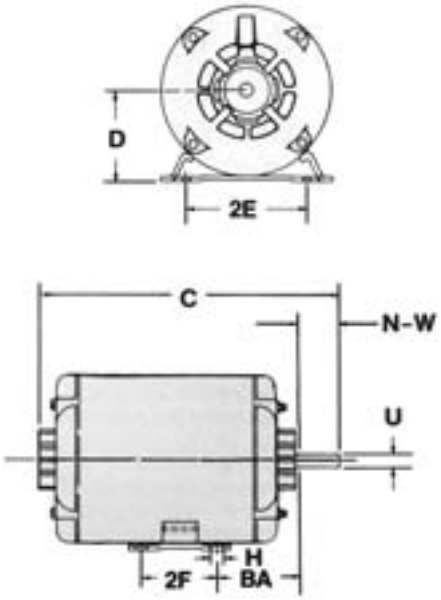

Horsepower vs. Stack Length* for Single Speed Motors

*Rotor lamination length less end rings and fans are equal to stack length.

(5.5" Dia.) NEMA 48 Frame

Horsepower Rating	# of Poles 4	6	8
1/4	1.0-1.25"	1.5-1.75"	1.75-2.0"
1/3	1.5-1.75"	1.75-2.0"	2.25-2.5"
1/2	1.75-2.0"	2.0-2.25"	2.75-3.0"
3/4	2.0-2.25"	2.5-3.00"	—

(4.8" Dia.) NEMA 42 Frame

Horsepower Rating	# of Poles 4	6	8
1/4	1.5-1.75"	2.0-2.25"	2.5-3.00"
1/3	2.0-2.25"	2.5-3.00"	—
1/2	2.5-3.00"	—	—
3/4	—	—	—

Motor Characteristics

Figure 24

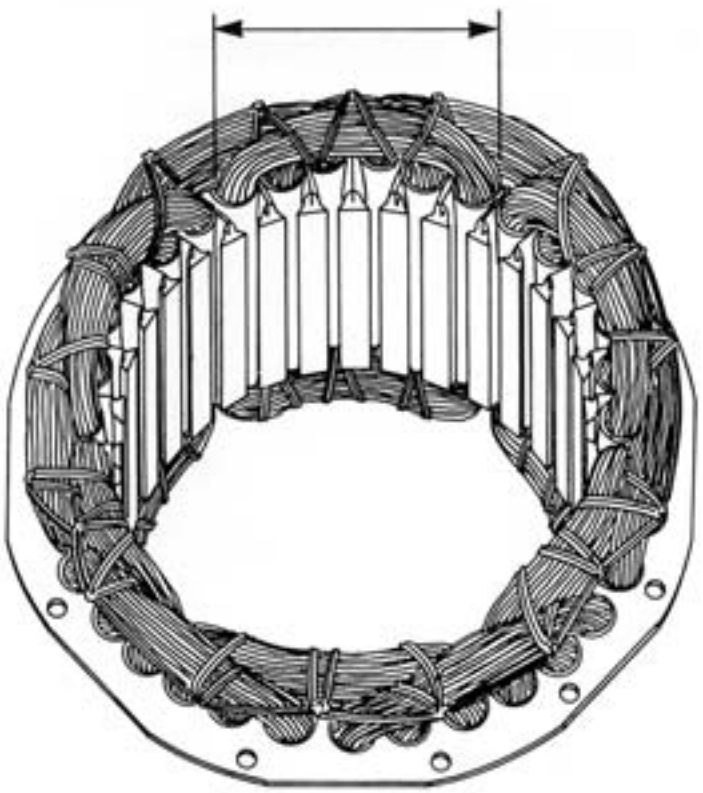

Type	HP	Power Requirements Phase	Voltage	Speeds	Reverse	Characteristics	Uses
Shaded-Pole Induction	.035 .2 kW (1/20-1/4 hp)	Single	Usually 120	900 1200 1800 3600	No	Light duty, low in efficiency.	Small fans, freezer blowers, arc welder blower, hair dryers.
Split-Phase	.035-.56 kW (1/20-3/4 hp)	Single	Usually 120	900 1200 1800 3600	Yes	Simple construction.	Fans, furnace blowers, lathes, small shop tools, jet pumps.
Permanent-Split, Capacitor-Induction	.035-.8 kW (1/20-1 hp)	Single	Single voltage 120 or 240	Vari-able 900-1800	yes	Usually custom-designed for special application.	Small Compressors, fans.
Capacitor-Start, Induction-Run	.14-8 kW (1/6-10 hp)	Single	120-240	900 1200 1800 3600	Yes	Long service, low maintenance, very popular.	Water systems, air compressors, ventilating fans, grinders, blower.
Three-Phase, General-Purpose	.4-300 kW (1/2-400 hp)	Three	120-240 240-480 or higher	900 1200 1800 3600	Yes	Very simple construction, dependable, service-free.	Conveyors, dryers, elevators, hoists, irrgation pumps.

Cross Reference

ServiceFirst Item # to Mfg. #

ServiceFirst Item #	Mfg. #
KIT02400	1
KIT02401	9
KIT02402	10
KIT02403	52
KIT02405	13
KIT02406	25
KIT02408	55
KIT02410	56
KIT02411	16
KIT02412	17
KIT02413	43
KIT02414	44
KIT02415	27
KIT02416	26
KIT02417	45
KIT02418	46
KIT02419	35
KIT02420	36
KIT02421	3
KIT02422	30
KIT02423	7
KIT02424	4
KIT02425	19
KIT02426	32
KIT02427	38
KIT02428	11
KIT02429	5
KIT02430	31
KIT02431	8
KIT02432	6
KIT02433	20
KIT02434	34
KIT02435	37
KIT02436	12
KIT02437	51
MOT01875	1676
MOT01877	1090
MOT01878	1374
MOT02852	1678
MOT02853	1679
MOT02854	1680
MOT03419	1674
MOT03438	1675
MOT06000	8661
MOT06002	3851
MOT06003	8666
MOT06006	8667
MOT06007	6880
MOT06009	3852
MOT06010	1444
MOT06011	8665
MOT06012	3097
MOT06013	8302
MOT06014	8301
MOT06015	8348
MOT06016	9393
MOT06017	3846
MOT06018	4811
MOT06019	4961
MOT06020	3847
MOT06021	4960
MOT06022	3849
MOT06023	3848
MOT06024	7025

ServiceFirst Item #	Mfg. #
MOT06025	8042
MOT06026	5345
MOT06027	7040
MOT06028	7041
MOT06029	723
MOT06030	721
MOT06031	724
MOT06032	722
MOT06035	1871
MOT06036	1872
MOT06037	1873
MOT06038	1860
MOT06039	1874
MOT06040	1861
MOT06041	1862
MOT06042	1868
MOT06043	8669
MOT06045	8670
MOT06047	8671
MOT06060	6838
MOT06061	6727
MOT06062	7475
MOT06063	5489
MOT06064	6603
MOT06065	2686
MOT06066	2896
MOT06067	3568
MOT06068	3566
MOT06069	3567
MOT06070	3565
MOT06071	1813
MOT06072	1814
MOT06076	1818
MOT06077	1819
MOT06080	1216
MOT06081	1215
MOT06083	1887
MOT06085	1213
MOT06086	1824
MOT06087	5824
MOT06088	3133
MOT06089	3134
MOT06090	3135
MOT06091	3136
MOT06092	8725
MOT06094	8726
MOT06097	1221
MOT06105	8891
MOT06107	1268
MOT06109	1863
MOT06110	1971
MOT06112	600
MOT06113	8893
MOT06115	1972
MOT06117	601
MOT06119	1865
MOT06120	1973
MOT06121	8899
MOT06122	602
MOT06125	6873
MOT06126	3183
MOT06138	1127
MOT06139	1631
MOT06140	985

ServiceFirst Item #	Mfg. #
MOT06141	839
MOT06142	936
MOT06144	8000
MOT06145	2889
MOT06149	8100
MOT06150	2888
MOT06151	8412
MOT06153	8200
MOT06154	2887
MOT06155	2695
MOT06157	1786
MOT06158	1789
MOT06162	4253
MOT06166	4114
MOT06167	3958
MOT06168	4115
MOT06169	4293
MOT06170	4293H
MOT06171	1194
MOT06172	1193
MOT06173	2758
MOT06174	2759
MOT06175	3022
MOT06178	3863
MOT06179	3864
MOT06180	3865
MOT06182	180
MOT06183	298
MOT06184	1790
MOT06185	430
MOT06186	1893
MOT06187	431
MOT06188	1769
MOT06189	299
MOT06190	4242
MOT06195	9034
MOT06196	9035
MOT06197	9036
MOT06198	4856
MOT06200	4855
MOT06201	1810
MOT06202	1811
MOT06207	5149
MOT06208	3033
MOT06212	2574
MOT06213	2423
MOT06219	3801
MOT06220	3802
MOT06221	3803
MOT06225	3808
MOT06227	3809
MOT06228	1548
MOT06229	865
MOT06230	2569
MOT06232	3813
MOT06234	3814
MOT06236	3815
MOT06240	1468
MOT06241	1469
MOT06242	1470
MOT06243	1471
MOT06244	1981
MOT06245	2097
MOT06246	3196

ServiceFirst Item #	Mfg. #
MOT06248	3083
MOT06250	2302
MOT06253	3580
MOT06254	3251
MOT06255	5866
MOT06256	102
MOT06257	115
MOT06258	119
MOT06259	117
MOT06260	108
MOT06261	110
MOT06262	112
MOT06263	114
MOT06264	103
MOT06265	120
MOT06266	116
MOT06268	109
MOT06269	111
MOT06270	113
MOT06271	8231
MOT06272	3034
MOT06273	2342
MOT06274	8075
MOT06278	1553
MOT06279	1410
MOT06280	1545
MOT06282	3225
MOT06283	3303
MOT06284	1527
MOT06285	1989
MOT06286	6124
MOT06287	6127
MOT06288	5401
MOT06291	2328
MOT06292	5107
MOT06293	3228
MOT06297	1645
MOT06298	1648
MOT06299	644
MOT06300	7994
MOT06302	8054
MOT06303	9993
MOT06304	2166
MOT06305	136
MOT06307	591
MOT06311	3484
MOT06312	5454
MOT06313	5455
MOT06314	5456
MOT06315	5457
MOT06316	9735
MOT06318	1012
MOT06319	855
MOT06320	1142
MOT06322	5108
MOT06324	8558
MOT06325	1124
MOT06326	2554
MOT06328	7024
MOT06331	8008
MOT06332	8009
MOT06333	8537
MOT06334	1152
MOT06336	3640

Cross Reference

ServiceFirst Item # to Mfg. #

ServiceFirst Item #	Mfg. #
MOT06337	3740
MOT06338	2762
MOT06339	2777
MOT06340	2736
MOT06363	1673
MOT09415	8904
MOT09416	8905
MOT09985	5460
MOT09986	5461
MOT09987	5462
MOT10032	1391
MOT10032	1391
MOT10067	1875
MOT10142	8673
MOT10143	1859
MOT10144	3735
MOT10145	1880
MOT10146	8674
MOT10147	1876
MOT10148	3736
MOT10149	1890
MOT10150	1881
MOT10151	8675
MOT10153	3737
MOT10154	1891
MOT10155	1882
MOT10157	3738
MOT10158	1892
MOT10159	1879
MOT10160	3742
MOT10161	2201
MOT10162	2202
MOT10163	2203
MOT10164	2204
MOT10165	1828
MOT10167	1820
MOT10168	1821
MOT10169	1822
MOT10170	1390
MOT10171	1690
MOT10172	1691
MOT10173	1692
MOT10174	1693
MOT10175	1694
MOT10176	1695
MOT10177	1696
MOT10178	1697
MOT10179	8906
MOT10180	8907
MOT10184	6326
MOT10185	6328
MOT10186	6330
MOT10187	1204
MOT10188	1205
MOT10189	1206
MOT10190	1207
MOT10191	1208
MOT10192	5792C
MOT10193	5793C
MOT10194	5794C
MOT10195	5795C
MOT10196	3187C
MOT10197	2808
MOT10198	3252

ServiceFirst Item #	Mfg. #
MOT10199	7094
MOT10200	6764
MOT10201	7095
MOT10202	6768
MOT10203	6766
MOT10204	7096
MOT10205	6769
MOT10206	6771
MOT10207	7097
MOT10208	6767
MOT10209	7098
MOT10210	6765
MOT10211	6795
MOT10212	7099
MOT10213	6770
MOT10214	6796
MOT10215	1225
MOT10216	1226
MOT10217	1227
MOT10218	1228
MOT10219	1229
MOT10220	3035
MOT10221	3400
MOT10222	3401
MOT10223	3402
MOT10225	3404
MOT10226	3405
MOT10227	3320
MOT10228	3330
MOT10229	3340
MOT10230	3350
MOT10231	3300
MOT10232	3360
MOT10233	6128
MOT10234	6129
MOT10235	6130
MOT10236	7385
MOT10237	7232
MOT10238	1125
MOT10239	1126
MOT10240	8052
MOT10241	5459
MOT10242	5451
MOT10243	5463
MOT10244	5453
MOT10245	5450
MOT10247	840CV
MOT10248	841CV
MOT10274	5470
MOT10275	5471
MOT10573	D1E2H
MOT10574	D32E2H
MOT10575	D2E2H
MOT10576	D3E2H
MOT10577	D5E2H
MOT10578	D7E2H
MOT10579	D10E2H
MOT10580	D15E2H
MOT10581	D20E2H
MOT10582	D25E2H
MOT10583	D30E2H
MOT10584	D40E2H
MOT10585	D50E2H
MOT10586	D60E2HP

ServiceFirst Item #	Mfg. #
MOT10587	D75E2HP
MOT10588	D100E2HP
MOT10589	D1E2D
MOT10590	D32E2D
MOT10591	D2E2D
MOT10592	D3E2D
MOT10593	D5E2D
MOT10594	D7E2D
MOT10595	D10E2D
MOT10596	D15E2D
MOT10597	D20E2D
MOT10598	D25E2D
MOT10599	D30E2D
MOT10600	D40E2E
MOT10601	D50E2E
MOT10602	D60E2E
MOT10603	D75E2E
MOT10604	D100E2E
MOT10605	D1E2G
MOT10606	D32E2G
MOT10607	D2E2G
MOT10608	D3E2G
MOT10609	D5E2G
MOT10610	D7E2G
MOT10611	D10E2G
MOT10612	D15E2G
MOT10613	D20E2G
MOT10614	D25E2G
MOT10615	D30E2G
MOT10616	D40E2G
MOT10617	D50E2G
MOT10618	D60E2G
MOT10619	D75E2G
MOT10620	D100E2G
MOT10621	D1E2H2P
MOT10622	D32E2H2P
MOT10623	D2E2H2P
MOT10624	D3S2H2
MOT10625	D5S2H2
MOT10626	D7E2H2C
MOT10627	D10E2H2C
MOT10628	D15E2H2C
MOT10629	D20E2H2C
MOT10630	D25E2H2C
MOT10631	D30E2H2C
MOT10632	D40E2H2C
MOT10633	D50E2H2C
MOT10634	D60E2H2P
MOT10635	D75E2H2P
MOT10636	D100E2H2P
MOT10637	D1E2D2
MOT10638	D32E2D2
MOT10639	D2E2D2P
MOT10640	D3E2D2
MOT10641	D5E2D2
MOT10642	D7E2D2
MOT10643	D10E2D2
MOT10644	D15E2D2
MOT10645	D20E2D2
MOT10646	D25E2D2C
MOT10647	D30E2D2C
MOT10648	D40E2E2C
MOT10649	D50E2E2C
MOT10650	D60E2E2C

ServiceFirst Item #	Mfg. #
MOT10651	D75E2E2C
MOT10652	D100E2E2C
MOT10653	D1E2G2P
MOT10654	D32E2G2P
MOT10655	D2E2G2P
MOT10656	D3E2G2C
MOT10657	D5E2G2C
MOT10658	D7E2G2C
MOT10659	D10E2G2C
MOT10660	D15E2G2C
MOT10661	D20E2G2C
MOT10662	D25E2G2C
MOT10663	D30E2G2C
MOT10664	D40E2G2C
MOT10665	D50E2G2C
MOT10666	D60E2G2C
MOT10667	D75E2G2C
MOT10668	D100E2G2C
MOT10669	D1P2H
MOT10670	D32P2H
MOT10671	D2P2H
MOT10672	D3P2H
MOT10673	D5P2H
MOT10674	D7P2H
MOT10675	D10P2H
MOT10676	D15P2H
MOT10677	D20P2H
MOT10678	D25P2H
MOT10679	D30P2HP
MOT10680	D40P2H
MOT10681	D50P2HP
MOT10682	D60P2HP
MOT10683	D75P2HP
MOT10684	D100P2HP
MOT10685	D1P2B
MOT10686	D32P2B
MOT10687	D2P2B
MOT10688	D3P2B
MOT10689	D5P2B
MOT10690	D7P2B
MOT10691	D10P2B
MOT10692	D15P2B
MOT10693	D20P2B
MOT10694	D25P2B
MOT10695	D30P2B
MOT10696	D40P2B
MOT10697	D50P2B
MOT10698	D60P2B
MOT10699	D75P2B
MOT10700	D100P2B
MOT10701	D1P2G
MOT10702	D32P2G
MOT10703	D2P2G
MOT10704	D3P2G
MOT10705	D5P2G
MOT10706	D7P2G
MOT10707	D10P2G
MOT10708	D15P2G
MOT10709	D20P2G
MOT10710	D25P2G
MOT10711	D30P2G
MOT10712	D40P2G
MOT10713	D50P2G
MOT10714	D60P2G

Cross Reference

ServiceFirst Item # to Mfg. #

ServiceFirst Item #	Mfg. #
MOT10715	D75P2G
MOT10716	D100P2G
MOT10717	D1P2H2P
MOT10718	D32P2H2P
MOT10719	D2P2H2
MOT10720	D3P2H2C
MOT10721	D5P2H2C
MOT10722	D7P2H2C
MOT10723	D10P2H2C
MOT10724	D15P2H2C
MOT10725	D20P2H2C
MOT10726	D25P2H2C
MOT10727	D30P2H2P
MOT10728	D40P2H2C
MOT10729	D50P2H2P
MOT10730	D60P2H2P
MOT10731	D75P2H2P
MOT10732	D100P2H2P
MOT10733	D1P2B2P
MOT10734	D32P2B2
MOT10735	D2P2B2
MOT10736	D3P2B2C
MOT10737	D5P2B2C
MOT10738	D7P2B2C
MOT10739	D10P2B2C
MOT10740	D15P2B2C
MOT10741	D20P2B2C
MOT10742	D25P2B2C
MOT10743	D30P2B2C
MOT10744	D40P2B2C
MOT10745	D50P2B2C
MOT10746	D60P2B2C
MOT10747	D75P2B2C
MOT10748	D100P2B2C
MOT10749	D1P2G2P
MOT10750	D32P2G2P
MOT10751	D2P2G2P
MOT10752	D3P2G2C
MOT10753	D5P2G2C
MOT10754	D7P2G2C
MOT10755	D10P2G2C
MOT10756	D15P2G2C
MOT10757	D20P2G2C
MOT10758	D25P2G2C
MOT10759	D30P2G2C
MOT10760	D40P2G2C
MOT10761	D50P2G2C
MOT10762	D60P2G2C
MOT10763	D75P2G2C
MOT10764	D100P2G2C
MOT10765	U1E2H
MOT10766	U32E2H
MOT10767	U2E2H
MOT10768	U3E2H
MOT10769	U5E2H
MOT10770	U7E2H
MOT10771	U10E2H
MOT10772	U15E2H
MOT10773	U20E2H
MOT10774	U25E2H
MOT10775	U30E2H
MOT10776	H40E2H
MOT10777	H50E2H

ServiceFirst Item #	Mfg. #
MOT10778	H60E2H
MOT10779	H75E2H
MOT10780	H100E2H
MOT10781	U1E2D
MOT10782	U32E2D
MOT10783	U2E2D
MOT10784	U3E2D
MOT10785	U5E2D
MOT10786	U7E2D
MOT10787	U10E2D
MOT10788	U15E2D
MOT10789	U20E2D
MOT10790	U25E2D
MOT10791	U30E2D
MOT10792	H40E2E
MOT10793	H50E2E
MOT10794	H60E2E
MOT10795	H75E2E
MOT10796	H100E2E
MOT10797	U1E2G
MOT10798	U32E2G
MOT10799	U2E2G
MOT10800	U3E2G
MOT10801	U5E2G
MOT10802	U7E2G
MOT10803	U10E2G
MOT10804	U15E2G
MOT10805	U20E2G
MOT10806	U25E2G
MOT10807	U30E2G
MOT10808	H40E2G
MOT10809	H50E2G
MOT10810	H60E2G
MOT10811	H75E2G
MOT10812	H100E2G
MOT10813	U1E2H2P
MOT10814	U32E2H2P
MOT10815	U2E2H2P
MOT10816	U3E2H2C
MOT10817	U5E2H2C
MOT10818	U7E2H2C
MOT10819	U10E2H2C
MOT10820	U15E2H2C
MOT10821	U20E2H2C
MOT10822	U25E2H2C
MOT10823	U30E2H2C
MOT10824	H40E2H2C
MOT10825	H50E2H2C
MOT10826	H60E2H2C
MOT10827	H75E2H2C
MOT10828	H100E2H2C
MOT10829	U1E2D2P
MOT10830	U32E2D2P
MOT10831	U2E2D2P
MOT10832	U3E2D2C
MOT10833	U5E2D2C
MOT10834	U7E2D2C
MOT10835	U10E2D2C
MOT10836	U15E2D2C
MOT10837	U20E2D2C
MOT10838	U25E2D2C
MOT10839	U30E2D2C
MOT10840	H40E2E2C
MOT10841	H50E2E2C

ServiceFirst Item #	Mfg. #
MOT10842	H60E2E2C
MOT10843	H75E2E2C
MOT10844	H100E2E2C
MOT10845	U1E2G2P
MOT10846	U32E2G2P
MOT10847	U2E2G2P
MOT10848	U3E2G2C
MOT10849	U5E2G2C
MOT10850	U7E2G2C
MOT10851	U10E2G2C
MOT10852	U15E2G2C
MOT10853	U20E2G2C
MOT10854	U25E2G2C
MOT10855	U30E2G2C
MOT10856	H40E2G2C
MOT10857	H50E2G2C
MOT10858	H60E2G2C
MOT10859	H75E2G2C
MOT10860	H100E2G2C
MOT10861	U1P2HP
MOT10862	U32P2HP
MOT10863	U2P2HP
MOT10864	U3P2HP
MOT10865	U5P2HP
MOT10866	U7P2HP
MOT10867	U10P2HP
MOT10868	U15P2HP
MOT10869	U20P2HP
MOT10870	U25P2HP
MOT10871	U30P2HP
MOT10872	H40P2HP
MOT10873	H50P2HP
MOT10874	H60P2HP
MOT10875	H75P2HP
MOT10876	H100P2HP
MOT10877	U1P2B
MOT10878	U32P2B
MOT10879	U2P2B
MOT10880	U3P2B
MOT10881	U5P2B
MOT10882	U7P2B
MOT10883	U10P2B
MOT10884	U15P2B
MOT10885	U20P2B
MOT10886	H25P2B
MOT10887	H30P2B
MOT10888	H40P2B
MOT10889	H50P2B
MOT10890	H60P2B
MOT10891	H75P2B
MOT10892	H100P2B
MOT10893	U1P2G
MOT10894	U32P2G
MOT10895	U2P2G
MOT10896	U3P2G
MOT10897	U5P2G
MOT10898	U7P2G
MOT10899	U10P2G
MOT10900	U15P2G
MOT10901	U20P2G
MOT10902	H25P2G
MOT10903	H30P2G
MOT10904	H40P2G
MOT10905	H50P2G

ServiceFirst Item #	Mfg. #
MOT10906	H60P2G
MOT10907	H75P2G
MOT10908	H100P2G
MOT10909	U1P2H2P
MOT10910	U32P2H2P
MOT10911	U2P2H2P
MOT10912	U3P2H2P
MOT10913	U5P2H2P
MOT10914	U7P2H2P
MOT10915	U10P2H2P
MOT10916	U15P2H2P
MOT10917	U20P2H2P
MOT10918	U25P2H2P
MOT10919	U30P2H2P
MOT10920	H40P2H2P
MOT10921	H50P2H2P
MOT10922	H60P2H2P
MOT10923	H75P2H2P
MOT10924	H100P2H2P
MOT10925	U1P2B2P
MOT10926	U32P2B2P
MOT10927	U2P2B2P
MOT10928	U3P2B2C
MOT10929	U5P2B2C
MOT10930	U7P2B2C
MOT10931	U10P2B2C
MOT10932	U15P2B2C
MOT10933	U20P2B2C
MOT10934	H25P2B2C
MOT10935	H30P2B2C
MOT10936	H40P2B2C
MOT10937	H50P2B2C
MOT10938	H60P2B2C
MOT10939	H75P2B2C
MOT10940	H100P2B2C
MOT10941	U1P2G2P
MOT10942	U32P2G2P
MOT10943	U2P2G2P
MOT10944	U3P2G2C
MOT10945	U5P2G2C
MOT10946	U7P2G2C
MOT10947	U10P2G2C
MOT10948	U15P2G2C
MOT10949	U20P2G2C
MOT10950	H25P2G2C
MOT10951	H30P2G2C
MOT10952	H40P2G2C
MOT10953	H50P2G2C
MOT10954	H60P2G2C
MOT10955	H75P2G2C
MOT10956	H100P2G2C
MOT11205	HW15EL9C2
MOT11205	HW15EL9C2
MOT11215	HW25EL9C2
MOT11215	HW25EL9C2
MOT11217	U32S2ACR
MOT11220	D150E2FS
MOT11231	HVW20EL9H
MOT11231	HVW20EL9H
MOT11274	HW2EL9H2
MOT11275	HW3EL9H2
MOT11276	HW3EL9C2
MOT11277	HW5EL9H2
MOT11278	HW5EK9H2

Cross Reference

ServiceFirst Item # to Mfg. #

ServiceFirst Item #	Mfg. #
MOT11279	HW5EL9C2
MOT11280	HW5EK9C2
MOT11281	HW5EL9G2
MOT11282	HW5EL36C2
MOT11283	HW7EL9H2
MOT11284	HE7EK9H2
MOT11285	HW7EKPC2
MOT11286	HW7EL9C2
MOT11287	HW7EL9G2
MOT11288	HW7EL36C2
MOT11289	HW10EKPH2
MOT11290	HW10EL9H2
MOT11291	HW10EK9C2
MOT11292	HW10EL9C2
MOT11293	HW10EK9G2
MOT11294	HW10EL9G2
MOT11295	HW10EL36C2
MOT11296	HW15EK9H2
MOT11297	HW15EL9H2
MOT11298	HW15EK9C2
MOT11299	HW15EL9G2
MOT11300	HW15EK9G2
MOT11301	HW15EL36C2
MOT11302	HW20EK9H2
MOT11303	HW20EL9H2
MOT11304	HW20EK9C2
MOT11305	HW20EL9C2
MOT11306	HW20EL9G2
MOT11307	HW20EK9G2
MOT11309	HW20EL36C2
MOT11310	HW25EL9H2
MOT11311	HW25EK9H2
MOT11312	HW25EK9C2
MOT11313	HW25EL9G2
MOT11314	HW25EK9G2
MOT11315	HW25EL36C2
MOT11316	HW30EL9H2
MOT11317	HW30EK9H2
MOT11318	HW30EK9C2
MOT11319	HW30EL9C2
MOT11320	HW30EL9G2
MOT11321	HW30EL36C2
MOT11322	HW40EL9H2
MOT11323	HW40EL9C2
MOT11324	HW40EK9C2
MOT11325	HW40EK9G2
MOT11326	HW40EL9G2
MOT11327	HW40EL36C2
MOT11328	HW50EK9H2
MOT11329	HW50EL9H2
MOT11330	HW50EL9C2
MOT11331	HW50EK9C2
MOT11332	HW50EL9G2
MOT11333	HW60EL9H2
MOT11334	HW60EL9C2
MOT11335	HW60EL9G2
MOT11336	HW75EL9H2
MOT11337	HW75EL9C2
MOT11338	HVW2EL9C
MOT11339	HVW2EL9G
MOT11340	HVW2EK36C
MOT11341	HVW3EL9H
MOT11342	HVW3EL9C

ServiceFirst Item #	Mfg. #
MOT11343	HVW3EL9G
MOT11279	HW5EL9C2
MOT11344	HVW3EL36C
MOT11345	HVW5EK9H
MOT11346	HVW5EL9H
MOT11347	HVW5EK9C
MOT11348	HVW5EL9C
MOT11349	HVW53L36H
MOT11350	HVW5EL36C
MOT11351	HVW7EK9H
MOT11352	HVW7EL9H
MOT11353	HVW7EK9C
MOT11354	HVW7EL9C
MOT11355	HVW7EL9G
MOT11356	HVW7EL36C
MOT11357	HVW7EK36C
MOT11358	HVW10EK9H
MOT11359	HVW10EL9H
MOT11360	HVW10EK9C
MOT11361	HVW10EL9C
MOT11362	HVW10EL9G
MOT11363	HVW10EL36H
MOT11364	HVW10EK36C
MOT11365	HVW10EL36C
MOT11366	HVW15EK9H
MOT11372	HVW15EL9H
MOT11373	HVW15EK9C
MOT11374	HVW15EL9C
MOT11375	HVW15EK9G
MOT11376	HVW15EL9G
MOT11377	HVW15EL36H
MOT11378	HVW15EL36C
MOT11379	HVW15EK36C
MOT11380	HVW20EK9H
MOT11381	HVW20EK9C
MOT11382	HVW20EL9C
MOT11383	HVW20EK9G
MOT11384	HVW20EL9G
MOT11385	HVW20EL36H
MOT11386	HVW20EK36C
MOT11387	HVW20EL36C
MOT11388	HVW25EK9H
MOT11389	HVW25EL9H
MOT11390	HVW25EK9C
MOT11391	HVW25EL9C
MOT11392	HVW25EL9G
MOT11393	HVW25EK9G
MOT11394	HVW25EL36H
MOT11395	HVW25EK36C
MOT11396	HVW25EL36C
MOT11397	HVW30EL9H
MOT11398	HVW30EK9H
MOT11399	HVW30EK9C
MOT11400	HVW30EL9C
MOT11401	HVW30EL9G
MOT11402	HVW30EL36H
MOT11403	HVW30EL36C
MOT11404	HVW40EK9H
MOT11405	HVW40EK9C
MOT11406	HVW40EL9C
MOT11407	HVW40EK9G
MOT11408	HVW40EL36H
MOT11409	HVW40EK36C

ServiceFirst Item #	Mfg. #
MOT11410	HVW40EL36C
MOT11411	HVW40EL9H
MOT11412	HVW50EK9H
MOT11413	HVW50EK9C
MOT11414	HVW50EL9H
MOT11415	HVW40EL9G
MOT11416	HVW50EL9C
MOT11417	HVW50EL9G
MOT11418	HVW50EL36H
MOT11419	HVW50EL36C
MOT11420	HVW60EL9H
MOT11421	HVW60EL9C
MOT11422	HVW60EL9G
MOT11423	HVW75EK9H
MOT11424	HVW75EL9H
MOT11425	HVW75EL9C
MOT11426	HVW75EK9C
MOT11427	HVW100EL9H
MOT11428	HVW100EL9C
MOT11448	D60E2ES
MOT11455	AR-90
MOT11517	HVW20E2H
MOT11518	D15V2B
MOT11529	T5C2K21
MOT11530	D50P3B
MOT11542	U5E1D
MOT11654	D30P3B
MOT11758	HW15E2E
MOT11759	D2C2PHZ
MOT11760	D3C2P18
MOT11764	8750
MOT11765	8747
MOT11766	8748
MOT11767	EB841
MOT11771	UJ7S2AP
MOT11786	U7P1B
MOT11803	D50E2DS
MOT11817	HVW50V2B
MOT11820	D200E2FS
MOT11833	U3E1DF
MOT11856	H125P2S
MOT11876	EE155
MOT11877	EE446
MOT11878	EE506
MOT11879	EE607
MOT11880	EE733
MOT11881	EE734
MOT11882	EE283
MOT11883	EE515
MOT11884	EE516
MOT11885	EE661
MOT11886	EE706
MOT11887	EU0332B
MOT11888	EU0502B
MOT11889	EU0752B
MOT11890	EU1002B
MOT11891	EU1502B
MOT11892	EU2002B
MOT11893	EU3002B
MOT11894	EU03
MOT11895	EU05
MOT11896	EU07
MOT11897	EU09

ServiceFirst Item #	Mfg. #
MOT11898	DJ2S2AM
MOT11899	DJ3S1AM
MOT11900	DJ3S2AM
MOT11901	DJ5S1AM
MOT11902	DJ5S2AM
MOT11903	DJ7S1AM
MOT11904	DJ7S2AM
MOT11905	DJ10S1AM
MOT11906	DJ10S2AM
MOT11907	UJ2S2AM
MOT11908	UJ3S1AM
MOT11909	UJ3S2AM
MOT11910	UJ5S1AM
MOT11911	UJ5S2AM
MOT11912	UJ7S1BFM
MOT11913	UJ7S1AM
MOT11914	UJ7S2AM
MOT11915	UJ10S1AM

Cross Reference

Mfg. # to ServiceFirst Item #

Mfg. #	ServiceFirst Item #
1	KIT02400
3	KIT02421
4	KIT02424
5	KIT02429
6	KIT02432
7	KIT02423
8	KIT02431
9	KIT02401
10	KIT02402
11	KIT02428
12	KIT02436
13	KIT02405
16	KIT02411
17	KIT02412
19	KIT02425
20	KIT02433
25	KIT02406
26	KIT02416
27	KIT02415
30	KIT02422
31	KIT02430
32	KIT02426
34	KIT02434
35	KIT02419
36	KIT02420
37	KIT02435
38	KIT02427
43	KIT02413
44	KIT02414
45	KIT02417
46	KIT02418
51	KIT02437
52	KIT02403
55	KIT02408
56	KIT02410
102	MOT06256
103	MOT06264
108	MOT06260
109	MOT06268
110	MOT06261
111	MOT06269
112	MOT06262
113	MOT06270
114	MOT06263
115	MOT06257
116	MOT06266
117	MOT06259
119	MOT06258
120	MOT06265
136	MOT06305
180	MOT06182
298	MOT06183
299	MOT06189
430	MOT06185
431	MOT06187
591	MOT06307
600	MOT06112
601	MOT06117
602	MOT06122
644	MOT06299
721	MOT06030
722	MOT06032
723	MOT06029
724	MOT06031

Mfg. #	ServiceFirst Item #
839	MOT06141
855	MOT06319
865	MOT06229
936	MOT06142
985	MOT06140
1012	MOT06318
1090	MOT01877
1124	MOT06325
1125	MOT10238
1126	MOT10239
1127	MOT06138
1142	MOT06320
1152	MOT06334
1193	MOT06172
1194	MOT06171
1204	MOT10187
1205	MOT10188
1206	MOT10189
1207	MOT10190
1208	MOT10191
1213	MOT06085
1215	MOT06081
1216	MOT06080
1221	MOT06097
1225	MOT10215
1226	MOT10216
1227	MOT10217
1228	MOT10218
1229	MOT10219
1268	MOT06107
1374	MOT01878
1390	MOT10170
1391	MOT10032
1391	MOT10032
1410	MOT06279
1444	MOT06010
1468	MOT06240
1469	MOT06241
1470	MOT06242
1471	MOT06243
1527	MOT06284
1545	MOT06280
1548	MOT06228
1553	MOT06278
1631	MOT06139
1645	MOT06297
1648	MOT06298
1673	MOT06363
1674	MOT03419
1675	MOT03438
1676	MOT01875
1678	MOT02852
1679	MOT02853
1680	MOT02854
1690	MOT10171
1691	MOT10172
1692	MOT10173
1693	MOT10174
1694	MOT10175
1695	MOT10176
1696	MOT10177
1697	MOT10178
1769	MOT06188
1786	MOT06157

Mfg. #	ServiceFirst Item #
1789	MOT06158
1790	MOT06184
1810	MOT06201
1811	MOT06202
1813	MOT06071
1814	MOT06072
1818	MOT06076
1819	MOT06077
1820	MOT10167
1821	MOT10168
1822	MOT10169
1824	MOT06086
1828	MOT10165
1859	MOT10143
1860	MOT06038
1861	MOT06040
1862	MOT06041
1863	MOT06109
1865	MOT06119
1868	MOT06042
1871	MOT06035
1872	MOT06036
1873	MOT06037
1874	MOT06039
1875	MOT10067
1876	MOT10147
1879	MOT10159
1880	MOT10145
1881	MOT10150
1882	MOT10155
1887	MOT06083
1890	MOT10149
1891	MOT10154
1892	MOT10158
1893	MOT06186
1971	MOT06110
1972	MOT06115
1973	MOT06120
1981	MOT06244
1989	MOT06285
2097	MOT06245
2166	MOT06304
2201	MOT10161
2202	MOT10162
2203	MOT10163
2204	MOT10164
2302	MOT06250
2328	MOT06291
2342	MOT06273
2423	MOT06213
2554	MOT06326
2569	MOT06230
2574	MOT06212
2686	MOT06065
2695	MOT06155
2736	MOT06340
2758	MOT06173
2759	MOT06174
2762	MOT06338
2777	MOT06339
2808	MOT10197
2887	MOT06154
2888	MOT06150
2889	MOT06145

Mfg. #	ServiceFirst Item #
2896	MOT06066
3022	MOT06175
3033	MOT06208
3034	MOT06272
3035	MOT10220
3083	MOT06248
3097	MOT06012
3133	MOT06088
3134	MOT06089
3135	MOT06090
3136	MOT06091
3183	MOT06126
3196	MOT06246
3225	MOT06282
3228	MOT06293
3251	MOT06254
3252	MOT10198
3300	MOT10231
3303	MOT06283
3320	MOT10227
3330	MOT10228
3340	MOT10229
3350	MOT10230
3360	MOT10232
3400	MOT10221
3401	MOT10222
3402	MOT10223
3404	MOT10225
3405	MOT10226
3484	MOT06311
3565	MOT06070
3566	MOT06068
3567	MOT06069
3568	MOT06067
3580	MOT06253
3640	MOT06336
3735	MOT10144
3736	MOT10148
3737	MOT10153
3738	MOT10157
3740	MOT06337
3742	MOT10160
3801	MOT06219
3802	MOT06220
3803	MOT06221
3808	MOT06225
3809	MOT06227
3813	MOT06232
3814	MOT06234
3815	MOT06236
3846	MOT06017
3847	MOT06020
3848	MOT06023
3849	MOT06022
3851	MOT06002
3852	MOT06009
3863	MOT06178
3864	MOT06179
3865	MOT06180
3958	MOT06167
4114	MOT06166
4115	MOT06168
4242	MOT06190
4253	MOT06162

Cross Reference

Mfg. # to ServiceFirst Item #

Mfg. #	ServiceFirst Item #
4293	MOT06169
4811	MOT06018
4855	MOT06200
4856	MOT06198
4960	MOT06021
4961	MOT06019
5107	MOT06292
5108	MOT06322
5149	MOT06207
5345	MOT06026
5401	MOT06288
5450	MOT10245
5451	MOT10242
5453	MOT10244
5454	MOT06312
5455	MOT06313
5456	MOT06314
5457	MOT06315
5459	MOT10241
5460	MOT09985
5461	MOT09986
5462	MOT09987
5463	MOT10243
5470	MOT10274
5471	MOT10275
5489	MOT06063
5824	MOT06087
5866	MOT06255
6124	MOT06286
6127	MOT06287
6128	MOT10233
6129	MOT10234
6130	MOT10235
6326	MOT10184
6328	MOT10185
6330	MOT10186
6603	MOT06064
6727	MOT06061
6764	MOT10200
6765	MOT10210
6766	MOT10203
6767	MOT10208
6768	MOT10202
6769	MOT10205
6770	MOT10213
6771	MOT10206
6795	MOT10211
6796	MOT10214
6838	MOT06060
6873	MOT06125
6880	MOT06007
7024	MOT06328
7025	MOT06024
7040	MOT06027
7041	MOT06028
7094	MOT10199
7095	MOT10201
7096	MOT10204
7097	MOT10207
7098	MOT10209
7099	MOT10212
7232	MOT10237
7385	MOT10236
7475	MOT06062

Mfg. #	ServiceFirst Item #
7994	MOT06300
8000	MOT06144
8008	MOT06331
8009	MOT06332
8042	MOT06025
8052	MOT10240
8054	MOT06302
8075	MOT06274
8100	MOT06149
8200	MOT06153
8231	MOT06271
8301	MOT06014
8302	MOT06013
8348	MOT06015
8412	MOT06151
8537	MOT06333
8558	MOT06324
8661	MOT06000
8665	MOT06011
8666	MOT06003
8667	MOT06006
8669	MOT06043
8670	MOT06045
8671	MOT06047
8673	MOT10142
8674	MOT10146
8675	MOT10151
8725	MOT06092
8726	MOT06094
8747	MOT11765
8748	MOT11766
8750	MOT11764
8891	MOT06105
8893	MOT06113
8899	MOT06121
8904	MOT09415
8905	MOT09416
8906	MOT10179
8907	MOT10180
9034	MOT06195
9035	MOT06196
9036	MOT06197
9393	MOT06016
9735	MOT06316
9993	MOT06303
HW50EL9C2	MOT11330
3187C	MOT10196
4293H	MOT06170
5792C	MOT10192
5793C	MOT10193
5794C	MOT10194
5795C	MOT10195
840CV	MOT10247
841CV	MOT10248
AR-90	MOT11455
D100E2E	MOT10604
D100E2E2C	MOT10652
D100E2G	MOT10620
D100E2G2C	MOT10668
D100E2H2P	MOT10636
D100E2HP	MOT10588
D100P2B	MOT10700
D100P2B2C	MOT10748
D100P2G	MOT10716

Mfg. #	ServiceFirst Item #
D100P2G2C	MOT10764
D100P2H2P	MOT10732
D100P2HP	MOT10684
D10E2D	MOT10595
D10E2D2	MOT10643
D10E2G	MOT10611
D10E2G2C	MOT10659
D10E2H	MOT10579
D10E2H2C	MOT10627
D10P2B	MOT10691
D10P2B2C	MOT10739
D10P2G	MOT10707
D10P2G2C	MOT10755
D10P2H	MOT10675
D10P2H2C	MOT10723
D150E2FS	MOT11220
D15E2D	MOT10596
D15E2D2	MOT10644
D15E2G	MOT10612
D15E2G2C	MOT10660
D15E2H	MOT10580
D15E2H2C	MOT10628
D15P2B	MOT10692
D15P2B2C	MOT10740
D15P2G	MOT10708
D15P2G2C	MOT10756
D15P2H	MOT10676
D15P2H2C	MOT10724
D15V2B	MOT11518
D1E2D	MOT10589
D1E2D2	MOT10637
D1E2G	MOT10605
D1E2G2P	MOT10653
D1E2H	MOT10573
D1E2H2P	MOT10621
D1P2B	MOT10685
D1P2B2P	MOT10733
D1P2G	MOT10701
D1P2G2P	MOT10749
D1P2H	MOT10669
D1P2H2P	MOT10717
D200E2FS	MOT11820
D20E2D	MOT10597
D20E2D2	MOT10645
D20E2G	MOT10613
D20E2G2C	MOT10661
D20E2H	MOT10581
D20E2H2C	MOT10629
D20P2B	MOT10693
D20P2B2C	MOT10741
D20P2G	MOT10709
D20P2G2C	MOT10757
D20P2H	MOT10677
D20P2H2C	MOT10725
D25E2D	MOT10598
D25E2D2C	MOT10646
D25E2G	MOT10614
D25E2G2C	MOT10662
D25E2H	MOT10582
D25E2H2C	MOT10630
D25P2B	MOT10694
D25P2B2C	MOT10742
D25P2G	MOT10710
D25P2G2C	MOT10758

Mfg. #	ServiceFirst Item #
D25P2H	MOT10678
D25P2H2C	MOT10726
D2C2PHZ	MOT11759
D2E2D	MOT10591
D2E2D2P	MOT10639
D2E2G	MOT10607
D2E2G2P	MOT10655
D2E2H	MOT10575
D2E2H2P	MOT10623
D2P2B	MOT10687
D2P2B2	MOT10735
D2P2G	MOT10703
D2P2G2P	MOT10751
D2P2H	MOT10671
D2P2H2	MOT10719
D30E2D	MOT10599
D30E2D2C	MOT10647
D30E2G	MOT10615
D30E2G2C	MOT10663
D30E2H	MOT10583
D30E2H2C	MOT10631
D30P2B	MOT10695
D30P2B2C	MOT10743
D30P2G	MOT10711
D30P2G2C	MOT10759
D30P2H2P	MOT10727
D30P2HP	MOT10679
D30P3B	MOT11654
D32E2D	MOT10590
D32E2D2	MOT10638
D32E2G	MOT10606
D32E2G2P	MOT10654
D32E2H	MOT10574
D32E2H2P	MOT10622
D32P2B	MOT10686
D32P2B2	MOT10734
D32P2G	MOT10702
D32P2G2P	MOT10750
D32P2H	MOT10670
D32P2H2P	MOT10718
D3C2P18	MOT11760
D3E2D	MOT10592
D3E2D2	MOT10640
D3E2G	MOT10608
D3E2G2C	MOT10656
D3E2H	MOT10576
D3P2B	MOT10688
D3P2B2C	MOT10736
D3P2G	MOT10704
D3P2G2C	MOT10752
D3P2H	MOT10672
D3P2H2C	MOT10720
D3S2H2	MOT10624
D40E2E	MOT10600
D40E2E2C	MOT10648
D40E2G	MOT10616
D40E2G2C	MOT10664
D40E2H	MOT10584
D40E2H2C	MOT10632
D40P2B	MOT10696
D40P2B2C	MOT10744
D40P2G	MOT10712
D40P2G2C	MOT10760
D40P2H	MOT10680

Cross Reference

Mfg. # to ServiceFirst Item #

Mfg. #	ServiceFirst Item #
D40P2H2C	MOT10728
D50E2DS	MOT11803
D50E2E	MOT10601
D50E2E2C	MOT10649
D50E2G	MOT10617
D50E2G2C	MOT10665
D50E2H	MOT10585
D50E2H2C	MOT10633
D50P2B	MOT10697
D50P2B2C	MOT10745
D50P2G	MOT10713
D50P2G2C	MOT10761
D50P2H2P	MOT10729
D50P2HP	MOT10681
D50P3B	MOT11530
D5E2D	MOT10593
D5E2D2	MOT10641
D5E2G	MOT10609
D5E2G2C	MOT10657
D5E2H	MOT10577
D5P2B	MOT10689
D5P2B2C	MOT10737
D5P2G	MOT10705
D5P2G2C	MOT10753
D5P2H	MOT10673
D5P2H2C	MOT10721
D5S2H2	MOT10625
D60E2E	MOT10602
D60E2E2C	MOT10650
D60E2ES	MOT11448
D60E2G	MOT10618
D60E2G2C	MOT10666
D60E2H2P	MOT10634
D60E2HP	MOT10586
D60P2B	MOT10698
D60P2B2C	MOT10746
D60P2G	MOT10714
D60P2G2C	MOT10762
D60P2H2P	MOT10730
D60P2HP	MOT10682
D75E2E	MOT10603
D75E2E2C	MOT10651
D75E2G	MOT10619
D75E2G2C	MOT10667
D75E2H2P	MOT10635
D75E2HP	MOT10587
D75P2B	MOT10699
D75P2B2C	MOT10747
D75P2G	MOT10715
D75P2G2C	MOT10763
D75P2H2P	MOT10731
D75P2HP	MOT10683
D7E2D	MOT10594
D7E2D2	MOT10642
D7E2G	MOT10610
D7E2G2C	MOT10658
D7E2H	MOT10578
D7E2H2C	MOT10626
D7P2B	MOT10690
D7P2B2C	MOT10738
D7P2G	MOT10706
D7P2G2C	MOT10754
D7P2H	MOT10674
D7P2H2C	MOT10722

Mfg. #	ServiceFirst Item #
DJ10S1AM	MOT11905
DJ10S2AM	MOT11906
DJ2S2AM	MOT11898
DJ3S1AM	MOT11899
DJ3S2AM	MOT11900
DJ5S1AM	MOT11901
DJ5S2AM	MOT11902
DJ7S1AM	MOT11903
DJ7S2AM	MOT11904
EB841	MOT11767
EE155	MOT11876
EE283	MOT11882
EE446	MOT11877
EE506	MOT11878
EE515	MOT11883
EE516	MOT11884
EE607	MOT11879
EE661	MOT11885
EE706	MOT11886
EE733	MOT11880
EE734	MOT11881
EU03	MOT11894
EU0332B	MOT11887
EU05	MOT11895
EU0502B	MOT11888
EU07	MOT11896
EU0752B	MOT11889
EU09	MOT11897
EU1002B	MOT11890
EU1502B	MOT11891
EU2002B	MOT11892
EU3002B	MOT11893
H100E2E	MOT10796
H100E2E2C	MOT10844
H100E2G	MOT10812
H100E2G2C	MOT10860
H100E2H	MOT10780
H100E2H2C	MOT10828
H100P2B	MOT10892
H100P2B2C	MOT10940
H100P2G	MOT10908
H100P2G2C	MOT10956
H100P2H2P	MOT10924
H100P2HP	MOT10876
H125P2S	MOT11856
H25P2B	MOT10886
H25P2B2C	MOT10934
H25P2G	MOT10902
H25P2G2C	MOT10950
H30P2B	MOT10887
H30P2B2C	MOT10935
H30P2G	MOT10903
H30P2G2C	MOT10951
H40E2E	MOT10792
H40E2E2C	MOT10840
H40E2G	MOT10808
H40E2G2C	MOT10856
H40E2H	MOT10776
H40E2H2C	MOT10824
H40P2B	MOT10888
H40P2B2C	MOT10936
H40P2G	MOT10904
H40P2G2C	MOT10952
H40P2H2P	MOT10920

Mfg. #	ServiceFirst Item #
H40P2HP	MOT10872
H50E2E	MOT10793
H50E2E2C	MOT10841
H50E2G	MOT10809
H50E2G2C	MOT10857
H50E2H	MOT10777
H50E2H2C	MOT10825
H50P2B	MOT10889
H50P2B2C	MOT10937
H50P2G	MOT10905
H50P2G2C	MOT10953
H50P2H2P	MOT10921
H50P2HP	MOT10873
H60E2E	MOT10794
H60E2E2C	MOT10842
H60E2G	MOT10810
H60E2G2C	MOT10858
H60E2H	MOT10778
H60E2H2C	MOT10826
H60P2B	MOT10890
H60P2B2C	MOT10938
H60P2G	MOT10906
H60P2G2C	MOT10954
H60P2H2P	MOT10922
H60P2HP	MOT10874
H75E2E	MOT10795
H75E2E2C	MOT10843
H75E2G	MOT10811
H75E2G2C	MOT10859
H75E2H	MOT10779
H75E2H2C	MOT10827
H75P2B	MOT10891
H75P2B2C	MOT10939
H75P2G	MOT10907
H75P2G2C	MOT10955
H75P2H2P	MOT10923
H75P2HP	MOT10875
HE7EK9H2	MOT11284
HVW100EL9C	MOT11428
HVW100EL9H	MOT11427
HVW10EK36C	MOT11364
HVW10EK9C	MOT11360
HVW10EK9H	MOT11358
HVW10EL36C	MOT11365
HVW10EL36H	MOT11363
HVW10EL9C	MOT11361
HVW10EL9G	MOT11362
HVW10EL9H	MOT11359
HVW15EK36C	MOT11379
HVW15EK9C	MOT11373
HVW15EK9G	MOT11375
HVW15EK9H	MOT11366
HVW15EL36C	MOT11378
HVW15EL36H	MOT11377
HVW15EL9C	MOT11374
HVW15EL9G	MOT11376
HVW15EL9H	MOT11372
HVW20E2H	MOT11517
HVW20EK36C	MOT11386
HVW20EK9C	MOT11381
HVW20EK9G	MOT11383
HVW20EK9H	MOT11380
HVW20EL36C	MOT11387
HVW20EL36H	MOT11385

Mfg. #	ServiceFirst Item #
HVW20EL9C	MOT11382
HVW20EL9G	MOT11384
HVW20EL9H	MOT11231
HVW20EL9H	MOT11231
HVW25EK36C	MOT11395
HVW25EK9C	MOT11390
HVW25EK9G	MOT11393
HVW25EK9H	MOT11388
HVW25EL36C	MOT11396
HVW25EL36H	MOT11394
HVW25EL9C	MOT11391
HVW25EL9G	MOT11392
HVW25EL9H	MOT11389
HVW2EK36C	MOT11340
HVW2EL9C	MOT11338
HVW2EL9G	MOT11339
HVW30EK9C	MOT11399
HVW30EK9H	MOT11398
HVW30EL36C	MOT11403
HVW30EL36H	MOT11402
HVW30EL9C	MOT11400
HVW30EL9G	MOT11401
HVW30EL9H	MOT11397
HVW3EL36C	MOT11344
HVW3EL9C	MOT11342
HVW3EL9G	MOT11343
HVW3EL9H	MOT11341
HVW40EK36C	MOT11409
HVW40EK9C	MOT11405
HVW40EK9G	MOT11407
HVW40EK9H	MOT11404
HVW40EL36C	MOT11410
HVW40EL36H	MOT11408
HVW40EL9C	MOT11406
HVW40EL9G	MOT11415
HVW40EL9H	MOT11411
HVW50EK9C	MOT11413
HVW50EK9H	MOT11412
HVW50EL36C	MOT11419
HVW50EL36H	MOT11418
HVW50EL9C	MOT11416
HVW50EL9G	MOT11417
HVW50EL9H	MOT11414
HVW50V2B	MOT11817
HVW53L36H	MOT11349
HVW5EK9C	MOT11347
HVW5EK9H	MOT11345
HVW5EL36C	MOT11350
HVW5EL9C	MOT11348
HVW5EL9H	MOT11346
HVW60EL9C	MOT11421
HVW60EL9G	MOT11422
HVW60EL9H	MOT11420
HVW75EK9C	MOT11426
HVW75EK9H	MOT11423
HVW75EL9C	MOT11425
HVW75EL9H	MOT11424
HVW7EK36C	MOT11357
HVW7EK9C	MOT11353
HVW7EK9H	MOT11351
HVW7EL36C	MOT11356
HVW7EL9C	MOT11354
HVW7EL9G	MOT11355
HVW7EL9H	MOT11352

Cross Reference

Mfg. # to ServiceFirst Item #

Mfg. #	ServiceFirst Item #
HW10EK9C2	MOT11291
HW10EK9G2	MOT11293
HW10EKPH2	MOT11289
HW10EL36C2	MOT11295
HW10EL9C2	MOT11292
HW10EL9G2	MOT11294
HW10EL9H2	MOT11290
HW15E2E	MOT11758
HW15EK9C2	MOT11298
HW15EK9G2	MOT11300
HW15EK9H2	MOT11296
HW15EL36C2	MOT11301
HW15EL9C2	MOT11205
HW15EL9C2	MOT11205
HW15EL9G2	MOT11299
HW15EL9H2	MOT11297
HW20EK9C2	MOT11304
HW20EK9G2	MOT11307
HW20EK9H2	MOT11302
HW20EL36C2	MOT11309
HW20EL9C2	MOT11305
HW20EL9G2	MOT11306
HW20EL9H2	MOT11303
HW25EK9C2	MOT11312
HW25EK9G2	MOT11314
HW25EK9H2	MOT11311
HW25EL36C2	MOT11315
HW25EL9C2	MOT11215
HW25EL9C2	MOT11215
HW25EL9G2	MOT11313
HW25EL9H2	MOT11310
HW2EL9H2	MOT11274
HW30EK9C2	MOT11318
HW30EK9H2	MOT11317
HW30EL36C2	MOT11321
HW30EL9C2	MOT11319
HW30EL9G2	MOT11320
HW30EL9H2	MOT11316
HW3EL9C2	MOT11276
HW3EL9H2	MOT11275
HW40EK9C2	MOT11324
HW40EK9G2	MOT11325
HW40EL36C2	MOT11327
HW40EL9C2	MOT11323
HW40EL9G2	MOT11326
HW40EL9H2	MOT11322
HW50EK9C2	MOT11331
HW50EK9H2	MOT11328
HW50EL9G2	MOT11332
HW50EL9H2	MOT11329
HW5EK9C2	MOT11280
HW5EK9H2	MOT11278
HW5EL36C2	MOT11282
HW5EL9C2	MOT11279
HW5EL9G2	MOT11281
HW5EL9H2	MOT11277
HW60EL9C2	MOT11334
HW60EL9G2	MOT11335
HW60EL9H2	MOT11333
HW75EL9C2	MOT11337
HW75EL9H2	MOT11336
HW7EKPC2	MOT11285
HW7EL36C2	MOT11288

Mfg. #	ServiceFirst Item #
HW7EL9C2	MOT11286
HW7EL9G2	MOT11287
HW7EL9H2	MOT11283
T5C2K21	MOT11529
U10E2D	MOT10787
U10E2D2C	MOT10835
U10E2G	MOT10803
U10E2G2C	MOT10851
U10E2H	MOT10771
U10E2H2C	MOT10819
U10P2B	MOT10883
U10P2B2C	MOT10931
U10P2G	MOT10899
U10P2G2C	MOT10947
U10P2H2P	MOT10915
U10P2HP	MOT10867
U15E2D	MOT10788
U15E2D2C	MOT10836
U15E2G	MOT10804
U15E2G2C	MOT10852
U15E2H	MOT10772
U15E2H2C	MOT10820
U15P2B	MOT10884
U15P2B2C	MOT10932
U15P2G	MOT10900
U15P2G2C	MOT10948
U15P2H2P	MOT10916
U15P2HP	MOT10868
U1E2D	MOT10781
U1E2D2P	MOT10829
U1E2G	MOT10797
U1E2G2P	MOT10845
U1E2H	MOT10765
U1E2H2P	MOT10813
U1P2B	MOT10877
U1P2B2P	MOT10925
U1P2G	MOT10893
U1P2G2P	MOT10941
U1P2H2P	MOT10909
U1P2HP	MOT10861
U20E2D	MOT10789
U20E2D2C	MOT10837
U20E2G	MOT10805
U20E2G2C	MOT10853
U20E2H	MOT10773
U20E2H2C	MOT10821
U20P2B	MOT10885
U20P2B2C	MOT10933
U20P2G	MOT10901
U20P2G2C	MOT10949
U20P2H2P	MOT10917
U20P2HP	MOT10869
U25E2D	MOT10790
U25E2D2C	MOT10838
U25E2G	MOT10806
U25E2G2C	MOT10854
U25E2H	MOT10774
U25E2H2C	MOT10822
U25P2H2P	MOT10918
U25P2HP	MOT10870
U2E2D	MOT10783
U2E2D2P	MOT10831
U2E2G	MOT10799

Mfg. #	ServiceFirst Item #
U2E2G2P	MOT10847
U2E2H	MOT10767
U2E2H2P	MOT10815
U2P2B	MOT10879
U2P2B2P	MOT10927
U2P2G	MOT10895
U2P2G2P	MOT10943
U2P2H2P	MOT10911
U2P2HP	MOT10863
U30E2D	MOT10791
U30E2D2C	MOT10839
U30E2G	MOT10807
U30E2G2C	MOT10855
U30E2H	MOT10775
U30E2H2C	MOT10823
U30P2H2P	MOT10919
U30P2HP	MOT10871
U32E2D	MOT10782
U32E2D2P	MOT10830
U32E2G	MOT10798
U32E2G2P	MOT10846
U32E2H	MOT10766
U32E2H2P	MOT10814
U32P2B	MOT10878
U32P2B2P	MOT10926
U32P2G	MOT10894
U32P2G2P	MOT10942
U32P2H2P	MOT10910
U32P2HP	MOT10862
U32S2ACR	MOT11217
U3E1DF	MOT11833
U3E2D	MOT10784
U3E2D2C	MOT10832
U3E2G	MOT10800
U3E2G2C	MOT10848
U3E2H	MOT10768
U3E2H2C	MOT10816
U3P2B	MOT10880
U3P2B2C	MOT10928
U3P2G	MOT10896
U3P2G2C	MOT10944
U3P2H2P	MOT10912
U3P2HP	MOT10864
U5E1D	MOT11542
U5E2D	MOT10785
U5E2D2C	MOT10833
U5E2G	MOT10801
U5E2G2C	MOT10849
U5E2H	MOT10769
U5E2H2C	MOT10817
U5P2B	MOT10881
U5P2B2C	MOT10929
U5P2G	MOT10897
U5P2G2C	MOT10945
U5P2H2P	MOT10913
U5P2HP	MOT10865
U7E2D	MOT10786
U7E2D2C	MOT10834
U7E2G	MOT10802
U7E2G2C	MOT10850
U7E2H	MOT10770
U7E2H2C	MOT10818
U7P1B	MOT11786

Mfg. #	ServiceFirst Item #
U7P2B	MOT10882
U7P2B2C	MOT10930
U7P2G	MOT10898
U7P2G2C	MOT10946
U7P2H2P	MOT10914
U7P2HP	MOT10866
UJ10S1AM	MOT11915
UJ2S2AM	MOT11907
UJ3S1AM	MOT11908
UJ3S2AM	MOT11909
UJ5S1AM	MOT11910
UJ5S2AM	MOT11911
UJ7S1AM	MOT11913
UJ7S1BFM	MOT11912
UJ7S2AM	MOT11914
UJ7S2AP	MOT11771

Literature Order Number	RSP-PRC011-EN
Filing Hierarchy	Service Products/Motors
Date	July 2006
Supersedes	RSP-PRC011-EN 0501
Stocking Location	La Crosse

Trane has a policy of continuous product and product data improvement and reserves the right to change design and specifications without notice.