White Paper | December 2011

radisys®

Resource Management at the WCDMA HNB

Overview

Resource management is a complex topic that has hooks and dependencies on a number of metrics that are observable at the FAP. Generally, 3gPP groups resource management into a single topic, namely, Radio Resource Management although specific algorithms are not defined within the technical specifications. Hence, it is an implementation choice to choose the schemes that can be applied in stages and/or in parallel at the FAP to ensure satisfactory operation. The following schemes are just a few that are at the FAP's disposal.

- User count limit, Radio Bearer limit, Wideband power based limit, Uplink Power/Interference management and Backhaul Quality of service for Egress traffic.

CONTENTS

Figure 1 shows the typical trigger points for resource management. The next section shows the architectural view of resource management with respect to the triggers shown above. Variations and optimizations to this are possible and are allowed so long as complexity can be addressed.

Architectural View of RRM

The following few sections describe the top level view of how Resource management is enforced at the HNB.

Radio Interface

Figure 2 shows the triggers that are to be set in the FAP with respect to call admission control. The aim of RRM is to make sure that the minimum requirements set are met and to reject a new connection request that cannot guarantee the Quality of Service for existing active connections. The flow in this figure shows what shall be done from the HNB perspective to accommodate an incoming connection from the radio interface. Closed access control, priority handling (such as Emergency calls), Rate adaptation by downgrading existing "low priority" bearers are just some of the tasks that can be effectively combined. If the HNB cannot accept the incoming connection in spite of the resource manager's best efforts, the request is rejected with an appropriate cause.

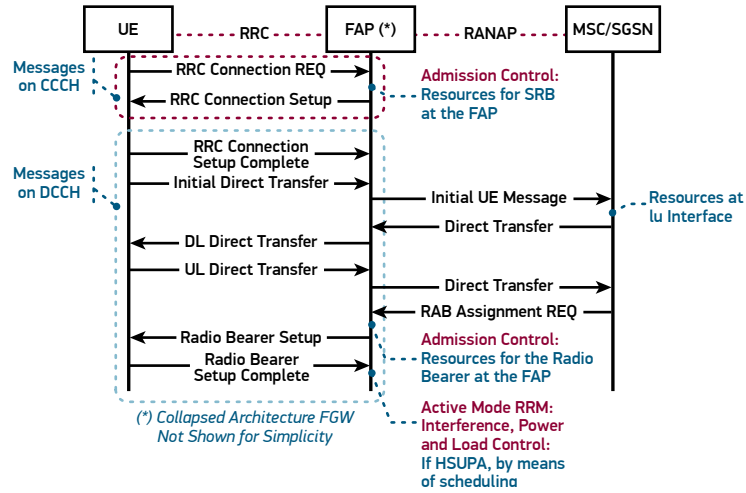

Figure 1.

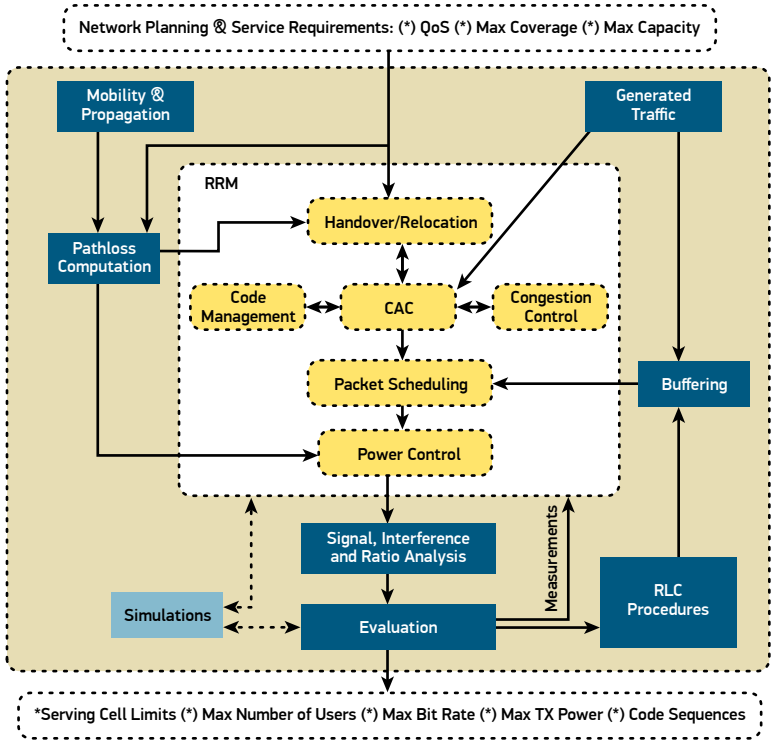

Figure 2.

Access Bearers

A request for radio resource from the UE is complete only when the core network has reserved RAB resources at the Iu interface. The RAB assignment primitive indicates service and quality requirements to sustain the connection. If at this point, the HNB cannot ascertain that physical resources can be satisfactorily assigned to the UE, then it shall perform resource management. If the RAB assignment pertains to a higher priority connection, rate adaptation or termination (release) of an existing lower priority connection may be triggered.

In addition to this, OVSF code management, buffer management and backhaul QoS calculations shall be handled prior to accepting this connection.

Active Mode Resource Management

The third component of resource management is perennial maintenance. This aspect of RRM derives from planned metrics from the network or cell perspective. For example, a defined coverage, capacity, load, minimum quality of service, guaranteed bit rates etc. are metrics that could be dimensioned by the operator. To cater for this, the resource manager may have to look into parallel methods in active mode to sustain the connections at dimensioned levels. Simulations would provide reliable mechanisms to validate proposed algorithms and the results are reflected in to the resource manager.

User Count and Radio Bearer Limits

This algorithm takes a very simple approach in which the admission criterion is solely based on the total number of users that can be accommodated within the system. This is, normally, the default method that would be enforced in any multi-user system. In a system with *'N'* users active, user *'N+1'* will be admitted if the resulting total is less than or equal to the "maximum" dimensioned for the FAP.

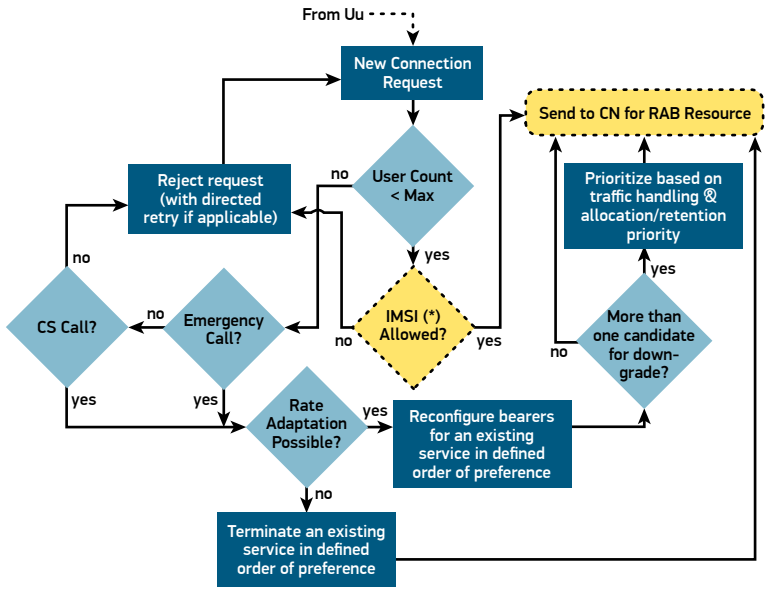

Figure 3.

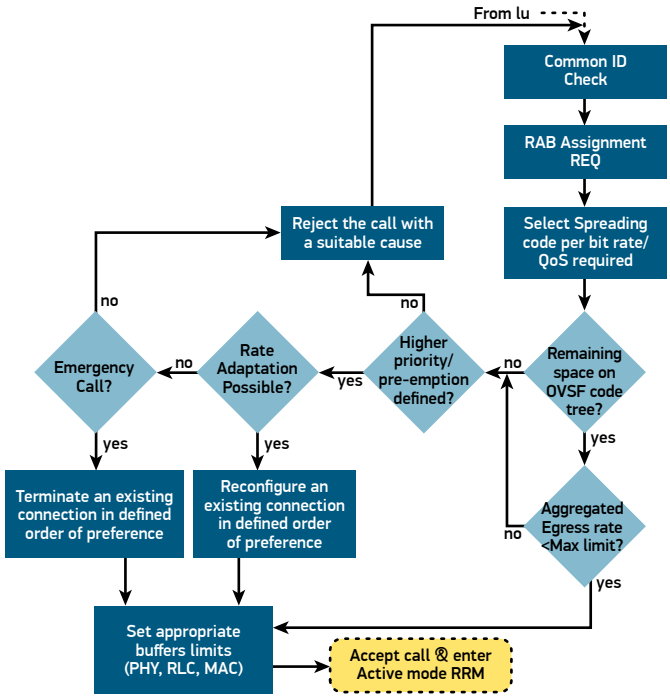

Figure 4.

Wide Band Power Based Limits

The received power at the HNB from all the UE within the cell and also from the neighboring cells is treated as the wide band received power. The system maintains a threshold value both for uplink and downlink for accepting a new call.

- *Uplink* A new call is accepted only when the new total interference (Interference Total_old + Increase in interference) is less than the threshold value set for the FAP. If the new resulting total interference caused by the new call exceeds the threshold value it should be blocked.
- *Downlink* In the downlink the same strategy is used as in uplink but in this case the considering parameter is transmission power. If the new total downlink transmission power (Power Total_old + Increase in power) does not exceed the threshold power value set for the cell, then the call is admitted. The power increase is estimated by the initial power. The initial power depends on the distance between the UE and HNB and is determined/estimated by the open loop power control.

Quality of Service

Dynamic call admission is done by the HNB on both the uplink and downlink at each RAB assignment request from the core network. Each RAB is configured with an average and a peak data rate to derive the required transport bandwidth before admitting the RAB. The required transport bandwidth is configured to use the "peak" for a CS RAB and the "average" for a PS RAB. Within the scheduler, there is configurable number of queues. The queues may be grouped into a maximum of 2 traffic profiles in order to offer differentiated services. This is accomplished by setting the DSCP/TOS field in the IP header on the egress. It shall be possible to set the TOS field individually per queue or per traffic profile.

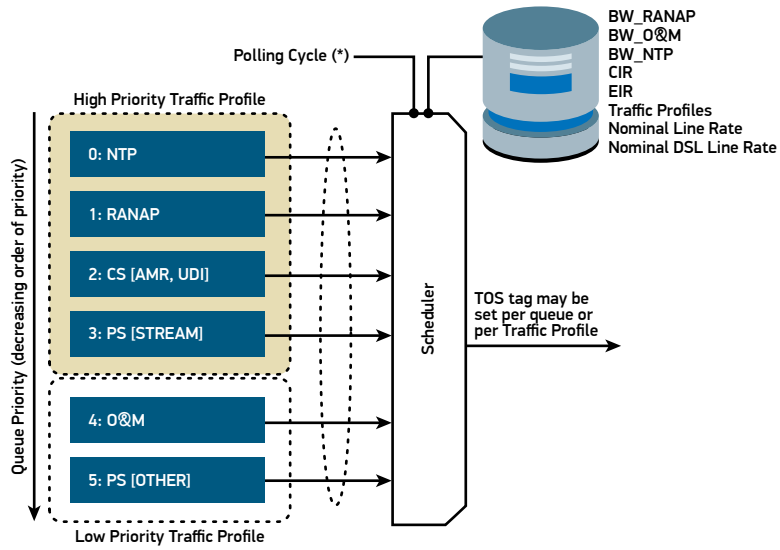

(*) Polling cycle is not configurable through O&M

Figure 5.

Each queue can be configured as a FIFO or a band-limited token bucket. The scheduler implements strict priority handling. The number of queues in the scheduler is configurable via O&M. The backhaul traffic can be classified based on class of service or priority that is pre-defined. An example implementation is shown in the figure below. In the figure below, there are six child queues numbered 0 to 5 and they indicate priorities in decreasing order, 0 being the highest. At the top of a scheduled polling cycle, de-queuing occurs from the lowest numbered (highest priority) child queue that has a packet.

In Figure 5, the database on the top shows the elements that are configurable via O&M so long as backhaul QoS is concerned. The polling cycle within the scheduler is not exposed outside of the FAP and is not configurable via O&M. If within a polling cycle, there is no data to service for a higher priority queue, the scheduled period could be offered to the next highest priority queue.

Glossary

FAP: Femto Access Point

HNB: Home NodeB [3gPP term for FAP]

FAP-GW/FGW: FAP Gateway

HNB-GW: HNB Gateway [3gPP term for FAP-GW]

HMS: HNB Management System [3gPP term for ACS]

RRM: Radio Resource Management

CAC: Call Admission Control

Corporate Headquarters
5435 NE Dawson Creek Drive
Hillsboro, OR 97124 USA
503-615-1100 | Fax 503-615-1121
Toll-Free: 800-950-0044
www.radisys.com | info@radisys.com