Results from CW stabilized link timing distribution at LCLS

Russell Wilcox
Gang Huang
Larry Doolittle
John Byrd
John Staples

Application and concepts

- Requirement: synchronize multiple lasers to a reference signal
  - Original spec was 100fs RMS maintained over 8 hours
- Emphasis on reliability, as downtime is costly

- Concept: synchronize lasers to RF signal transmitted on fiber
  - Well-established high harmonic laser locking technique
    - We demonstrated 15fs synchronization of two lasers at 2.5GHz
  - RF-over-fiber is cable TV technology
    - All fiber telecom parts for reliability and cost
    - Standard telecom fiber
  - Uses LBL-developed low noise digital phase detector
    - 0.01 degree phase sensitivity (10fs at 3GHz)
- Optical interferometer to senses fiber delay change
  - High temporal resolution
  - Low noise heterodyne interferometer
- Interferometer reports to digital phase detector, which then applies correction to received RF
  - No mechanical time delay adjusters

Environmental perturbations of fiber, cable, laser

Material	Coeff. of delay per deg C	Δ delay for 1m, 1 deg.C
Steel	15 x 10^-6	50fs
Aluminum	22 x 10^-6	72fs
Fiber	8 x 10^-6	40fs
Coax, teflon	-85 x 10^-6	-425fs
Coax, air heliax	-10 x 10^-6	-50fs
Air (thermal)	-3 x 10^-6	-10fs
Air (pressure)	2 x 10^-6 / 10 millibars	7fs / 10mbar
Air (humidity)	4 x 10^-6 / 10%RH	13fs / 10%RH

- thermal coefficient of index is the main driver for fiber

Schematic of one link

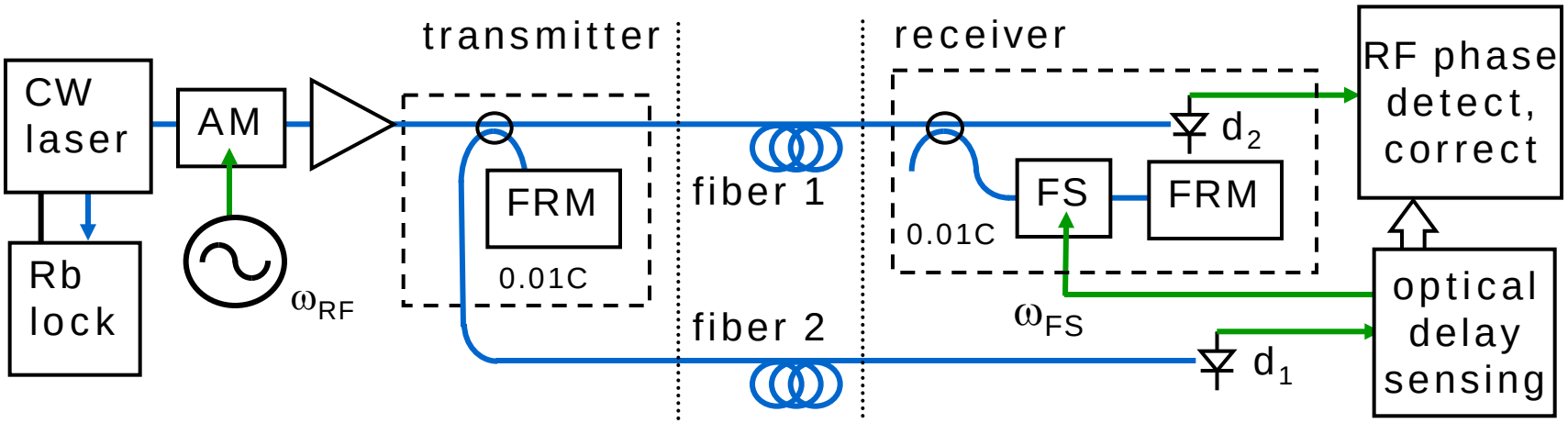

- FRM is Faraday rotator mirror (ends of the Michelson interferometer)
- FS is optical frequency shifter
- CW laser is absolutely stabilized
- Transmitted RF frequency is 2856 MHz
- Detection of fringes is at receiver
- Signal paths not actively stabilized are temperature controlled

Schematic of one link

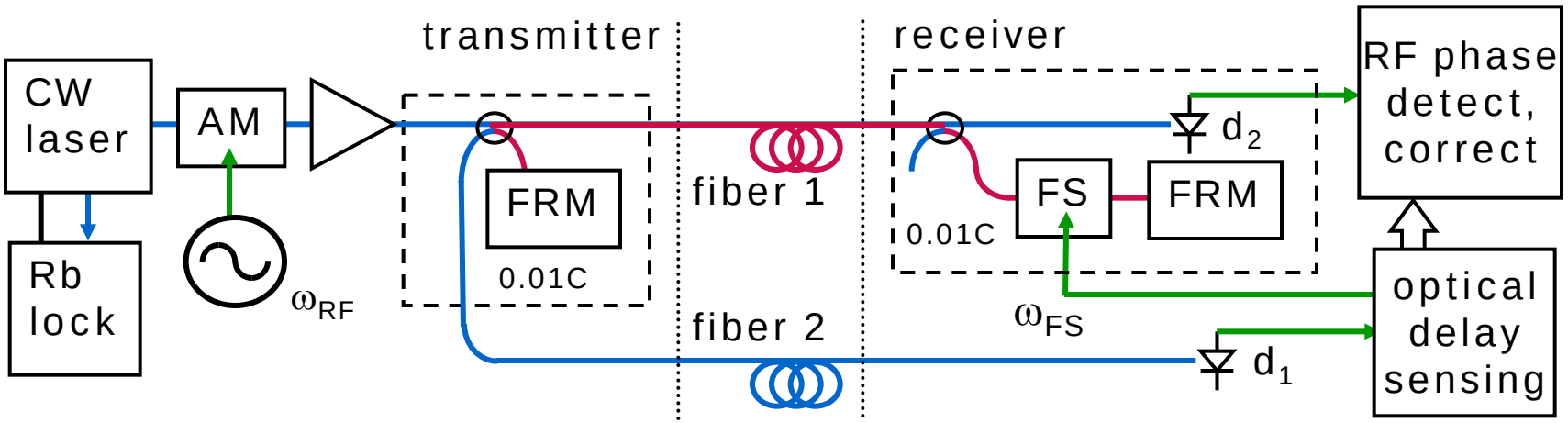

- FRM is Faraday rotator mirror (ends of the Michelson interferometer)
- FS is optical frequency shifter
- CW laser is absolutely stabilized
- Transmitted RF frequency is 2856 MHz
- Detection of fringes is at receiver
- Signal paths not actively stabilized are temperature controlled

Schematic of one link

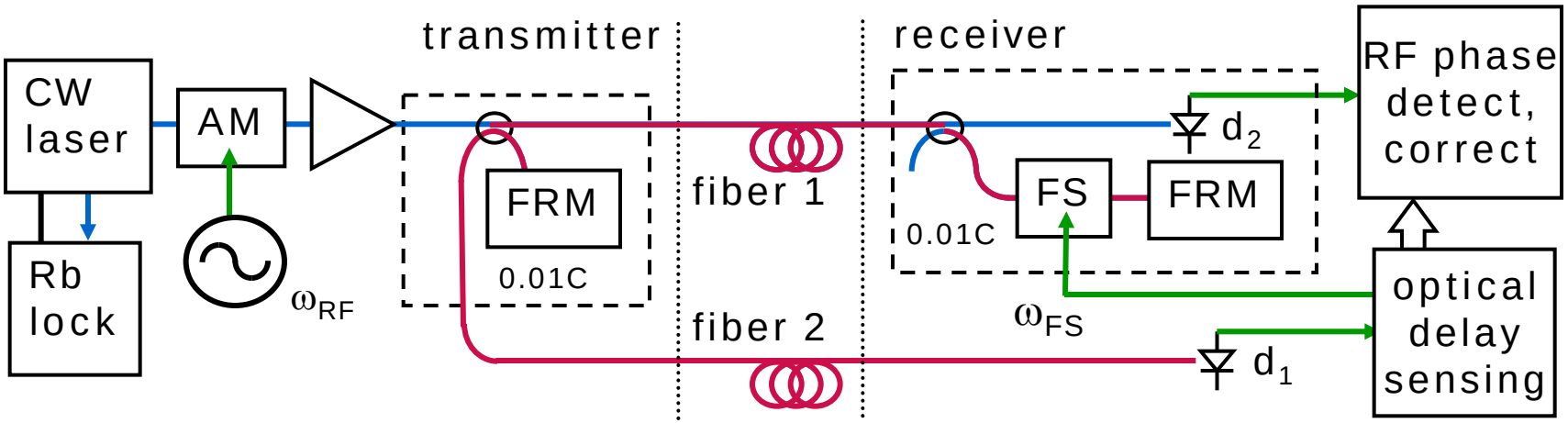

- FRM is Faraday rotator mirror (ends of the Michelson interferometer)
- FS is optical frequency shifter
- CW laser is absolutely stabilized
- Transmitted RF frequency is 2856 MHz
- Detection of fringes is at receiver
- Signal paths not actively stabilized are temperature controlled

Expansion to multiple channels

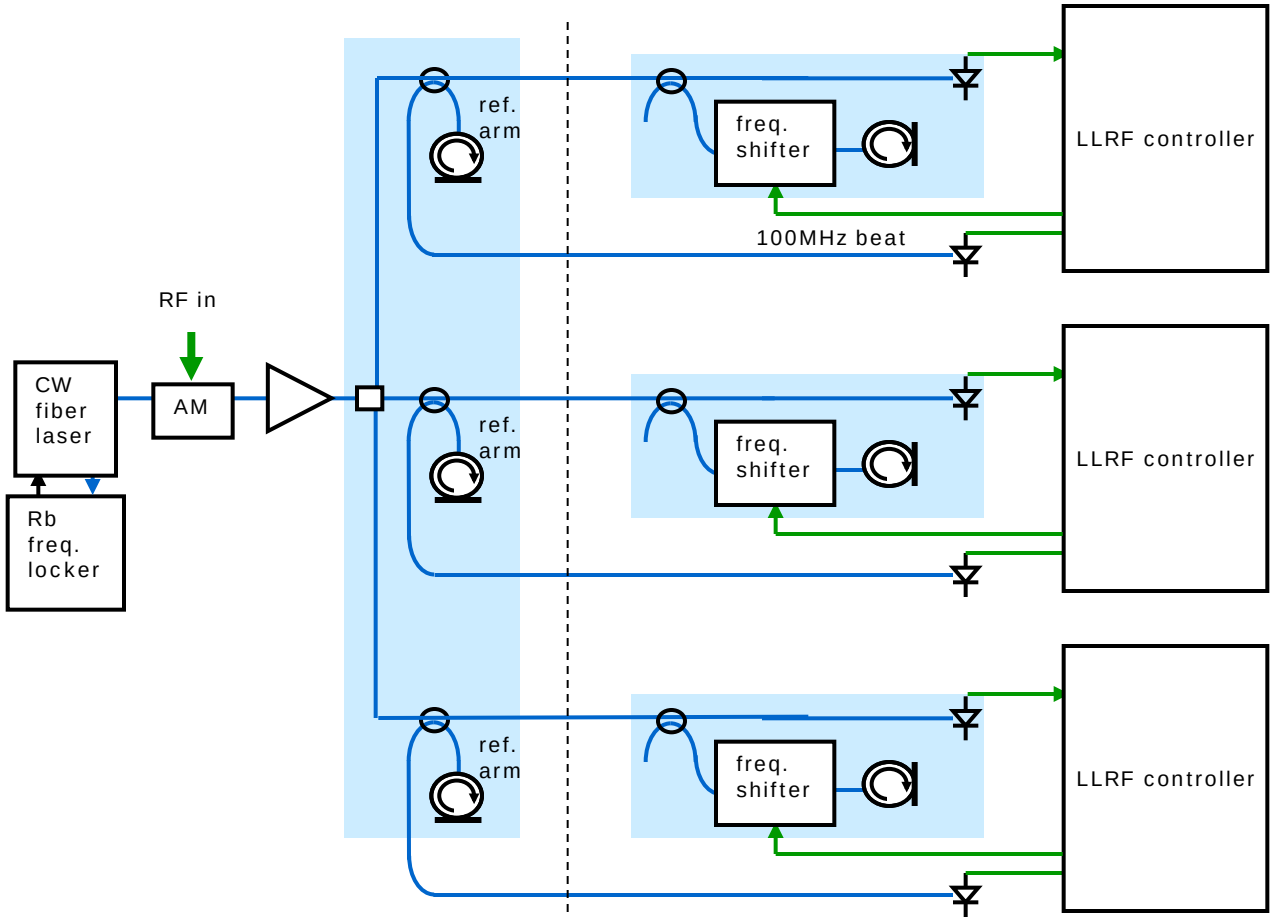

- Since all processing is at reciever, a multi-channel transmitter is not complex
  - 32-channel amp/splitter/ref arm fits in 8U (14”) high rack chassis

Two-channel test interferometer

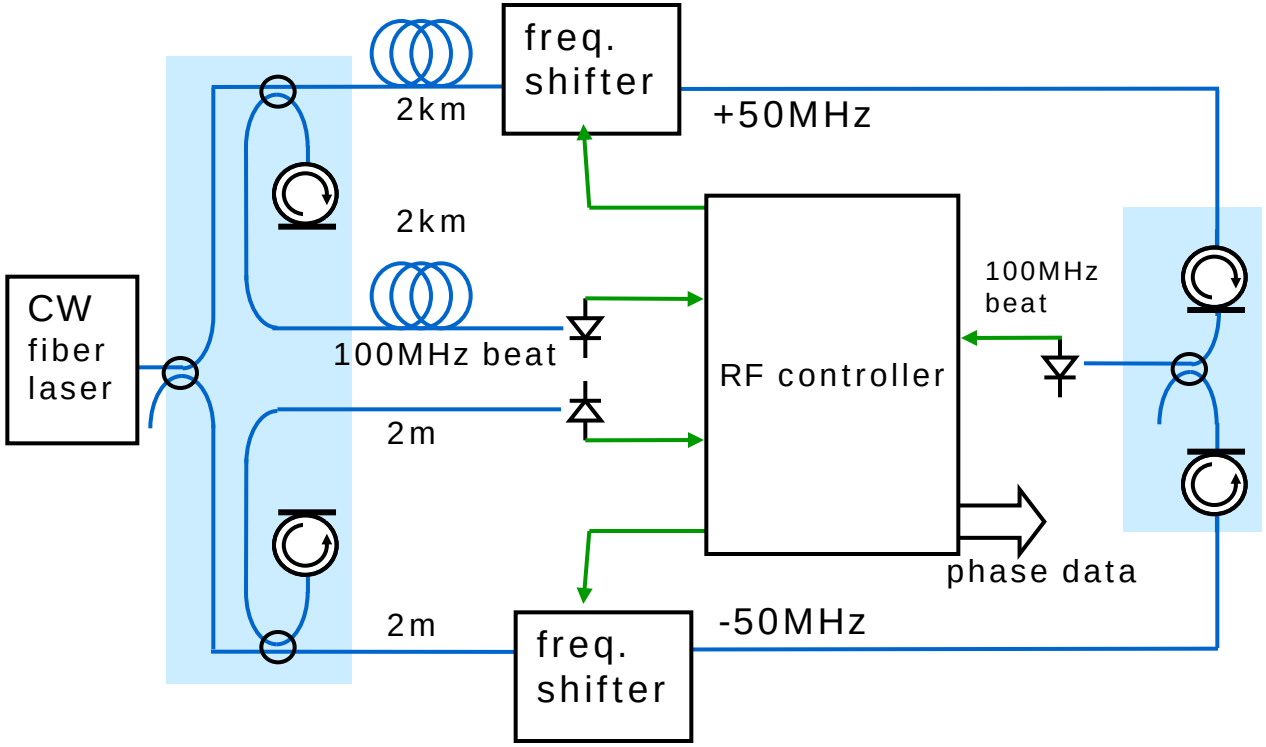

- This is an out-of-loop test to see if the interferometers are working
- Also, it's a measurement of the actual drift and noise
- We installed this in LCLS, and measured tunnel and gallery 2km fibers

Test interferometer results

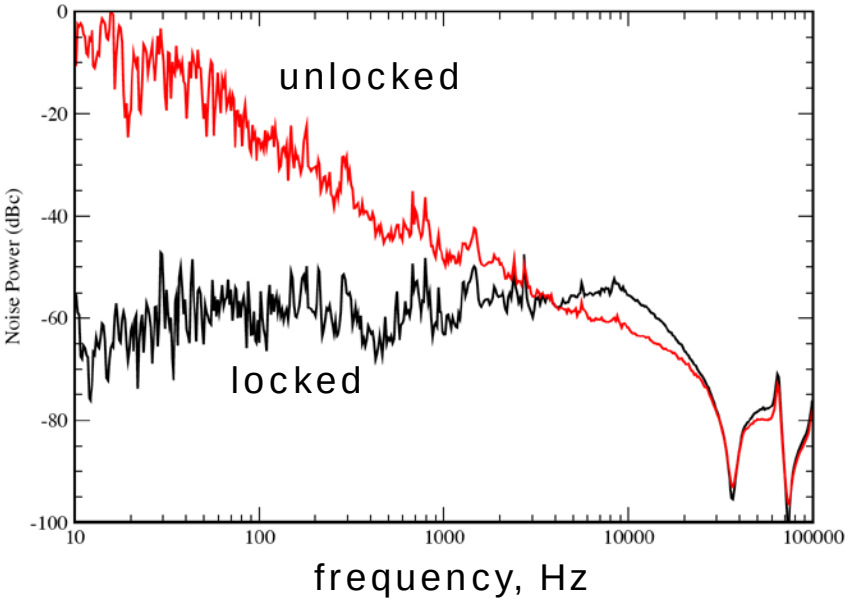

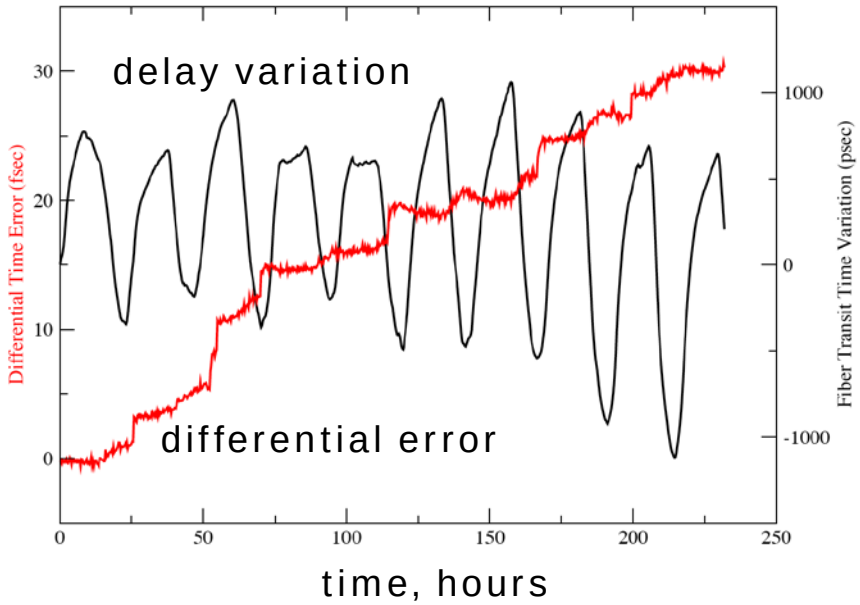

- Translating phase error on the 100MHz beat note to 200THz optical, the integrated jitter is ~0.25fs (assuming perfect wavelength stability)
- With 2ns total correction, the average drift is 3fs (less than one wave) per day
  - We later found the monotonic drift was a computation artefact

Receiver functions are implemented by a digital phase detector

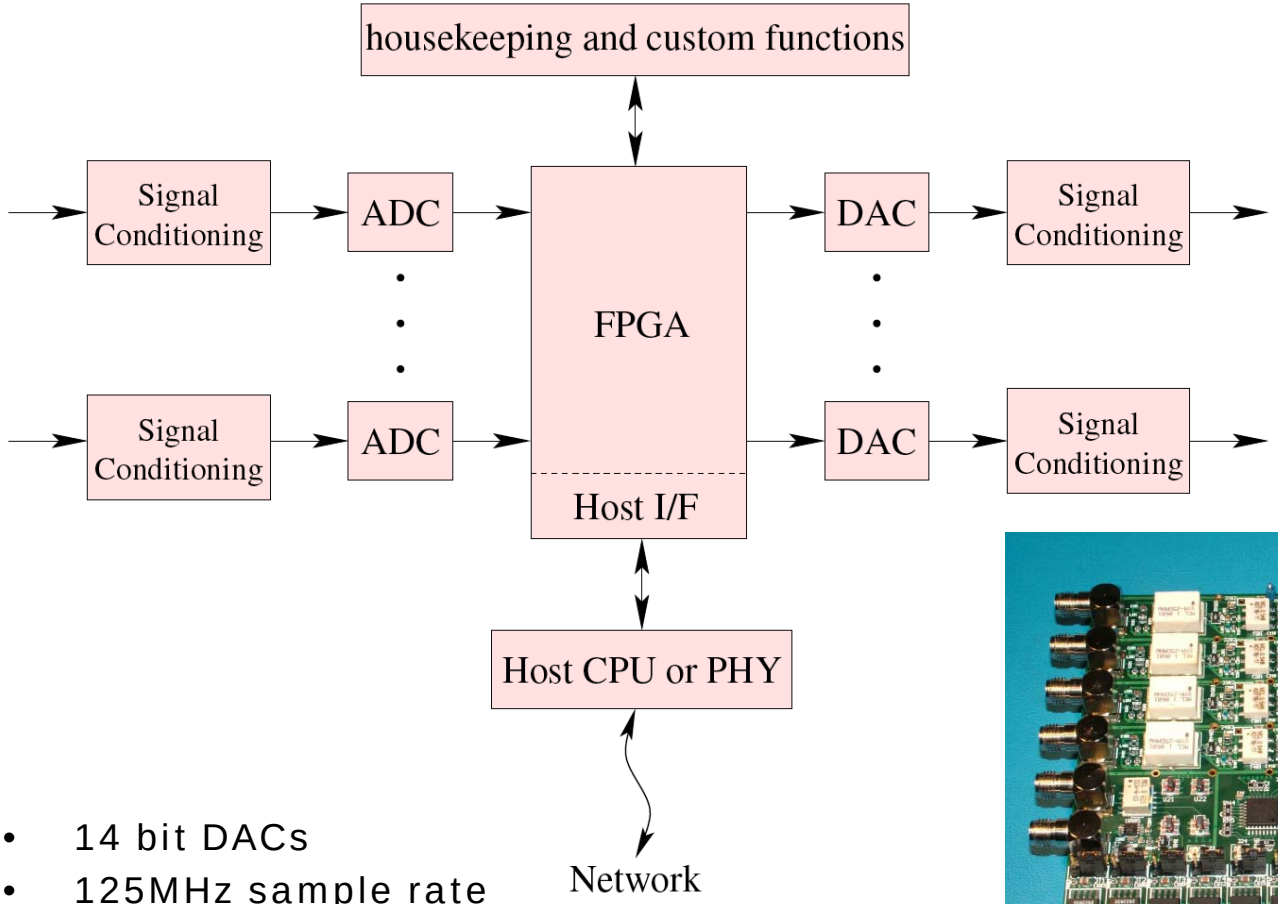

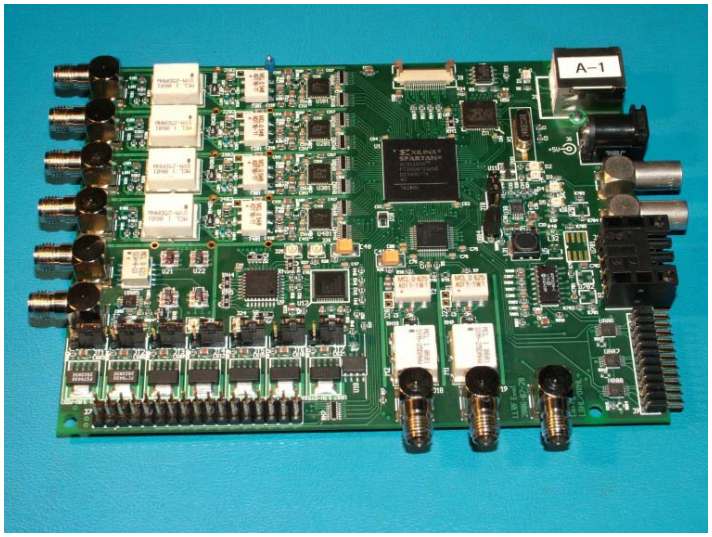

- 14 bit DACs
- 125MHz sample rate
- It controls both the interferometer and RF phase locked loops

Phase detector stability test

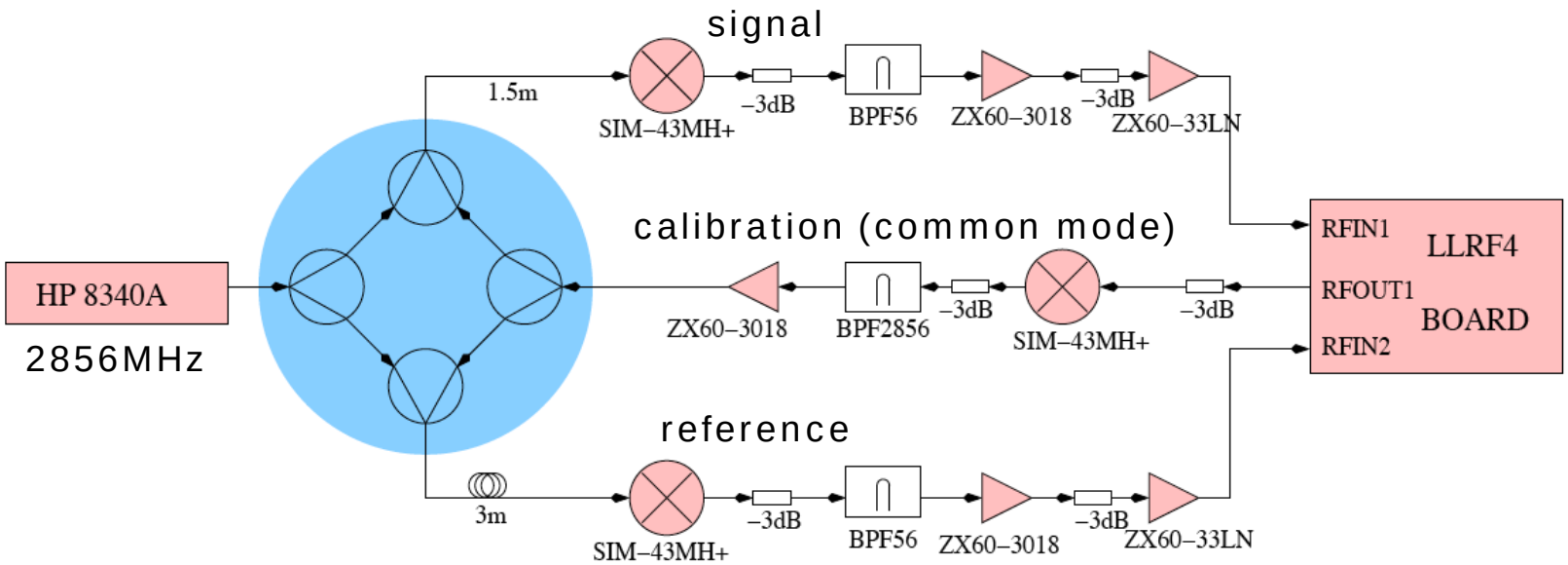

- Blue area is temperature stabilized
- Signal paths to digitizer are not delay stable
  - We are measuring the phase difference between signal and reference
  - The calibration signal presents a common mode signal to both paths, so that differential delay changes can be subtracted out

Phase stability test results

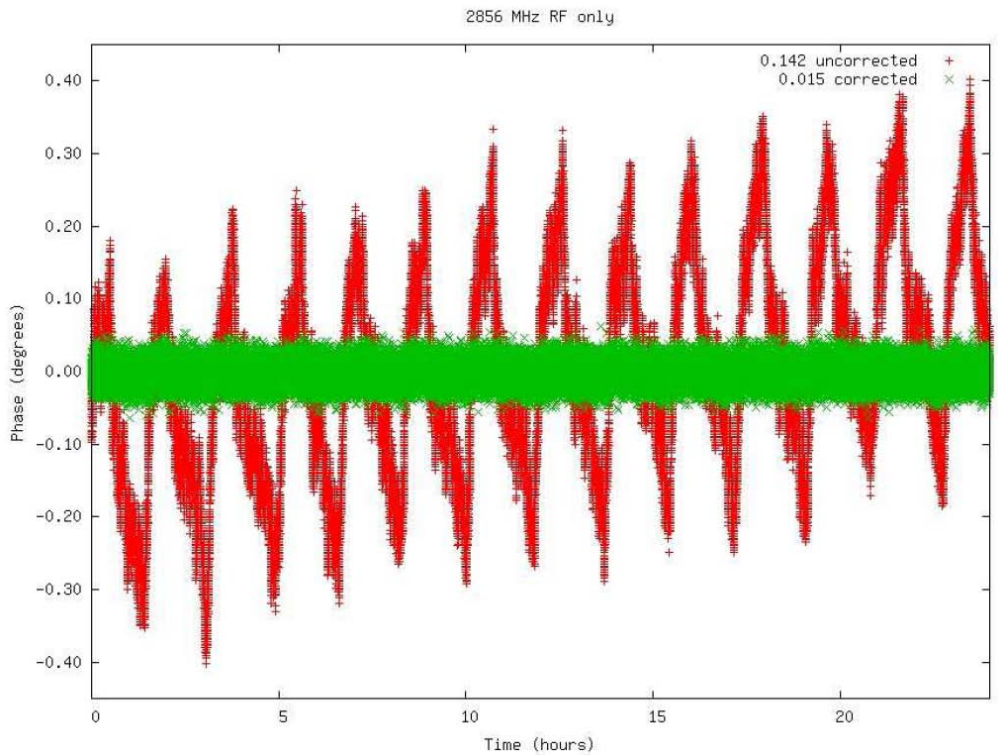

- 24 hours, 125kHz bandwidth, 2856MHz input
- Uncorrected differential temporal error, 140fs RMS
- Corrected differential temporal error, 15fs RMS
- We are close to the theoretical limit, given the the noise figure of the components

We tested a dual channel system

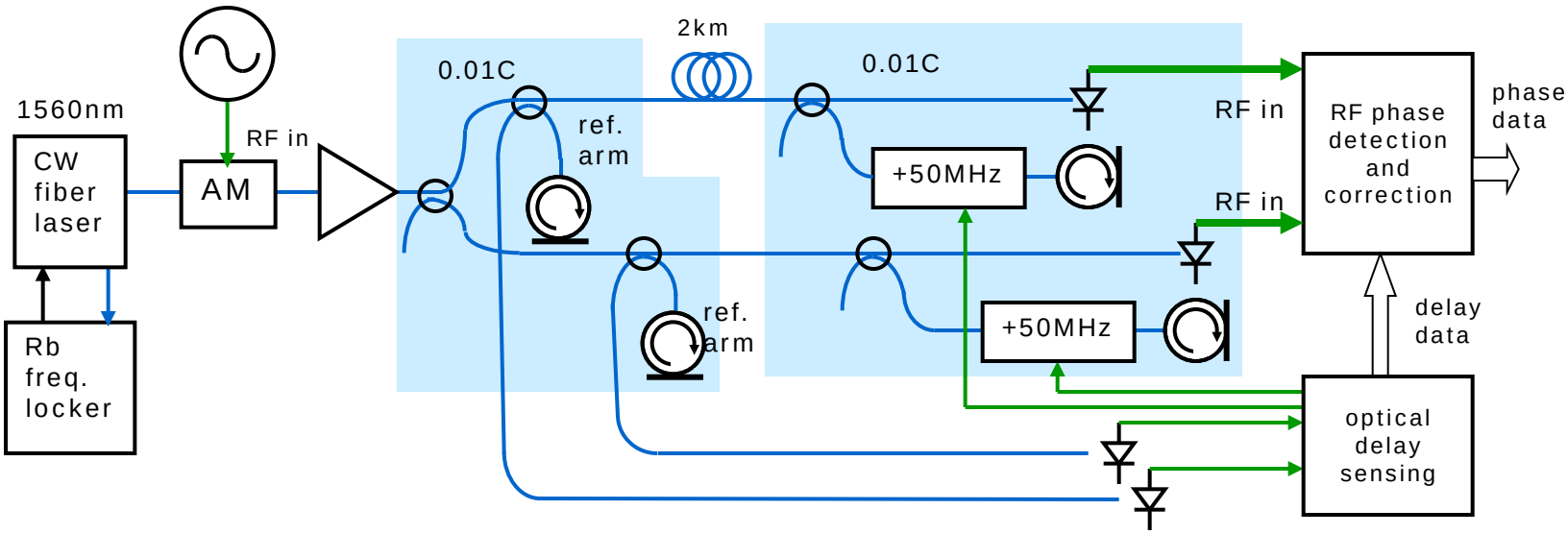

- Opt. Lett. 34, 3050 (2009)
- Measurement of the differential phase variation between two stabilized links

Dual-channel results

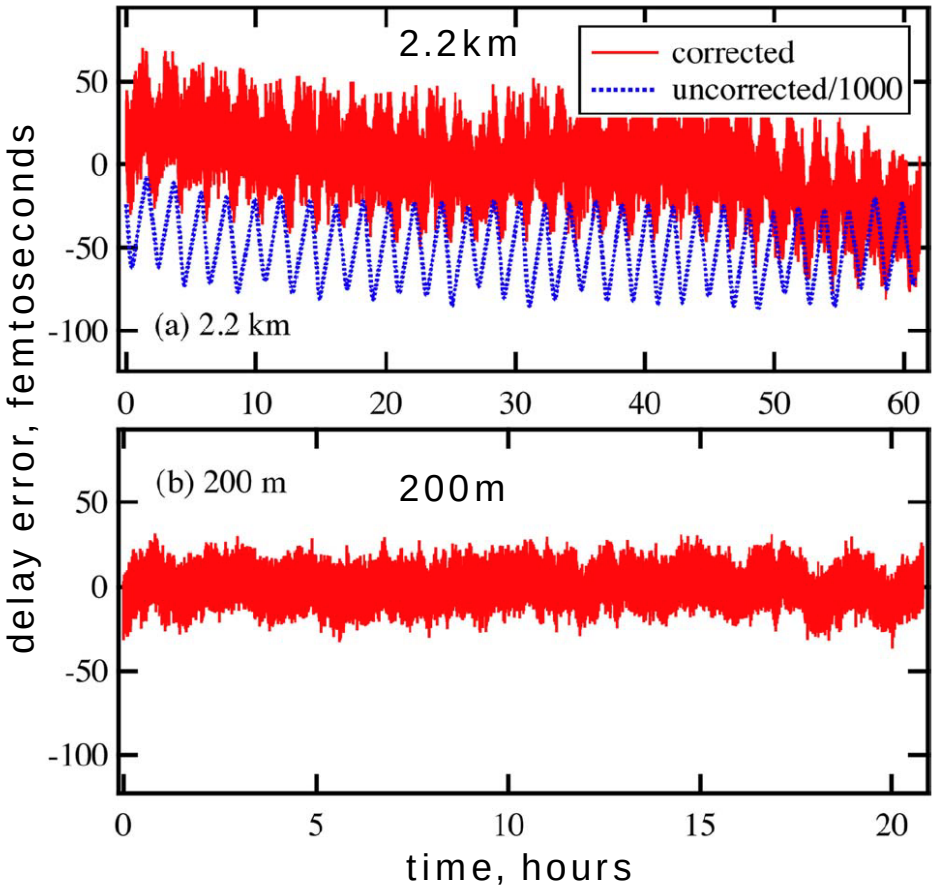

- 1kHz bandwidth
- For 2.2km, 19fs RMS over 60 hours
- For 200m, 8.4fs RMS over 20 hours
- 2-hour variation is room temperature

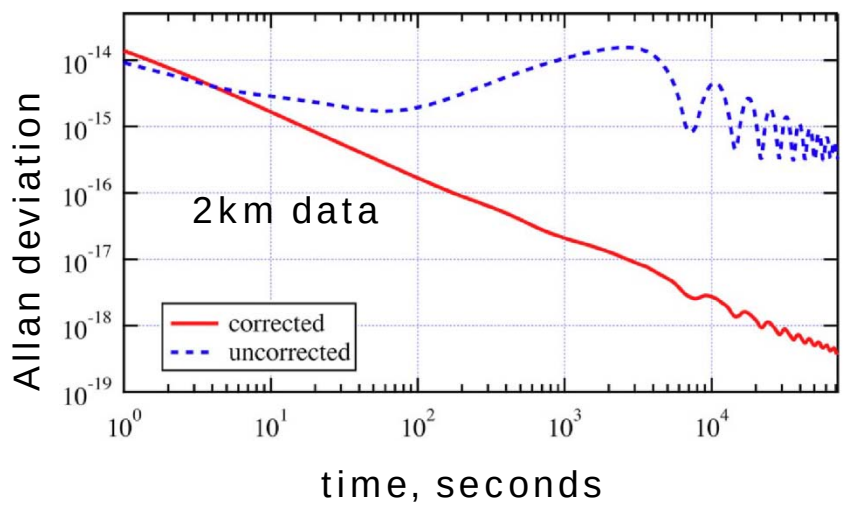

We correct for group versus phase delay

- Group delay is not equal to phase delay, due to dispersion

$$n_g = n + \varpi \frac{dn}{d\varpi} \qquad \underline{\textit{and also}} \qquad \frac{dn_g}{dT} \neq \frac{dn}{dT}$$

- A temperature dependent Sellmeier equation was fitted to previous data by Ghosh et al (IEEE JLT 12, 1338)

$$n^2 = A(T) + \frac{B(T)}{(1 - C(T)/\lambda^2)} + \frac{D(T)}{(1 - E(T)/\lambda^2)} \Rightarrow n_g(T) - n(T) \cong 1\%$$

- We correct for group delay by adding RF delay proportional to the optical correction

early test
with and without
feedforward
correction:

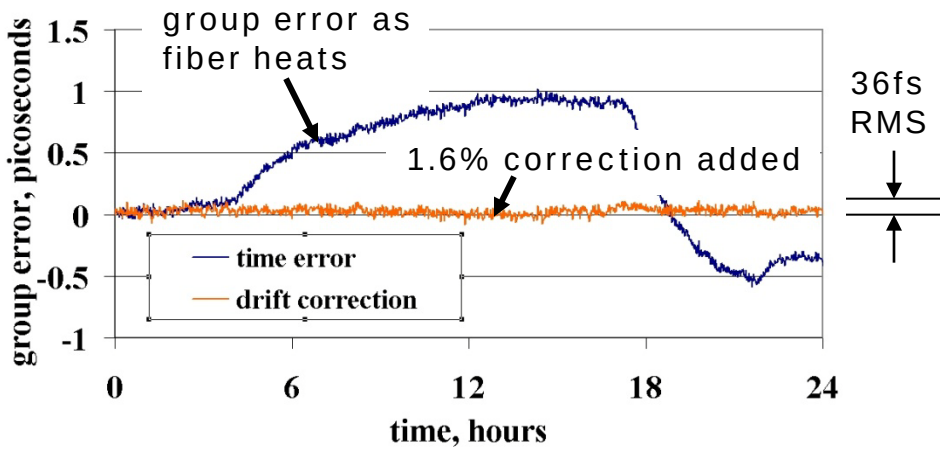

We determine the additional correction by adjusting to minimize error in situ

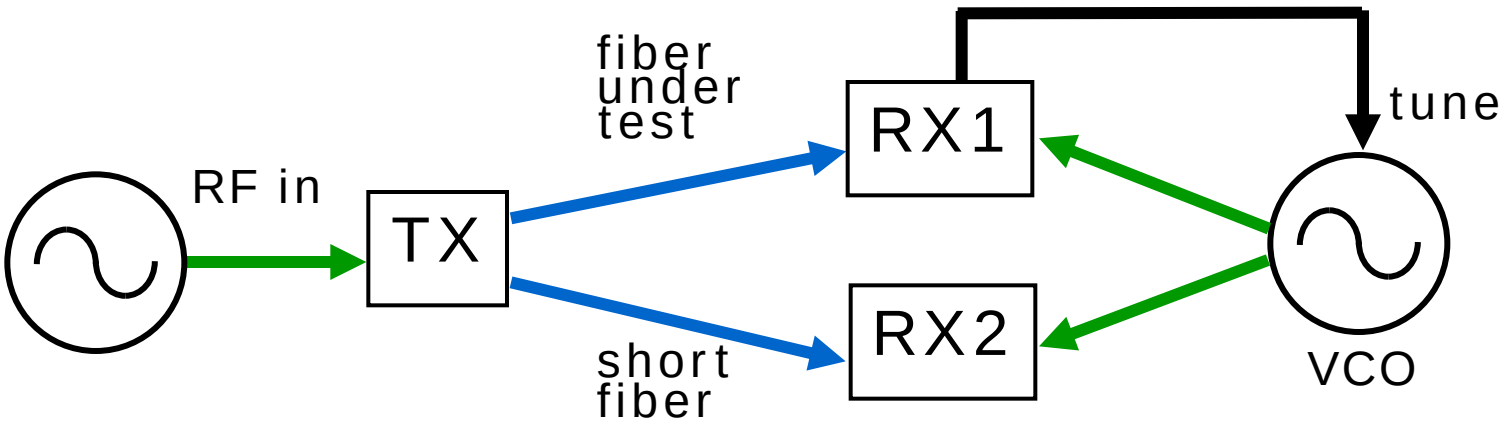

- Adjust feedforward correction until error is minimized
- We don't find significant changes to this factor
  - Tested mainly on multi-fiber SMF cable

Power-to-phase conversion in the photodiode is not a problem

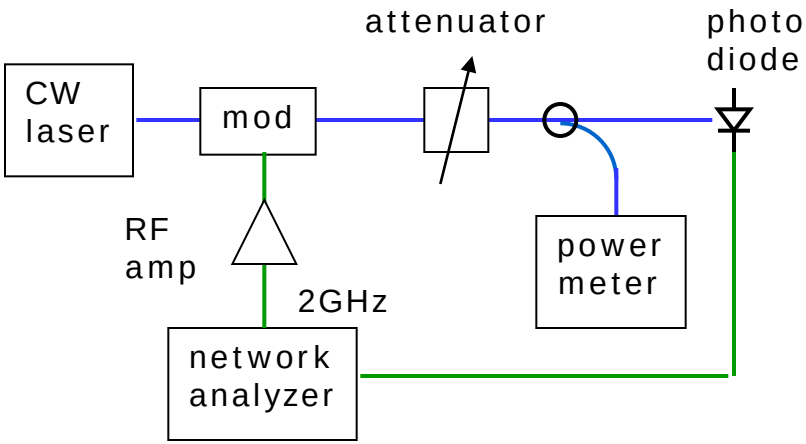

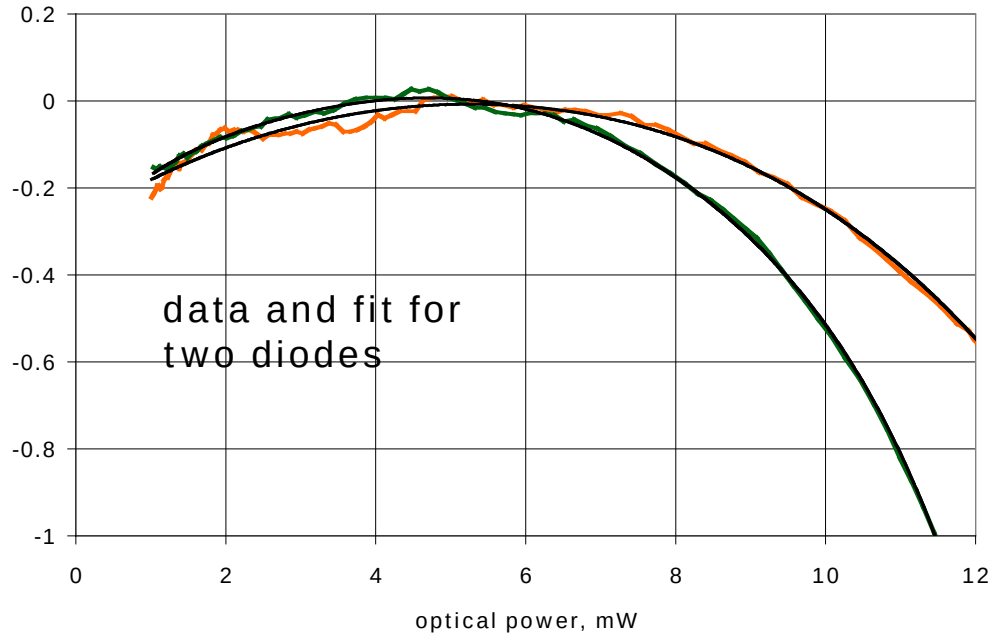

- Near saturation, high density of photocarriers screens applied field
  - Carriers are not swept out, response is slowed
  - Why it's not monotonic is unclear, but it's useful
- +/- 10% power variation around zero slope point causes <10fs time shift
- In practice, power is stable to this degree and we don't have to regulate
  - This is an option

Manufacturer knows about this, is improving diodes

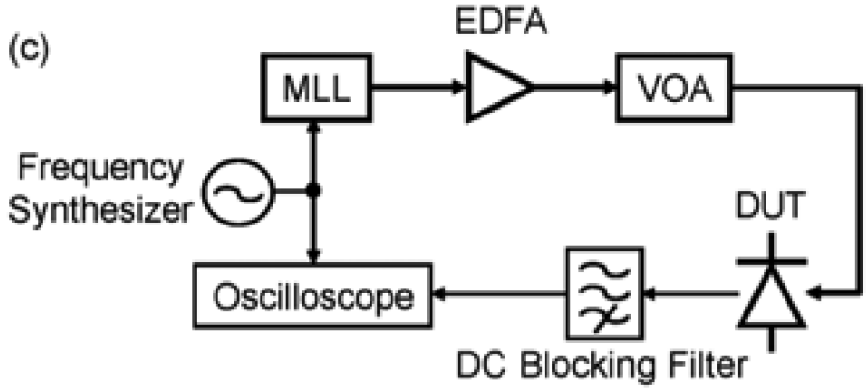

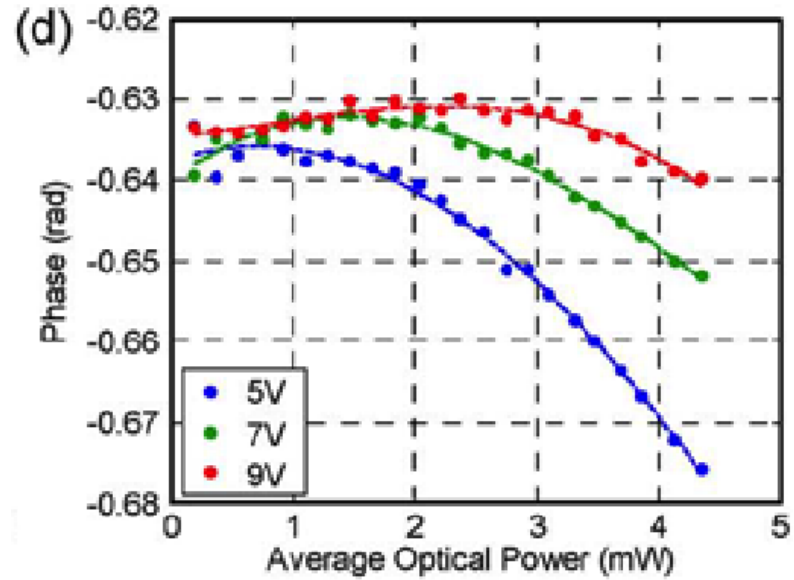

Joshi and Datta, IEEE Phot. Tech. Lett. 21, 1360 (2009)

- Their results were for pulses, 1GHz harmonic
- We need to test these with modulated CW, which has much smaller effect
- At least we don't have to worry the effect will get worse
  - New zero slope point is OK, reduces power requirements

LCLS timing scheme

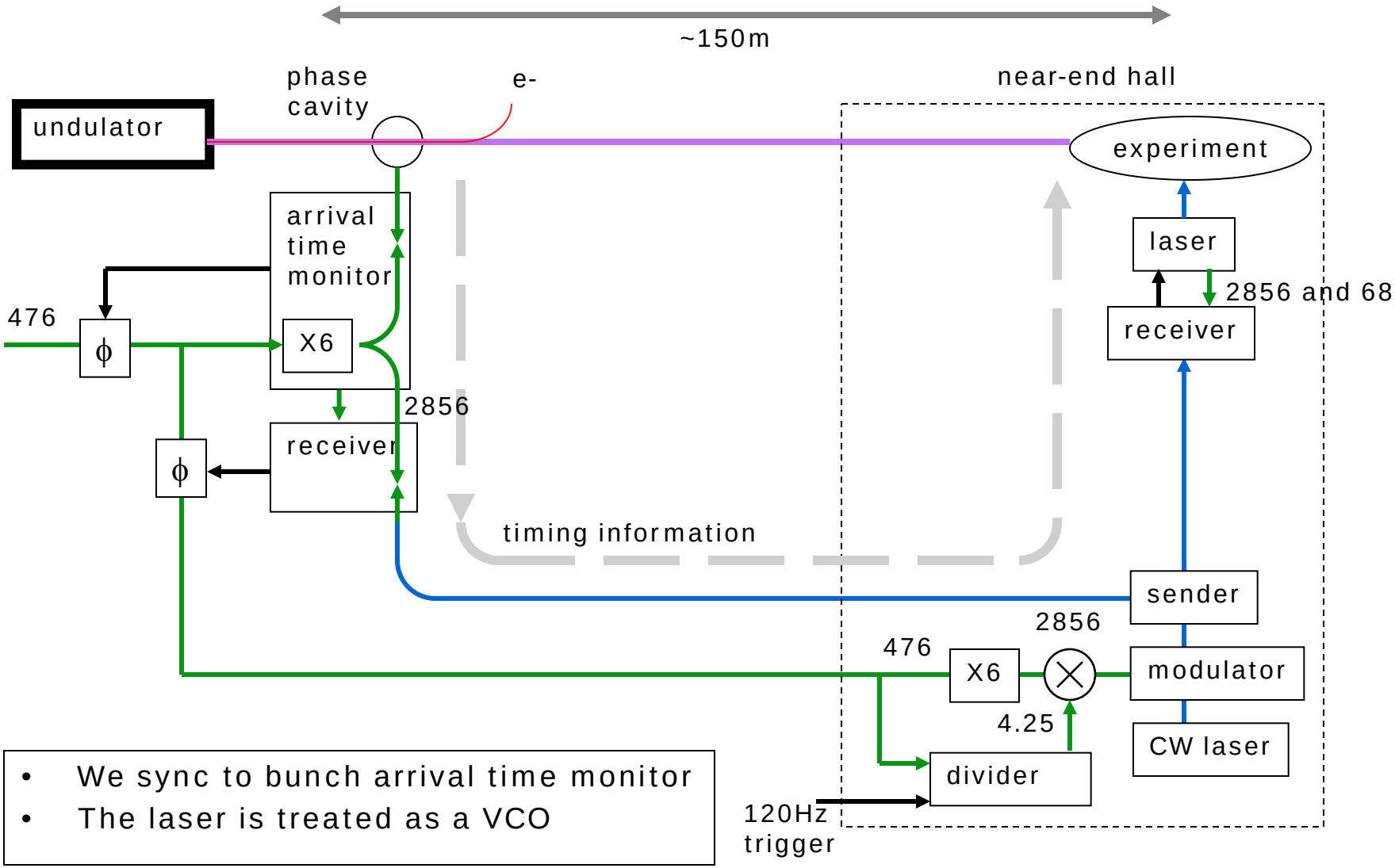

- We sync to bunch arrival time monitor
- The laser is treated as a VCO

2-channel, out-of-loop, in situ test

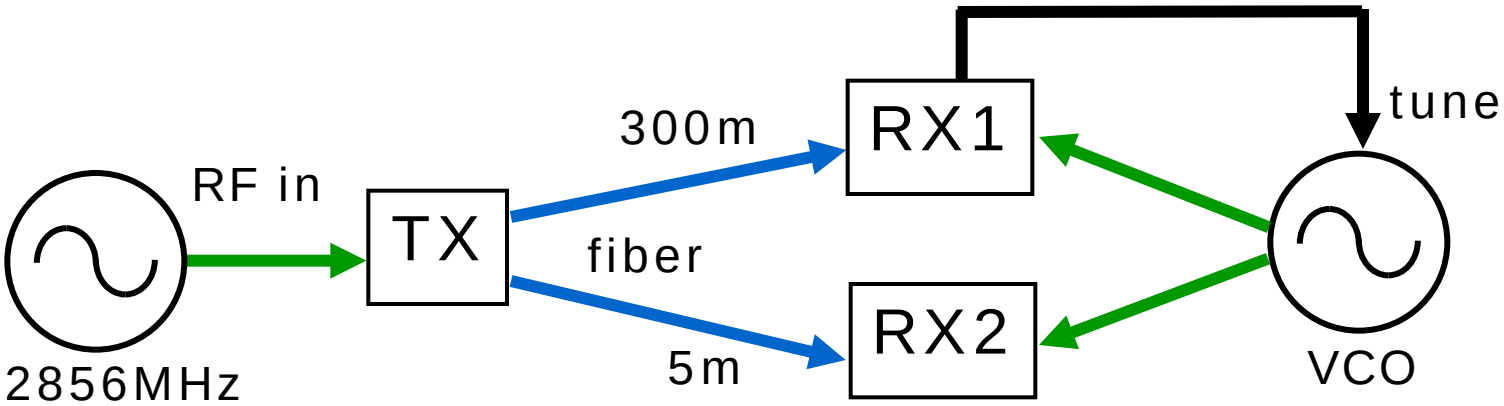

- 27fs RMS in 125kHz BW
- 16fs RMS in 1kHz BW
- Drift is due to short cable between receivers, room temperature

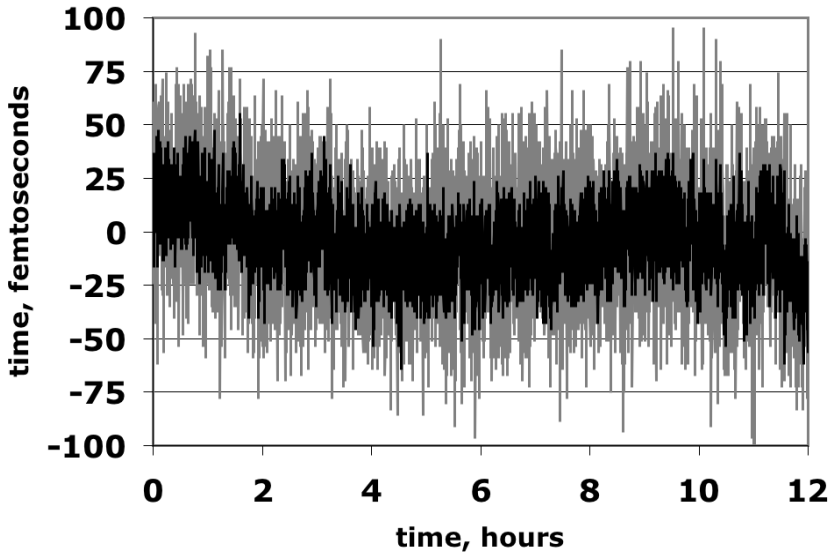

Laser locking configuration

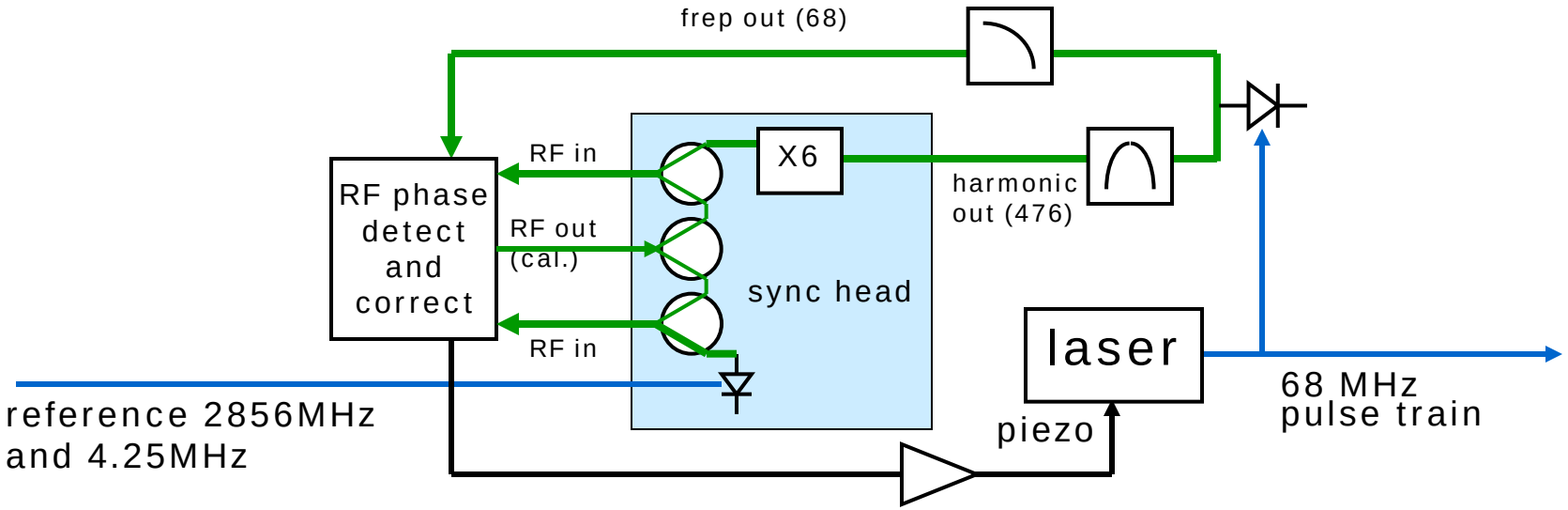

- Phase compare at 2856MHz
- Sync first to 68MHz to remove “bucket ambiguity”
- Works better than the commercial lockbox
- New arrangement uses faster diode, eliminates X6 multiplier

In-loop results

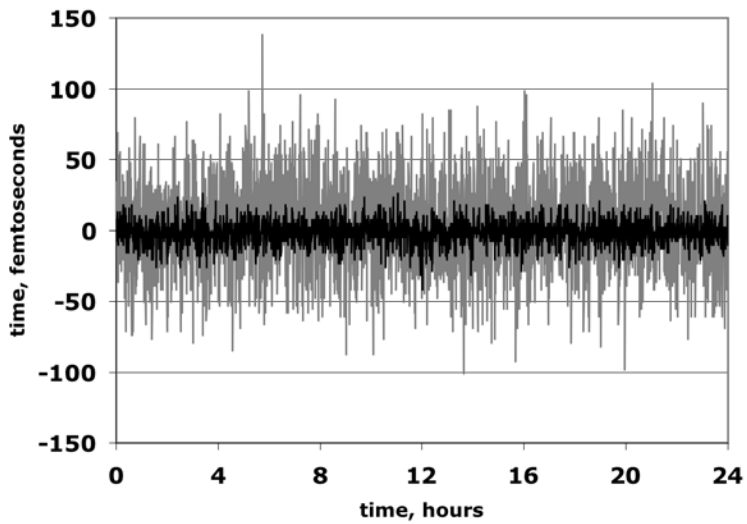

RF control error signal
125kHz BW (gray): 31fs RMS
1kHz BW (black): 8fs RMS

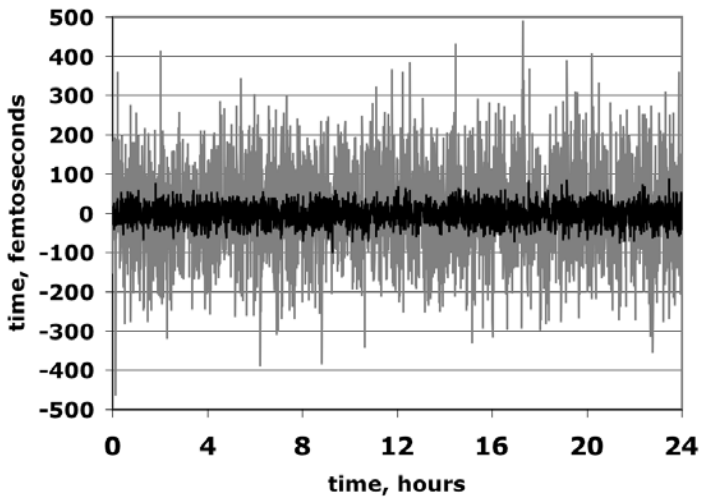

Laser control error signal
125kHz BW (gray): 120fs RMS
1kHz BW (black): 25fs RMS

- Improvements to the laser should decrease high frequency noise
  - Acoustic and vibration isolation
  - Lower noise pump

The transmitter fits in a standard rack

- VCO
- Receiver (for laser)
- Splitter
- Diagnostic
- Amplifier
- Modulator
- Wavelength locker
- CW laser

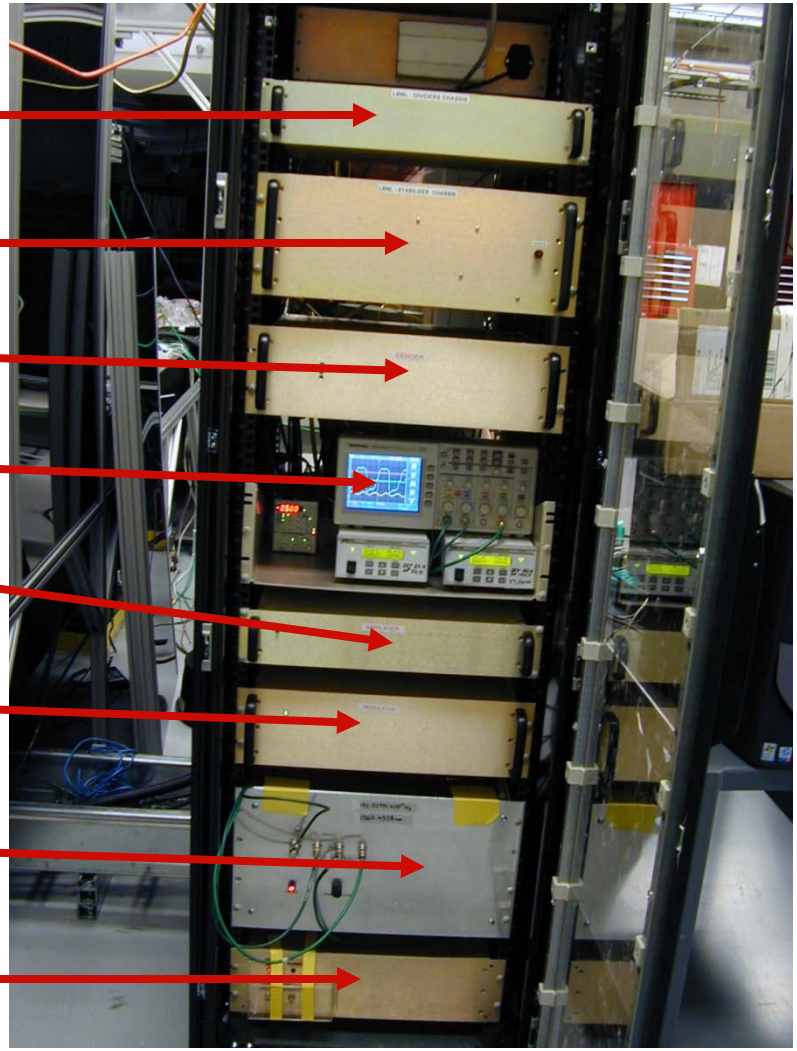

Conclusions, future work

- We have demonstrated a laser-to-RF sync system in an FEL
  - 16fs between two RF channels, 25fs laser loop error (1kHz)
  - Used reliably for experiments (as reported earlier)
- Easily manufacturable, expandable
  - First commercially produced subsystems being tested
  - LCLS is engineering next version, will be making 8 channels soon, upgrading transmitter to 16 channel capability

- Future work
  - Improve laser control
  - Better synchronization measurements
  - Try higher frequencies