Series 100 Slam Shut Valve

Technical Bulletin

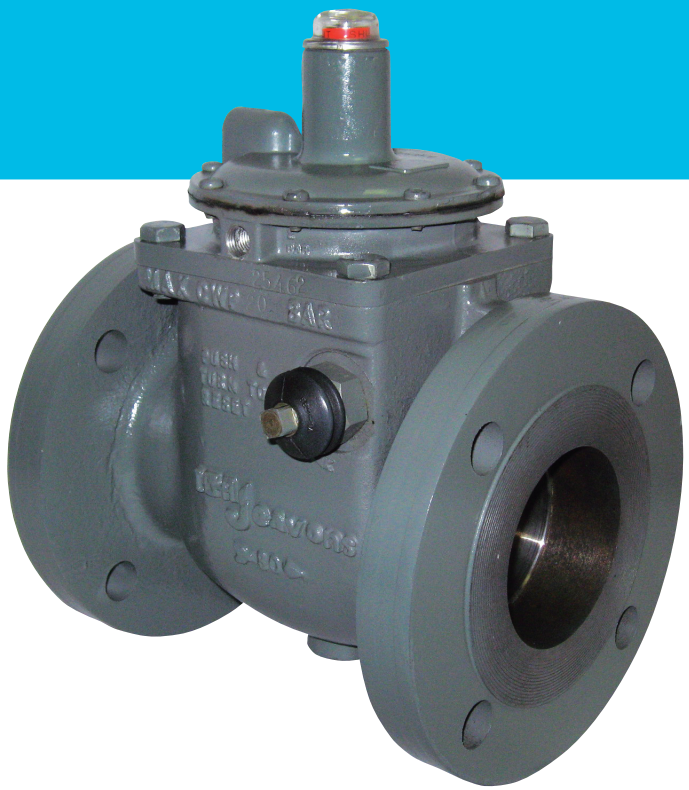

elster

The Series 100 Slam Shut protects gas installations against overpressure conditions by automatically shutting off the gas flow.

General Information

Outlet pressures between 7" W.C. and 87 PSIG are available. Operating temperature range is 5°F to 175°F (-20°C to 80°C). Full bore design results in very low pressure drop across the Series 100 Slam Shut.

The Series 100 Slam Shut has been approved to module B + D of the PED 9723/EC by BSI (Notified body No. 0086). It is clasified as Category IV equipment and a safety accessory.

Features

- Available in 2", 3", and 4" pipe sizes ANSI Series 150 Raised Face flange body or ANSI Series 150 Flat Face flange body
- 1/4" NPT external sense line
- Spring loaded
- Visual Trip Indicator

Theory of Operation

In the trip mechanism, a spring loaded shaft (A) acts downwards on a series of ball bearings (B) tending to force them radially outwards.

The bearings are held against the shaft by the bearing cage (C) which is connected to the pressure sensing diaphragm (D). Diaphragm and bearing cage are spring loaded via the pressure setting springs (E). The valve disc assembly (F) is retained in the open position via the spring clip (G) which locates in a recess in the shaft (A). The valve disc assembly is spring loaded to the closed position thus forcing the spring clip against the recess.

Valve Operation

As the sense pressure reaches the desired trip point it acts against the pressure sensing diaphragm and pressure setting spring.

The bearing cage is lifted allowing the ball bearings to move radially outwards against the bearing cage taper to a point where the shoulder diameter on the spring loaded shaft is free to pass through the bearings (TRIP POINT).

As the shaft moves through the bearings it releases the spring clip (G) thereby allowing the valve disc assembly to operate to the closed position.

A valve position indicator (H) indicates that the valve has closed.

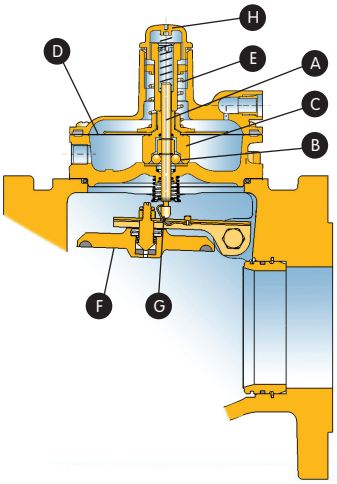

In the closed position, gas pressure acts upon the valve ensuring positive lock up.

In order to re-arm the valve this pressure must first be equalized across the valve if damage to the mechanism is to be avoided. In the Series 100 Slam Shut this is AUTOMATICALLY achieved when the re-arming procedure is undertaken. When the re-arming shaft is rotated a small valve incorporated into the main valve is opened allowing pressure to pass downstream. This device eliminates costly by-passes and potential damage due to neglect in carrying out equalizing procedures.

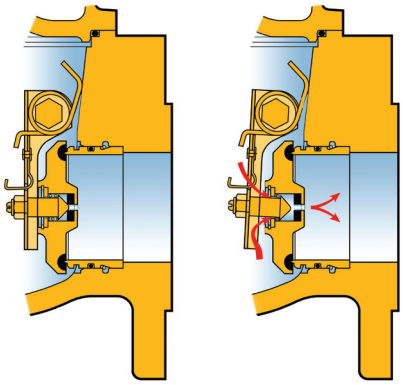

All components have been designed such that complete servicing of the valve can be carried out with the body installed in the pipe.

As all components in the valve are positively biased and located so that the valve can be installed in any position including inverted. If the Slam Shut is to be exposed to freezing rain, snow, or rain, the vent should either face downward, fitted with an elbow to point downward, or fitted with a "U" bend pipe. If a fitting is used, the vent screen should be installed in the open end of the fitting. A protective cover can be used instead of the fitting.

The actuating head is designed to be rotated to allow the breather vent to be positioned downwards to prevent moisture ingress.

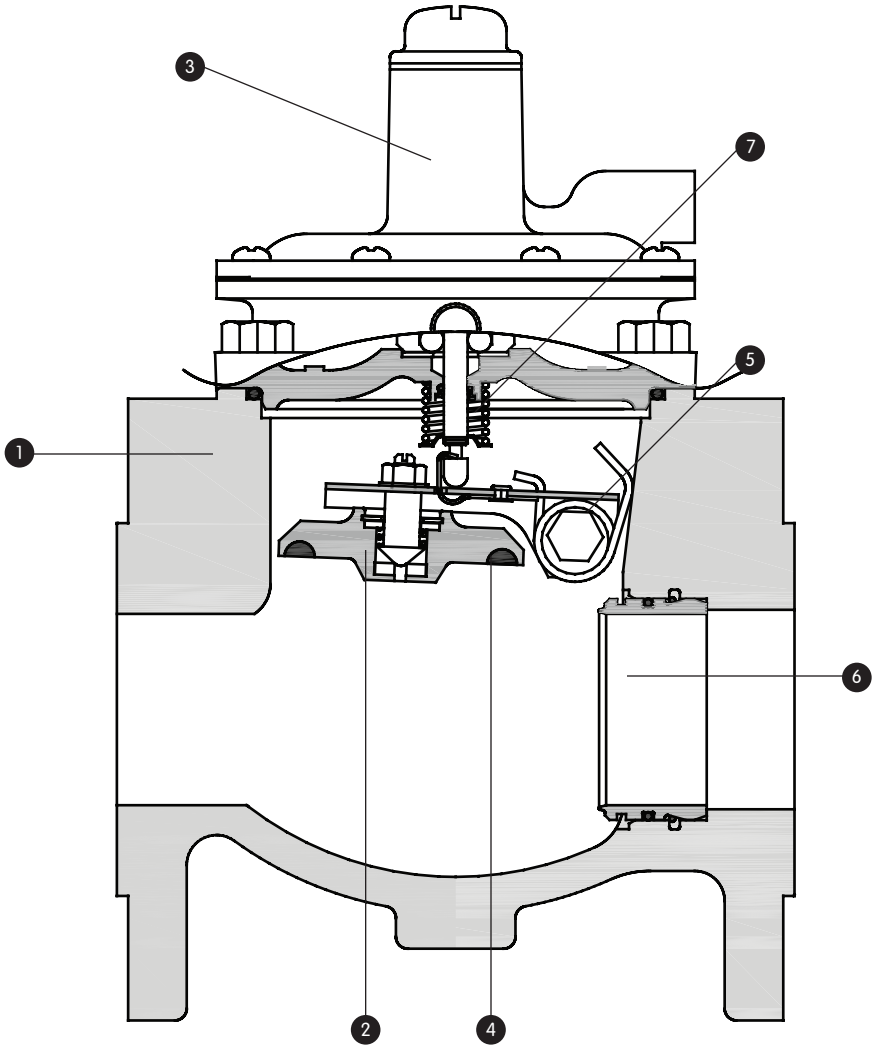

Material Specifications

1. Valve Body - Ductile iron
2. Valve Seat - Stainless steel
3. Loading Springs - Carbon steel - zinc plated
4. Valve Discs - Buna N rubber
5. Closing Spring - Stainless steel wire
6. Orifice - 304 Stainless steel, self aligning
7. Actuating Mechanism - cast aluminum alloy

Low Pressure Assembly (7" W.C. - 8 PSIG)

Trip Pressure (bar)	Color Code	Part Number
7" - 14" W.C. (0.018 - 0.035)		70017P091
14" - 28" W.C. (0.014 - 0.070)	Light Blue	70017P075
1 - 2 PSIG (0.71 - 0.14)	Red/Brown	70017P076
2 - 3 PSIG (0.141 - 0.20)	Purple	70017P077
3 - 5 PSIG (0.201 - 0.350)	Orange/ Yellow	70017P078
5 - 8 PSIG (0.351 - 0.560)	Orange/ Dark Green	70017P079

When changing pressure ranges the Actuating Mechanism must be replaced

Medium Pressure Assembly (8 - 20 PSIG)

Trip Pressure (bar)	Color Code	Part Number
8 - 14 PSIG (0.561 - 0.975)	Orange/ Yellow	70017P078
14 - 20 PSIG (0.976 - 1.4)	Orange/ Dark Green	70017P079

High Pressure Assembly (14 - 87 PSIG)

Trip Pressure (bar)	Color Code	Part Number
14 - 26 PSIG (1.0 - 1.8)	Purple	70017P077
24 - 51 PSIG (1.7 - 3.5)	Orange/ Yellow	70017P078
36 - 87 PSIG (2.5 - 6)	Orange/ Dark Green	70017P079

Slam Shut Capacity Performance

.1 PSI Pressure Drop (0.01 bar)

Series 100 Slam Shut Valve Capacity MSCFH (m^3/h)

Inlet Pressure PSIG (bar)	2" (50 mm)	3" (80 mm)	4" (100 mm)
5 (0.3)	15 (424.8)	38 (1076.0)	32 (906.1)
10 (0.7)	17 (481.4)	43 (1217.6)	72 (2038.8)
15 (1.0)	18 (509.7)	47 (1330.9)	79 (2237.0)
20 (1.4)	20 (566.3)	51 (1444.2)	85 (2406.9)
25 (1.7)	21 (594.7)	55 (1557.4)	91 (2576.8)
30 (2.1)	22 (623.0)	58 (1642.4)	97 (2746.7)
35 (2.4)	24 (679.6)	61 (1727.3)	102 (2888.3)
40 (2.8)	25 (707.9)	64 (1812.3)	107 (3029.9)
45 (3.1)	26 (736.2)	67 (1897.2)	112 (3171.5)
50 (3.5)	27 (764.6)	70 (1982.2)	116 (3284.8)
55 (3.8)	28 (792.9)	72 (2038.8)	121 (3426.3)
60 (4.1)	29 (821.2)	75 (2123.8)	125 (3539.6)
65 (4.5)	30 (849.5)	77 (2180.4)	129 (3652.9)
70 (4.8)	31 (877.8)	80 (2265.4)	133 (3766.1)
75 (5.2)	32 (906.1)	82 (2322.0)	137 (3879.4)
80 (5.5)	33 (934.5)	84 (2378.6)	141 (3992.7)

Slam Shut Capacity Performance

.5 PSI Pressure Drop (0.03 bar)

Series 100 Slam Shut Valve Capacity MSCFH (m^3/h)

Inlet Pressure PSIG (bar)	2" (50 mm)	3" (80 mm)	4" (100 mm)
5 (0.3)	33 (934.5)	86 (2435.3)	32 (906.1)
10 (0.7)	37 (1047.7)	96 (2718.4)	161 (4559.0)
15 (1.0)	41 (1161.0)	106 (3001.6)	176 (4983.8)
20 (1.4)	44 (1245.9)	114 (3228.1)	190 (5380.2)
25 (1.7)	47 (1330.9)	122 (3454.7)	204 (5776.6)
30 (2.1)	50 (1415.8)	130 (3681.2)	216 (6116.4)
35 (2.4)	53 (1500.8)	137 (3879.4)	228 (6456.2)
40 (2.8)	56 (1585.7)	143 (4049.3)	239 (6767.7)
45 (3.1)	58 (1642.4)	150 (4247.5)	250 (7079.2)
50 (3.5)	60 (1699.0)	156 (4417.4)	260 (7362.4)
55 (3.8)	63 (1784.0)	162 (4587.3)	270 (7645.5)
60 (4.1)	65 (1840.6)	168 (4757.2)	279 (7900.4)
65 (4.5)	67 (1897.2)	173 (4898.8)	288 (8155.2)
70 (4.8)	69 (1953.9)	178 (5040.4)	297 (8410.1)
75 (5.2)	71 (2010.5)	184 (5210.3)	306 (8665.0)
80 (5.5)	73 (2067.1)	189 (5351.9)	314 (8891.5)

Slam Shut Capacity Performance

1 PSI Pressure Drop (0.07 bar)

Series 100 Slam Shut Valve Capacity MSCFH (m^3/h)

Inlet Pressure PSIG (bar)	2" (50 mm)	3" (80 mm)	4" (100 mm)
5 (0.34)	47 (1330.9)	122 (3454.7)	203 (5748.3)
10 (0.69)	53 (1500.8)	136 (3851.1)	227 (6427.9)
15 (1.03)	58 (1642.4)	149 (4219.2)	249 (7050.9)
20 (1.38)	63 (1784.0)	162 (4587.3)	269 (7617.2)
25 (1.72)	67 (1897.2)	173 (4898.8)	288 (8155.2
30 (2.07)	71 (2010.5)	183) (5182.0)	305 (8636.6)
35 (2.41)	75 (2123.8)	193 (5465.2)	322 (9118.0)
40 (2.76)	79 (2237.0)	203 (5748.3)	338 (9571.1)
45 (3.1)	82 (2322.0)	212 (6003.2)	353 (9995.8)
50 (3.45)	86 (2435.3)	220 (6229.7)	367 (10392.3)
55 (3.79)	89 (2520.2)	229 (6484.6)	381 (10788.7)
60 (4.14)	92 (2605.2)	237 (6711.1)	395 (11185.1)
65 (4.48)	95 (2690.1)	245 (6937.6)	408 (11553.3)
70 (4.83)	98 (2775.1)	252 (7135.8)	420 (11893.1)
75 (5.17)	101 (2860.0)	260 (7362.4)	433 (12261.2)
80 (5.52)	103 (2916.6)	267 (7560.6)	445 (12601.0)

Series 100 Slam Shut Valve Dimensions

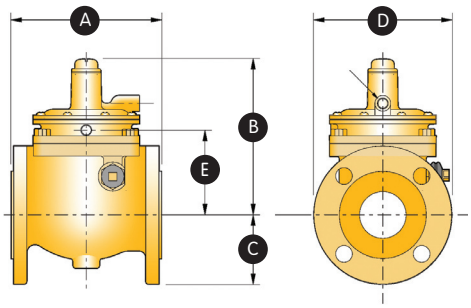

Slam Shut Dimensions and Weights

Size	A	B	C	D	E	Weight
2	7.09" 180 mm	7.36" 187 mm	3.26" 83 mm	6.54" 166 mm	3.98" 101 mm	28 lbs. 13 kg
3	8.66" 220 mm	7.87" 200 mm	3.94" 100 mm	7.87" 200 mm	4.49" 114 mm	37 lbs. 17 kg
4	10.63" 270 mm	8.90" 226 mm	4.33" 110 mm	8.66" 220 mm	5.51" 140 mm	53 lbs. 24 kg

100 Series Slam Shut Valve - Other Technical Data

Capacity Equations

The capacity tables are based on thousands of standard cubic feet per hour at 14.73 PSIG and 60°F.

Flow Rate

$$Q = 61\ C_v(\sqrt{\Delta P x P_1} / \sqrt{G})$$

- Q Flow Rate SCFH
- C_v Valve Coefficient
- P_1 Absolute Inlet Pressure
- ΔP Pressure Drop
- G Specific Gravity of Gas

Valve Coefficients

Valve Size	mm	C_v
2"	50	135
3"	75	348
4"	100	580*

* Estimated

Maximum Inlet Pressure

275 PISG (19 bar)

Maximum Trip Pressure

87 PISG (6 bar)

Other Gas Capacities

To determine the capacity of these regulators for gases other than natural gas, multiply the values within the capacity tables by a Specific Gravity Conversion Factor (F_g). The table below lists this factor for some of the more common gases.

Gas Type	Specific Gravity	Conversion Factor (F_g)
Air	1.00	0.77
Butane	2.01	0.55
Carbon Dioxide	1.52	0.63
Nitrogen	0.97	0.79
Propane	1.53	0.63

To calculate the Conversion Factor for other gases:

$$(F_g) = \sqrt{\frac{\text{Specific gravity of gas on which the capacity table is based}}{\text{Specific gravity of gas being used}}}$$

Example: If using propane and only having tables based on natural gas, the Specific Gravity Conversion Factor is :

$$(F_g) = \sqrt{\frac{\text{Specific gravity of natural gas (0.6)}}{\text{Specific gravity of propane (1.53)}}}$$

$$(F_g) = \sqrt{\frac{0.60}{1.53}}$$

$$(F_g) = 0.626$$

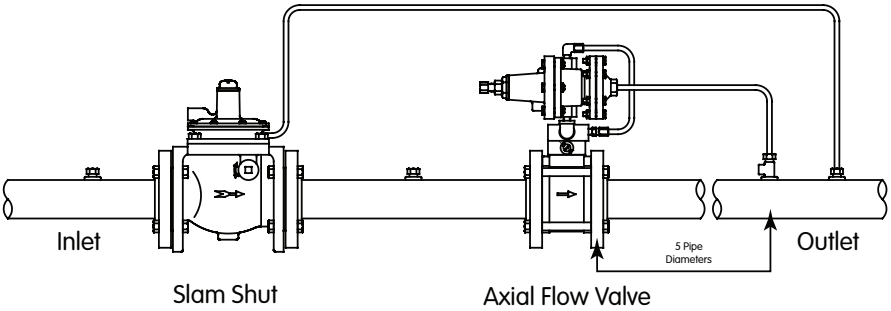

Typical Installation

The Slam Shut is used as a safety device where positive protection against excessive pressure is required. The Slam Shut is placed upstream of the gas pressure regulator. A sense line is installed from the connection on the Slam Shut to the gas piping downstream from the regulator. This brings the pressure downstream of the regulator back to the Slam Shut.

In the event that the line pressure or static pressure downstream of the regulator increases to the overpressure setting of the Slam Shut, positive automatic shutoff of the gas flow occurs. The Slam Shut is manually reset after the cause of the overpressure is corrected.

When the actuating mechanism is triggered, a snap action spring drives the Slam Shut closed making it possible to install the Slam Shut in any position. To prevent water from entering the vent, the vent should be positioned to face downward.

About Elster

A world leader in advanced metering infrastructure, integrated metering, and utilization solutions to the gas, electricity and water industries, Elster's systems and solutions reflect over 170 years of knowledge and experience in measuring precious resources and energy.

Elster provides solutions and advanced technologies to help utilities more easily, efficiently and reliably obtain and use advanced metering intelligence to improve customer service, enhance operational efficiency, and increase revenues. Elster's AMI solutions enable utilities to cost-effectively generate, deliver, manage, and conserve the life-essential resources of gas, electricity, and water.

Elster has a staff of over 7,000 serving customers globally in North America, Central America, South America, Europe, Asia, Africa and the Middle East.

Elster American Meter
2221 Industrial Road
Nebraska City, NE 68410-6889
USA

T +1 402 873 8200
F +1 402 873 7616

www.elster-americanmeter.com

Information contained herein is subject to change without notice. Product specifications may change. Contact your Elster American Meter representative for the most current product information. Printed in the United States.

EMS-TB8575.2-EN-P - June 2010
Supersedes EMS-TB8575.1