Spare Parts Catalogue

Version: 2017/03/13c NL

General Information

For any order of spare parts the following information is required:

- *Product type*
- *Product name & model*
- *Serial Number*
- *Part-Number*
- *Part-Description*

Exploded view drawings and code numbers are not contractual and subject to modification, in relation to Invacare® continous product improvement policy to meet end users needs.

The reproduction or use of this work, or of any substantial part of this work, in any form or by any electronic, mechanical or other means, including photocopying, scanning and recording, and in any information storage and retrieval system, including electronic transmission, is forbidden without the prior written permission of Invacare® International Sarl.

TABLE OF CONTENTS

(Serial number sticker) 5
(Packaging and Literature) 6
(Shroud top) 7
(Shroud bottom) 8
(Compressor and Mounting Hardware) 9
(Control Panel and P.C. Board) 10
(Sound Box Assembly) 11
(Sieve Bed Assembly and Product Tank) 12
(Accessories) 13

(Serial number sticker)

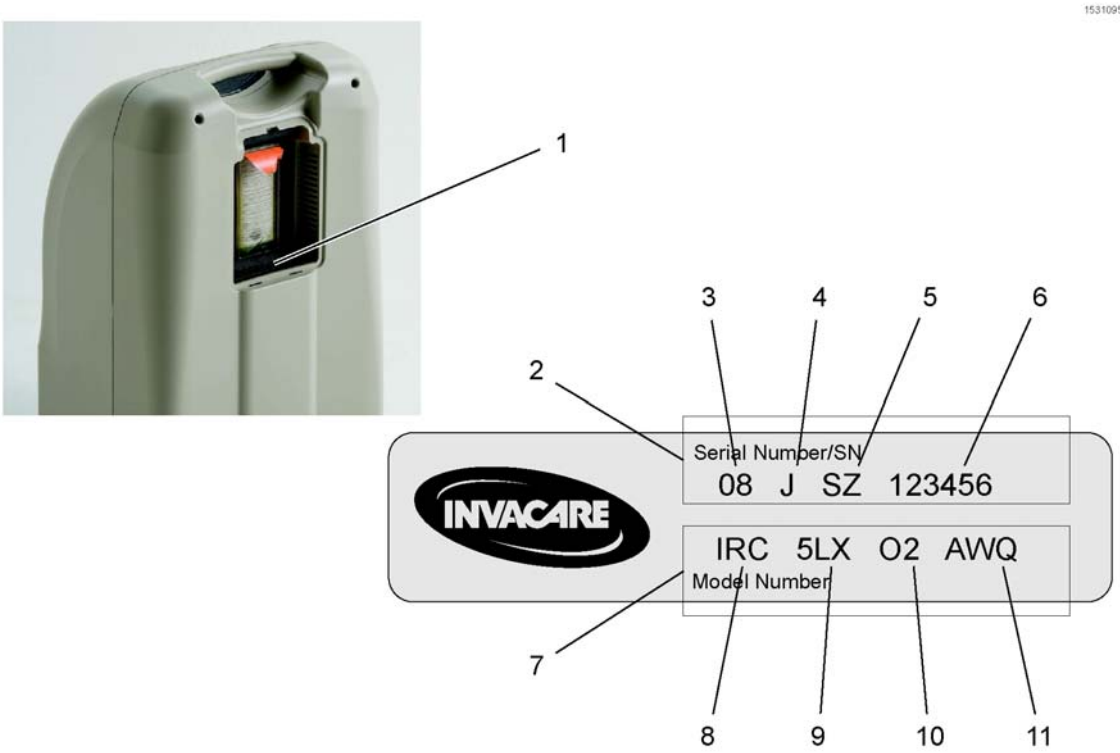

1	-	(Location of the Serial/Model Number Sticker)	1
2	-	(Serial number)	1
3	-	(Manufacturing Year)	1
4	-	(Manufacturing Month (A=Jan, B=Feb L=Dec))	1
5	-	(Manufacturing Location (F=Florida, SZ=Suzhou))	1
6	-	(Sequential number)	1
7	-	(Model Number)	1
8	-	(Invacare Respiratory Corporation)	1
9	-	(Maximum Litre per minute)	1
10	-	(Oxygen Sensor Equipped)	1
11	-	(All World Quiet)	1

(Packaging and Literature)

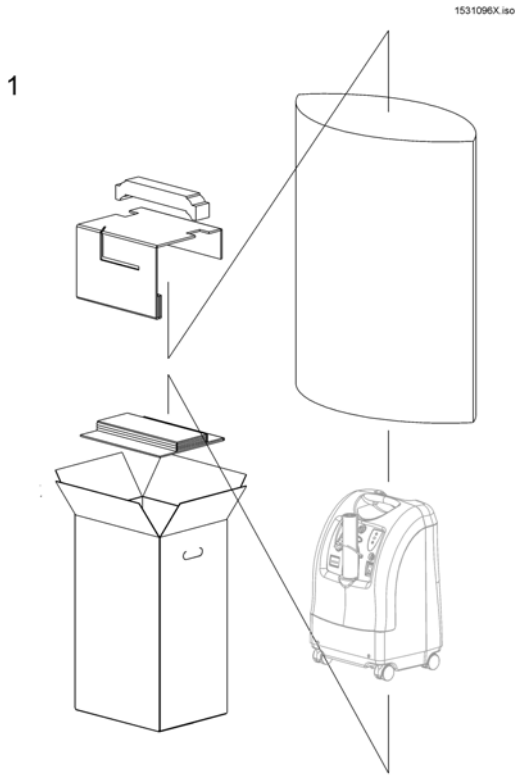

1	SP1602085	(Packaging Perfecto2(V) for Service, cpl) *Includes Carton, Inserts (Top, Bottom, Foam) and poly bag*	1
	1155259	(Kit,Label Northern Europe P2AW) *Includes Manual and Text Label for French, Italian, German, Polish & Czech*	1
	1155260	Perfecto2 sticker en gebruiksaanwijzing *Includes Manual and Text Label for French, Italian, Spanish, Dutch, Greek & Portuguese*	1
	1155261	(Kit,Label Scandinavian P2AW) *Includes Manual and Text Label for Danish, Swedish, Norwegian & Finnish*	1

(Shroud top)

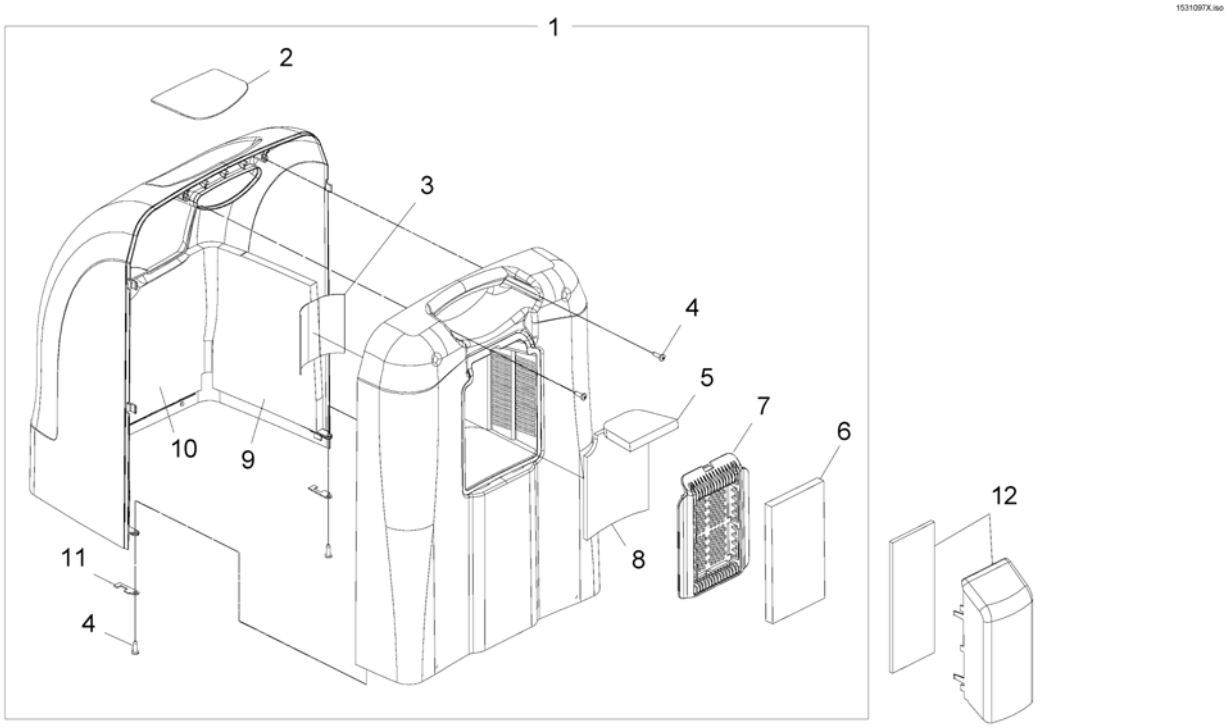

1	1154095	PerfectO2 bovenkap *Includes Cabinet and Items 2 - 11*	1
2	1150725	(Label,Text P2AW-English)	1
3	1137267	(LABEL, DIAGNOSTIC CONCEN)	1
4	1108810	(Screw (10-16 x 5/8"))	1
5	1153695	(Foam, Inlet - Ceiling)	1
6	1143492	PerfectO2 cabinetfilter	1
7	1161831	PerfectO2 cabinet access	1
8	1153700	(Foam,Inlet - Wall)	1
9	1154029	(Foam,Shroud - Side)	1
10	1143464	(Foam,Shroud - Front)	1
11	1143550	(Clip, Retainer)	1
12	1156532	PerfectO2 inlaatfilterkap ps *Includes Inlet Foam and Scoop*	1

(Shroud bottom)

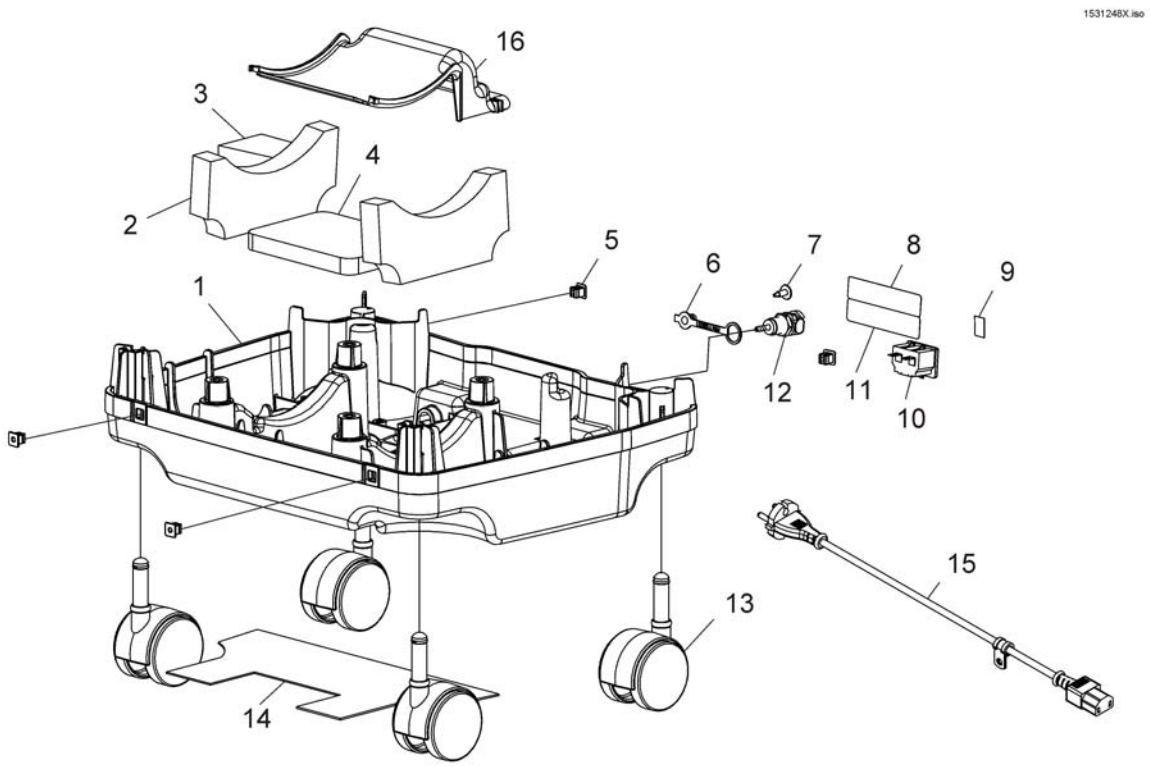

1	1143451	Perfecto2 onderkap *Includes Base Only*	1
2	1153706	(Foam, Dampening - Base)	1
3	1154501	(Foam, Resonator)	1
4	1153705	(Foam, Dampening Outlet Base)	1
5	2000360	(Grommet)	1
6	1108211	Platinum stofkapje	1
7	1156530	PerfectO2 schroef Phillips rond washer drill	1
9	1136841	(Label, Recycling)	1
10	1105515	Platinum power connector	1
11	1143250	(Label, European Rep Address)	1
12	1104151	HomeFill verbindingslang connector ps	1
13	1110426	Platinum wielen 2inch	1
14	1153704	(Damper, Sound Base)	1
15	1156533	PerfectO2 netsnoer+clip en trekontlasting ps	1
16	1143444	(Baffle, Exhaust)	1

(Compressor and Mounting Hardware)

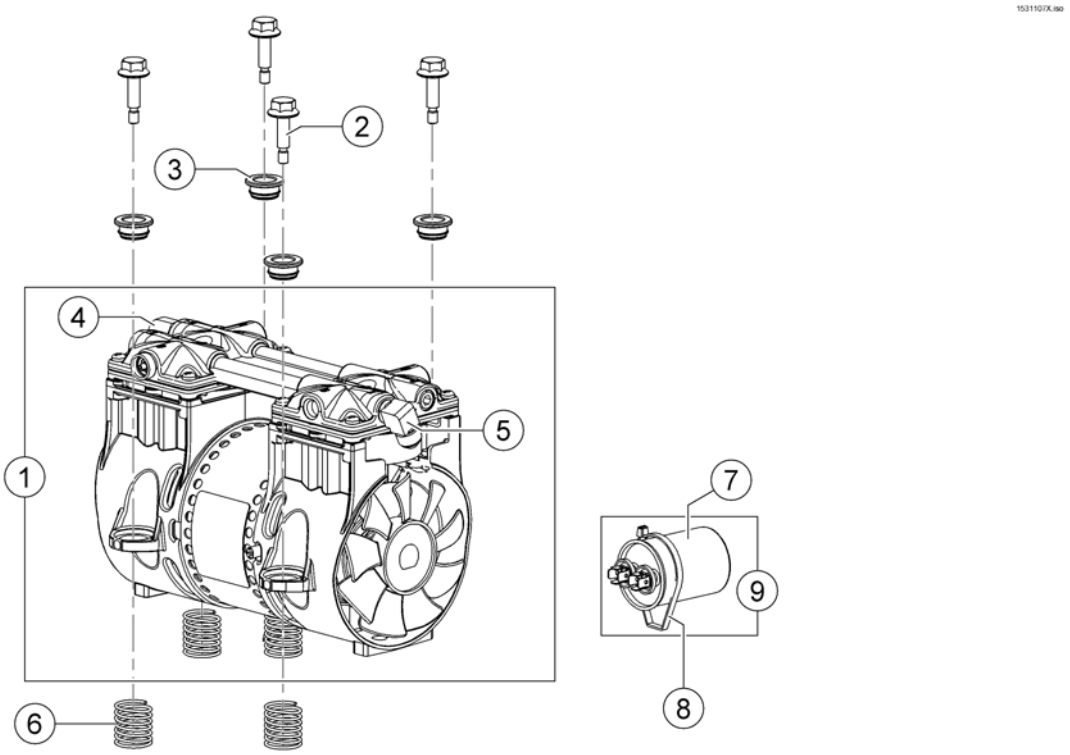

-	1153688	(Kit,Compressor Rebuild w/ Instruction Sheet)	1
1	1154100	PerfectO2 compressor *Includes (1) Compressor, and Items 2-4. You will a*	1
2	1143461	PerfectO2 compressorbout	1
3	1143462	PerfectO2 compressorbus	1
4	1108819	Platinum fitting knie	1
5	1143489	(Elbow, Male Flare)	1
6	1143460	PerfectO2 compressorveer	1
7	1099804	Platinum 9 condensator kit MFD 1	1
8	1018239	(Cable Tie (17-1/2"L))	1
9	1131250	PerfectO2 condensator 10 mF	1

(Control Panel and P.C. Board)

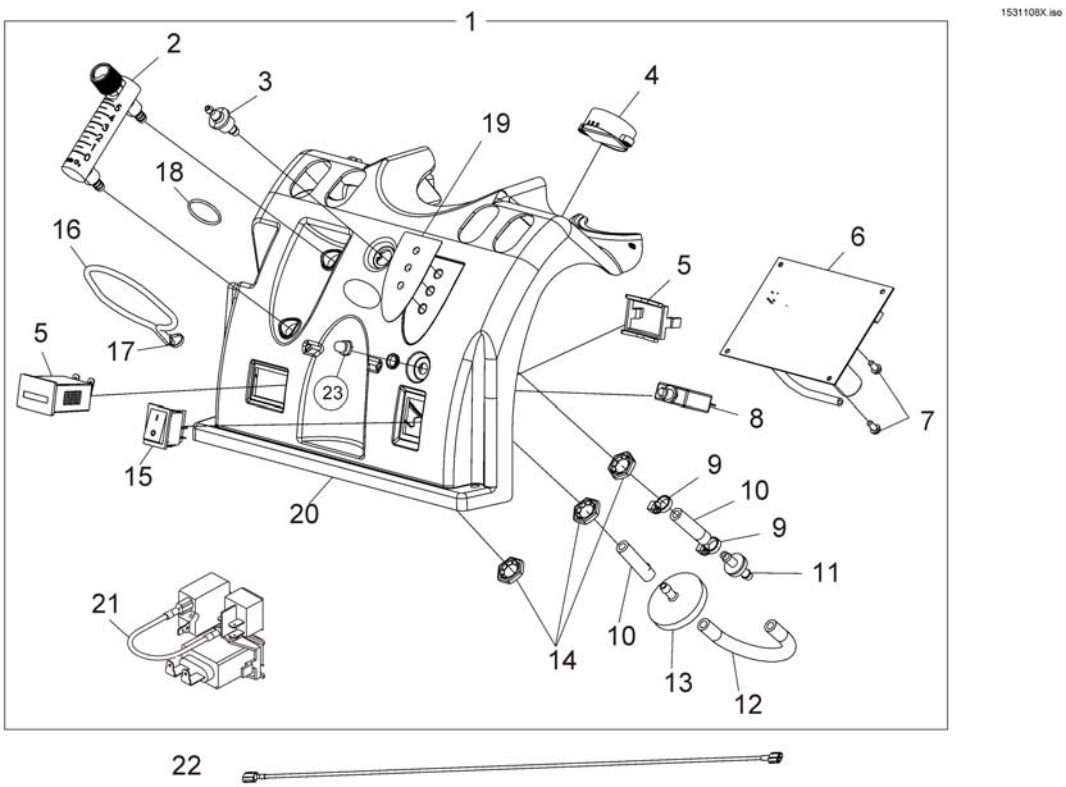

0	1143526	(Wire Harness Valve Assembly (Connects to PC Board))	0
1	1154098	(Control Panel w/ SenseO2 Assembly -PO2AW)	1
2	1110561	Zuurstof flowmeter Platinum/Perfecto2 5L	1
3	1180107	PerfectO2 slang tule messing	1
4	1143503	PerfectO2 alarm cpl	1
5	2002939	Platinum urenteller	1
6	1143486	PerfectO2 printplaat ps	1
7	1143499	(Screw, Phillips Hex Washer Head (8-16 x 3/8"))	1
8	1110824	Platinum zekering 4 Amp.	1
9	2001682	Platinum trekbandjes 8"	1
10	1110473	Platinum tubing pvc (1/4x1-3/4)	1
11	2000460	Platinum valve check	1
12	1143144	PerfectO2 bacteriefilterslang	1
13	P0750X030	PerfectO2 bacteriefilter ps	1
14	2000507	Platinum plug 9/16-18	1
15	1139950	Zuurstof aan/uit schakelaar PO2/PS ps	1
16	1008547	Zuurstof elastiek 31cm Perfecto2/Platinum 9/S	1
17	1006525	Zuurstof tie-wrap 3-7/8	1
18	1095497	(Decal, Invacare Logo)	1
19	1143479	PerfectO2 label voro LED	1
20	1143469	(Panel, Control)	1
21	2001764	(WIRE HARNESS, JUMPER)	1
22	1143501	(Power Jumper Assembly)	1
23	1112562	(Seal, Circuit breaker)	1
	1154101	(Main Harness Assembly (Connects to PC Board))	1

(Sound Box Assembly)

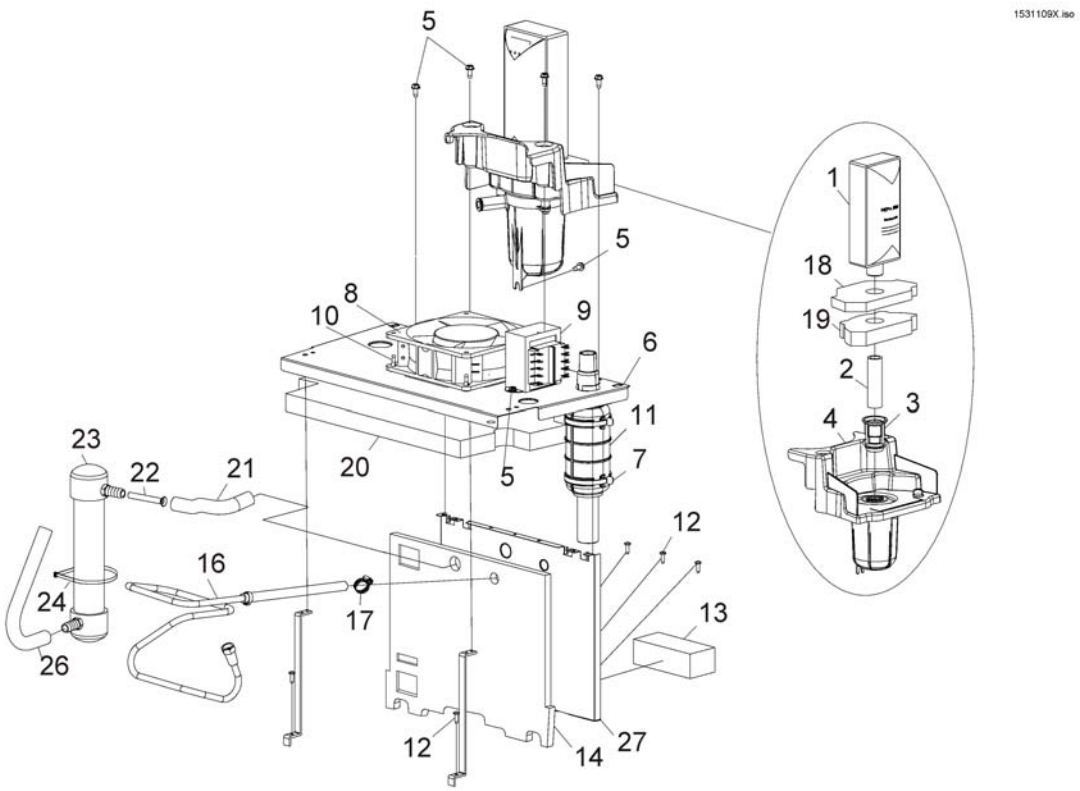

1	1131249	Platinum inlaat filter geluiddempend	1
2	1153703	(Tube (1/2x2-3/4)")	1
3	1106675	(Coupling, Inlet Filter)	1
4	1143435	PerfectO2 inlaatdemper	1
5	1128404	(SCREW, 8-32 X .375 PH HX)	1
6	1143473	(Soundbox, Horizontal)	1
7	2001682	Platinum trekbandjes 8"	1
8	1136943	PerfectO2 ventilator	1
9	1153690	PerfectO2 transformator 20v ps	1
10	1143491	(Rivet, Isolator Mount)	1
11	1143554	PerfectO2 geluiddemper	1
12	1108810	(Screw (10-16 x 5/8"))	1
13	1147917	(Mount, Foam Valve 4-Way)	1
14	1154030	(Foam, Soundbox - Vertical)	1
16	1186169	(Heat Exchanger)	1
17	1143582	(Clamp, Hose Adjustable (3/8)")	1
18	1153693	(Foam,Resonator-Top)	1
19	1153694	(Foam,Resonator-Bottom)	1
20	1153699	PerfectO2 sound box ceiling foam ps	1
21	1153707	(Tube, Resonator Inlet Preformed)	1
22	1153692	(Tube, Inlet Silencer)	1
23	1153788	PerfectO2 compressordemper	1
24	2001682	Platinum trekbandjes 8"	1
26	1153708	(Tube, Resonator Outlet Preformed)	1
27	1143445	(Soundbox, Vertical)	1

(Sieve Bed Assembly and Product Tank)

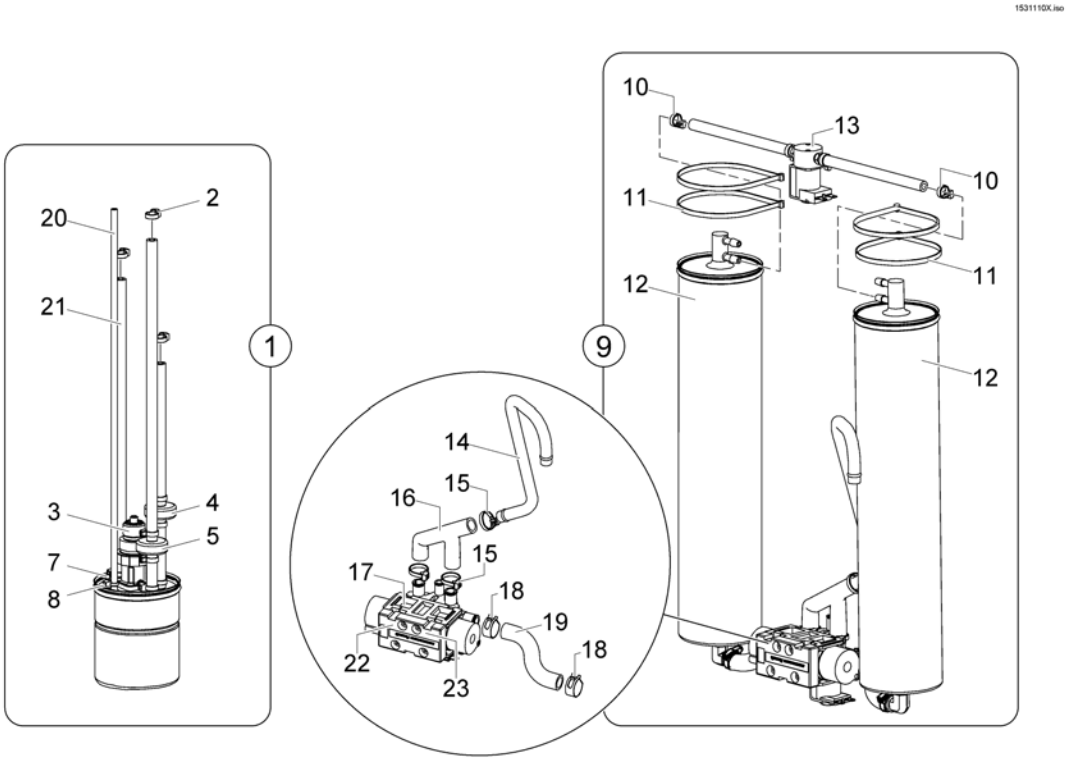

1	1182227	(Product Tank with SensO2 Regulator)	1
2	2001682	Platinum trekbandjes 8"	3
3	1179672	(Regulator Kit for Concentrator)	1
3	1182500	PerfectO2 drukregeling set	1
4	1143544	HomeFill check valve met slang maat 1	1
5	1182170	(Check Valve Assembly)	1
7	1157641	(Restrictor,Teal)	1
8	1070050	(Tie Wrap)	1
9	1585152	(Kit, Sieve Beds (Pair)) *Includes items 10-12*	1
10	2001682	Platinum trekbandjes 8"	2
11	1018239	(Cable Tie (17-1/2"L))	1
12	1184908	PerfectO2 sieve bed ps	2
13	1143578	PerfectO2 2-wegklep ps	1
14	1143447	(Tube Exhaust)	1
15	2001682	Platinum trekbandjes 8"	3
16	1143446	PerfectO2 F-buis ps	1
17	1143556	PerfectO2 4-wegklep	1
18	P0876X026	(Clamp, Hose)	2
19	1188708	(Tube Preformed (1/2"))	1
20	1189123	(Tube, 12.75")	1
21	1189115	(Tube, 24")	1
22	1143436	(Air Manifold)	1
23	2003052	(Pilot operated valve)	1

(Accessories)

1527156X.jpg

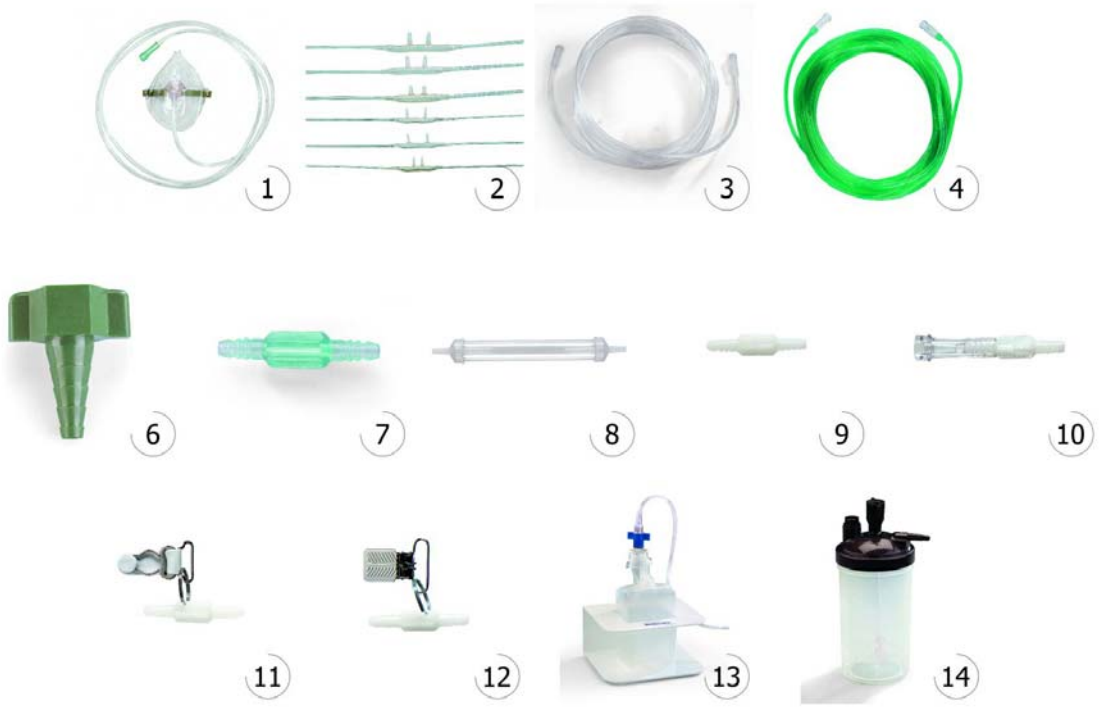

0	M5000P	(Filter Kit (5.000 Operating hours) Platinum)	0
1	M3210	Zuurstofmasker volwassenen 2,1m	1
2	M3117	Zuurstof neussonde Micro 3l/min 1,2m	1
2	M3115	Zuurstof neussonde Micro 3l/min 2,1m	1
2	1498231	Zuurstof neussonde 1,2mm (salter 1056)	1
2	1524235	Zuurstof neussonde high flow 1,2m	1
2	M3120	Zuurstof neussonde std 2,1m	1
2	1524236	Zuurstof neussonde high flow 2,1m	1
2	1509581	Zuurstof neussonde high flow 15,2m	1
2	M3110	Zuurstof neussonde Quiet 8l/min 2,1m	1
2	M3122	Zuurstof neussonde baby 2,1m	1
2	M3121	Zuurstof neussonde kind 2,1m	1
3	1513831	Zuurstofslang verlengstuk 2,1m	1
3	M4150	Zuurstofslang verlengstuk 4,5m	1
3	M4250	Zuurstofslang verlengstuk 7,6m	1
3	M1522	Zuurstofslang verlengstuk 15,2m	1
6	M4610	Zuurstof verbindingsstuk zuurstoftank universeel	1
7	M4650	Zuurstofslang verbindingsstuk	1
8	M1523	Zuurstof condensatie verzamelaar	1
9	M1220	Zuurstof salter draaib.verb.man/man.aansl.	1
10	M1225	Zuurstof salter verb.draaib.man/vrouw aansl.	1
11	M1222	Zuurstof verb.stuk draaibaar + klem delic.	1
12	M1221	Zuurstof verb.stuk draaibaar + klem	1
13	M1521	Zuurstofhouder tbv.bevochtiger (M5120) ps	1
14	M5120	Platinum S standaard luchtbevochtiger	1
14	1509582	Platinum 9 standaard luchtbevochtiger	1
	1110768	Zuurstof luchtbevochtigingslang ps	1
	M1001NP	(Refurbishment Invacare5-O2-Platinum) *Includes M3120, M3210, M5120, 2000799 & M5000P*	1
	1527501-M5PO2	PerfectO2 filterkit *Includes: 1143492 & 1131249*	1

(Accessories)

1527501-M1NPO2	(Refurbishment Kit PO2 and PO2V) *Includes: 1143492, 1110768, M3120, M5120 & 1131249*	1

Yes, you can.®

NL

Belgium & Luxemburg:
Invacare nv, Autobaan 22, B-8210 Loppem
Tel: (32) (0)50 83 10 10, Fax: (32) (0)50 83 10 11
belgium@invacare.com / www.invacare.be

Denmark:
Invacare A/S, Sdr. Ringvej 37, DK-2605 Brøndby
Tel: (45) (0)36 90 00 00, Fax: (45) (0)36 90 00 01
denmark@invacare.com / www.invacare.dk

Deutschland:
Invacare Aquatec GmbH, Alemannenstraße 10, D-88316 Isny
Tel: (49) (0)75 62 7 00 0, Fax: (49) (0)75 62 7 00 66
info@invacare-aquatec.com / www.invacare-aquatec.de

European Distributor Organisation:
Invacare, Kleiststraße 49, D-32457 Porta Westfalica
Tel: (49) (0)57 31 754 540, Fax: (49) (0)57 31 754 541
edo@invacare.com / www.invacare.eu.com

España:
Invacare SA, c/Areny s/n, Polígon Industrial de Celrà, E-17460 Celrà (Girona)
Tel: (34) (0)972 49 32 00, Fax: (34) (0)972 49 32 20
contactsp@invacare.com / www.invacare.es

France:
Invacare Poirier SAS, Route de St Roch, F-37230 Fondettes
Tel: (33) (0)2 47 62 64 66, Fax: (33) (0)2 47 42 12 24
contactfr@invacare.com / www.invacare.fr

Ireland:
Invacare Ireland Ltd, Unit 5 Seatown Business Campus, Seatown Road, Swords, County Dublin - Ireland
Tel: (353) 1 810 7084, Fax: (353) 1 810 7085
ireland@invacare.com / www.invacare.ie

Italia:
Invacare Mecc San s.r.l., Via dei Pini 62, I-36016 Thiene (VI)
Tel: (39) 0445 38 00 59, Fax: (39) 0445 38 00 34
italia@invacare.com / www.invacare.it

Nederland:
Invacare BV, Celsiusstraat 46, NL-6716 BZ Ede
Tel: (31) (0)318 695 757, Fax: (31) (0)318 695 758
nederland@invacare.com, csede@invacare.com / www.invacare.nl

Norge:
Invacare AS, Grensesvingen 9, Postboks 6230, Etterstad, N-0603 Oslo
Tel: (47) (0)22 57 95 00, Fax: (47) (0)22 57 95 01
norway@invacare.com, island@invacare.com / www.invacare.no

Österreich:
Invacare Austria GmbH, Herzog Odilostrasse 101, A-5310 Mondsee
Tel: (43) 6232 5535 0, Fax: (43) 6232 5535 4
info-austria@invacare.com / www. invacare.at

Portugal:
Invacare Lda, Rua Estrada Velha, 949, P-4465-784 Leça do Balio
Tel: (351) (0)225 1059 46/47, Fax: (351) (0)225 1057 39
portugal@invacare.com / www.invacare.pt

Sverige & Suomi:
Invacare AB, Fagerstagatan 9, S-163 91 Spånga
Tel: (46) (0)8 761 70 90, Fax: (46) (0)8 761 81 08
sweden@invacare.com, finland@invacare.com / www.invacare.se

Switzerland:
Invacare AG, Benkenstrasse 260, CH-4108 Witterswil
Tel: (41) (0)61 487 70 80, Fax: (41) (0)61 487 70 81
switzerland@invacare.com / www.invacare.ch

United Kingdom:
Invacare Limited, Pencoed Technology Park, Pencoed, Bridgend CF35 5AQ
Switchboard Tel: (44) (0)1656 776200, Fax: (44) (0)1656 776201
Customer services Tel: (44) (0)1656 776222, Fax: (44) (0)1656 776220
uk@invacare.com / www.invacare.co.uk

2011-08-17

© Invacare® International Sarl 2017. All Rights Reserved.