STEEL MOMENT RESISTING CONNECTIONS SUBJECT TO EARTHQUAKE LOADING

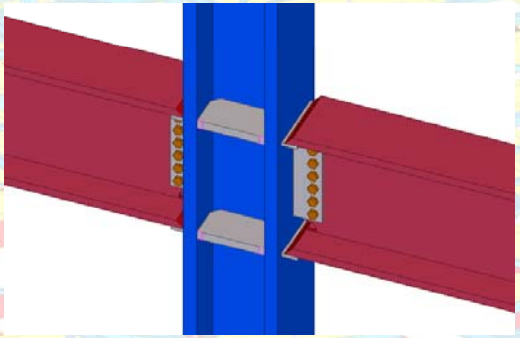

ENCE 710
STEEL STRUCTURES

Kirk P. Volovar, P.E. & C. C. Fu, P.E.

STEEL MRF SEISMIC CONNECTION INTRO AND PRESENTATION OVERVIEW

- Early development of steel moment connections
- Evolution to prequalified standard seismic steel moment connections
- Recent prescriptive seismic moment connection failures
- New AISC Seismic Provisions and prequalified connections

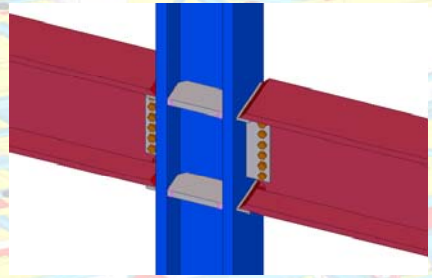

Ref: the AISC Seismic Provisions free at http://www.aisc.org/

Ref: FEMA 350 free at http://www.fema.gov

EARLY DESIGN INFORMATION

- Early built up shapes gave way to rolled shapes and riveted connections in the 1920s
- Riveted steel connections: 1920s through the 1950s
  - Angle and tee flange connections
- 1960s and 1970s earthquake resistant design philosophies began to be developed
- Buildings with these riveted connections performed satisfactorily when subjected to seismic loads
- No documented failures of these connections during the recent large-scale earthquake at Northridge in the United States

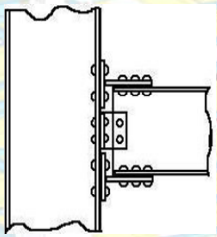

T-Stub Connection

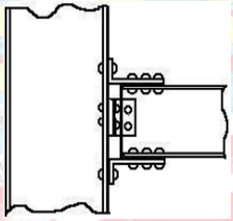

Clip Angle Connection

RIVETED MOMENT CONNECTION PERFORMANCE

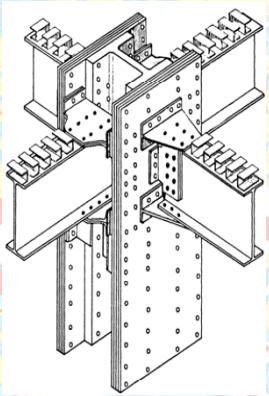

- Results of later cyclic testing performed on the tee stub and clip angle riveted connections include the following:
  - Performed as partially restrained connections with the T-stub connector being stiffer
  - Good rotational capacity
  - The failure mode or yield mechanism had a direct correlation to the connection ductility
  - The fireproofing concrete encasement of the steel sections increased connection strength through composite action
- Good connection performance attributed to:
  - Utilization at all beam to column interfaces
  - Steel frames infilled with masonry partitions
  - Steel generally encased in concrete for fire resistance

PREQUALIFIED BOLTED/WELDED CONNECTIONS (1960s THROUGH NORTHRIDGE)

- **Prescriptive Moment Connection**
  - Welded flange and bolted web
  - Adopted by UBC in 1970s
- Expected to have good ductile behavior
- Develop full plastic moment of beam

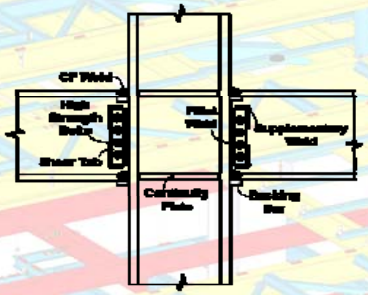

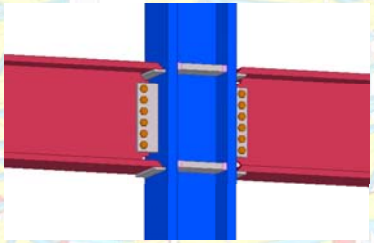

- Monotonic and cyclic loading tests predominantly showed the connection as ductile with more than adequate rotation
- These tests formed the basis for the prequalified welded flange-bolted web fully restrained moment connection and further defined the design requirements
- Prequalified for all seismic demands

SMF CONNECTION EVOLUTION

The prequalified welded flange-bolted web moment resisting connection remained the standard despite changes within the steel industry standard design practice. Notably the following changes took place [Stojadinovic et al, 2000]:

- The moment connections were reduced from every connection to very few due to the labor costs involved in producing the connections;
- The number of moment resisting frames present in buildings were reduced to a minimum of one in each orthogonal direction with the remaining only shear connections compared to the past which had all frames resisting lateral forces;
- The moment resisting frames were moved toward the outside of the structure;
- Greater loading, longer spans and fewer moment resisting frames required much larger columns and deeper beams than tested in the past;
- The yield and ultimate strength of steel increased;
- Bolting the shear tab to the beam web without supplemental welds became the norm due to economic considerations;
- The welding process was changed from shielded metal arc welding (SMAW) to self-shielded flux core metal arc welding (FCAW) during the 1970s.

These changes led to under designed connections that were not tested in their exact condition

NORTHRIDGE FAILURES

- The Northridge, California earthquake of January 1994 and later the Kobe, Japan earthquake of January 1995 caused brittle fractures in many cases within the prequalified connections at very low levels of plastic demand
- Led to later investigation of structures subjected to previous earthquakes
- The experimental results from the 1970s through the present were evaluated
- There were also numerous factors observed in the field that contributed to the failure of these connections

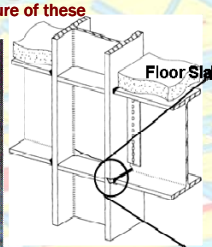

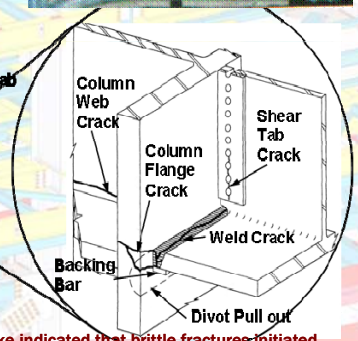

- Inspection of the structures after the Northridge earthquake indicated that brittle fractures initiated within the connections at very low levels of plastic demand and in some cases while the structure remained elastic
- Commonly initiated at the complete joint penetration (CJP) weld

SAC JOINT VENTURE

Structural Engineers Association of California (SEAOC)
Applied Technology Council (ATC)
California Universities for Research in Earthquake engineering (CUREe)

Before Northridge
- Steel buildings considered to be "invulnerable"
- Best earthquake resisting system

After Northridge
- "Pre-qualified" connections withdrawn
- Interim Guidelines, workshops/conferences
- New connections to be validated by testing

After 2000
- Improved prescriptive connections
- FEMA 350: Recommendations
- 2002 AISC Seismic Provisions

SAC I: STUDY OF OLD/NORTHRIDGE FAILURES

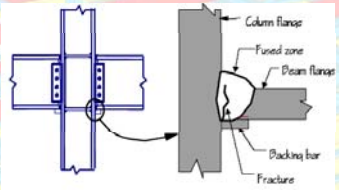

Typical Fracture initiated at the CJP at the bottom flange [FEMA350]

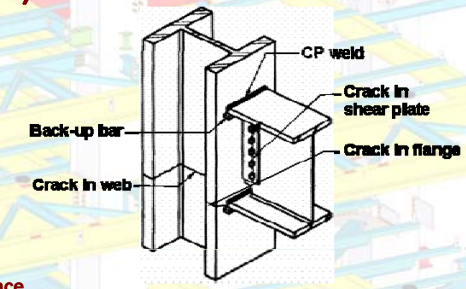

- Greatest stresses at the column to beam interface
- Bottom flange weld is a down hand weld performed by welder sitting on top of beam
- Difficult visual as well as ultrasonic inspection.
- Excessively weak panel zones result in local kinking of the column flanges and significant demand on the CJP weld between the beam and column flanges
- Severe strain concentrations can occur at the weld access holes for the beam flanges
- Change in the welding method produced welds with low toughness and welders were able to deposit more weld in one pass, which led to large weld defects
- Lateral force resisting systems evolved to utilize less moment frames than in the past requiring the use of deeper beams and heavier columns
- Use of recycled scrap metal resulted in steel with much greater yield strength than required which led to under designing the connections

SAC PROJECT II: NEW PROVISIONS AFTER NORTHRIDGE

- Part II of the SAC project: develop guidelines for future steel moment connection detailing and design to improve their performance
  - Provide a controlled yield mechanism and failure mode for each recommended and prequalified connection
  - The connections shall allow the building to sustain large inelastic deformations without collapse or loss of life during major earthquakes
- SAC finding published by FEMA (350) and utilized by AISC to produce the Seismic Provisions

7.2 BOLTED JOINTS

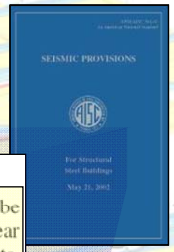

7.2. Bolted Joints

All bolts shall be pretensioned high-strength bolts. All faying surfaces shall be prepared as required for Class A or better Slip-Critical Joints. The design shear strength of bolted joints is permitted to be calculated as that for bearing-type joints.

Bolted joints shall not be designed to share load in combination with welds on the same faying surface.

The bearing strength of bolted joints shall be provided using either standard holes or short-slotted holes with the slot perpendicular to the line of force, unless an alternative hole type is justified as part of a tested assembly; see Appendix S.

The Design Strength of bolted joints in shear and/or combined tension and shear shall be determined in accordance with LRFD Specification Sections J3.7 and J3.10, except that the nominal bearing strength at bolt holes shall not be taken greater than $2.4dtF_u$.

Bolted connections for members that are a part of the Seismic Load Resisting System shall be configured such that a ductile limit-state either in the connection or in the member controls the design.

ZONE OF PLASTIC DEFORMATION

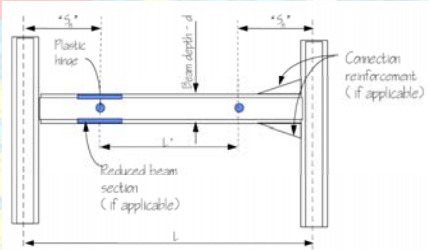

Location of plastic hinge formation (S_h)

- S_h value Identified within each prequalified connections
- Welded, bolted, screwed or shot-in attachments, exterior facades, partitions, ductwork, piping or other construction openings shall not be placed within the expected zone of plastic deformation due to the regions sensitivity to discontinuities

INTERSTORY DRIFT/DESIGN

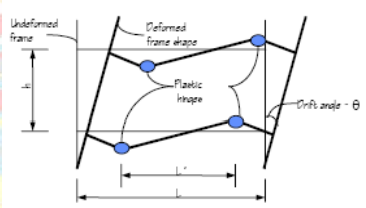

Inelastic Behavior of Frames with Hinges in Beam Span [FEMA350]

- Achieved through combination of elastic deformation and development of plastic hinges
- Shall be capable of sustaining a drift angle of at least 0.04 radians

Strong-Column-Weak-Beam

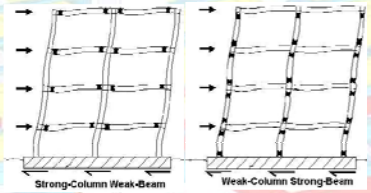

TABLE I-6-1
R_y Values for Different Member Types

Application	R_y
Hot-rolled structural shapes and bars	
ASTM A36/A36M	1.5
ASTM A572/A572M Grade 42 (290)	1.3
ASTM A992/A992M	1.1
All other grades	1.1
Hollow Structural Sections	
ASTM A500, A501, A618 and A847	1.3
Steel Pipe	
ASTM A53/A53M	1.4
Plates	1.1
All other products	1.1

6.2. Material Properties for Determination of Required Strength

When required in these Provisions, the Required Strength of a connection or member shall be determined from the Expected Yield Strength $R_y F_y$, of the connected member, where F_y is the specified minimum yield strength of the grade of steel to be used. For rolled shapes and bars, R_y shall be as given in Table I-6-1. Other values of R_y are permitted to be used if the value of the Expected Yield Strength is determined by testing that is conducted in accordance with the requirements for the specified grade of steel.

When both the Required Strength and the Design Strength calculations are made for the same member or connecting element, it is permitted to apply R_y to F_y in the determination of the Design Strength.

BEAM-TO-COLUMN PANEL ZONE

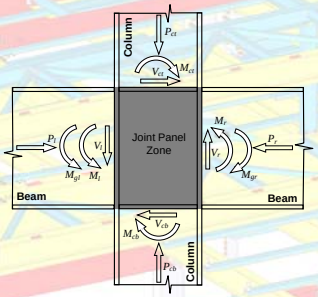

Internal forces on JPZ
(axial, shearing, flexure)

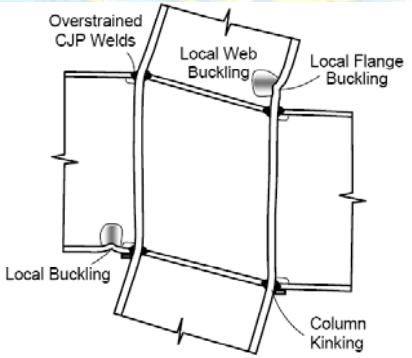

- Effects of JPZ shear distortion: Local buckling in the beam and column flanges due to excessive distortion of the JPZ. This can lead to fracture of the CJP groove welds due to the high strains and increased story drift leading to more damage, greater susceptibility to P-Δ effects and large permanent offsets of building frames.
- Shear yielding of the JPZ shall initiate at the same time as flexural yielding of the beam elements or proportioned so that all yielding occurs in the beam.

WELDED UNREINFORCED FLANGE BOLTED WEB (WUF-B) CONNECTION

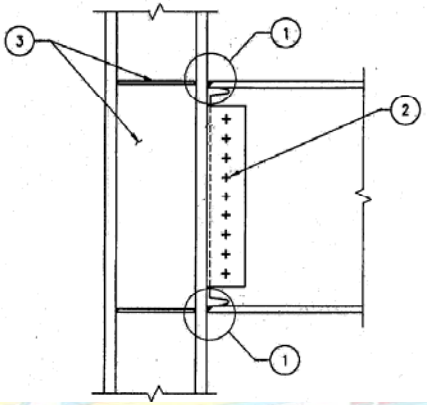

Geometric Limits of FEMA 350 prequalified connection [FEMA 350]					
Type	Frame	Maximum Beam Size	Min. Span (l)to Depth (d_b) Ration (l/d_b)	Max. Beam Flange Thickness (t_{bf}) in	Max. Column Size
WUF-B	OMF	W36	7	1	W8,W10,W12,W14

WELDED UNREINFORCED FLANGE WELDED WEB (WUF-W) CONNECTION

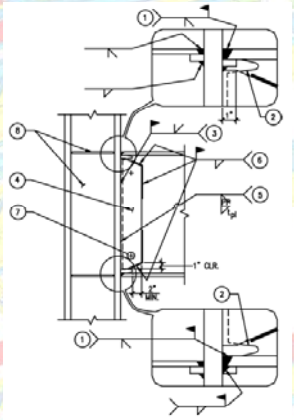

Geometric Limits of FEMA 350 prequalified connection [FEMA 350]					
Type	Frame	Maximum Beam Size	Min. Span (l)to Depth (d_b) Ration (l/d_b)	Max. Beam Flange Thickness (t_{bf}) in	Max. Column Size
WUF-W	OMF	W36	5	1.5	No Limit
	SMF	W36	7	1	W12, W14

WELDED FREE FLANGE (FF) CONNECTION

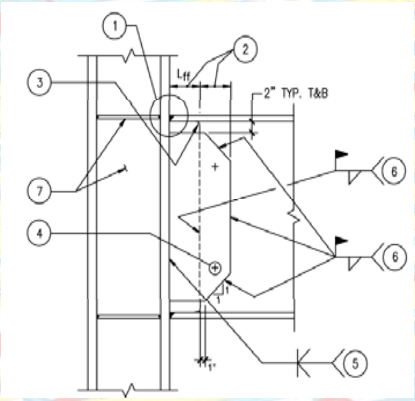

Geometric Limits of FEMA 350 prequalified connection [FEMA 350]					
Type	Frame	Maximum Beam Size	Min. Span (l)to Depth (d_b) Ration (l/d_b)	Max. Beam Flange Thickness (t_{bf}) in	Max. Column Size
WFF	OMF	W36	5	1.25	No Limit
	SMF	W30	7	0.75	W12, W14

REDUCED BEAM SECTION (RBS) CONNECTION

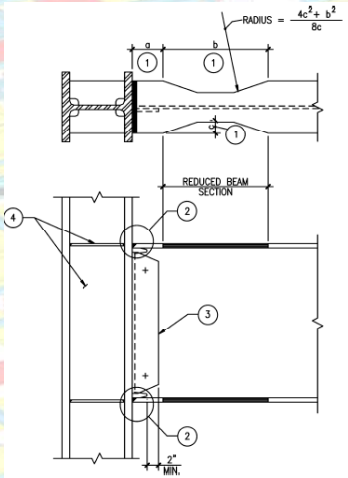

Geometric Limits of FEMA 350 prequalified connection [FEMA 350]					
Type	Frame	Maximum Beam Size	Min. Span (l)to Depth (d_b) Ration (l/d_b)	Max. Beam Flange Thickness (t_{bf}) in	Max. Column Size
RBS	OMF	W36	5	1.75	No Limit
	SMF	W36	7	1.75	W12, W14

WELDED FLANGE PLATE (WFP) CONNECTION

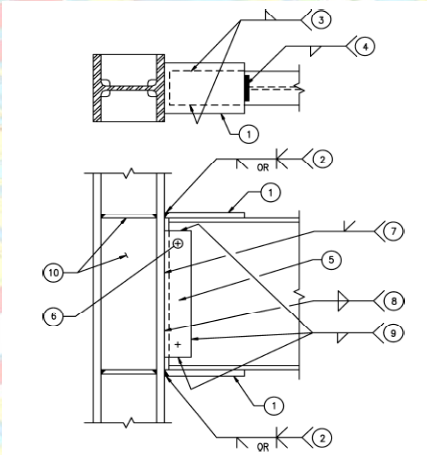

Geometric Limits of FEMA 350 prequalified connection [FEMA 350]					
Type	Frame	Maximum Beam Size	Min. Span (l)to Depth (d_b) Ration (l/d_b)	Max. Beam Flange Thickness (t_{bf}) in	Max. Column Size
WFP	OMF	W36	5	1.5	No Limit
	SMF	W36	7	1	W12, W14

BOLTED UNSTIFFENED END PLATE (BUEP) CONNECTION

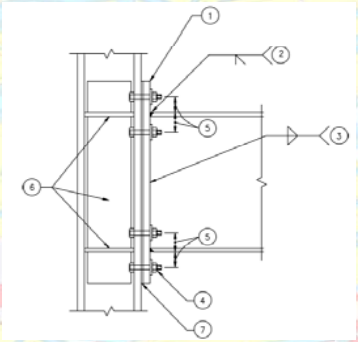

Geometric Limits of FEMA 350 prequalified connection [FEMA 350]					
Type	Frame	Maximum Beam Size	Min. Span (l)to Depth (d_b) Ration (l/d_b)	Max. Beam Flange Thickness (t_{bf}) in	Max. Column Size
BUEP	OMF	W30	5	0.75	No Limit
	SMF	W24	7	0.75	W8,W10,W12,W14

BOLTED STIFFENED END PLATE CONNECTION (BSEP)

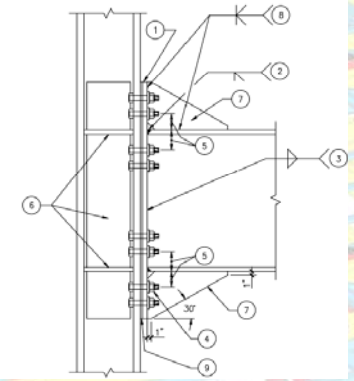

Geometric Limits of FEMA 350 prequalified connection [FEMA 350]					
Type	Frame	Maximum Beam Size	Min. Span (l)to Depth (d_b) Ration (l/d_b)	Max. Beam Flange Thickness (t_{bf}) in	Max. Column Size
BSEP	OMF	W36	5	1	No Limit
	SMF	W36	7	1	W12, W14

BOLTED FLANGE PLATE (BFP) CONNECTION

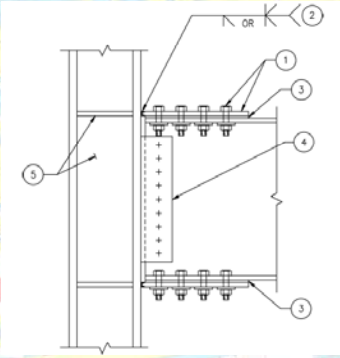

Geometric Limits of FEMA 350 prequalified connection [FEMA 350]					
Type	Frame	Maximum Beam Size	Min. Span (l)to Depth (d_b) Ration (l/d_b)	Max. Beam Flange Thickness (t_{bf}) in	Max. Column Size
BFP	OMF	W36	5	1.25	No Limit
	SMF	W30	8	0.75	W12, W14

DOUBLE SPLIT TEE (DST) CONNECTION

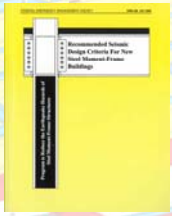

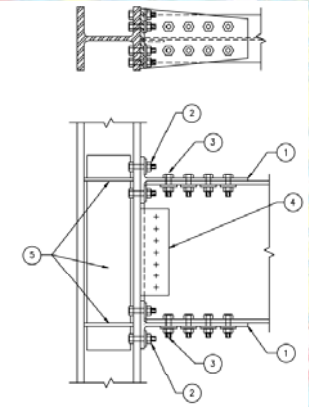

Geometric Limits of FEMA 350 prequalified connection [FEMA 350]					
Type	Frame	Maximum Beam Size	Min. Span (l)to Depth (d_b) Ration (l/d_b)	Max. Beam Flange Thickness (t_{bf}) in	Max. Column Size
DST	OMF	W36	5	---	No Limit
	SMF	W24	8	---	W12, W14