Tranquility 27® (TT) Series
Tranquility 20 (TS) Series
Tranquility 16 (TC) Series
Tranquility (TR) Series

Commercial
Horizontal & Vertical
Packaged Water-Source
Heat Pumps - 60 Hz

INSTALLATION, OPERATION & MAINTENANCE

97B0075N01

Rev.: 03 January, 2011

ClimateMaster®
Water-Source Heat Pump Systems

Table of Contents

This Page Intentionally Left Blank

Model Nomenclature
General Overview For All H & V Series

1 2	3	4 5 6	7	8	9	10	11	12	13	14	15
TT	V	026	A	G	C	1	0	C	L	K	S

Model Type
TT = Tranquility Two Stage Scroll
TS = Tranquility Single Stage Scroll
TC = Tranquility Compact
TR = Tranquility High Efficiency

Configuration
V = Vertical Upflow
H = Horizontal
D = Vertical Downflow

Unit Size, MBtuh

Revision Level

Voltage
E = 265/60/1
F = 460/60/3
G = 208-230/60/1
H = 208-230/60/3
N = 575/60/3

Controls

	60Hz Units	
	CXM	DXM
Standard	C	D
LON DDC	L	M
MPC DDC	N	P

Cabinet Insulation
See model nomenclature for specific options

Water Circuit Options
See model nomenclature for specific options

Heat Exchanger & Valve Options
See model nomenclature for specific options

Return Air
L = Left Return
R = Right Return

Supply Air & Motor Option
See model nomenclature for specific options

Standard
S = Standard

NOTE: Some options/configurations not availaible on all series. Please consult Engineering Guides for model specific options.

Note: Above model nomenclature is a general reference. Consult individual engineering guides for detailed information.

General Information

Safety

Warnings, cautions, and notices appear throughout this manual. Read these items carefully before attempting any installation, service, or troubleshooting of the equipment.

DANGER: Indicates an immediate hazardous situation, which if not avoided will result in death or serious injury. DANGER labels on unit access panels must be observed.

WARNING: Indicates a potentially hazardous situation, which if not avoided could result in death or serious injury.

CAUTION: Indicates a potentially hazardous situation or an unsafe practice, which if not avoided could result in minor or moderate injury or product or property damage.

NOTICE: Notification of installation, operation, or maintenance information, which is important, but which is not hazard-related.

⚠ WARNING! ⚠

WARNING! The EarthPure® Application and Service Manual should be read and understood before attempting to service refrigerant circuits with HFC-410A.

⚠ WARNING! ⚠

WARNING! To avoid the release of refrigerant into the atmosphere, the refrigerant circuit of this unit must be serviced only by technicians who meet local, state, and federal proficiency requirements.

⚠ CAUTION! ⚠

CAUTION! To avoid equipment damage, DO NOT use these units as a source of heating or cooling during the construction process. The mechanical components and filters will quickly become clogged with construction dirt and debris, which may cause system damage.

⚠ WARNING! ⚠

WARNING! The installation of water-source heat pumps and all associated components, parts, and accessories which make up the installation shall be in accordance with the regulations of ALL authorities having jurisdiction and MUST conform to all applicable codes. It is the responsibility of the installing contractor to determine and comply with ALL applicable codes and regulations.

⚠ WARNING! ⚠

WARNING! All refrigerant discharged from this unit must be recovered WITHOUT EXCEPTION. Technicians must follow industry accepted guidelines and all local, state, and federal statutes for the recovery and disposal of refrigerants. If a compressor is removed from this unit, refrigerant circuit oil will remain in the compressor. To avoid leakage of compressor oil, refrigerant lines of the compressor must be sealed after it is removed.

Inspection - Upon receipt of the equipment, carefully check the shipment against the bill of lading. Make sure all units have been received. Inspect the packaging of each unit, and inspect each unit for damage. Ensure that the carrier makes proper notation of any shortages or damage on all copies of the freight bill and completes a common carrier inspection report. Concealed damage not discovered during unloading must be reported to the carrier within 15 days of receipt of shipment. If not filed within 15 days, the freight company can deny the claim without recourse.

Note: It is the responsibility of the purchaser to file all necessary claims with the carrier. Notify your equipment supplier of all damage within fifteen (15) days of shipment.

Storage - Equipment should be stored in its original packaging in a clean, dry area. Store units in an upright position at all times. Stack units a maximum of 3 units high.

Unit Protection - Cover units on the job site with either the original packaging or an equivalent protective covering. Cap the open ends of pipes stored on the job site. In areas where painting, plastering, and/or spraying has not been completed, all due precautions must be taken to avoid physical damage to the units and contamination by foreign material. Physical damage and contamination may prevent proper start-up and may result in costly equipment clean-up.

Examine all pipes, fittings, and valves before installing any of the system components. Remove any dirt or debris found in or on these components.

Pre-Installation - Installation, Operation, and Maintenance instructions are provided with each unit. Horizontal equipment is designed for installation above false ceiling or in a ceiling plenum. Other unit configurations are typically installed in a mechanical room. The installation site chosen should include adequate service clearance around the unit. Before unit start-up, read all manuals and become familiar with the unit and its operation. Thoroughly check the system before operation.

Prepare units for installation as follows:

1. Compare the electrical data on the unit nameplate with ordering and shipping information to verify that the correct unit has been shipped.
2. Keep the cabinet covered with the original packaging until installation is complete and all plastering, painting, etc. is finished.
3. Verify refrigerant tubing is free of kinks or dents and that it does not touch other unit components.
4. Inspect all electrical connections. Connections must be clean and tight at the terminals.
5. Remove any blower support packaging (water-to-air units only).
6. Loosen compressor bolts on units equipped with compressor **spring** vibration isolation until the compressor rides freely on the springs. Remove shipping restraints. (No action is required for compressors with mounted grommets.)
7. Some airflow patterns are field convertible (horizontal units only). Locate the airflow conversion section of this IOM.
8. Locate and verify any hot water generator (HWG), hanger, or other accessory kit located in the compressor section or blower section.

⚠ CAUTION! ⚠

CAUTION! All three phase scroll compressors must have direction of rotation verified at start-up. Verification is achieved by checking compressor Amp draw. Amp draw will be substantially lower compared to nameplate values. Additionally, reverse rotation results in an elevated sound level compared to correct rotation. Reverse rotation will result in compressor internal overload trip within several minutes. Verify compressor type before proceeding.

⚠ CAUTION! ⚠

CAUTION! DO NOT store or install units in corrosive environments or in locations subject to temperature or humidity extremes (e.g., attics, garages, rooftops, etc.). Corrosive conditions and high temperature or humidity can significantly reduce performance, reliability, and service life. Always move and store units in an upright position. Tilting units on their sides may cause equipment damage.

⚠ CAUTION! ⚠

CAUTION! CUT HAZARD - Failure to follow this caution may result in personal injury. Sheet metal parts may have sharp edges or burrs. Use care and wear appropriate protective clothing, safety glasses and gloves when handling parts and servicing heat pumps.

NOTICE! Failure to remove shipping brackets from spring-mounted compressors will cause excessive noise, and could cause component failure due to added vibration.

Unit Physical Data

Tranquility 27® Two-Stage (TT) Series (60Hz Only)

Model	026	038	049	064	072
Compressor (1 Each)	Two-Stage Scroll				
Factory Charge (HFC-410A) (oz) [kg]	58 [1.64]	78 [2.21]	81 [2.30]	144 [4.08]	156 [4.42]
ECM Fan Motor & Blower					
Fan Motor (hp) [W]	1/2 [373]	1/2 [373]	1 [746]	1 [746]	1 [746]
Blower Wheel Size (dia x w) - (in) [mm]	9 x 7 [229 x 178]	11 x 10 [279 x 254]	11 x 10 [279 x 254]	11 x 10 [279 x 254]	11 x 10 [279 x 254]
Water Connection Size					
FPT (in)	3/4	3/4	1	1	1
HWG Connection Size					
FPT (in)	1/2	1/2	1/2	1/2	1/2
Coax Volume					
Volume (US Gallons) [liters]	0.76 [2.88]	0.92 [3.48]	1.24 [4.69]	1.56 [5.91]	1.56 [5.91]
Vertical Upflow/Downflow					
Air Coil Dimensions (h x w) - (in) [mm]	28 x 20 [711 x 508]	28 x 25 [711 x 635]	32 x 25 [813 x 635]	36 x 25 [914 x 635]	36 x 25 [914 x 635]
Standard Filter - 1" [25.4mm] Throwaway, qty (in) [mm]	28 x 24 [711 x 610]	28 x 30 [711 x 762]	2 - 16 x 30 [406 x 762]	1 - 16 x 30 [813 x 762] 1 - 20 x 30 [508 x 762]	1 - 16 x 30 [813 x 762] 1 - 20 x 30 [508 x 762]
Weight - Operating, (lbs) [kg]	266 [121]	327 [148]	416 [189]	443 [201]	443 [201]
Weight - Packaged, (lbs) [kg]	276 [125]	337 [153]	426 [193]	453 [205]	453 [205]
Horizontal					
Air Coil Dimensions (h x w) - (in) [mm]	18 x 31 [457 x 787]	20 x 35 [508 x 889]	20 x 40 [508 x 1016]	20 x 45 [508 x 1143]	20 x 45 [508 x 1143]
Standard Filter - 1" [25.4mm] Throwaway, qty (in) [mm]	2 - 18 x 18 [457 x 457]	1 - 12 x 20 [305 x 508] 1 - 20 x 25 [508 x 635]	1 - 18 x 20 [457 x 508] 1 - 20 x 24 [508 x 610]	2 - 20 x 24 [508 x 610]	2 - 20 x 24 [508 x 610]
Weight - Operating, (lbs) [kg]	266 [121]	327 [148]	416 [189]	443 [201]	443 [201]
Weight - Packaged, (lbs) [kg]	276 [125]	337 [153]	426 [193]	453 [205]	453 [205]

Notes:
All units have TXV expansion device and 1/2" & 3/4" electrical knockouts.
575 volt motors are two speed.

Unit Maximum Water Working Pressure	
Options	Max Pressure PSIG [kPa]
Base Unit	500 [3,445]
Internal Secondary Pump (ISP)	145 [999]
ClimaDry	145 [999]
Internal Motorized Water Valve (MWV)	300 [2,067]
Internal Auto Flow Valve	500 [3,445]

Use the lowest maximum pressure rating when multiple options are combined.

Tranquility 20 Single-Stage (TS) Series (60Hz)

Model	006	009	012	018	024	030	036	042	048	060	070
Compressor (1 Each)	Rotary			Scroll							
Factory Charge HFC-410A (oz) [kg]	24 [0.68]	32 [0.91]	34 [0.96]	50 [1.13]	56 [1.59]	58 [1.64]	70 [1.98]	80 [2.27]	80 [2.27]	136 [3.86]	144 [4.08]
ECM Fan Motor & Blower											
Fan Motor (hp) [W]	N/A	N/A	N/A	1/2 [373]	1/2 [373]	1/2 [373]	1/2 [373]	1/2 [373]	1 [746]	1 [746]	1 [746]
Blower Wheel Size (dia x w) - (in) [mm]	N/A	N/A	N/A	9 x 7 [229 x 178]	9 x 7 [229 x 178]	9 x 7 [229 x 178]	11 x 10 [279 x 254]	11 x 10 [279 x 254]	11 x 10 [279 x 254]	11 x 10 [279 x 254]	11 x 10 [279 x 254]
PSC Fan Motor & Blower (3 Speeds)											
Fan Motor (hp) [W]	1/25 [30]	1/20 [37]	1/8 [93]	1/6 [124]	1/5 [149]	1/3 [249]	1/2 [373]	1/2 [373]	3/4 [560]	1 [746]	1 [746]
High Static Fan Motor (hp) [W]	N/A	N/A	N/A	1/5 [149]	1/3 [249]	1/2 [373]	1/2 [373]	3/4 [560]	3/4 [560]	1 [746]	Not Available
Blower Wheel Size (dia x w) - (in) [mm]	6 X 5 [152 X 127]	6 X 5 [152 X 127]	6 X 5 [152 X 127]	9 x 7 [229 x 178]	9 x 7 [229 x 178]	9 x 7 [229 x 178]	10 x 10 [254 x 254]	10 x 10 [254 x 254]	10 x 10 [254 x 254]	11 x 10 [279 x 254]	11 x 10 [279 x 254]
Water Connection Size											
FPT (in)	1/2”	1/2”	1/2”	3/4”	3/4”	3/4”	3/4”	1”	1”	1”	1”
HWG Connection Size											
FPT (in)	N/A	N/A	N/A	1/2”	1/2”	1/2”	1/2”	1/2”	1/2”	1/2”	1/2”
Coax Volume											
Volume (US Gallons) [liters]	0.17 [0.64]	0.29 [1.10]	0.45 [1.70]	0.56 [2.12]	0.76 [2.88]	0.76 [2.88]	0.92 [3.48]	1.24 [4.69]	1.24 [4.69]	1.56 [5.91]	1.56 [5.91]
Vertical Upflow/Downflow											
Air Coil Dimensions (h x w) - (in) [mm]	16 x 16 [406 x 406] Upflow Only	16 x 16 [406 x 406] Upflow Only	16 x 16 [406 x 406] Upflow Only	24 x 20 [610 x 508]	28 x 20 [711 x 508]	28 x 20 [711 x 508]	28 x 25 [711 x 635]	32 x 25 [813 x 635]	32 x 25 [813 x 635]	36 x 25 [914 x 635]	36 x 25 [914 x 635]
Standard Filter - 1” [25.4mm] Throwaway, qty (in) [mm]	16 x 20 [406 x 508]	16 x 20 [406 x 508]	16 x 20 [406 x 508]	24 x 24 [610 x 610]	28 x 24 [711 x 610]	28 x 24 [711 x 610]	28 x 30 [711 x 762]	2 - 16 x 30 [2 - 406 x 762]	2 - 16 x 30 [2 - 406 x 762]	1 - 16 x 30; 1 - 20 x 30 [1 - 406 x 762; 1 - 508 x 762]	1 - 16 x 30; 1 - 20 x 30 [1 - 406 x 762; 1 - 508 x 762]
Weight - Operating, (lbs) [kg]	126 [57]	146 [66]	150 [68]	252 [114]	266 [121]	268 [122]	327 [148]	414 [188]	416 [189]	441 [200]	443 [201]
Weight - Packaged, (lbs) [kg]	136 [62]	156 [71]	160 [73]	262 [119]	276 [125]	278 [126]	337 [153]	424 [192]	426 [193]	451 [205]	453 [206]
Horizontal											
Air Coil Dimensions (h x w) - (in) [mm]	16 x 16 [406 x 406]	16 x 16 [406 x 406]	16 x 16 [406 x 406]	18 x 27 [457 x 686]	18 x 31 [457 x 787]	18 x 31 [457 x 787]	20 x 35 [508 x 889]	20 x 40 [508 x 1016]	20 x 40 [508 x 1016]	20 x 45 [508 x 1143]	20 x 45 [508 x 1143]
Standard Filter - 1” [25.4mm] Throwaway, qty (in) [mm]	16 x 20 [406 x 508]	16 x 20 [406 x 508]	16 x 20 [406 x 508]	2 - 18 x 18 [2 - 457 x 457]	2 - 18 x 18 [2 - 457 x 457]	2 - 18 x 18 [2 - 457 x 457]	1 - 12 x 20; 1- 20 x 25 [1 - 305 x 508; 1 - 508 x 635]	1 - 18 x 20; 1 - 20 x 24 [1 - 457 x 508; 1 - 508 x 610]	1 - 18 x 20; 1 - 20 x 24 [1 - 457 x 508; 1 - 508 x 610]	2 - 20 x 24 [2 - 508 x 610]	2 - 20 x 24 [2 - 508 x 610]
Weight - Operating, (lbs) [kg]	136 [62]	156 [71]	160 [73]	257 [117]	266 [121]	268 [122]	327 [148]	414 [188]	416 [189]	441 [200]	443 [201]
Weight - Packaged, (lbs) [kg]	146 [66]	166 [72]	170 [77]	267 [121]	276 [125]	278 [126]	337 [153]	424 [192]	426 [193]	451 [205]	453 [206]

Notes:
All units have TXV expansion device and 1/2” & 3/4” electrical knockouts.
575 volt motors are two speed.

Unit Maximum Water Working Pressure	
Options	Max Pressure PSIG [kPa]
Base Unit	500 [3,445]
Internal Secondary Pump (ISP)	145 [999]
ClimaDry	145 [999]
Internal Motorized Water Valve (MWV)	300 [2,067]
Internal Auto Flow Valve	500 [3,445]

Use the lowest maximum pressure rating when multiple options are combined.

Packaged Units

Rev.: 03 January, 2011

Tranquility 16 (TC) Series (60 Hz)

TC Series	006	009	012	015	018	024	030	036	042	048	060
Compressor (1 Each)	Rotary					Scroll					
Factory Charge HFC-410A (oz)	17	18.5	23	32	43	43	47	50	70	74	82
PSC Fan Motor & Blower											
Fan Motor Type/Speeds	PSC/3	PSC/3	PSC-3	PSC/3	PSC/3	PSC/3	PSC/3	PSC/3	PSC/3	PSC/3	PSC/3
Fan Motor (hp)	1/25	1/10	1/10	1/6	1/6	1/4	3/4	1/2	3/4	3/4	1
Blower Wheel Size (Dia x w)	5x5	5x5	6x5	8x7	8x7	9x7	9x7	9x8	9x8	10x10	11x10
Water Connection Size											
FPT	1/2”	1/2”	1/2”	1/2"	1/2"	3/4"	3/4"	3/4"	3/4"	1"	1"
Coax Volume (gallons)	0.123	0.143	0.167	0.286	0.450	0.286	0.323	0.323	0.890	0.738	0.939
Vertical											
Air Coil Dimensions (H x W)	10x15	10x15	10x15	20x17.25	20x17.25	20x17.25	20x17.25	24x21.75	24x21.76	24x28.25	24x28.25
Filter Standard - 1" Throwaway	10x18	10x18	10x18	20x20	20x20	20x20	20x20	24x24	24x24	1-14x24, 1-18x24	1-14x24, 1-18x24
Weight - Operating (lbs.)	103	105	114	153	158	189	197	203	218	263	278
Weight - Packaged (lbs.)	113	115	124	158	163	194	202	209	224	270	285
Horizontal											
Air Coil Dimensions (H x W)	10x15	10x15	10x15	16x22	16x22	16x22	16x22	20x25	20x25	20x35	20x35
Filter Standard - 1" Throwaway	10x18	10x18	10x18	16x25	16x25	18x25	18x25	20x28 or 2-20x14	20x28 or 2-20x14	1-20x24, 1-20x14	1-20x24, 1-20x14
Weight - Operating (lbs.)	103	105	114	153	158	174	182	203	218	263	278
Weight - Packaged (lbs.)	113	115	124	158	163	179	187	209	224	270	285

Notes:

All units have TXV expansion device, and 1/2” & 3/4” electrical knockouts.
FPT = Female Pipe Thread
Condensate Drain Connection is 3/4” FPT.
575 volt fan motors are two speed.

Unit Maximum Water Working Pressure	Max Pressure PSIG [kPa]
Base Unit	500 [3,445]

Tranquility (TR) Series (60 Hz)

TR Series	006	009	012	015	018	024	030	036	042	048	060
Compressor (1 each)	Rotary					Scroll					
Factory Charge HFC-410A - (oz.)	17	18.5	23	35	43	43	48	50	70	74	82
PSC Fan Motor & Blower											
Fan Motor Type/Speeds	PSC/3	PSC/3	PSC/3	PSC/3	PSC/3	PSC/3	PSC/3	PSC/3	PSC/3	PSC/3	PSC/3
Fan Motor (hp)	1/25	1/10	1/10	1/6	1/6	1/4	3/4	1/2	3/4	3/4	1
Blower Wheel Size (Dia x W)	5x5	5x5	6x5	8x7	8x7	9x7	9x7	9x8	9x8	10x10	11x10
Water Connection Size											
Source FPT	1/2”	1/2”	1/2”	1/2”	1/2”	3/4”	3/4”	3/4”	3/4”	1”	1”
Optional HWG FPT	1/2”										
Coax Volume (gallons)	0.123	0.143	0.167	0.286	0.45	0.286	0.323	0.323	0.89	0.738	0.939
Vertical											
Air Coil Dimensions (H x W)	10x15	10x15	10x15	20x17.25	20x17.25	20x17.25	20x17.25	24x21.75	24x21.76	28x25	28x25
Filter Standard - 1” Throwaway	10x18	10x18	10x18	20x20	20x20	20x20	20x20	24x24	24x24	28x28	28x28
Weight - Operating (lbs.)	110	112	121	163	168	184	192	213	228	283	298
Weight - Packaged (lbs.)	115	117	126	168	173	189	197	219	234	290	305
Horizontal											
Air Coil Dimensions (H x W)	10x15	10x15	10x15	16x22	16x22	16x22	16x22	20x25	20x25	20x35	20x35
Filter Standard - 1” Throwaway	10x18	10x18	10x18	16x25	16x25	18x25	18x25	20x28 or 2-20x14	20x28 or 2-20x14	1-20x24, 1-20x14	1-20x24, 1-20x14
Weight - Operating (lbs.)	110	112	121	163	168	184	192	213	228	283	298
Weight - Packaged (lbs.)	115	117	126	168	173	189	197	219	234	290	305

Notes: All units have TXV expansion device and 1/2” & 3/4” electrical knockouts.
575 volt fan motors are two speed.
FPT=Female Pipe Thread
Condensate Drain Connection is 3/4” FPT.

Unit Maximum Water Working Pressure	
Options	**Max Pressure PSIG [kPa]**
Base Unit	500 [3,445]
Internal Secondary Pump (ISP)	145 [999]
Internal Motorized Water Valve (MWV)	300 [2,067]
Internal Auto Flow Valve	500 [3,445]
ClimaDry	145 [999]

Use the lowest maximum pressure rating when multiple options are combined.

Horizontal Installation

Horizontal Unit Location

Units are not designed for outdoor installation. Locate the unit in an INDOOR area that allows enough space for service personnel to perform typical maintenance or repairs without removing unit from the ceiling. Horizontal units are typically installed above a false ceiling or in a ceiling plenum. Never install units in areas subject to freezing or where humidity levels could cause cabinet condensation (such as unconditioned spaces subject to 100% outside air). Consideration should be given to access for easy removal of the filter and access panels. Provide sufficient room to make water, electrical, and duct connection(s).

If the unit is located in a confined space, such as a closet, provisions must be made for return air to freely enter the space by means of a louvered door, etc. Any access panel screws that would be difficult to remove after the unit is installed should be removed prior to setting the unit. Refer to Figure 3 for an illustration of a typical installation. Refer to unit submittal data or engineering design guide for dimensional data.

In limited side access installations, pre-removal of the control box side mounting screws will allow control box removal for future servicing (TC/TR units only).

Conform to the following guidelines when selecting unit location:

1. Provide a hinged access door in concealed-spline or plaster ceilings. Provide removable ceiling tiles in T-bar or lay-in ceilings. Refer to horizontal unit dimensions for specific series and model in unit submittal data. Size the access opening to accommodate the service technician during the removal or replacement of the compressor and the removal or installation of the unit itself.
2. Provide access to hanger brackets, water valves and fittings. Provide screwdriver clearance to access panels, discharge collars and all electrical connections.
3. DO NOT obstruct the space beneath the unit with piping, electrical cables and other items that prohibit future removal of components or the unit itself.
4. Use a manual portable jack/lift to lift and support the weight of the unit during installation and servicing.

The installation of water source heat pump units and all associated components, parts and accessories which make up the installation shall be in accordance with the regulations of ALL authorities having jurisdiction and MUST conform to all applicable codes. It is the responsibility of the installing contractor to determine and comply with ALL applicable codes and regulations.

Mounting Horizontal Units

Horizontal units have hanger kits pre-installed from the factory as shown in Figure 1. Figure 3 shows a typical horizontal unit installation.

Horizontal heat pumps are typically suspended above a ceiling or within a soffit using field supplied, threaded rods sized to support the weight of the unit.

Use four (4) field supplied threaded rods and factory provided vibration isolators to suspend the unit. Hang the unit clear of the floor slab above and support the unit by the mounting bracket assemblies only. DO NOT attach the unit flush with the floor slab above.

Pitch the unit toward the drain as shown in Figure 2 to improve the condensate drainage. On small units (less than 2.5 tons/8.8kW) ensure that unit pitch does not cause condensate leaks inside the cabinet.

Figure 1: Hanger Bracket

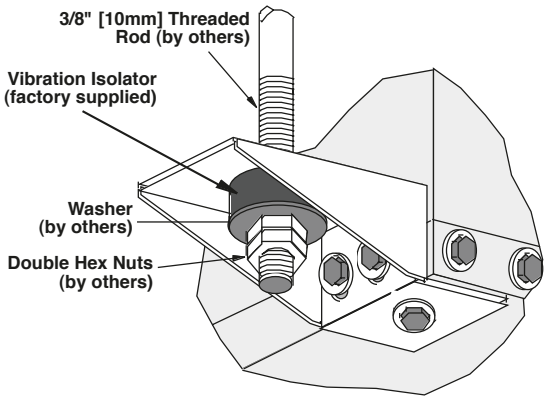

Figure 2: Horizontal Unit Pitch

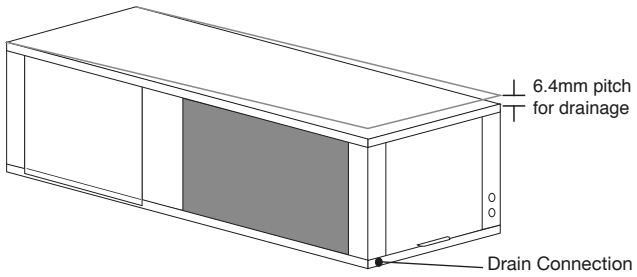

Figure 3: Typical Horizontal Unit Installation

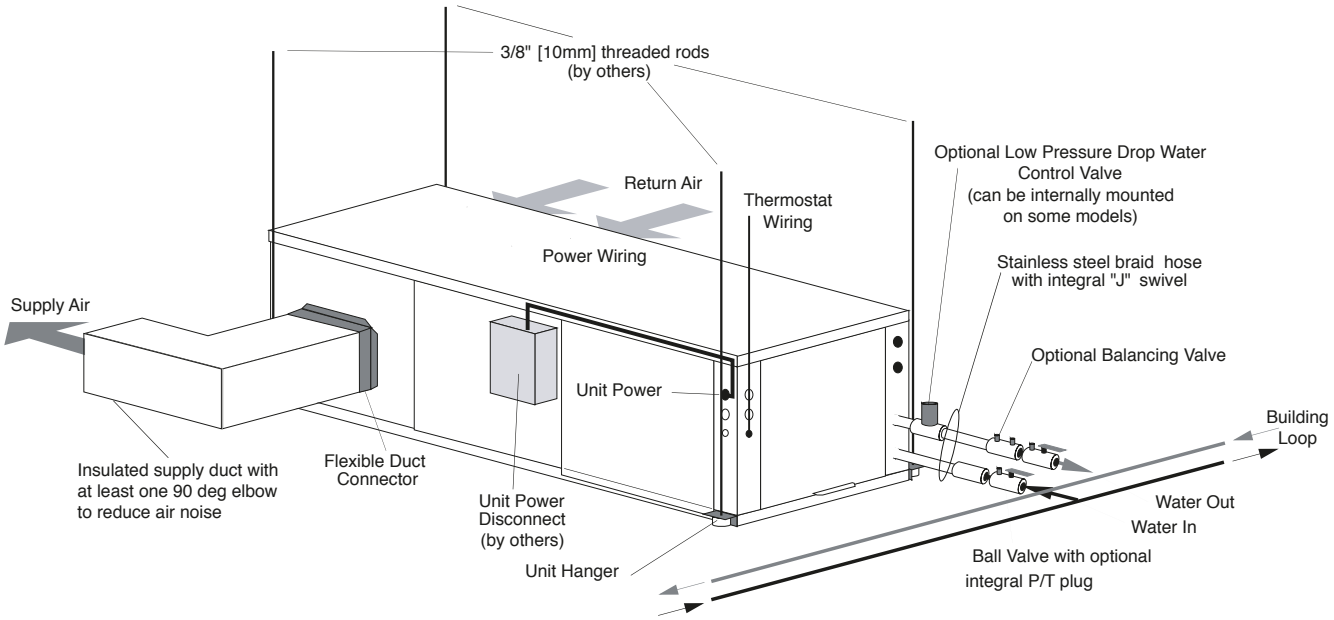

Air Coil - To obtain maximum performance, the air coil should be cleaned before start-up. A 10% solution of dishwasher detergent and water is recommended for both sides of the coil. A thorough water rinse should follow. **UV based anti-bacterial systems may damage coated air coils.**

Notice! Installation Note - Ducted Return: Many horizontal WSHPs are installed in a return air ceiling plenum application (above ceiling). Vertical WSHPs are commonly installed in a mechanical room with free return (e.g. louvered door). Therefore, filter rails are the industry standard and are included on ClimateMaster commercial heat pumps for the purposes of holding the filter only. For ducted return applications, the filter rail must be removed and replaced with a duct flange or filter rack. Canvas or flexible connectors should also be used to minimize vibration between the unit and ductwork.

Field Conversion of Air Discharge

Overview - Horizontal units can be field converted between side (straight) and back (end) discharge using the instructions below.

Note: It is not possible to field convert return air between left or right return models due to the necessity of refrigeration copper piping changes.

Preparation - It is best to field convert the unit on the ground before hanging. If the unit is already hung it should be taken down for the field conversion.

Side to Back Discharge Conversion

1. Place unit in well lit area. Remove the screws as shown in Figure 4 to free top panel and discharge panel.
2. Lift out the access panel and set aside. Lift and rotate the discharge panel to the other position as shown, being careful with the blower wiring.
3. Check blower wire routing and connections for tension or contact with sheet metal edges. Re-route if necessary.
4. Check refrigerant tubing for contact with other components.
5. Reinstall top panel and screws noting that the location for some screws will have changed.
6. Manually spin the fan wheel to ensure that the wheel is not rubbing or obstructed.
7. Replace access panels.

Back to Side Discharge Conversion - If the discharge is changed from back to side, use above instruction noting that illustrations will be reversed.

Left vs. Right Return - It is not possible to field convert return air between left or right return models due to the necessity of refrigeration copper piping changes. However, the conversion process of side to back or back to side discharge for either right or left return configuration is the same. In some cases, it may be possible to rotate the entire unit 180 degrees if the return air connection needs to be on the opposite side. **Note that rotating the unit will move the piping to the other end of the unit.**

Figure 4: Left Return Side to Back

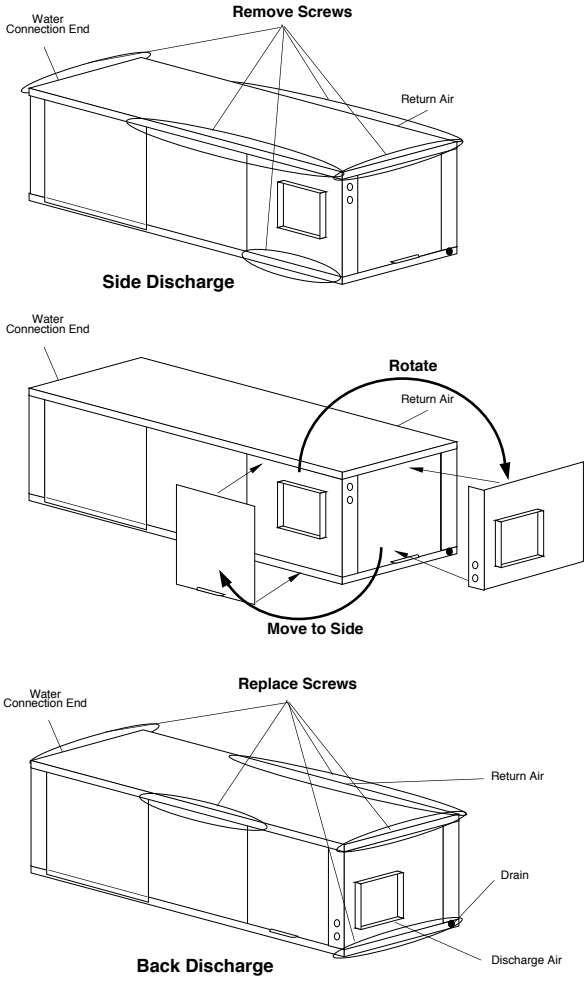

Figure 5: Right Return Side to Back

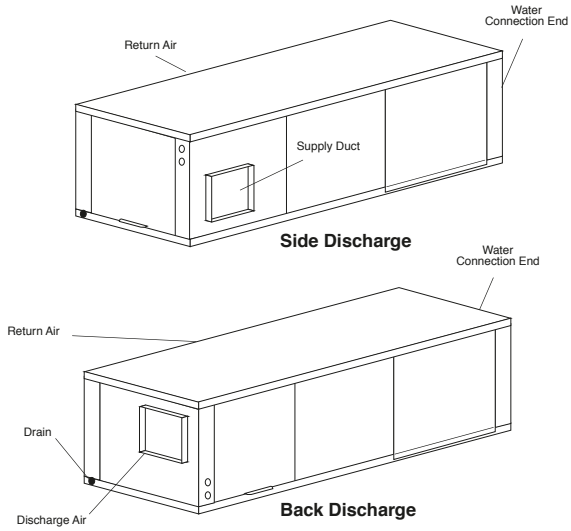

Condensate Piping - Horizontal Units - Units are typically installed directly above each other on successive floors with condensate drains located near the units. Attach the unit condensate drain connection to the building condensate drain with a flexible, non-pressure-rated 3/4 inch [19mm] ID plastic hose. Ensure that the hose is without kinks to maintain unobstructed flow of condensate from the unit to the drain. Verify that condensate line is pitched towards the drain 1/4" per foot (10mm per 46cm) of run.

Pitch the unit toward the drain as shown in Figure 2 to improve the condensate drainage. On small units (less than 2.5 tons/8.8 kW), ensure that unit pitch does not cause condensate leaks inside the cabinet.

The horizontal run of a condensate hose is usually too short to cause drainage problems. However, the horizontal run of the condensate line should be pitched at least 1 inch for every 10 feet [10mm per 116cm] of run in the direction of flow to ensure that the connection will not slip off due to excessive weight or piping expansion/contraction. Avoid low points and non-pitched piping since dirt collects in low or level areas and may cause stoppage and overflow.

Install condensate trap at each unit with the top of the trap positioned below the unit condensate drain connection as shown in Figure 6. Design the depth of the trap (water-seal) based upon the amount of ESP capability of the blower (where 2 inches [51mm] of ESP capability requires 2 inches [51mm] of trap depth). As a general rule, 1-1/2 inch [38mm] trap depth is the minimum.

Each unit must be installed with its own individual trap and connection to the condensate line (main) or riser. Provide a means to flush or blow out the condensate line. DO NOT install units with a common trap and/or vent.

Always vent the condensate line when dirt or air can collect in the line or a long horizontal drain line is required. Also vent when large units are working against higher external static pressure than other units connected to the same condensate main since this may cause poor drainage for all units on the line. **WHEN A VENT IS INSTALLED IN THE DRAIN LINE, IT MUST BE LOCATED AFTER THE TRAP IN THE DIRECTION OF THE CONDENSATE FLOW.**

Figure 6: Horizontal Condensate Connection

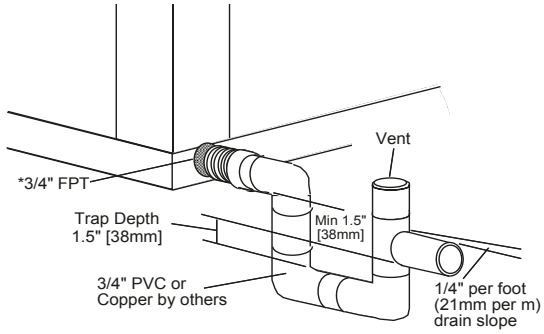

* Some units include a painted drain connection. Using a threaded pipe or similar device to clear any excess paint accumulated inside this fitting may ease final drain line installation.

⚠ CAUTION! ⚠

CAUTION! Ensure condensate line is pitched toward drain 1/4 inch per ft [21mm per m] of run.

DUCT SYSTEM INSTALLATION

Duct System Installation - Proper duct sizing and design is critical to the performance of the unit. The duct system should be designed to allow adequate and even airflow through the unit during operation. Air flow through the unit MUST be at or above the minimum stated airflow for the unit to avoid equipment damage. Duct systems should be designed for quiet operation. Refer to Figure 3 for horizontal duct system details or Figure 8 for vertical duct system details. A flexible connector is recommended for both discharge and return air duct connections on metal duct systems to eliminate the transfer of vibration to the duct system. To maximize sound attenuation of the unit blower, the supply and return plenums should include internal fiberglass duct liner or be constructed from ductboard for the first few feet. Application of the unit to uninsulated ductwork in an unconditioned space is not recommended, as the unit's performance may be adversely affected.

At least one 90° elbow should be included in the supply duct to reduce air noise. If air noise or excessive air flow is a problem, the blower speed can be changed. For airflow charts, consult submittal data for the series and model of the specific unit.

If the unit is connected to existing ductwork, a previous check should have been made to ensure that the ductwork has the capacity to handle the airflow required for the unit. If ducting is too small, as in the replacement of a heating only system, larger ductwork should be installed. All existing ductwork should be checked for leaks and repaired as necessary.

Vertical Installation

Vertical Unit Location - Units are not designed for outdoor installation. Locate the unit in an INDOOR area that allows enough space for service personnel to perform typical maintenance or repairs without removing unit from the mechanical room/closet. Vertical units are typically installed in a mechanical room or closet. Never install units in areas subject to freezing or where humidity levels could cause cabinet condensation (such as unconditioned spaces subject to 100% outside air). Consideration should be given to access for easy removal of the filter and access panels. Provide sufficient room to make water, electrical, and duct connection(s).

If the unit is located in a confined space, such as a closet, provisions must be made for return air to freely enter the space by means of a louvered door, etc. Any access panel screws that would be difficult to remove after the unit is installed should be removed prior to setting the unit. Refer to Figures 7 and 8 for typical installation illustrations. Refer to unit submittal data or engineering design guide for dimensional data.

1. Install the unit on a piece of rubber, neoprene or other mounting pad material for sound isolation. The pad should be at least 3/8" [10mm] to 1/2" [13mm] in thickness. Extend the pad beyond all four edges of the unit.
2. Provide adequate clearance for filter replacement and drain pan cleaning. Do not block filter access with piping, conduit or other materials. Refer to unit submittal data or engineering design guide for dimensional data.
3. Provide access for fan and fan motor maintenance and for servicing the compressor and coils without removing the unit.
4. Provide an unobstructed path to the unit within the closet or mechanical room. Space should be sufficient to allow removal of the unit, if necessary.
5. In limited side access installations, pre-removal of the control box side mounting screws will allow control box removal for future servicing (TC/TR units only).
6. Provide access to water valves and fittings and screwdriver access to the unit side panels, discharge collar and all electrical connections.

Figure 7: Vertical Unit Mounting

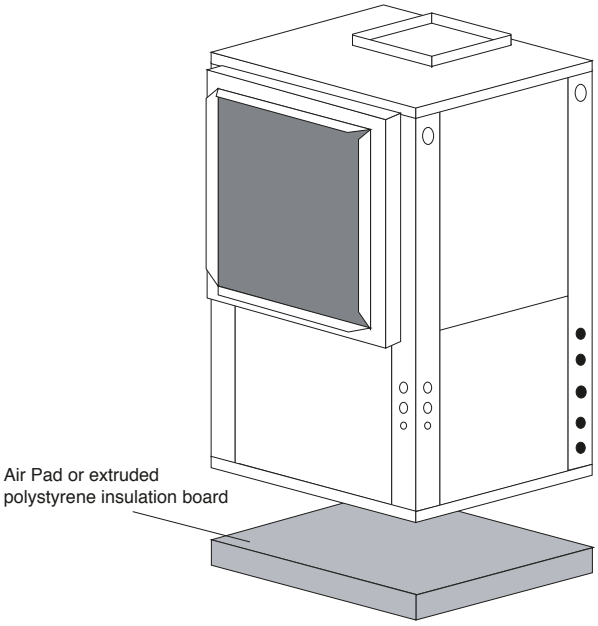

Figure 8: Typical Vertical Unit Installation Using Ducted Return Air

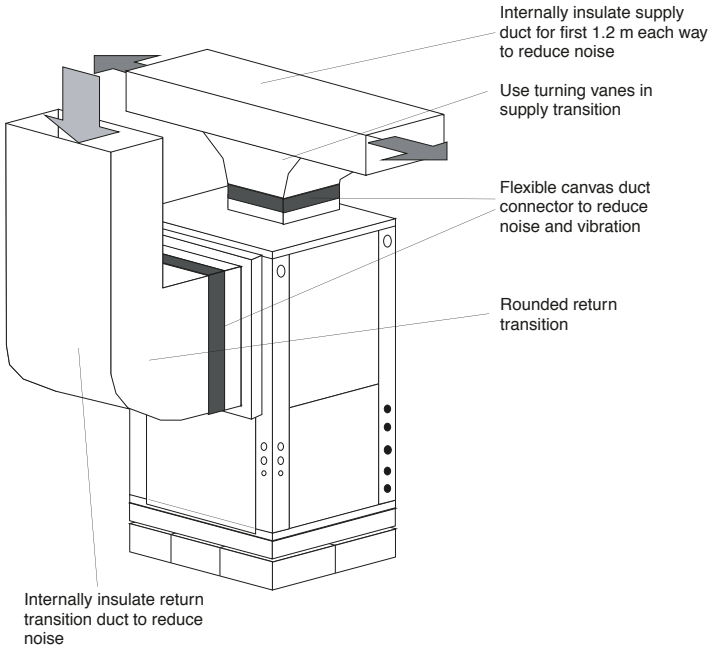

Sound Attenuation for Vertical Units - Sound attenuation is achieved by enclosing the unit within a small mechanical room or a closet. Additional measures for sound control include the following:

1. Mount the unit so that the return air inlet is 90° to the return air grille. Refer to Figure 9. Install a sound baffle as illustrated to reduce line-of sight sound transmitted through return air grilles.
2. Mount the unit on a rubber or neoprene isolation pad to minimize vibration transmission to the building structure.

Figure 9: Vertical Sound Attenuation

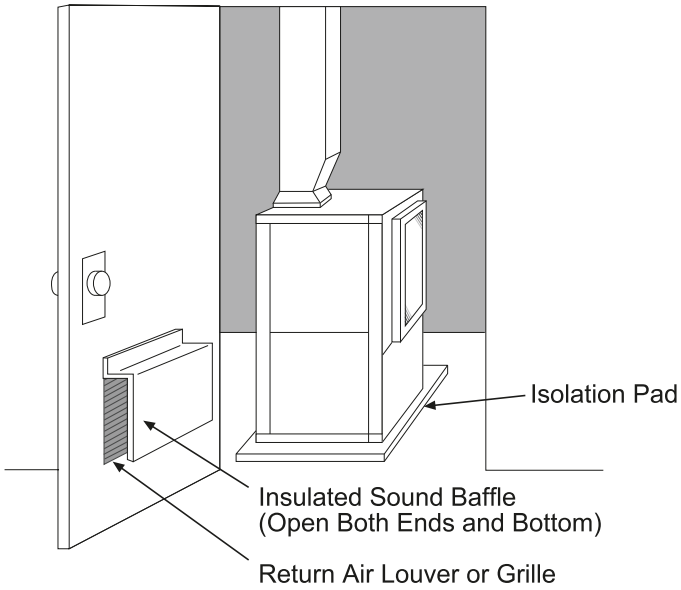

Notice! Units with clear plastic drain lines should have regular maintenance (as required) to avoid buildup of debris, especially in new construction.

Condensate Piping for Vertical Units - Vertical units utilize a condensate hose inside the cabinet as a trapping loop; therefore an external trap is not necessary. Figure 10a shows typical condensate connections. Figure 10b illustrates the internal trap for a typical vertical heat pump. Each unit must be installed with its own individual vent (where necessary) and a means to flush or blow out the condensate drain line. Do not install units with a common trap and/or vent.

Figure 10a: Vertical Condensate Drain

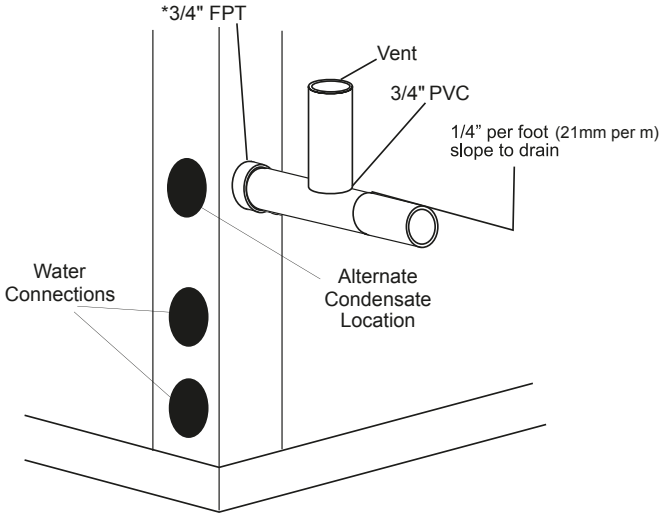

* Some units include a painted drain connection. Using a threaded pipe or similar device to clear any excess paint accumulated inside this fitting may ease final drain line installation.

Figure 10b: Vertical Internal Condensate Trap

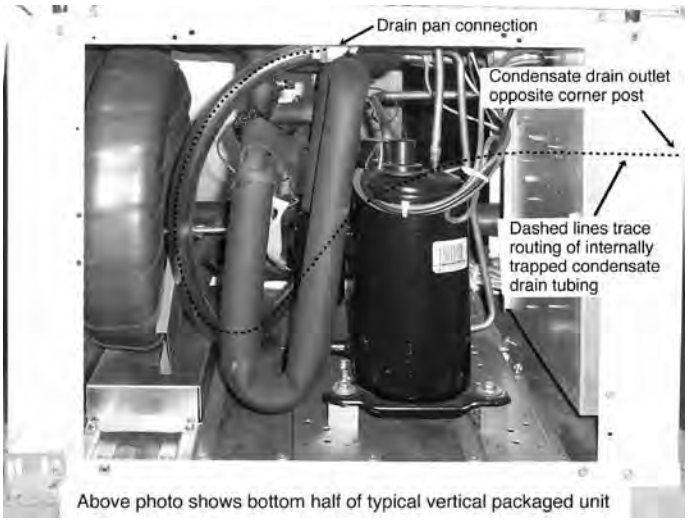

Above photo shows bottom half of typical vertical packaged unit

Piping Installation

Installation of Supply and Return Piping
Follow these piping guidelines.

1. Install a drain valve at the base of each supply and return riser to facilitate system flushing.
2. Install shut-off / balancing valves and unions at each unit to permit unit removal for servicing.
3. Place strainers at the inlet of each system circulating pump.
4. Select the proper hose length to allow slack between connection points. Hoses may vary in length by +2% to -4% under pressure.
5. Refer to Table 1. Do not exceed the minimum bend radius for the hose selected. Exceeding the minimum bend radius may cause the hose to collapse, which reduces water flow rate. Install an angle adapter to avoid sharp bends in the hose when the radius falls below the required minimum.

Insulation is not required on loop water piping except where the piping runs through unheated areas, outside the building or when the loop water temperature is below the minimum expected dew point of the pipe ambient conditions. Insulation is required if loop water temperature drops below the dew point (insulation is required for ground loop applications in most climates).

Pipe joint compound is not necessary when Teflon® thread tape is pre-applied to hose assemblies or when flared-end connections are used. If pipe joint compound is preferred, use compound only in small amounts on the external pipe threads of the fitting adapters. Prevent sealant from reaching the flared surfaces of the joint.

Note: When antifreeze is used in the loop, ensure that it is compatible with the Teflon tape or pipe joint compound that is applied.

Maximum allowable torque for brass fittings is 30 ft-lbs [41 N-m]. If a torque wrench is not available, tighten finger-tight plus one quarter turn. Tighten steel fittings as necessary.

Optional pressure-rated hose assemblies designed specifically for use with ClimateMaster units are available. Similar hoses can be obtained from alternate suppliers. Supply and return hoses are fitted with swivel-joint fittings at one end to prevent kinking during installation.

Refer to Figure 11 for an illustration of a typical supply/return hose kit. Adapters secure hose assemblies to the unit and risers. Install hose assemblies properly and check regularly to avoid system failure and reduced service life.

Installer Caution: After making water connections on units equipped with ClimaDry, ensure the three union nuts on the internal three-way water valve are tight.

ClimaDry-equipped units have a manual air bleed valve at the top of the reheat coil. This valve must be used to bleed the air from the reheat coil after filling the system, for the ClimaDry to operate properly.

A backup wrench is required when tightening water connections on TC Series units to prevent water line damage.

⚠ CAUTION! ⚠

CAUTION! Corrosive system water requires corrosion resistant fittings and hoses, and may require water treatment.

⚠ CAUTION! ⚠

CAUTION! Do not bend or kink supply lines or hoses.

⚠ CAUTION! ⚠

CAUTION! Piping must comply with all applicable codes.

Table 1: Metal Hose Minimum Bend Radii

Hose Diameter	Minimum Bend Radii
1/2" [12.7mm]	2-1/2" [6.4cm]
3/4" [19.1mm]	4" [10.2cm]
1" [25.4mm]	5-1/2" [14cm]
1-1/4" [31.8mm]	6-3/4" [17.1cm]

NOTICE! Do not allow hoses to rest against structural building components. Compressor vibration may be transmitted through the hoses to the structure, causing unnecessary noise complaints.

Figure 11: Supply/Return Hose Kit

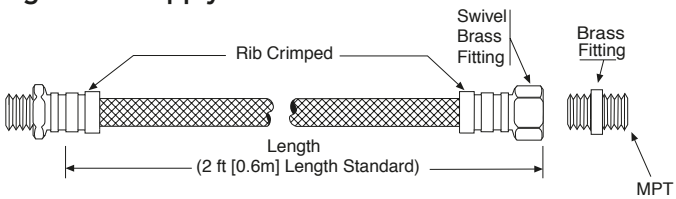

Water-Loop Heat Pump Applications

Commercial Water Loop Applications
Commercial systems typically include a number of units connected to a common piping system. Any unit plumbing maintenance work can introduce air into the piping system; therefore air elimination equipment is a major portion of the mechanical room plumbing. In piping systems expected to utilize water temperatures below 50°F [10°C], 1/2" [13mm] closed cell insulation is required on all piping surfaces to eliminate condensation (extended range units required). Metal to plastic threaded joints should never be used due to their tendency to leak over time. All commercial class units (except TC series) include low temperature-soldered bracket-supported FPT water connections, which do not require a backup wrench. A backup wrench must be used for TC series equipment fittings.

Teflon® tape thread sealant is recommended to minimize internal fouling of the heat exchanger. Do not over tighten connections and route piping so as not to interfere with service or maintenance access. Hose kits are available from ClimateMaster in different configurations as shown in Figure 12 for connection between the unit and the piping system. Depending upon selection, hose kits may include shut off valves, P/T plugs for performance measurement, high pressure stainless steel braided hose, "Y" type strainer with blow down valve, and/or "J" type swivel connection. Balancing valves and an external low pressure drop solenoid valve for use in variable speed pumping systems may also be included in the hose kit.

The piping system should be flushed to remove dirt, piping chips, and other foreign material prior to operation (see "Piping System Cleaning and Flushing Procedures" in this manual). The flow rate is usually set between 2.25 and 3.5 gpm per ton [2.9 and 4.5 l/m per kW] of cooling capacity. ClimateMaster recommends 3 gpm per ton [3.9 l/m per kW] for most applications of water loop heat pumps. To ensure proper maintenance and servicing, P/T ports are imperative for temperature and flow verification, as well as performance checks.

Water loop heat pump (cooling tower/boiler) systems typically utilize a common loop, maintained between 60 - 90°F [16 - 32°C]. The use of a closed circuit evaporative cooling tower with a secondary heat exchanger between the tower and the water loop is recommended. If an open type cooling tower is used continuously, chemical treatment and filtering will be necessary.

Figure 12: Typical Water-Loop Application

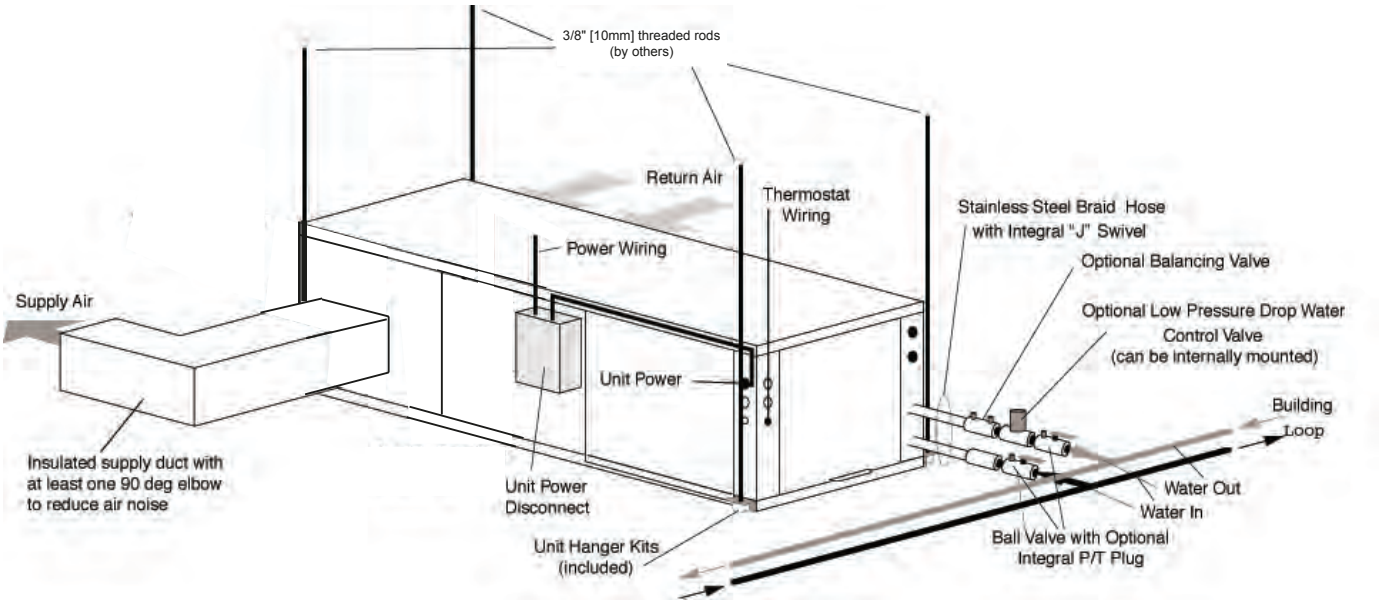

Low Water Temperature Cutout Setting - CXM Control
When antifreeze is selected, the FP1 jumper (JW3) should be clipped to select the low temperature (antifreeze 10.0°F [-12.2°C]) setpoint and avoid nuisance faults (see "Low Water Temperature Cutout Selection" in this manual). **Note: Low water temperature operation requires extended range equipment.**

Ground-Loop Heat Pump Applications

⚠ CAUTION! ⚠

CAUTION! The following instructions represent industry accepted installation practices for closed loop earth coupled heat pump systems. Instructions are provided to assist the contractor in installing trouble free ground loops. These instructions are recommendations only. State/provincial and local codes MUST be followed and installation MUST conform to ALL applicable codes. It is the responsibility of the installing contractor to determine and comply with ALL applicable codes and regulations.

⚠ CAUTION! ⚠

CAUTION! Ground loop applications require extended range equipment and optional refrigerant/water circuit insulation.

Pre-Installation

Prior to installation, locate and mark all existing underground utilities, piping, etc. Install loops for new construction before sidewalks, patios, driveways, and other construction has begun. During construction, accurately mark all ground loop piping on the plot plan as an aid in avoiding potential future damage to the installation.

Piping Installation

The typical closed loop ground source system is shown in Figure 13. All earth loop piping materials should be limited to polyethylene fusion only for in-ground sections of the loop. Galvanized or steel fittings should not be used at any time due to their tendency to corrode. All plastic to metal threaded fittings should be avoided due to their potential to leak in earth coupled applications. A flanged fitting should be substituted. P/T plugs should be used so that flow can be measured using the pressure drop of the unit heat exchanger.

Earth loop temperatures can range between 25 and 110°F [-4 to 43°C]. Flow rates between 2.25 and 3 gpm [2.41 to 3.23 l/m per kW] of cooling capacity is recommended in these applications.

Test individual horizontal loop circuits before backfilling. Test vertical U-bends and pond loop assemblies prior to installation. Pressures of at least 100 psi [689 kPa] should be used when testing. Do not exceed the pipe pressure rating. Test entire system when all loops are assembled.

Flushing the Earth Loop

Upon completion of system installation and testing, flush the system to remove all foreign objects and purge to remove all air.

Antifreeze

In areas where minimum entering loop temperatures drop below 40°F [5°C] or where piping will be routed through areas subject to freezing, antifreeze is required. Alcohols and glycols are commonly used as antifreeze; however your local sales office should be consulted to determine the antifreeze best suited to your area. Freeze protection should be maintained to 15°F [9°C] below the lowest expected entering loop temperature. For example, if 30°F [-1°C] is the minimum expected entering loop temperature, the leaving loop temperature would be 22 to 25°F [-6 to -4°C] and freeze protection should be at 15°F [-10°C]. Calculation is as follows:
30°F - 15°F = 15°F [-1°C - 9°C = -10°C].

All alcohols should be premixed and pumped from a reservoir outside of the building when possible or introduced under the water level to prevent fumes. Calculate the total volume of fluid in the piping system. Then use the percentage by volume shown in table 2 for the amount of antifreeze needed. Antifreeze concentration should be checked from a well mixed sample using a hydrometer to measure specific gravity.

Low Water Temperature Cutout Setting - CXM Control

When antifreeze is selected, the FP1 jumper (JW3) should be clipped to select the low temperature (antifreeze 10.0°F [-12.2°C]) setpoint and avoid nuisance faults (see "Low Water Temperature Cutout Selection" in this manual). **Note: Low water temperature operation requires extended range equipment.**

Table 2: Antifreeze Percentages by Volume

Type	Minimum Temperature for Low Temperature Protection			
	10°F [-12.2°C]	15°F [-9.4°C]	20°F [-6.7°C]	25°F [-3.9°C]
Methanol	25%	21%	16%	10%
100% USP food grade Propylene Glycol	38%	25%	22%	15%
Ethanol*	29%	25%	20%	14%

* Must not be denatured with any petroleum based product

Figure 13: Typical Ground-Loop Application

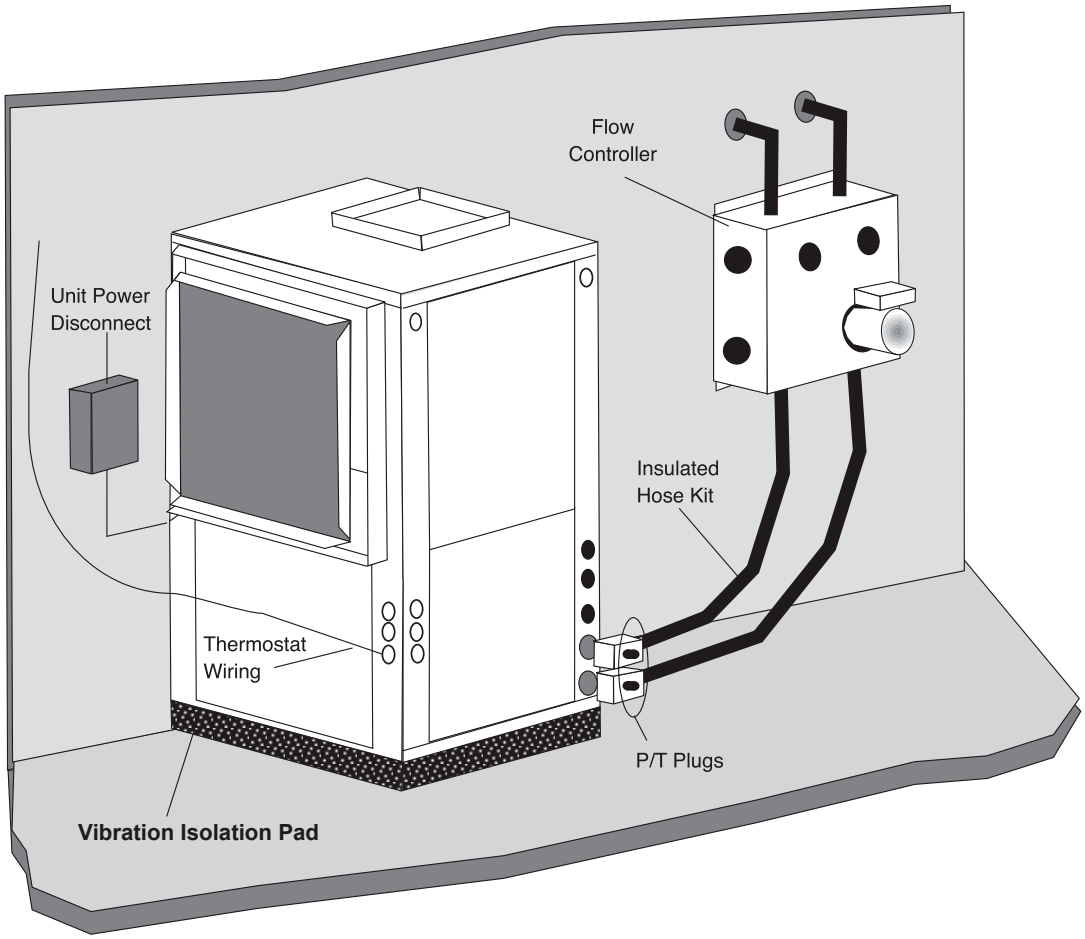

Ground-Water Heat Pump Applications

Open Loop - Ground Water Systems - Typical open loop piping is shown in Figure 14. Shut off valves should be included for ease of servicing. Boiler drains or other valves should be "tee'd" into the lines to allow acid flushing of the heat exchanger. Shut off valves should be positioned to allow flow through the coax via the boiler drains without allowing flow into the piping system. P/T plugs should be used so that pressure drop and temperature can be measured. Piping materials should be limited to copper or PVC SCH80.

Note: Due to the pressure and temperature extremes, PVC SCH40 is not recommended.

Water quantity should be plentiful and of good quality. Consult table 3 for water quality guidelines. The unit can be ordered with either a copper or cupro-nickel water heat exchanger. Consult Table 3 for recommendations. Copper is recommended for closed loop systems and open loop ground water systems that are not high in mineral content or corrosiveness. In conditions anticipating heavy scale formation or in brackish water, a cupro-nickel heat exchanger is recommended. In ground water situations where scaling could be heavy or where biological growth such as iron bacteria will be present, an open loop system is not recommended. Heat exchanger coils may over time lose heat exchange capabilities due to build up of mineral deposits. Heat exchangers must only be serviced by a qualified technician, as acid and special pumping equipment is required. Desuperheater coils can likewise become scaled and possibly plugged. In areas with extremely hard water, the owner should be informed that the heat exchanger may require occasional acid flushing. In some cases, the desuperheater option should not be recommended due to hard water conditions and additional maintenance required.

Water Quality Standards - Table 3 should be consulted for water quality requirements. Scaling potential should be assessed using the pH/Calcium hardness method. If the pH <7.5 and the calcium hardness is less than 100 ppm, scaling potential is low. If this method yields numbers out of range of those listed, the Ryznar Stability and Langelier Saturation indecies should be calculated. Use the appropriate scaling surface temperature for the application, 150°F [66°C] for direct use (well water/open loop) and DHW (desuperheater); 90°F [32°F] for indirect use. A monitoring plan should be implemented in these probable scaling situations. Other water quality issues such as iron fouling, corrosion prevention and erosion and clogging should be referenced in Table 3.

Expansion Tank and Pump - Use a closed, bladder-type expansion tank to minimize mineral formation due to air exposure. The expansion tank should be sized to provide at least one minute continuous run time of the pump using its drawdown capacity rating to prevent pump short cycling. Discharge water from the unit is not contaminated in any manner and can be disposed of in various ways, depending on local building codes (e.g. recharge well, storm sewer, drain field, adjacent stream or pond, etc.). Most local codes forbid the use of sanitary sewer for disposal. Consult your local building and zoning department to assure compliance in your area.

Water Control Valve - Note the placement of the water control valve in Figure 14. Always maintain water pressure in the heat exchanger by placing the water control valve(s) on the discharge line to prevent mineral precipitation during the off-cycle. Pilot operated slow closing valves are recommended to reduce water hammer. If water hammer persists, a mini-expansion tank can be mounted on the piping to help absorb the excess hammer shock. Ensure that the total 'VA' draw of the valve can be supplied by the unit transformer. For instance, a slow closing valve can draw up to 35VA. This can overload smaller 40 or 50 VA transformers depending on the other controls in the circuit. A typical pilot operated solenoid valve draws approximately 15VA (see Figure 21). Note the special wiring diagrams for slow closing valves (Figures 22 & 23).

Flow Regulation - Flow regulation can be accomplished by two methods. One method of flow regulation involves simply adjusting the ball valve or water control valve on the discharge line. Measure the pressure drop through the unit heat exchanger, and determine flow rate from Tables 8a through 8e. Since the pressure is constantly varying, two pressure gauges may be needed. Adjust the valve until the desired flow of 1.5 to 2 gpm per ton [2.0 to 2.6 l/m per kW] is achieved. A second method of flow control requires a flow control device mounted on the outlet of the water control valve. The device is typically a brass fitting with an orifice of rubber or plastic material that is designed to allow a specified flow rate. On occasion, flow control devices may produce velocity noise that can be reduced by applying some back pressure from the ball valve located on the discharge line. Slightly closing the valve will spread the pressure drop over both devices, lessening the velocity noise.

Note: When EWT is below 50°F [10°C], 2 gpm per ton (2.6 l/m per kW) is required.

Water Coil Low Temperature Limit Setting - For all open loop systems the 30°F [-1.1°C] FP1 setting (factory setting-water) should be used to avoid freeze damage to the unit. See "Low Water Temperature Cutout Selection" in this manual for details on the low limit setting.

Figure 14: Typical Open Loop/Well Application

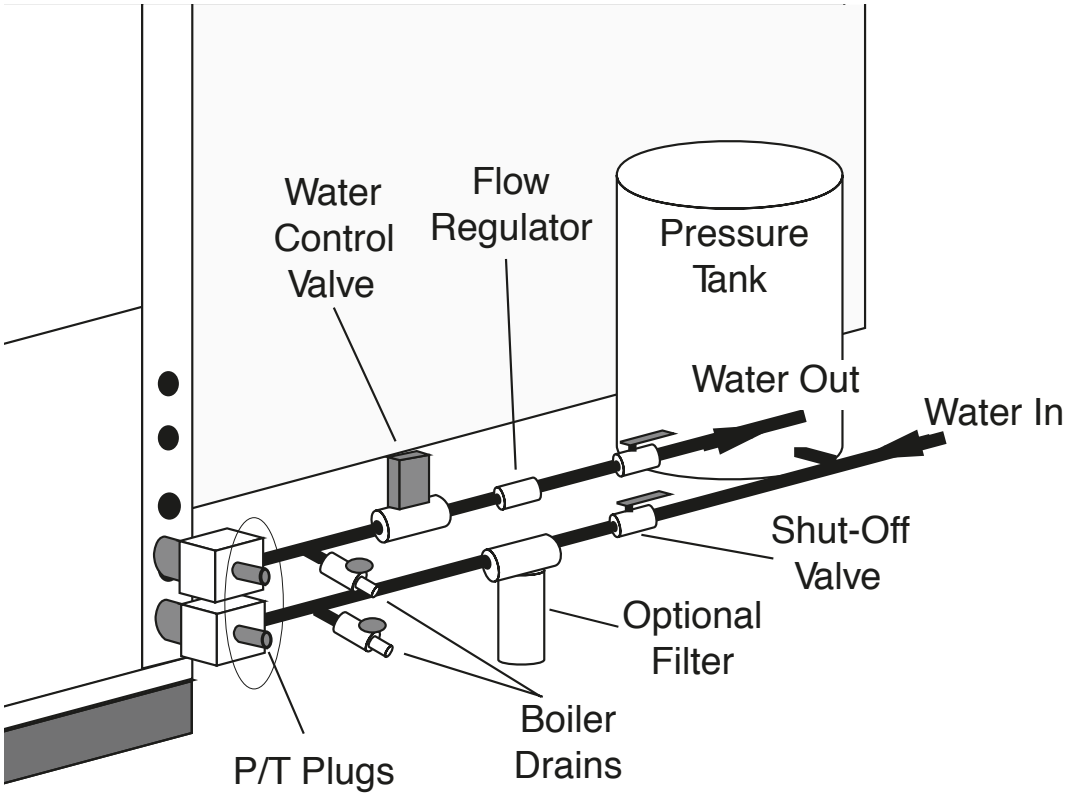

Water Quality Standards

Table 3: Water Quality Standards

Water Quality Parameter	HX Material	Closed Recirculating	Open Loop and Recirculating Well		
Scaling Potential - Primary Measurement					
Above the given limits, scaling is likely to occur. Scaling indexes should be calculated using the limits below					
pH/Calcium Hardness Method	All	-	**pH < 7.5 and Ca Hardness <100ppm**		
Index Limits for Probable Scaling Situations - (Operation outside these limits is not recommended)					
Scaling indexes should be calculated at 66°C for direct use and HWG applications, and at 32°C for indirect HX use. A monitoring plan should be implemented.					
Ryznar Stability Index	All	-	**6.0 - 7.5** If >7.5 minimize steel pipe use.		
Langelier Saturation Index	All	-	**-0.5 to +0.5** If <-0.5 minimize steel pipe use. Based upon 66°C HWG and Direct well, 29°C Indirect Well HX		
Iron Fouling					
Iron Fe^{2+} (Ferrous) (Bacterial Iron potential)	All	-	**<0.2 ppm (Ferrous)** If Fe^{2+} (ferrous)>0.2 ppm with pH 6 - 8, O2<5 ppm check for iron bacteria.		
Iron Fouling	All	-	**<0.5 ppm of Oxygen** Above this level deposition will occur.		
Corrosion Prevention					
pH	All	**6 - 8.5** Monitor/treat as needed	**6 - 8.5** Minimize steel pipe below 7 and no open tanks with pH <8		
Hydrogen Sulfide (H_2S)	All	-	**<0.5 ppm** At H_2S>0.2 ppm, avoid use of copper and copper nickel piping or HX's. Rotten egg smell appears at 0.5 ppm level. Copper alloy (bronze or brass) cast components are OK to <0.5 ppm.		
Ammonia ion as hydroxide, chloride, nitrate and sulfate compounds	All	-	**<0.5 ppm**		
Maximum Chloride Levels			Maximum Allowable at maximum water temperature.		
			10°C	24°C	38°C
	Copper	-	<20ppm	NR	NR
		-	<150 ppm	NR	NR
	304 SS	-	<400 ppm	<250 ppm	<150 ppm
	316 SS	-	<1000 ppm	<550 ppm	< 375 ppm
	Titanium	-	>1000 ppm	>550 ppm	>375 ppm
Erosion and Clogging					
Particulate Size and Erosion	All	<10 ppm of particles and a maximum velocity of 1.8 m/s Filtered for maximum 841 micron [0.84 mm, 20 mesh] size.	<10 ppm (<1 ppm "sandfree" for reinjection) of particles and a maximum velocity of 1.8 m/s. Filtered for maximum 841 micron 0.84 mm, 20 mesh] size. Any particulate that is not removed can potentially clog components.		

Notes:
- Closed Recirculating system is identified by a closed pressurized piping system.
- Recirculating open wells should observe the open recirculating design considerations.
- NR - Application not recommended.
- "-" No design Maximum.

Electrical - Line Voltage

Electrical - Line Voltage - All field installed wiring, including electrical ground, must comply with the National Electrical Code as well as all applicable local codes. Refer to the unit electrical data for fuse sizes. Consult wiring diagram for field connections that must be made by the installing (or electrical) contractor. All final electrical connections must be made with a length of flexible conduit to minimize vibration and sound transmission to the building.

General Line Voltage Wiring - Be sure the available power is the same voltage and phase shown on the unit serial plate. Line and low voltage wiring must be done in accordance with local codes or the National Electric Code, whichever is applicable.

Transformer - All 208/230 voltage units are factory wired for 208 volt. If supply voltage is 230 volt, installer must rewire transformer. See wire diagram for connections.

⚠ WARNING! ⚠

WARNING! The installation of water-source heat pumps and all associated components, parts, and accessories which make up the installation shall be in accordance with the regulations of ALL authorities having jurisdiction and MUST conform to all applicable codes. It is the responsibility of the installing contractor to determine and comply with ALL applicable codes and regulations.

⚠ CAUTION! ⚠

CAUTION! Use only copper conductors for field installed electrical wiring. Unit terminals are not designed to accept other types of conductors.

Electrical - Line Voltage

Table 4a: Tranquility 27® (TT) Series Electrical Data (Standard Units)

All TT Units								Standard TT Units		
Model	Voltage Code	Voltage	Min/Max Voltage	Compressor			Fan Motor FLA	Total Unit FLA	Min Circuit Amp	Max Fuse/ HACR
				QTY	RLA	LRA				
TT 026	G	208-230/60/1	197/254	1	10.3	52.0	3.9	14.2	16.8	25
TT 038	G	208-230/60/1	197/254	1	16.7	82.0	3.9	20.6	24.8	40
	H	208-230/60/3	197/254	1	11.2	58.0	3.9	15.1	17.9	25
	F*	460/60/3*	414/506	1	4.5	29.0	3.2	7.7	8.8	15
TT 049	G	208-230/60/1	197/254	1	21.2	96.0	6.9	28.1	33.4	50
	H	208-230/60/3	197/254	1	13.5	88.0	6.9	20.4	23.8	35
	F*	460/60/3*	414/506	1	6.4	41.0	6.0	12.4	14.0	20
TT 064	G	208-230/60/1	197/254	1	25.6	118.0	6.9	32.5	38.9	60
	H	208-230/60/3	197/254	1	17.6	123.0	6.9	24.5	28.9	45
	F*	460/60/3*	414/506	1	9.0	62.0	6.0	15.0	17.3	25
TT 072	G	208-230/60/1	197/254	1	27.2	150.0	6.0	33.2	40.0	60

HACR circuit breaker in USA only
Wire length based on one way measurement with 2% voltage drop
Wire size based on 60°C copper conductor
All fuses Class RK-5

*** NEUTRAL CONNECTION REQUIRED! All F Voltage (460 vac) units with ECM motors require a four wire power supply with neutral. ECM motor is rated 265 vac and is wired between one hot leg and neutral.**

Table 4b: Tranquility 27® (TT) Series Electrical Data Units with Secondary Pump or ClimaDry Reheat

All TT Units				TT Units with ClimaDry				TT Units with Secondary Pump			
Model	Voltage Code	Voltage	Min/Max Voltage	Reheat Pump FLA	Total Unit FLA	Min Circuit Amp	Max Fuse/ HACR	Pump FLA	Total Unit FLA	Min Circuit Amp	Max Fuse/ HACR
TT 026	G	208-230/60/1	197/254	0.8	15.0	17.6	25	0.43	14.6	17.2	25
TT 038	G	208-230/60/1	197/254	0.8	21.4	25.6	40	0.8	21.4	25.6	40
	H	208-230/60/3	197/254	0.8	15.9	18.7	25	0.8	15.9	18.7	25
	F*	460/60/3*	414/506	0.7	8.4	9.5	15	0.7	8.4	9.5	15
TT 049	G	208-230/60/1	197/254	1.07	29.2	34.5	50	0.8	28.9	34.2	50
	H	208-230/60/3	197/254	1.07	21.5	24.8	35	0.8	21.2	24.6	35
	F*	460/60/3*	414/506	1.07	13.5	15.1	20	0.7	13.1	14.7	20
TT 064	G	208-230/60/1	197/254	1.07	33.6	40.0	60	1.07	33.6	40.0	60
	H	208-230/60/3	197/254	1.07	25.6	30.0	45	1.07	25.6	30.0	45
	F*	460/60/3*	414/506	1.07	16.1	18.3	25	1.07	16.1	18.3	25
TT 072	G	208-230/60/1	197/254	1.07	34.3	41.1	60	1.07	34.3	41.1	60

HACR circuit breaker in USA only
Wire length based on one way measurement with 2% voltage drop
Wire size based on 60°C copper conductor
All fuses Class RK-5

*** NEUTRAL CONNECTION REQUIRED! All F Voltage (460 vac) units with ECM motors/ClimaDry/internal secondary circulators require a four wire power supply with neutral. ECM motors/reheat pumps/internal secondary circulators are rated 265 vac and are wired between one hot leg and neutral.**

Table 4c: Tranquility 20 (TS) Series Electrical Data - (PSC Motor & ClimaDry)

All TS Units with Standard PSC Motor								TS Units (PSC)			TS Units with PSC Fan Motor and ClimaDry			
Model	Voltage Code	Rated Voltage	Voltage Min/Max	Compressor			Fan Motor FLA	Total Unit FLA	Min Circuit Amp	Max Fuse/ HACR	Reheat Pump FLA	Total Unit FLA	Min Circuit Amp	Max Fuse/ HACR
				QTY	RLA	LRA								
TS 018	G	208-230/60/1	197/254	1	9.0	48.0	1.0	10.0	12.3	20	0.8	10.8	13.1	20
	E	265/60/1	239/292	1	8.4	40.0	0.9	9.3	11.4	15	0.7	10.0	12.1	20
TS 024	G	208-230/60/1	197/254	1	12.8	60.0	1.1	13.9	17.1	25	0.8	14.7	17.9	30
	E	265/60/1	239/292	1	10.9	58.0	0.9	11.8	14.5	25	0.7	12.5	15.2	25
	H	208-230/60/3	197/254	1	8.0	55.0	1.1	9.1	11.1	15	0.8	9.9	11.9	15
	F*	460/60/3*	414/506	1	4.0	22.4	0.6	4.6	5.6	15	0.7	5.3	6.3	15
TS 030	G	208-230/60/1	197/254	1	13.5	61.0	1.4	14.9	18.3	30	0.8	15.7	19.1	30
	E	265/60/1	239/292	1	10.9	58.0	1.6	12.5	15.2	25	0.7	13.2	15.9	25
	H	208-230/60/3	197/254	1	8.3	63.0	1.4	9.7	11.8	20	0.8	10.5	12.6	20
	F*	460/60/3*	414/506	1	4.5	27.0	0.9	5.4	6.5	15	0.7	6.1	7.2	15
TS 036	G	208-230/60/1	197/254	1	14.7	72.5	2.1	16.8	20.5	35	0.8	17.6	21.3	35
	E	265/60/1	239/292	1	12.5	61.0	2.2	14.7	17.8	30	0.7	15.4	18.5	30
	H	208-230/60/3	197/254	1	10.4	63.0	2.1	12.5	15.1	25	0.8	13.3	15.9	25
	F*	460/60/3*	414/506	1	4.5	32.0	1.3	5.8	6.9	15	0.7	6.5	7.6	15
TS 042	G	208-230/60/1	197/254	1	15.4	83.0	2.1	17.5	21.4	35	0.8	18.3	22.2	35
	H	208-230/60/3	197/254	1	11.5	77.0	2.1	13.6	16.5	25	0.8	14.4	17.3	25
	F*	460/60/3*	414/506	1	5.1	35.0	1.0	6.1	7.4	15	0.7	6.8	8.1	15
	N	575/60/3	518/633	1	4.3	31.0	0.8	5.1	6.2	15	N/A	N/A	N/A	N/A
TS 048	G	208-230/60/1	197/254	1	20.5	109.0	3.0	23.5	28.6	45	1.07	24.6	29.7	50
	H	208-230/60/3	197/254	1	14.6	91.0	3.0	17.6	21.3	35	1.07	18.7	22.3	35
	F*	460/60/3*	414/506	1	7.1	46.0	1.7	8.8	10.6	15	1.07	9.9	11.6	15
	N	575/60/3	518/633	1	5.1	34.1	1.4	6.5	7.8	15	N/A	N/A	N/A	N/A
TS 060	G	208-230/60/1	197/254	1	26.9	145.0	4.9	31.8	38.5	60	1.07	32.9	39.6	60
	H	208-230/60/3	197/254	1	17.6	123.0	4.9	22.5	26.9	40	1.07	23.6	28.0	45
	F*	460/60/3*	414/506	1	9.6	64.0	2.5	12.1	14.5	20	1.07	13.2	15.6	25
	N	575/60/3	518/633	1	6.1	40.0	1.9	8.0	9.5	15	N/A	N/A	N/A	N/A
TS 070	G	208-230/60/1	197/254	1	30.1	158.0	5.8	35.9	43.4	70	1.07	37.0	44.5	70
	H	208-230/60/3	197/254	1	20.5	155.0	5.8	26.3	31.4	50	1.07	27.4	32.5	50
	F*	460/60/3*	414/506	1	9.6	75.0	2.6	12.2	14.6	20	1.07	13.3	15.7	25
	N	575/60/3	518/633	1	7.6	54.0	2.3	9.9	11.8	15	N/A	N/A	N/A	N/A

* NEUTRAL CONNECTION REQUIRED! All F Voltage (460 vac) units with ClimaDry require a four wire power supply with neutral.
Reheat pump is rated 265 vac and is wired between one hot leg and neutral.

Table 4d: Tranquility 20 (TS) Series Electrical Data - (PSC High Static Motor & ClimaDry)

All TS Units with High Static PSC Fan Motor								TS (H.S. PSC) Units			TS Units with H.S. PSC Fan Motor and ClimaDry			
Model	Voltage Code	Rated Voltage	Voltage Min/Max	Compressor			Fan Motor FLA	Total Unit FLA	Min Circuit Amp	Max Fuse/ HACR	Reheat Pump FLA	Total Unit FLA	Min Circuit Amp	Max Fuse/ HACR
				QTY	RLA	LRA								
TS 018	G	208-230/60/1	197/254	1	9.0	48.0	1.1	10.1	12.4	20	0.8	10.9	13.2	20
	E	265/60/1	239/292	1	8.4	40.0	0.9	9.3	11.4	15	0.7	10.0	12.1	20
TS 024	G	208-230/60/1	197/254	1	12.8	60.0	1.4	14.2	17.4	30	0.8	15.0	18.2	30
	E	265/60/1	239/292	1	10.9	58.0	1.6	12.5	15.2	25	0.7	13.2	15.9	25
	H	208-230/60/3	197/254	1	8.0	55.0	1.4	9.4	11.4	15	0.8	10.2	12.2	20
	F*	460/60/3*	414/506	1	4.0	22.4	0.9	4.9	5.9	15	0.7	5.6	6.6	15
TS 030	G	208-230/60/1	197/254	1	13.5	61.0	1.8	15.3	18.7	30	0.8	16.1	19.5	30
	E	265/60/1	239/292	1	10.9	58.0	2.0	12.9	15.6	25	0.7	13.6	16.3	25
	H	208-230/60/3	197/254	1	8.3	63.0	1.8	10.1	12.2	20	0.8	10.9	13.0	20
	F*	460/60/3*	414/506	1	4.5	27.0	1.24	5.7	6.9	15	0.7	6.4	7.6	15
TS 036	G	208-230/60/1	197/254	1	14.7	72.5	2.0	16.7	20.4	35	0.8	17.5	21.2	35
	E	265/60/1	239/292	1	12.5	61.0	2.2	14.7	17.8	30	0.7	15.4	18.5	30
	H	208-230/60/3	197/254	1	10.4	63.0	2.0	12.4	15.0	25	0.8	13.2	15.8	25
	F*	460/60/3*	414/506	1	4.5	32.0	1.0	5.5	6.6	15	0.7	6.2	7.3	15
TS 042	G	208-230/60/1	197/254	1	15.4	83.0	3.0	18.4	22.3	35	0.8	19.2	23.1	35
	H	208-230/60/3	197/254	1	11.5	77.0	3.0	14.5	17.4	25	0.8	15.3	18.2	25
	F*	460/60/3*	414/506	1	5.1	35.0	1.7	6.8	8.1	15	0.7	7.5	8.8	15
	N	575/60/3	518/633	1	4.3	31.0	1.4	5.7	6.8	15	N/A	N/A	N/A	N/A
TS 048	G	208-230/60/1	197/254	1	20.5	109.0	3.4	23.9	29.0	45	1.07	25.0	30.1	50
	H	208-230/60/3	197/254	1	14.6	91.0	3.4	18.0	21.7	35	1.07	19.1	22.7	35
	F*	460/60/3*	414/506	1	7.1	46.0	1.8	8.9	10.7	15	1.07	10.0	11.7	15
	N	575/60/3	518/633	1	5.1	34.1	1.4	6.5	7.8	15	N/A	N/A	N/A	N/A
TS 060	G	208-230/60/1	197/254	1	26.9	145.0	5.8	32.7	39.4	60	1.07	33.8	40.5	60
	H	208-230/60/3	197/254	1	17.6	123.0	5.8	23.4	27.8	45	1.07	24.5	28.9	45
	F*	460/60/3*	414/506	1	9.6	64.0	2.6	12.2	14.6	20	1.07	13.3	15.7	25
	N	575/60/3	518/633	1	6.1	40.0	2.3	8.4	9.9	15	N/A	N/A	N/A	N/A

* NEUTRAL CONNECTION REQUIRED! All F Voltage (460 vac) units with ClimaDry require a four wire power supply with neutral.
Reheat pump is rated 265 vac and is wired between one hot leg and neutral.

Table 4e: Tranquility 20 (TS) Series Electrical Data - (ECM Motor & ClimaDry)

All TS Units with ECM Fan Motor								TS Units (ECM)			TS Units with ECM Fan Motor and ClimaDry			
Model	Voltage Code	Rated Voltage	Voltage Min/Max	Compressor			Fan Motor FLA	Total Unit FLA	Min Circuit Amp	Max Fuse/ HACR	Reheat Pump FLA	Total Unit FLA	Min Circuit Amp	Max Fuse/ HACR
				QTY	RLA	LRA								
TS 018	G	208-230/60/1	197/254	1	9.0	48.0	3.9	12.9	15.2	20	0.8	13.7	16.0	20
	E	265/60/1	239/292	1	8.4	40.0	3.2	11.6	13.7	20	0.7	12.3	14.4	20
TS 024	G	208-230/60/1	197/254	1	12.8	60.0	3.9	16.7	19.9	30	0.8	17.5	20.7	30
	E	265/60/1	239/292	1	10.9	58.0	3.2	14.1	16.8	25	0.7	14.8	17.5	25
	H	208-230/60/3	197/254	1	8.0	55.0	3.9	11.9	13.9	20	0.8	12.7	14.7	20
	F*	460/60/3*	414/506	1	4.0	22.4	3.2	7.2	8.2	15	0.7	7.9	8.9	15
TS 030	G	208-230/60/1	197/254	1	13.5	61.0	3.9	17.4	20.8	30	0.8	18.2	21.6	35
	E	265/60/1	239/292	1	10.9	58.0	3.2	14.1	16.8	25	0.7	14.8	17.5	25
	H	208-230/60/3	197/254	1	8.3	63.0	3.9	12.2	14.3	20	0.8	13.0	15.1	20
	F*	460/60/3*	414/506	1	4.5	27.0	3.2	7.7	8.8	15	0.7	8.4	9.5	15
TS 036	G	208-230/60/1	197/254	1	14.7	72.5	3.9	18.6	22.3	35	0.8	19.4	23.1	35
	E	265/60/1	239/292	1	12.5	61.0	3.2	15.7	18.8	30	0.7	16.4	19.5	30
	H	208-230/60/3	197/254	1	10.4	63.0	3.9	14.3	16.9	25	0.8	15.1	17.7	25
	F*	460/60/3*	414/506	1	4.5	32.0	3.2	7.7	8.8	15	0.7	8.4	9.5	15
TS 042	G	208-230/60/1	197/254	1	15.4	83.0	3.9	19.3	23.2	35	0.8	20.1	24.0	35
	H	208-230/60/3	197/254	1	11.5	77.0	3.9	15.4	18.3	25	0.8	16.2	19.1	30
	F*	460/60/3*	414/506	1	5.1	35.0	3.2	8.3	9.6	15	0.7	9.0	10.3	15
TS 048	G	208-230/60/1	197/254	1	20.5	109.0	6.9	27.4	32.5	50	1.07	28.5	33.6	50
	H	208-230/60/3	197/254	1	14.6	91.0	6.9	21.5	25.2	35	1.07	22.6	26.2	40
	F*	460/60/3*	414/506	1	7.1	46.0	6.0	13.1	14.9	20	1.07	14.2	15.9	20
TS 060	G	208-230/60/1	197/254	1	26.9	145.0	6.9	33.8	40.5	60	1.07	34.9	41.6	60
	H	208-230/60/3	197/254	1	17.6	123.0	6.9	24.5	28.9	45	1.07	25.6	30.0	45
	F*	460/60/3*	414/506	1	9.6	64.0	6.0	15.6	18.0	25	1.07	16.7	19.1	25
TS 070	G	208-230/60/1	197/254	1	30.1	158.0	6.9	37.0	44.5	70	1.07	38.1	45.6	70
	H	208-230/60/3	197/254	1	20.5	155.0	6.9	27.4	32.5	50	1.07	28.5	33.6	50
	F*	460/60/3*	414/506	1	9.6	75.0	6.0	15.6	18.0	25	1.07	16.7	19.1	25

* NEUTRAL CONNECTION REQUIRED! All F Voltage (460 vac) units with ECM motors/ClimaDry require a four wire power supply with neutral.
ECM motors/reheat pumps are rated 265 vac and are wired between one hot leg and neutral.

Table 4f: Tranquility 20 (TS) Series Electrical Data - (PSC Motor & Secondary Pump)

All TS Units with Standard PSC Motor								TS Units (PSC)			TS Units with PSC Fan Motor and Secondary Pump			
Model	Voltage Code	Rated Voltage	Voltage Min/ Max	Compressor			Fan Motor FLA	Total Unit FLA	Min Circuit Amp	Max Fuse/ HACR	Pump FLA	Total Unit FLA	Min Circuit Amp	Max Fuse/ HACR
				QTY	RLA	LRA								
TS 006	G	208-230/60/1	197/254	1	3.1	17.7	0.4	3.5	4.3	15	0.43	3.9	4.7	15
	E	265/60/1	239/292	1	2.6	13.5	0.4	3.0	3.6	15	0.7	3.7	4.3	15
TS 009	G	208-230/60/1	197/254	1	3.9	21.0	0.4	4.3	5.3	15	0.43	4.8	5.7	15
	E	265/60/1	239/292	1	3.7	22.0	0.4	4.1	5.0	15	N/A	N/A	N/A	N/A
TS 012	G	208-230/60/1	197/254	1	5.0	25.0	0.7	5.7	7.0	15	0.43	6.1	7.4	15
	E	265/60/1	239/292	1	4.5	22.0	0.7	5.2	6.4	15	N/A	N/A	N/A	N/A
TS 018	G	208-230/60/1	197/254	1	9.0	48.0	1.0	10.0	12.3	20	0.43	10.4	12.7	20
	E	265/60/1	239/292	1	8.4	40.0	0.9	9.3	11.4	15	N/A	N/A	N/A	N/A
TS 024	G	208-230/60/1	197/254	1	12.8	60.0	1.1	13.9	17.1	25	0.43	14.3	17.5	30
	E	265/60/1	239/292	1	10.9	58.0	0.9	11.8	14.5	25	0.7	12.5	15.2	25
	H	208-230/60/3	197/254	1	8.0	55.0	1.1	9.1	11.1	15	0.43	9.5	11.5	15
	F*	460/60/3*	414/506	1	4.0	22.4	0.6	4.6	5.6	15	N/A	N/A	N/A	N/A
TS 030	G	208-230/60/1	197/254	1	13.5	61.0	1.4	14.9	18.3	30	0.8	15.7	19.1	30
	E	265/60/1	239/292	1	10.9	58.0	1.6	12.5	15.2	25	0.7	13.2	15.9	25
	H	208-230/60/3	197/254	1	8.3	63.0	1.4	9.7	11.8	20	0.8	10.5	12.6	20
	F*	460/60/3*	414/506	1	4.5	27.0	0.9	5.4	6.5	15	0.7	6.1	7.2	15
TS 036	G	208-230/60/1	197/254	1	14.7	72.5	2.1	16.8	20.5	35	0.8	17.6	21.3	35
	E	265/60/1	239/292	1	12.5	61.0	2.2	14.7	17.8	30	0.7	15.4	18.5	30
	H	208-230/60/3	197/254	1	10.4	63.0	2.1	12.5	15.1	25	0.8	13.3	15.9	25
	F*	460/60/3*	414/506	1	4.5	32.0	1.3	5.8	6.9	15	0.7	6.5	7.6	15
TS 042	G	208-230/60/1	197/254	1	15.4	83.0	2.1	17.5	21.4	35	0.8	18.3	22.2	35
	H	208-230/60/3	197/254	1	11.5	77.0	2.1	13.6	16.5	25	0.8	14.4	17.3	25
	F*	460/60/3*	414/506	1	5.1	35.0	1.0	6.1	7.4	15	0.7	6.8	8.1	15
	N	575/60/3	518/633	1	4.3	31.0	0.8	5.1	6.2	15	N/A	N/A	N/A	N/A
TS 048	G	208-230/60/1	197/254	1	20.5	109.0	3.0	23.5	28.6	45	0.8	24.3	29.4	45
	H	208-230/60/3	197/254	1	14.6	91.0	3.0	17.6	21.3	35	0.8	18.4	22.1	35
	F*	460/60/3*	414/506	1	7.1	46.0	1.7	8.8	10.6	15	0.7	9.5	11.3	15
	N	575/60/3	518/633	1	5.1	34.1	1.4	6.5	7.8	15	N/A	N/A	N/A	N/A
TS 060	G	208-230/60/1	197/254	1	26.9	145.0	4.9	31.8	38.5	60	1.07	32.9	39.6	60
	H	208-230/60/3	197/254	1	17.6	123.0	4.9	22.5	26.9	40	1.07	23.6	28.0	45
	F*	460/60/3*	414/506	1	9.6	64.0	2.5	12.1	14.5	20	1.07	13.2	15.6	25
	N	575/60/3	518/633	1	6.1	40.0	1.9	8.0	9.5	15	N/A	N/A	N/A	N/A
TS 070	G	208-230/60/1	197/254	1	30.1	158.0	5.8	35.9	43.4	70	1.07	37.0	44.5	70
	H	208-230/60/3	197/254	1	20.5	155.0	5.8	26.3	31.4	50	1.07	27.4	32.5	50
	F*	460/60/3*	414/506	1	9.6	75.0	2.6	12.2	14.6	20	1.07	13.3	15.7	25
	N	575/60/3	518/633	1	7.6	54.0	2.3	9.9	11.8	15	N/A	N/A	N/A	N/A

* NEUTRAL CONNECTION REQUIRED! All F Voltage (460 vac) units with internal secondary circulators require a four wire power supply with neutral. Internal secondary circulators are rated 265 vac and are wired between one hot leg and neutral.

Table 4g: Tranquility 20 (TS) Series Electrical Data - (PSC High Static Motor & Secondary Pump)

All TS Units with High Static PSC Fan Motor								TS (H.S. PSC) Units			TS Units with H.S. PSC Fan Motor and Secondary Pump			
Model	Voltage Code	Rated Voltage	Voltage Min/ Max	Compressor			Fan Motor FLA	Total Unit FLA	Min Circuit Amp	Max Fuse/ HACR	Pump FLA	Total Unit FLA	Min Circuit Amp	Max Fuse/ HACR
				QTY	RLA	LRA								
TS 018	G	208-230/60/1	197/254	1	9.0	48.0	1.1	10.1	12.4	20	0.43	10.5	12.8	20
	E	265/60/1	239/292	1	8.4	40.0	0.9	9.3	11.4	15	N/A	N/A	N/A	N/A
TS 024	G	208-230/60/1	197/254	1	12.8	60.0	1.4	14.2	17.4	30	0.43	14.6	17.8	30
	E	265/60/1	239/262	1	10.9	58.0	1.6	12.5	15.2	25	0.7	13.2	15.9	25
	H	208-230/60/3	197/254	1	8.0	55.0	1.4	9.4	11.4	15	0.43	9.8	11.8	15
	F*	460/60/3*	414/506	1	4.0	22.4	0.9	4.9	5.9	15	N/A	N/A	N/A	N/A
TS 030	G	208-230/60/1	197/254	1	13.5	61.0	1.8	15.3	18.7	30	0.8	16.1	19.5	30
	E	265/60/1	239/292	1	10.9	58.0	2.0	12.9	15.6	25	0.7	13.6	16.3	25
	H	208-230/60/3	197/254	1	8.3	63.0	1.8	10.1	12.2	20	0.8	10.9	13.0	20
	F*	460/60/3*	414/506	1	4.5	27.0	1.24	5.7	6.9	15	0.7	6.4	7.6	15
TS 036	G	208-230/60/1	197/254	1	14.7	72.5	2.0	16.7	20.4	35	0.8	17.5	21.2	35
	E	265/60/1	239/292	1	12.5	61.0	2.2	14.7	17.8	30	0.7	15.4	18.5	30
	H	208-230/60/3	197/254	1	10.4	63.0	2.0	12.4	15.0	25	0.8	13.2	15.8	25
	F*	460/60/3*	414/506	1	4.5	32.0	1.0	5.5	6.6	15	0.7	6.2	7.3	15
TS 042	G	208-230/60/1	197/254	1	15.4	83.0	3.0	18.4	22.3	35	0.8	19.2	23.1	35
	H	208-230/60/3	197/254	1	11.5	77.0	3.0	14.5	17.4	25	0.8	15.3	18.2	25
	F*	460/60/3*	414/506	1	5.1	35.0	1.7	6.8	8.1	15	0.7	7.5	8.8	15
	N	575/60/3	518/633	1	4.3	31.0	1.4	5.7	6.8	15	N/A	N/A	N/A	N/A
TS 048	G	208-230/60/1	197/254	1	20.5	109.0	3.4	23.9	29.0	45	0.8	24.7	29.8	50
	H	208-230/60/3	197/254	1	14.6	91.0	3.4	18.0	21.7	35	0.8	18.8	22.5	35
	F*	460/60/3*	414/506	1	7.1	46.0	1.8	8.9	10.7	15	0.7	9.6	11.4	15
	N	575/60/3	518/633	1	5.1	34.1	1.4	6.5	7.8	15	N/A	N/A	N/A	N/A
TS 060	G	208-230/60/1	197/254	1	26.9	145.0	5.8	32.7	39.4	60	1.07	33.8	40.5	60
	H	208-230/60/3	197/254	1	17.6	123.0	5.8	23.4	27.8	45	1.07	24.5	28.9	45
	F*	460/60/3*	414/506	1	9.6	64.0	2.6	12.2	14.6	20	1.07	13.3	15.7	25
	N	575/60/3	518/633	1	6.1	40.0	2.3	8.4	9.9	15	N/A	N/A	N/A	N/A

* NEUTRAL CONNECTION REQUIRED! All F Voltage (460 vac) units with internal secondary circulators require a four wire power supply with neutral. Internal secondary circulators are rated 265 vac and are wired between one hot leg and neutral.

Table 4h: Tranquility 20 (TS) Series Electrical Data - (ECM Motor & Secondary Pump)

All TS Units with ECM Fan Motor								TS Units (ECM)			TS Units with ECM Fan Motor and Secondary Pump			
Model	Voltage Code	Rated Voltage	Voltage Min/Max	Compressor			Fan Motor FLA	Total Unit FLA	Min Circuit Amp	Max Fuse/ HACR	Pump FLA	Total Unit FLA	Min Circuit Amp	Max Fuse/ HACR
				QTY	RLA	LRA								
TS 018	G	208-230/60/1	197/254	1	9.0	48.0	3.9	12.9	15.2	20	0.43	13.3	15.6	20
	E	265/60/1	239/292	1	8.4	40.0	3.2	11.6	13.7	20	N/A	N/A	N/A	N/A
TS 024	G	208-230/60/1	197/254	1	12.8	60.0	3.9	16.7	19.9	30	0.43	17.1	20.3	30
	E	265/60/1	239/292	1	10.9	58.0	3.2	14.1	16.8	25	0.7	14.8	17.5	25
	H	208-230/60/3	197/254	1	8.0	55.0	3.9	11.9	13.9	20	0.43	12.3	14.3	20
	F*	460/60/3*	414/506	1	4.0	22.4	3.2	7.2	8.2	15	N/A	N/A	N/A	N/A
TS 030	G	208-230/60/1	197/254	1	13.5	61.0	3.9	17.4	20.8	30	0.8	18.2	21.6	35
	E	265/60/1	239/292	1	10.9	58.0	3.2	14.1	16.8	25	0.7	14.8	17.5	25
	H	208-230/60/3	197/254	1	8.3	63.0	3.9	12.2	14.3	20	0.8	13.0	15.1	20
	F*	460/60/3*	414/506	1	4.5	27.0	3.2	7.7	8.8	15	0.7	8.4	9.5	15
TS 036	G	208-230/60/1	197/254	1	14.7	72.5	3.9	18.6	22.3	35	0.8	19.4	23.1	35
	E	265/60/1	239/292	1	12.5	61.0	3.2	15.7	18.8	30	0.7	16.4	19.5	30
	H	208-230/60/3	197/254	1	10.4	63.0	3.9	14.3	16.9	25	0.8	15.1	17.7	25
	F*	460/60/3*	414/506	1	4.5	32.0	3.2	7.7	8.8	15	0.7	8.4	9.5	15
TS 042	G	208-230/60/1	197/254	1	15.4	83.0	3.9	19.3	23.2	35	0.8	20.1	24.0	35
	H	208-230/60/3	197/254	1	11.5	77.0	3.9	15.4	18.3	25	0.8	16.2	19.1	30
	F*	460/60/3*	414/506	1	5.1	35.0	3.2	8.3	9.6	15	0.7	9.0	10.3	15
TS 048	G	208-230/60/1	197/254	1	20.5	109.0	6.9	27.4	32.5	50	0.8	28.5	33.6	50
	H	208-230/60/3	197/254	1	14.6	91.0	6.9	21.5	25.2	35	0.8	22.6	26.2	40
	F*	460/60/3*	414/506	1	7.1	46.0	6.0	13.1	14.9	20	0.7	14.2	15.9	20
TS 060	G	208-230/60/1	197/254	1	26.9	145.0	6.9	33.8	40.5	60	1.07	34.9	41.6	60
	H	208-230/60/3	197/254	1	17.6	123.0	6.9	24.5	28.9	45	1.07	25.6	30.0	45
	F*	460/60/3*	414/506	1	9.6	64.0	6.0	15.6	18.0	25	1.07	16.7	19.1	25
TS 070	G	208-230/60/1	197/254	1	30.1	158.0	6.9	37.0	44.5	70	1.07	38.1	45.6	70
	H	208-230/60/3	197/254	1	20.5	155.0	6.9	27.4	32.5	50	1.07	28.5	33.6	50
	F*	460/60/3*	414/506	1	9.6	75.0	6.0	15.6	18.0	25	1.07	16.7	19.1	25

* NEUTRAL CONNECTION REQUIRED! All F Voltage (460 vac) units with ECM motors/internal secondary circulators require a four wire power supply with neutral. ECM motors/internal secondary circulators are rated 265 vac and are wired between one hot leg and neutral.

Table 4j: Tranquility (TR/TC) Series Electrical Data - (Standard 60Hz Units)

Model	Voltage Code	Rated Voltage	Voltage Min/ Max	Compressor			Fan Motor FLA	Total Unit FLA	Min Circuit Amp	Max Fuse/ HACR
				QTY	RLA	LRA				
TC 006	G	208-230/60/1	197/254	1	3.3	17.7	0.40	3.7	4.5	15
	E	265/60/1	239/292	1	2.9	13.5	0.40	3.3	4.0	15
TC 009	G	208-230/60/1	197/254	1	5.6	22.2	0.80	6.4	7.8	15
	E	265/60/1	239/292	1	3.8	18.8	0.70	4.5	5.5	15
TC 012	G	208-230/60/1	197/254	1	5.1	32.5	0.80	5.9	7.2	15
	E	265/60/1	239/292	1	4.0	31.5	0.70	4.7	5.7	15
TC 015	G	208-230/60/1	197/254	1	6.0	29.0	1.00	7.0	8.5	15
	E	265/60/1	239/292	1	5.4	28.0	0.86	6.3	7.6	15
TC 018	G	208-230/60/1	197/254	1	7.2	33.0	1.00	8.2	10.0	15
	E	265/60/1	239/292	1	5.9	28.0	0.86	6.8	8.2	15
TC 024	G	208-230/60/1	197/254	1	12.8	58.3	1.50	14.3	17.5	30
	E	265/60/1	239/292	1	9.6	54.0	1.30	10.9	13.3	20
TC 030	G	208-230/60/1	197/254	1	14.1	73.0	3.00	17.1	20.6	30
	E	265/60/1	239/292	1	11.2	60.0	2.70	13.9	16.7	25
	H	208-230/60/3	197/254	1	8.9	58.0	3.00	11.9	14.1	20
	F	460/60/3	414/506	1	4.2	28.0	1.70	5.9	7.0	15
TC 036	G	208-230/60/1	197/254	1	16.7	79.0	1.80	18.5	22.7	35
	E	265/60/1	239/292	1	13.5	72.0	2.00	15.5	18.9	30
	H	208-230/60/3	197/254	1	10.4	73.0	1.80	12.2	14.8	25
	F	460/60/3	414/506	1	5.8	38.0	1.24	7.0	8.5	15
TC 042	G	208-230/60/1	197/254	1	17.9	112.0	3.00	20.9	25.4	40
	H	208-230/60/3	197/254	1	13.5	88.0	3.00	16.5	19.9	30
	F	460/60/3	414/506	1	6.0	44.0	1.70	7.7	9.2	15
	N	575/60/3	518/633	1	4.9	34.0	1.40	6.3	7.5	15
TC 048	G	208-230/60/1	197/254	1	21.8	117.0	3.40	25.2	30.7	50
	H	208-230/60/3	197/254	1	13.7	83.1	3.40	17.1	20.5	30
	F	460/60/3	414/506	1	6.2	41.0	1.80	8.0	9.6	15
	N	575/60/3	518/633	1	4.8	33.0	1.40	6.2	7.4	15
TC 060	G	208-230/60/1	197/254	1	26.3	134.0	4.90	31.2	37.8	60
	H	208-230/60/3	197/254	1	15.6	110.0	4.90	20.5	24.4	40
	F	460/60/3	414/506	1	7.8	52.0	2.50	10.3	12.3	20
	N	575/60/3	518/633	1	5.8	38.9	1.90	7.7	9.2	15

HACR circuit breaker in USA only
All fuses Class RK-5

Table 4k: Tranquility TR Series Electrical Data with Secondary Pump- (Standard 60Hz Units)

Model	Voltage Code	Rated Voltage	Voltage Min/ Max	Compressor			Fan Motor FLA	Total Unit FLA	Pump FLA	Min Circuit Amp	Max Fuse/ HACR
				QTY	RLA	LRA					
TR 006	G	208-230/60/1	197/254	1	3.3	17.7	0.40	4.1	0.4	4.9	15
	E	265/60/1	239/292	1	2.9	13.5	0.40	4.0	0.7	4.7	15
TR 009	G	208-230/60/1	197/254	1	4.5	22.2	0.80	5.7	0.4	6.8	15
	E	265/60/1	239/292	1	3.8	18.8	0.70	5.2	0.7	6.2	15
TR 012	G	208-230/60/1	197/254	1	5.1	32.5	0.80	6.7	0.8	8.0	15
TR 015	G	208-230/60/1	197/254	1	6.0	29.0	1.00	7.4	0.4	8.9	15
	E	265/60/1	239/292	1	5.4	28.0	0.86	7.0	0.7	8.3	15
TR 018	G	208-230/60/1	197/254	1	7.2	33.0	1.00	9.0	0.8	10.8	15
	E	265/60/1	239/292	1	5.9	28.0	0.86	7.5	0.7	8.9	15
TR 024	G	208-230/60/1	197/254	1	12.8	58.3	1.50	15.1	0.8	18.3	30
	E	265/60/1	239/292	1	9.6	54.0	1.30	11.6	0.7	14.0	20
TR 030	G	208-230/60/1	197/254	1	14.1	73.0	3.00	17.9	0.8	21.4	35
	E	265/60/1	239/292	1	11.2	60.0	2.70	14.6	0.7	17.4	25
	H	208-230/60/3	197/254	1	8.9	58.0	3.00	12.7	0.8	14.9	20
	F*	460/60/3*	414/506	1	4.2	28.0	1.70	6.6	0.7	7.7	15
TR 036	G	208-230/60/1	197/254	1	16.7	79.0	1.80	19.3	0.8	23.5	40
	E	265/60/1	239/292	1	13.5	72.0	2.00	16.2	0.7	19.6	30
	H	208-230/60/3	197/254	1	10.4	73.0	1.80	13.0	0.8	15.6	25
	F*	460/60/3*	414/506	1	5.8	38.0	1.24	7.7	0.7	9.2	15
TR 042	G	208-230/60/1	197/254	1	17.9	112.0	3.00	21.7	0.8	26.2	40
	H	208-230/60/3	197/254	1	13.5	88.0	3.00	17.3	0.8	20.7	30
	F*	460/60/3*	414/506	1	6.0	44.0	1.70	8.4	0.7	9.9	15
TR 048	G	208-230/60/1	197/254	1	21.8	117.0	3.40	26.3	1.1	31.7	50
	H	208-230/60/3	197/254	1	13.7	83.1	3.40	18.2	1.1	21.6	35
	F*	460/60/3*	414/506	1	6.2	41.0	1.80	9.1	1.1	10.6	15
TR 060	G	208-230/60/1	197/254	1	26.3	134.0	4.90	32.3	1.1	38.8	60
	H	208-230/60/3	197/254	1	15.6	110.0	4.90	21.6	1.1	25.5	40
	F*	460/60/3*	414/506	1	7.8	52.0	2.50	11.4	1.1	13.3	20

*** NEUTRAL CONNECTION REQUIRED! All F Voltage (460 vac) units with ECM motors/internal secondary circulators require a four wire power supply with neutral. ECM motors/internal secondary circulators are rated 265 vac and are wired between one hot leg and neutral.**

Table 4l: Tranquility TR Series High Static Electrical Data with Secondary Pump- (Standard 60Hz Units)

Model	Voltage Code	Rated Voltage	Voltage Min/ Max	Compressor				Fan Motor FLA	Total Unit FLA	Pump FLA	Min Circuit Amp	Max Fuse Calc	Max Fuse/ HACR
				QTY	RLA	LRA	MCC						
TR 015	G	208-230/60/1	197/254	NA	6.0	29.0	1	1.00	7.4	0.4	8.9	14.910	15
	E	265/60/1	239/292	NA	5.4	28.0	1	0.86	7.0	0.7	8.3	13.710	15
TR 018	G	208-230/60/1	197/254	NA	7.2	33.0	1	1.50	9.5	0.8	11.3	18.500	15
	E	265/60/1	239/292	NA	5.9	28.0	1	1.30	7.9	0.7	9.4	15.275	15
TR 024	G	208-230/60/1	197/254	20.0	12.8	58.3	1	3.00	16.6	0.8	19.8	32.600	30
	E	265/60/1	239/292	15.0	9.6	54.0	1	2.70	13.0	0.7	15.4	25.000	25
TR 030	G	208-230/60/1	197/254	22.0	14.1	73.0	1	3.00	17.9	0.8	21.4	35.525	35
	E	265/60/1	239/292	17.5	11.2	60.0	1	2.70	14.6	0.7	17.4	28.600	25
	H	208-230/60/3	197/254	13.9	8.9	58.0	1	3.00	12.7	0.8	14.9	23.825	20
	F*	460/60/3*	414/506	6.5	4.2	28.0	1	1.70	6.6	0.7	7.7	11.919	15
TR 036	G	208-230/60/1	197/254	26.0	16.7	79.0	1	3.00	20.5	0.8	24.7	41.375	40
	E	265/60/1	239/292	21.0	13.5	72.0	1	2.70	16.9	0.7	20.3	33.775	30
	H	208-230/60/3	197/254	16.3	10.4	73.0	1	3.00	14.2	0.8	16.8	27.200	25
	F*	460/60/3*	414/506	9.0	5.8	38.0	1	1.70	8.2	0.7	9.7	15.450	15
TR 042	G	208-230/60/1	197/254	28.0	17.9	112.0	1	3.00	21.7	0.8	26.2	44.075	40
	H	208-230/60/3	197/254	21.1	13.5	88.0	1	3.00	17.3	0.8	20.7	34.175	30
	F*	460/60/3*	414/506	9.3	6.0	44.0	1	1.70	8.4	0.7	9.9	15.900	15
TR 048	G	208-230/60/1	197/254	34.0	21.8	117.0	1	4.90	27.8	1.1	33.2	55.020	50
	H	208-230/60/3	197/254	21.4	13.7	83.1	1	4.90	19.7	1.1	23.1	36.795	35
	F*	460/60/3*	414/506	9.7	6.2	41.0	1	2.50	9.8	1.1	11.3	17.520	15
TR 060	G	208-230/60/1	197/254	41.0	26.3	134.0	1	5.80	33.2	1.1	39.7	66.045	60
	H	208-230/60/3	197/254	24.4	15.6	110.0	1	5.80	22.5	1.1	26.4	41.970	40
	F*	460/60/3*	414/506	12.1	7.8	52.0	1	2.60	11.5	1.1	13.4	21.220	20

*** NEUTRAL CONNECTION REQUIRED! All F Voltage (460 vac) units with ECM motors/internal secondary circulators require a four wire power supply with neutral. ECM motors/internal secondary circulators are rated 265 vac and are wired between one hot leg and neutral.**

Electrical - Power Wiring

⚠ WARNING! ⚠

WARNING! Disconnect electrical power source to prevent injury or death from electrical shock.

⚠ CAUTION! ⚠

CAUTION! Use only copper conductors for field installed electrical wiring. Unit terminals are not designed to accept other types of conductors.

Electrical - Line Voltage - All field installed wiring, including electrical ground, must comply with the National Electrical Code as well as all applicable local codes. Refer to the unit electrical data for fuse sizes. Consult wiring diagram for field connections that must be made by the installing (or electrical) contractor. All final electrical connections must be made with a length of flexible conduit to minimize vibration and sound transmission to the building.

General Line Voltage Wiring - Be sure the available power is the same voltage and phase shown on the unit serial plate. Line and low voltage wiring must be done in accordance with local codes or the National Electric Code, whichever is applicable.

Figure 15: TT/TS Single Phase Line Voltage Field Wiring. Three phase wiring is similar except that all three power wires are directly connected to the contactor.

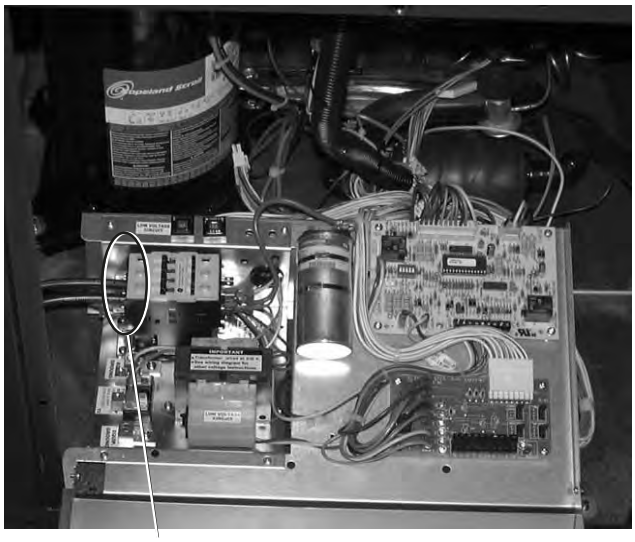

Unit Power Supply (see electrical table for wire and breaker size)

Note: 460V units with ECM motor require a neutral wire.

Figure 16: TR/TC Single Phase Line Voltage Field Wiring. Three phase wiring is similar except that all three power wires are directly connected to the contactor.

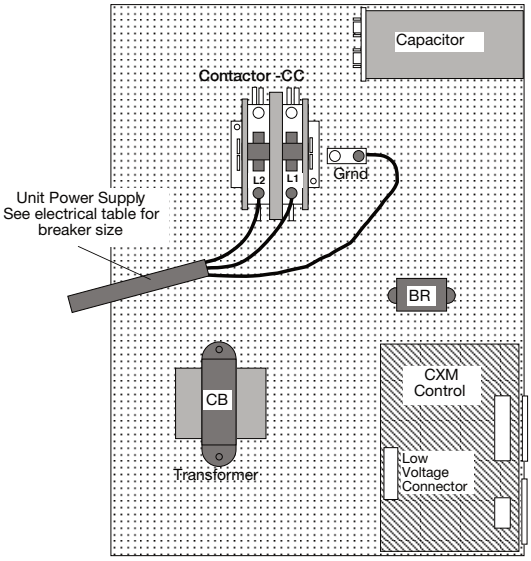

Power Connection - Line voltage connection is made by connecting the incoming line voltage wires to the "L" side of the contractor as shown in Figures 15 and 16. Consult electrical data tables for correct fuse size.

Transformer - All 208/230 voltage units are factory wired for 208 volt. If supply voltage is 230 volt, installer must rewire transformer. See wire diagram for connections.

Blower Speed Selection – Units with PSC Motor - PSC (Permanent Split Capacitor) blower fan speed can be changed by moving the blue wire on the fan motor terminal block to the desired speed as shown in Figure 17. Most ClimateMaster units are shipped on the medium speed tap. Consult submittal data or engineering design guide for specific unit airflow tables. Typical unit design delivers rated airflow at nominal static (0.15 in. w.g. [37Pa]) on medium speed and rated airflow at a higher static (0.4 to 0.5 in. w.g. [100 to 125 Pa]) on high speed for applications where higher static is required. Low speed will deliver approximately 85% of rated airflow at 0.10 in. w.g. [25 Pa]. An optional high static blower is available on some models.

Electrical - Power & Low Voltage Wiring

Special Note for AHRI Testing: To achieve rated airflow for AHRI testing purposes on all PSC products, it is necessary to change the fan speed to "HI" speed. When the heat pump has experienced less than 100 operational hours and the coil has not had sufficient time to be "seasoned", it is necessary to clean the coil with a mild surfactant such as Calgon to remove the oils left by manufacturing processes and enable the condensate to properly "sheet" off of the coil.

Figure 17: PSC Motor Speed Selection

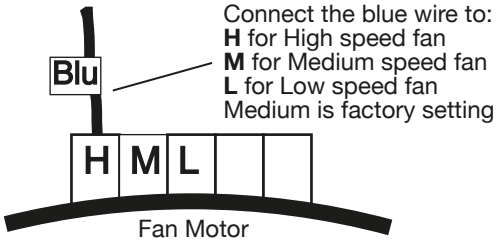

ELECTRICAL - LOW VOLTAGE WIRING

Thermostat Connections - The thermostat should be wired directly to the CXM or DXM board (units with PSC fan). Units with optional ECM motor include factory wiring from the CXM or DXM board to the ECM interface board. Thermostat wiring for these units should be connected to the ECM interface board. Figure 18 shows wiring for GS/GR/GC units; figure 19 should be used for TT/TS units with PSC or optional ECM motor. See "Electrical – Thermostat" for specific terminal connections. Review the appropriate AOM (Application, Operation and Maintenance) manual for units with DDC controls.

Figure 18: TT/TS Low Voltage Field Wiring

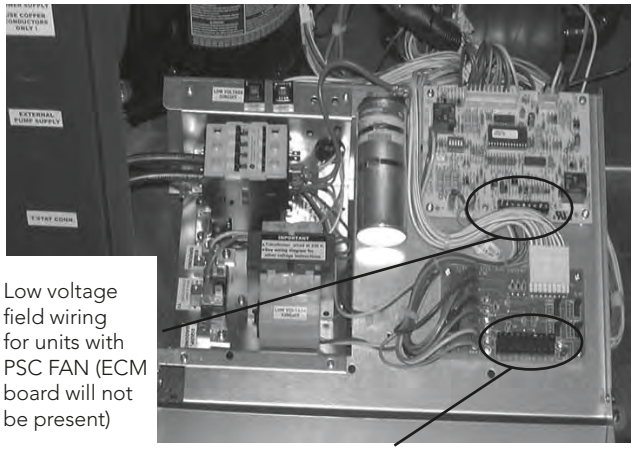

Low voltage field wiring for units with ECM fan

Low Water Temperature Cutout Selection - The CXM/DXM control allows the field selection of low water (or water-antifreeze solution) temperature limit by clipping jumper JW3, which changes the sensing temperature associated with thermistor FP1. Note that the FP1 thermistor is located on the refrigerant line between the coaxial heat exchanger and expansion device (TXV or cap tube). Therefore, FP1 is sensing refrigerant temperature, not water temperature, which is a better indication of how water flow rate/temperature is affecting the refrigeration circuit.

The factory setting for FP1 is for systems using water (30°F [-1.1°C] refrigerant temperature). In low water temperature (extended range) applications with antifreeze (most ground loops), jumper JW3 should be clipped as shown in Figure 20 to change the setting to 10°F [-12.2°C] refrigerant temperature, a more suitable temperature when using an antifreeze solution. All ClimateMaster units operating with entering water temperatures below 59°F [15°C] must include the optional water/refrigerant circuit insulation package to prevent internal condensation.

Figure 19: TR/TC Low Voltage Field Wiring

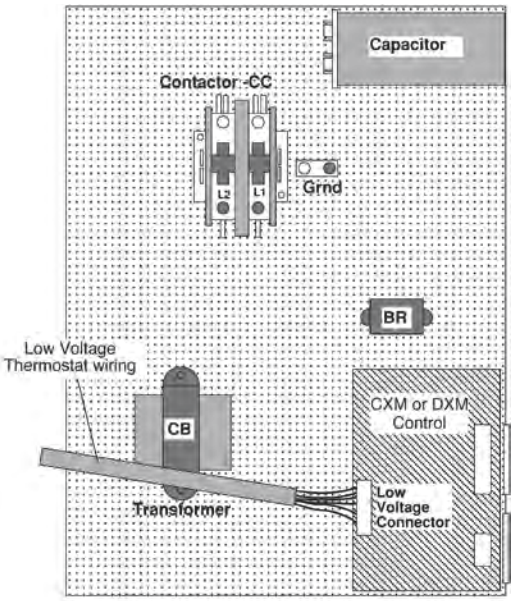

Electrical - Low Voltage Wiring

Figure 20: FP1 Limit Setting

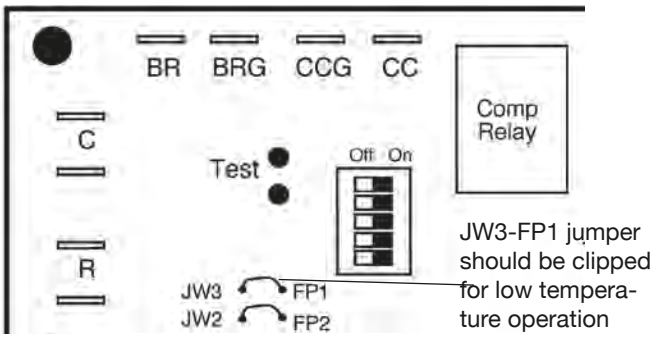

CXM PCB

Accessory Connections

A terminal paralleling the compressor contactor coil has been provided on the CXM/DXM control. Terminal "A" is designed to control accessory devices, such as water valves. Note: This terminal should be used only with 24 Volt signals and not line voltage. Terminal "A" is energized with the compressor contactor. See Figure 21 or the specific unit wiring diagram for details.

Low Voltage VA Ratings

Component	VA
Typical Blower Relay	6 - 7
Typical Reversing Valve Solenoid	4 - 6
30A Compressor Contactor	6 - 9
Subtotal	16 - 22
+ CXM board (5 - 9 VA)*	21 - 31
Remaing VA for Accessories	19 - 29
+ DXM board (8 - 12 VA)*	24 - 34
Remaing VA for Accessories	41 - 51

*Standard transformer for CXM board is 50VA. Optional DXM board and/or DDC controls include 75VA transformer.

Figure 21: Accessory Wiring

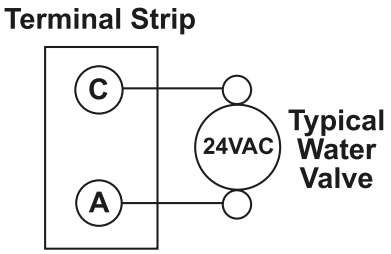

Water Solenoid Valves - An external solenoid valve(s) should be used on ground water installations to shut off flow to the unit when the compressor is not operating. A slow closing valve may be required to help reduce water hammer. Figure 21 shows typical wiring for a 24VAC external solenoid valve. Figures 22 and 23 illustrate typical slow closing water control valve wiring for Taco 500 series (ClimateMaster P/N AVM) and Taco SBV series valves. Slow closing valves take approximately 60 seconds to open (very little water will flow before 45 seconds). Once fully open, an end switch allows the compressor to be energized. Only relay or triac based electronic thermostats should be used with slow closing valves. When wired as shown, the slow closing valve will operate properly with the following notations:

1. The valve will remain open during a unit lockout.
2. The valve will draw approximately 25-35 VA through the "Y" signal of the thermostat.

Note: This valve can overheat the anticipator of an electromechanical thermostat. Therefore, only relay or triac based thermostats should be used.

Two-stage Units

Tranquility 27™ (TT) two-stage units should be designed with two parallel valves for ground water applications to limit water use during first stage operation. For example, at 1.5 gpm/ton [2.0 l/m per kW], a TT049 unit requires 6 gpm [23 l/m] for full load (2nd stage) operation, but only 4 gpm [15 l/m] during 1st stage operation. Since the unit will operate on first stage 80-90% of the time, significant water savings can be realized by using two parallel solenoid valves with two flow regulators. In the example above, stage one solenoid would be installed with a 4 gpm [15 l/m] flow regulator on the outlet, while stage two would utilize a 2 gpm [8 l/m] flow regulator. When stage one is operating, the second solenoid valve will be closed. When stage two is operating, both valves will be open, allowing full load flow rate.

Figure 24 illustrates piping for two-stage solenoid valves. Review figures 21-23 for wiring of stage one valve. Stage two valve should be wired between terminal "Y2" (ECM board) and terminal "C." NOTE: When EWT is below 50°F [10°C], 2 gpm per ton (2.6 l/m per kW) is required.

Figure 22: AVM Valve Wiring

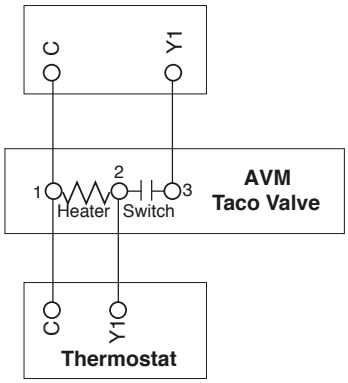

Figure 23: Taco SBV Valve Wiring

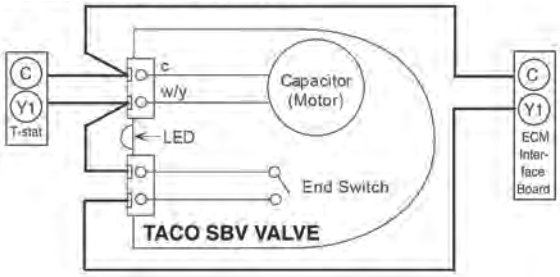

Figure 24: Two-Stage Piping

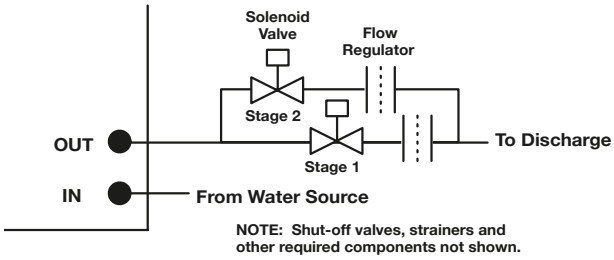

⚠ CAUTION! ⚠

CAUTION! Many units are installed with a factory or field supplied manual or electric shut-off valve. DAMAGE WILL OCCUR if shut-off valve is closed during unit operation. A high pressure switch must be installed on the heat pump side of any field provided shut-off valves and connected to the heat pump controls in series with the built-in refrigerant circuit high pressure switch to disable compressor operation if water pressure exceeds pressure switch setting. The field installed high pressure switch shall have a cut-out pressure of 300 psig and a cut-in pressure of 250 psig. This pressure switch can be ordered from ClimateMaster with a 1/4" internal flare connection as part number 39B0005N02.

Electrical - Thermostat Wiring

Thermostat Installation - The thermostat should be located on an interior wall in a larger room, away from supply duct drafts. DO NOT locate the thermostat in areas subject to sunlight, drafts or on external walls. The wire access hole behind the thermostat may in certain cases need to be sealed to prevent erroneous temperature measurement. Position the thermostat back plate against the wall so that it appears level and so the thermostat wires protrude through the middle of the back plate. Mark the position of the back plate mounting holes and drill holes with a 3/16" (5mm) bit. Install supplied anchors and secure plate to the wall. Thermostat wire must be 18 AWG wire. Representative thermostat wiring is shown in Figures 25a however, actual wiring connections should be determined from the thermostat IOM and or unit wiring diagram. Practically any heat pump thermostat will work with ClimateMaster units, provided it has the correct number of heating and cooling stages.

Figure 25a: Units With PSC Fan

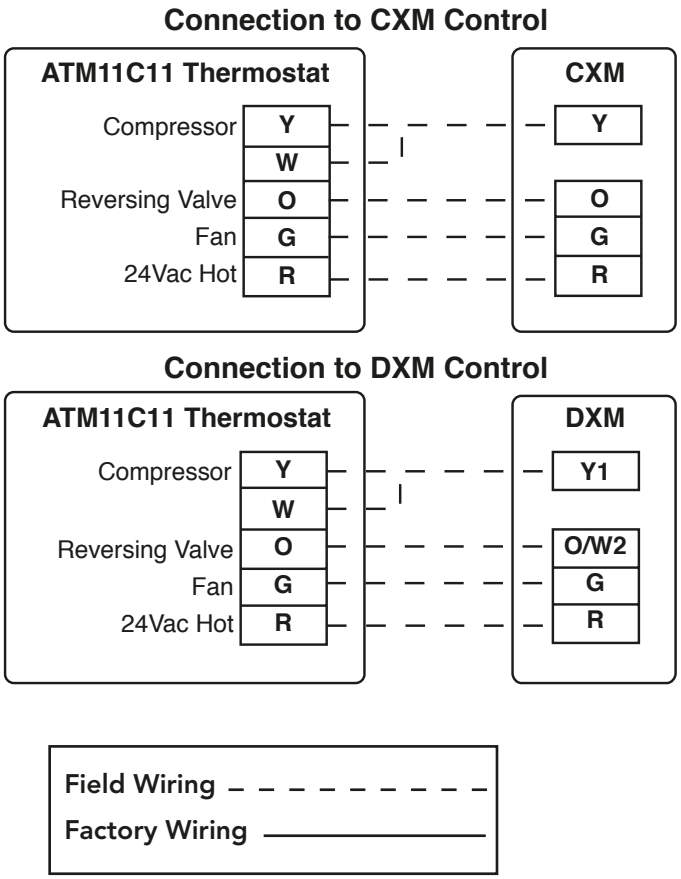

Figure 25b: Units With ECM Fan.

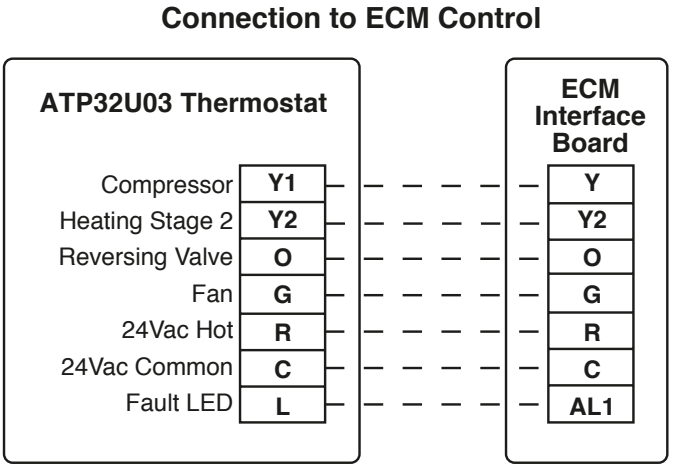

Figure 25c: Units with ClimaDry™ Reheat

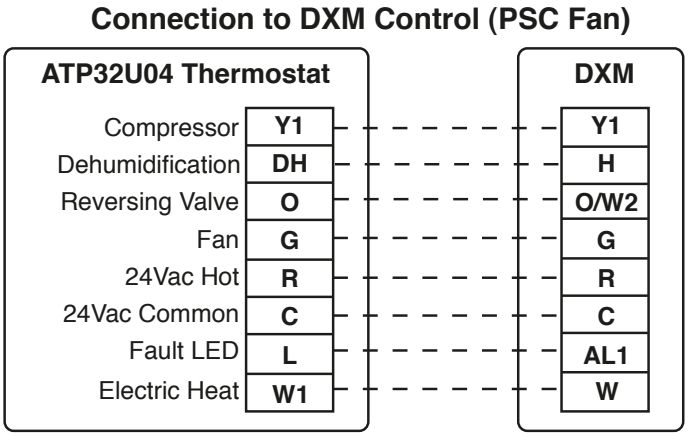

Single stage unit with ClimaDry Modulating Reheat Option and PSC fan

Blower Performance Data

TT Standard Unit - No Reheat

Airflow in CFM with wet coil and clean air filter

Model	Max ESP (in. wg)	Fan Motor (hp)	Tap Setting	Cooling Mode			Dehumid Mode			Heating Mode			Residential Units Only	
				Stg 1	Stg 2	Fan	Stg 1	Stg 2	Fan	Stg 1	Stg 2	Fan	AUX CFM	Aux/ Emerg Mode
TT 026	0.50	1/2	4	810	950	475	630	740	475	920	1060	475	4	1060
	0.50	1/2	3	725	850	425	560	660	425	825	950	425	3	950
	0.50	1/2	2	620	730	370	490	570	370	710	820	370	2	820
	0.50	1/2	1	520	610	300				600	690	300	1	690
TT 038	0.50	1/2	4	1120	1400	700	870	1090	700	1120	1400	700	4	1400
	0.50	1/2	3	1000	1250	630	780	980	630	1000	1250	630	3	1350
	0.50	1/2	2	860	1080	540	670	840	540	860	1080	540	2	1350
	0.50	1/2	1	730	900	450				730	900	450	1	1350
TT 049	0.75	1	4	1460	1730	870	1140	1350	870	1560	1850	870	4	1850
	0.75	1	3	1300	1550	780	1020	1210	780	1400	1650	780	3	1660
	0.75	1	2	1120	1330	670	870	1040	670	1200	1430	670	2	1430
	0.75	1	1	940	1120	560				1010	1200	560	1	1350
TT 064	0.75	1	4	1670	2050	1020	1300	1600	1020	1860	2280	1020	4	2280
	0.75	1	3	1500	1825	920	1160	1430	920	1650	2050	920	3	2040
	0.75	1	2	1280	1580	790	1000	1230	790	1430	1750	790	2	1750
	0.75	1	1	1080	1320	660				1200	1470	660	1	1470
TT 072	0.75	1	4	1620	2190	1050	1270	1650	1050	1690	2230	1050	4	2230
	0.75	1	3	1500	1950	980	1170	1520	980	1600	2100	980	3	2100
	0.75	1	2	1400	1830	910	1100	1420	910	1400	1850	910	2	1870
	0.75	1	1	1320	1700	850				1240	1620	850	1	1670

Factory shipped on Tap Setting 2
During Auxiliary operation (residential units only) the CFM will run at the higher if the heating (delay jumper) or AUX settings
Airflow is controlled within +/- 5% up to Max ESP shown with wet coil and standard 1" fiberglass filter
Do not select Dehumidification mode if HP CFM is on setting 1
All units AHRI/ISO/ASHRAE 13256-1 rated HP (Cooling) Delay (Heating) CFM Setting 3

Tranquility 27® (TT) Series with ClimaDry Reheat Option - All Tranquility 27® (TT) units have an ECM fan motor as a standard feature. The small additional pressure drop of the reheat coil causes the ECM motor to slightly increase RPM to overcome the added pressure drop, and maintain selected CFM up to the maximum ESP.

TS Blower Performance Data (ECM Motor) - Standard Unit - No Reheat

Airflow in CFM with wet coil and clean air filter

Model	Max ESP (in. wg)	Fan Motor (hp)	Tap Setting	Cooling Mode			Dehumid Mode			Heating Mode			Residential Units Only	
				Stg 1	Stg 2	Fan	Stg 1	Stg 2	Fan	Stg 1	Stg 2	Fan	AUX CFM	Aux/ Emerg Mode
TS 018	0.50	1/2	4	640	800	400	500	620	400	640	800	400	4	800
			3	600	750	375	470	590	375	600	750	375	3	750
			2	525	650	330	400	500	330	525	650	330	2	650
			1	450	550	280				450	550	280	1	650
TS 024	0.50	1/2	4	780	950	470	610	740	470	870	1060	470	4	1060
			3	700	850	420	540	660	420	780	950	420	3	950
			2	630	770	360	490	600	360	670	820	390	2	820
			1	550	670	300				570	690	340	1	690
TS 030	0.50	1/2	4	920	1130	560	720	880	560	1000	1230	560	4	1230
			3	820	1000	500	640	780	500	900	1100	500	3	1100
			2	740	900	450	580	700	450	800	980	450	2	980
			1	660	800	400				700	850	400	1	850
TS 036	0.50	1/2	4	1150	1400	700	900	1090	700	1150	1400	700	4	1400
			3	1020	1250	630	800	980	630	1020	1250	630	3	1350
			2	890	1080	540	690	840	540	890	1080	540	2	1350
			1	740	900	450				750	920	450	1	1350
TS 042	0.50	1/2	4	1290	1580	790	1010	1230	790	1290	1580	790	4	1580
			3	1150	1400	700	900	1090	700	1150	1400	700	3	1400
			2	1050	1280	640	820	1000	640	1020	1240	640	2	1350
			1	920	1120	560				900	1080	560	1	1350
TS 048	0.75	1	4	1420	1730	870	1110	1350	870	1520	1850	865	4	1850
			3	1270	1550	780	990	1210	780	1350	1650	775	3	1650
			2	1180	1440	720	920	1120	720	1190	1450	720	2	1450
			1	1050	1280	640				1020	1250	640	1	1350
TS 060	0.75	1	4	1680	2050	1030	1310	1600	1030	1870	2280	1030	4	2280
			3	1500	1830	910	1170	1420	910	1680	2050	910	3	2050
			2	1400	1700	850	1090	1330	850	1480	1800	850	2	1800
			1	1300	1580	790				1270	1550	790	1	1550
TS 070	0.75	1	4	1830	2230	1100	1420	1740	1100	1830	2230	1100	4	2230
			3	1600	1950	980	1250	1520	980	1720	2100	980	3	2100
			2	1440	1750	880	1120	1360	880	1670	1950	880	2	1950
			1	1200	1580	790				1460	1780	790	1	1780

See ECM control section for details on setting taps.
Bold numbers indicate factory settings.
During Auxiliary operation the CFM will run at the higher of the Heating (Delay jumper) or AUX settings.
Airflow is controlled within 5% up to the Max ESP shown with wet coil.
Do not select Dehumidification mode if HP CFM is on setting 1.
All units AHRI/ISO/ASHRAE 13256-1 rated HP CFM Setting 3.

Tranquility 20 (TS) Series with ClimaDry Reheat Option (ECM Motor) - All Tranquility 20 (TS) units with optional ECM fan motor automatically adjusts for the reheat coil. The small additional pressure drop of the reheat coil causes the ECM motor to slightly increase RPM to overcome the added pressure drop, and maintain selected CFM up to the maximum ESP.

TS Blower Performance Data
Standard Unit - No Reheat (PSC Motor)

Airflow in CFM with wet coil and clean air filter

Model	Fan Speed	Rated Airflow	Min CFM	Airflow (cfm) at External Static Pressure (in. wg)															
				0.00	0.05	0.10	0.15	0.20	0.25	0.30	0.35	0.40	0.45	0.50	0.60	0.70	0.80	0.90	1.00
TS 006	HI	240	150	317	310	305	295	285	279	271	261	250	241	230	203	168			
	MED	240	150	260	253	245	238	230	222	214	202	190	180	167					
	LO	240	150	216	206	201	196	189	177	156									
TS 009	HI	300	225	393	386	378	371	364	355	346	337	325	283	253					
	MED	300	225	366	360	353	347	341	334	326	318	310	262	230					
	LO	300	225	326	321	316	309	303	297	290	283	274	236						
TS 012	HI	350	300	520	510	500	488	479	466	453	441	403	375	347	312				
	MED	350	300	459	453	447	437	428	420	411	400	368	344	317					
	LO	350	300	371	370	368	363	358	353	345	340	315							
TS 018	HI	600	450	704	708	711	702	693	692	690	683	675	658	640	598	515			
	MED	600	450	602	601	599	590	581	583	585	579	573	560	547	492				
	LO	600	450	531	529	527	522	517	512	506	501	495	479	462					
TS 018	HS HI	600	450	894	886	877	859	841	827	812	786	760	744	728	659				
	HS MED	600	450	765	760	755	747	738	725	711	690	668	654	640	602				
	HS LO	600	450	683	672	661	649	636	616	596	584	571	560	549					
TS 024	HI	850	600	965	960	954	943	931	923	914	898	882	862	842	794	725	635		
	MED	850	600	841	833	825	817	809	800	790	777	763	747	731	686	623			
	LO	850	600	723	715	707	703	698	689	680	668	656	642	627					
TS 024	HS HI	850	600	1271	1250	1229	1207	1185	1164	1143	1118	1093	1061	1029	953	875	753		
	HS MED	850	600	1048	1037	1025	1016	1007	994	981	962	943	915	886	822	731	626		
	HS LO	850	600	890	887	884	879	874	865	855	842	829	809	789	726	660			
TS 030	HI	950	750	1271	1250	1229	1207	1185	1164	1143	1118	1093	1061	1029	953	875	753		
	MED	950	750	1048	1037	1025	1016	1007	994	981	962	943	915	886	822				
	LO	950	750	890	887	884	879	874	865	855	842	829	809	789					
TS 030	HS HI	950	750	1439	1411	1383	1355	1327	1297	1266	1232	1198	1160	1122	1041	943	830		
	HS MED	950	750	1186	1174	1162	1151	1140	1126	1112	1089	1065	1039	1013	946	870	762		
	HS LO	950	750	1039	1038	1036	1028	1020	1009	997	983	968	946	923	866	798			
TS 036	HI	1250	900	1411	1407	1402	1390	1378	1370	1361	1326	1290	1248	1205	1083	942			
	MED	1250	900	1171	1164	1156	1145	1133	1113	1092	1064	1035	997	958					
	LO	1250	900	983	967	950	943	936	936										
TS 036	HS HI	1250	900	1648	1633	1617	1597	1576	1557	1537	1493	1448	1397	1345	1207	1051	957		
	HS MED	1250	900	1344	1335	1325	1312	1299	1276	1253	1220	1186	1143	1099	1007	903			
	HS LO	1250	900	1141	1128	1115	1106	1097	1077	1057	1031	1005	966	926					
TS 042	HI	1400	1050	1634	1626	1618	1606	1594	1583	1571	1539	1507	1464	1420	1265	1078			
	MED	1400	1050	1332	1323	1314	1298	1282	1263	1243	1206	1169	1115	1060					
	LO	1400	1050	1130	1109	1088	1086	1084	1066	1048	1052	1055							
TS 042	HS HI	1400	1050	1798	1781	1764	1738	1711	1688	1665	1630	1595	1555	1514	1420	1239			
	HS MED	1400	1050	1384	1382	1379	1375	1371	1356	1341	1318	1294	1261	1227					
	HS LO	1400	1050	1091	1088	1084	1081	1078	1069	1060									
TS 048	HI	1600	1200	1798	1781	1764	1738	1711	1688	1665	1630	1595	1555	1514	1420	1239			
	MED	1600	1200	1384	1382	1379	1375	1371	1356	1341	1318	1294	1261	1227					
	LO	1600	1200																
TS 048	HS HI	1600	1200	2011	1977	1942	1923	1903	1841	1778	1755	1732	1689	1645	1520	1431	1307	1211	
	HS MED	1600	1200	1881	1858	1834	1807	1780	1746	1711	1676	1640	1604	1567	1469	1378	1286		
	HS LO	1600	1200	1738	1716	1694	1673	1651	1634	1617	1584	1551	1508	1465	1390	1321	1228		
TS 060	HI	1950	1500	2311	2306	2300	2290	2279	2268	2257	2233	2209	2175	2140	2088	1990	1901	1856	1752
	MED	1950	1500	2058	2049	2039	2028	2016	2000	1983	1966	1949	1935	1920	1874	1807	1750	1670	1582
	LO	1950	1500	1868	1863	1858	1858	1858	1848	1838	1822	1806	1799	1792	1749	1699	1636	1570	
TS 060	HS HI	1950	1500	2510	2498	2486	2471	2455	2440	2424	2401	2377	2348	2318	2247	2161	2078	1986	1855
	HS MED	1950	1500	2171	2167	2162	2162	2162	2158	2153	2135	2117	2101	2085	2024	1971	1891	1823	1691
	HS LO	1950	1500	2010	2008	2006	2006	2006	2006	2006	1992	1977	1962	1947	1892	1851	1782	1705	1600
TS 070	HI	2100	1800	2510	2498	2486	2471	2455	2440	2424	2401	2377	2348	2318	2247	2161	2078	1986	1855
	MED	2100	1800	2171	2167	2162	2162	2162	2158	2153	2135	2117	2101	2085	2024	1971	1891	1823	
	LO	2100	1800	2010	2008	2006	2006	2006	2006	2006	1992	1977	1962	1947	1892	1851			

Black areas denote ESP where operation is not recommended.
Units factory shipped on medium speed. Other speeds require field selection.
All airflow is rated and shown above at the lower voltage if unit is dual voltage rated, e.g. 208V for 208-230V units.
Only two speed fan (H & M) available on 575V units.
Performance stated is at the rated power supply, performance may vary as the power supply varies from the rated.

TS Blower Performance Data
Units With ClimaDry (PSC Motor)

Coil Face Velocity FPM	TSH/V/D with Reheat ESP Loss				
	TSH/V/D 018 In. of Water	TSH/V/D 024, 030 In. of Water	TSH/V/D 036 In. of Water	TSH/V/D 042, 048 In. of Water	TSH/V/D 060, 070 In. of Water
200	0.037	0.033	0.031	0.028	0.026
250	0.052	0.046	0.042	0.038	0.034
300	0.077	0.066	0.059	0.051	0.044
350	0.113	0.096	0.085	0.073	0.061
400	0.181	0.160	0.145	0.131	0.117
450	0.242	0.226	0.215	0.205	0.194
500	0.360	0.345	0.335	0.326	0.316

For TS units with ClimaDry Reheat coil applications, calculate face velocity of the entering air. From the table above, find ESP for Reheat application. The loss includes wet coil loss.

Example:
Reheat coil loss can be determined from the above table. Coil velocity (FPM) = Airflow (CFM) / Face Area (sq. ft.)

1. TSH036 has a face area of 4.86 sq. ft. (see physical data table).
2. At 1,100 cfm, coil velocity (FPM) = 1,100 / 4.86 = 226 FPM
3. From above table, it will be necessary to subtract 0.037 from the blower performance ESP.
4. On medium speed, the TSH036 (without reheat - see blower table) can deliver 1,100 CFM at 0.28 in. wg. with the standard PSC motor; with the reheat coil, it now delivers 1,085 CFM at 0.28 in. wg. or 1,100 CFM at 0.24 in. wg.
5. If the decrease in airflow is acceptable, no changes are necessary. Otherwise, high speed fan should be used to overcome the pressure drop of the reheat coil.

TC Blower Performance Data

Airflow in CFM with wet coil and clean air filter

Model	Fan Speed	Rated Airflow	Min CFM	Airflow (cfm) at External Static Pressure (in. wg)															
				0.00	0.05	0.10	0.15	0.20	0.25	0.30	0.35	0.40	0.45	0.50	0.60	0.70	0.80	0.90	1.00
TC 006	HI	220	150			310	300	290	280	270	250	230	210	180					
	MED					260	250	240	230	210	200	190	150						
	LOW					210	200	190	180	160	150								
TC 009	HI	325	225			410	400	380	360	350	330	320	300	280					
	MED					390	370	360	340	320	310	290	280	260					
	LOW					340	330	322	310	300	280	260	250						
TC 012	HI	400	300			470	460	450	440	430	420	400	390	380	320				
	MED					420	410	400	390	380	370	360	350	340					
	LOW					360	360	350	340	320	320	310	300						
TC 015	HI	525	375			745	725	706	696	686	666	637	588	539	451				
	MED			686	676	666	657	647	637	617	608	588	549	510					
	LOW			608	598	588	578	568	559	549	529	510	480	451					
TC 015	HS HI	525	375				774	764	755	745	735	715	696	676	637	519			
	HS MED			735	725	706	696	686	676	657	657	647	637	617	588	480			
	HS LOW			657	647	627	617	608	598	588	578	568	568	559	519				
TC 018	HI	600	450			745	725	706	696	686	666	637	588	539	451				
	MED			686	676	666	657	647	637	617	608	588	549	510					
	LOW			608	598	588	578	568	559	549	529	510	480	451					
TC 018	HS HI	600	450				774	764	755	745	735	715	696	676	637	519			
	HS MED			735	725	706	696	686	676	657	657	647	637	617	588	480			
	HS LOW			657	647	627	617	608	598	588	578	568	568	559	519				
TC 024	HI	800	600									950	922	884	827	732	656		
	MED			960	950	941	931	912	893	874	855	836	817	789	732	665			
	LOW			779	770	760	751	741	732	722	713	694	684	665	618				
TC 024	HS HI	800	600											979	903	798	665		
	HS MED											988	960	922	846	713			
	HS LOW							979	960	931	912	884	855	827	751	675			
TC 030	HI	1000	750							1102	1074	1045	1017	979	903	798			
	MED			1188	1169	1140	1121	1093	1064	1036	1017	988	960	922	846				
	LOW			1064	1045	1017	998	979	960	931	912	884	855	827	751				
TC 030	HS HI	1000	750											1102	988	874	760		
	HS MED											1074	1026	979	884	779			
	HS LOW			998	988	979	960	941	931	912	893	865	836	798					
TC 036	HI	1200	900	1474	1455	1436	1416	1387	1358	1329	1310	1280	1232	1174	1077	931			
	MED			1174	1164	1106	1106	1096	1096	1086	1077	1067	1038	1009	912				
	LOW			980	980	970	970	960	960	951	951	941	922	902					
TC 036	HS HI	1200	900									1484	1455	1426	1358	1251	1135	931	
	HS MED			1319	1310	1300	1290	1280	1271	1261	1242	1222	1213	1193	1116	1038			
	HS LOW			999	989	980	980	970	970	960	951	931	922	902					
TC 042	HI	1350	1050	1558	1530	1501	1473	1444	1416	1378	1340	1302	1264	1226	1131				
	MED			1416	1397	1368	1349	1321	1302	1273	1245	1207	1169	1131	1064				
	LOW			1083	1083	1074	1074	1064	1055										
TC 042	HS HI	1350	1050					1473	1463	1444	1425	1397	1387	1378	1311	1178			
	HS MED			1321	1311	1302	1292	1283	1273	1254	1245	1235	1216	1188	1121				
	HS LOW																		
TC 048	HI	1600	1200					1881	1853	1815	1767	1710	1653	1596	1416	1216	1216		
	MED			1843	1824	1805	1786	1767	1729	1682	1653	1625	1577	1520	1340				
	LOW			1682	1663	1644	1625	1606	1587	1568	1530	1492	1435	1378	1264				
TC 048	HS HI	1600	1200									1957	1938	1910	1862	1786	1701	1577	1435
	HS MED			1948	1948	1938	1919	1891	1872	1843	1824	1796	1767	1739	1691	1625	1539	1416	1254
	HS LOW			1758	1758	1748	1739	1720	1710	1691	1672	1644	1615	1587	1520	1435	1311		
TC 060	HI	2000	1500	2195	2195	2185	2176	2156	2117	2078	2048	2019	1999	1970	1921	1842	1754	1627	
	MED			2009	2009	1999	1980	1950	1931	1901	1882	1852	1823	1793	1744	1676	1588		
	LOW			1813	1813	1803	1793	1774	1764	1744	1725	1695	1666	1637	1568				
TC 060	HS HI	2000	1500	2352	2352	2342	2332	2323	2313	2293	2274	2254	2225	2195	2156	2087	2019	1940	1852
	HS MED			2117	2117	2107	2107	2097	2068	2038	2019	1999	1989	1980	1940	1891	1842	1460	1715
	HS LOW			1891	1891	1882	1882	1872	1862	1852	1852	1842	1833	1813	1793	1764	1715	1666	1588

Black areas denote ESP where operation is not recommended.
Units factory shipped on medium speed. Other speeds require field selection.
All airflow is rated and shown above at the lower voltage if unit is dual voltage rated, e.g. 208V for 208-230V units.
Only two speed fan (H & M) available on 575V units.
Performance stated is at the rated power supply, performance may vary as the power supply varies from the rated.

TR Blower Performance Data
Standard Unit

Model	Fan Speed	Rated Airflow	Min CFM	Airflow (cfm) at External Static Pressure (in. wg)															
				0.00	0.05	0.10	0.15	0.20	0.25	0.30	0.35	0.40	0.45	0.50	0.60	0.70	0.80	0.90	1.00
TR 006	HIGH	220	150			310	300	290	280	270	250	230	210	180					
	MEDIUM					260	250	240	230	210	200	190	150						
	LOW					210	200	190	180	160	150								
TR 009	HIGH	325	225			410	400	380	360	350	330	320	300	280					
	MEDIUM					390	370	360	340	320	310	290	280	260					
	LOW					340	330	322	310	300	280	260	250						
TR 012	HIGH	400	300			470	460	450	440	430	420	400	390	380	320				
	MEDIUM					420	410	400	390	380	370	360	350	340					
	LOW					360	360	350	340	320	320	310	300						
TR 015	HIGH	525	375			745	725	706	696	686	666	637	588	539	451				
	MEDIUM			686	676	666	657	647	637	617	608	588	549	510					
	LOW			608	598	588	578	568	559	549	529	510	480	451					
TR 018	HIGH	600	450			745	725	706	696	686	666	637	588	539	451				
	MEDIUM			686	676	666	657	647	637	617	608	588	549	510					
	LOW			608	598	588	578	568	559	549	529	510	480	451					
TR 024	HIGH	800	600									950	922	884	827	732	656		
	MEDIUM			960	950	941	931	912	893	874	855	836	817	789	732	665			
	LOW			779	770	760	751	741	732	722	713	694	684	665	618				
TR 030	HIGH	1000	750							1102	1074	1045	1017	979	903	798			
	MEDIUM			1188	1169	1140	1121	1093	1064	1036	1017	988	960	922	846				
	LOW			1064	1045	1017	998	979	960	931	912	884	855	827	751				
TR 036	HIGH	1200	900	1474	1455	1436	1416	1387	1358	1329	1310	1280	1232	1174	1077	931			
	MEDIUM			1174	1164	1106	1106	1096	1096	1086	1077	1067	1038	1009	912				
	LOW			980	980	970	970	960	960	951	951	941	922	902					
TR 042	HIGH	1350	1050	1558	1530	1501	1473	1444	1416	1378	1340	1302	1264	1226	1131				
	MEDIUM			1416	1397	1368	1349	1321	1302	1273	1245	1207	1169	1131	1064				
	LOW			1083	1083	1074	1074	1064	1055										
TR 048	HIGH	1600	1200					1881	1853	1815	1767	1710	1653	1596	1416	1216	1216		
	MEDIUM			1843	1824	1805	1786	1767	1729	1682	1653	1625	1577	1520	1340				
	LOW			1682	1663	1644	1625	1606	1587	1568	1530	1492	1435	1378	1264				
TR 060	HIGH	2000	1500	2195	2195	2185	2176	2156	2117	2078	2048	2019	1999	1970	1921	1842	1754	1627	
	MEDIUM			2009	2009	1999	1980	1950	1931	1901	1882	1852	1823	1793	1744	1676	1588		
	LOW			1813	1813	1803	1793	1774	1764	1744	1725	1695	1666	1637	1568				

Black areas denote ESP where operation is not recommended.
Units factory shipped on medium speed. Other speeds require field selection.
All airflow is rated and shown above at the lower voltage if unit is dual voltage rated, e.g. 208V for 208-230V units.
Only two speed fan (H & M) available on 575V units.
Performance stated is at the rated power supply, performance may vary as the power supply varies from the rated.

TR Blower Performance Data
High Static

Model	Fan Speed	Rated Airflow	Min CFM	Airflow (cfm) at External Static Pressure (in. wg)															
				0.00	0.05	0.10	0.15	0.20	0.25	0.30	0.35	0.40	0.45	0.50	0.60	0.70	0.80	0.90	1.00
TR 015	HS HI	525	375				774	764	755	745	735	715	696	676	637	519			
	HS MED			735	725	706	696	686	676	657	657	647	637	617	588	480			
	HS LOW			657	647	627	617	608	598	588	578	568	568	559	519				
TR 018	HS HI	600	450				774	764	755	745	735	715	696	676	637	519			
	HS MED			735	725	706	696	686	676	657	657	647	637	617	588	480			
	HS LOW			657	647	627	617	608	598	588	578	568	568	559	519				
TR 024	HS HI	800	600											979	903	798	665		
	HS MED											988	960	922	846	713			
	HS LOW							979	960	931	912	884	855	827	751	675			
TR 030	HS HI	1000	750											1102	988	874	760		
	HS MED											1074	1026	979	884	779			
	HS LOW			998	988	979	960	941	931	912	893	865	836	798					
TR 036	HS HI	1200	900									1484	1455	1426	1358	1251	1135	931	
	HS MED			1319	1310	1300	1290	1280	1271	1261	1242	1222	1213	1193	1116	1038			
	HS LOW			999	989	980	980	970	970	960	951	931	922	902					
TR 042	HS HI	1350	1050					1473	1463	1444	1425	1397	1387	1378	1311	1178			
	HS MED			1321	1311	1302	1292	1283	1273	1254	1245	1235	1216	1188	1121				
	HS LOW																		
TR 048	HS HI	1600	1200									1957	1938	1910	1862	1786	1701	1577	1435
	HS MED			1948	1948	1938	1919	1891	1872	1843	1824	1796	1767	1739	1691	1625	1539	1416	1254
	HS LOW			1758	1758	1748	1739	1720	1710	1691	1672	1644	1615	1587	1520	1435	1311		
TR 060	HS HI	2000	1500	2352	2352	2342	2332	2323	2313	2293	2274	2254	2225	2195	2156	2087	2019	1940	1852
	HS MED			2117	2117	2107	2107	2097	2068	2038	2019	1999	1989	1980	1940	1891	1842	1460	1715
	HS LOW			1891	1891	1882	1882	1872	1862	1852	1852	1842	1833	1813	1793	1764	1715	1666	1588

Black areas denote ESP where operation is not recommended.
Units factory shipped on medium speed. Other speeds require field selection.
All airflow is rated and shown above at the lower voltage if unit is dual voltage rated, e.g. 208V for 208-230V units.
Only two speed fan (H & M) available on 575V units.
Performance stated is at the rated power supply, performance may vary as the power supply varies from the rated.

ECM Blower Control

The ECM fan is controlled by an interface board that converts thermostat inputs and field selectable CFM settings to signals used by the ECM motor controller. Units manufactured before July 2005 have version I (P/N 69243707). Units manufactured after July 2005 have version II (P/N 17B0019N01). Fan speeds are selected with jumpers for version I or via a nine position DIP switch for version II. To take full advantage of the ECM motor features, a multi-stage thermostat should be used (2-stage heat/2-stage cool or 3-stage heat/2-stage cool).

Note: Power must be off to the unit for at least three seconds before the ECM motor will recognize a speed change. The motor will recognize a change in the CFM Adjust or dehumidification mode settings while the unit is powered.

There are four different airflow settings from lowest airflow rate (speed tap 1) to the highest airflow rate (speed tap 4).

The charts below indicate settings for both versions of the ECM interface board, followed by detailed information for each setting.

Cooling Settings: The cooling setting determines the cooling (normal) CFM for all units with ECM motor. Cooling (normal) setting is used when the unit is not in dehumidification mode. Tap 1 is the lowest CFM setting, while tap 4 is the highest CFM setting. To avoid air coil freeze-up, tap 1 may not be used if the dehumidification mode is selected. Consult submittal data or specifications catalog for the specific unit series and model to correlate speed tap setting to airflow in CFM.

Heating Settings: The heating setting determines the heating CFM. Tap 1 is the lowest CFM setting, while tap 4 is the highest CFM setting. Consult submittal data or specifications catalog for the specific unit series and model to correlate speed tap setting to airflow in CFM.

Auxiliary/Emergency Heat Settings: The auxiliary/emergency heat setting determines the CFM when the unit is in auxiliary heat or emergency heat mode. This setting is used for residential units with internal electric heat. When auxiliary electric heat is energized (i.e. compressor and electric heat), the greater of the auxiliary/emergency or heating setting will be used. A "G" (fan) signal must be present from the thermostat for electric heat to operate. Consult the submittal data or specifications catalog for the specific unit series and model to correlate speed tap setting to airflow in CFM.

CFM Adjust Settings: The CFM adjust setting allows four selections. The NORM setting is the factory default position. The + or – settings adjust the airflow by +/- 15%. The +/- settings are used to "fine tune" airflow adjustments. The TEST setting runs the ECM motor at 70% torque, which causes the motor to operate like a standard PSC motor, and disables the CFM counter.

Dehumidification Mode Settings: The dehumidification mode setting provides field selection of humidity control. When operating in the normal mode, the cooling airflow settings are determined by the cooling tap setting above. When dehumidification is enabled there is a reduction in airflow in cooling to increase the moisture removal of the heat pump. Consult submittal data or specifications catalog for the specific unit series and model to correlate speed tap to airflow in CFM. The dehumidification mode can be enabled in two ways.

1. **Constant Dehumidification Mode:** When the dehumidification mode is selected (via DIP switch or jumper setting), the ECM motor will operatewith a multiplier applied to the cooling CFM settings (approx. 20-25% lower airflow). Any time the unit is running in the cooling mode, it will operate at the lower airflow to improve latent capacity. The "DEHUM" LED will be illuminated at all times. Heating airflow is not affected **Note: Do not select dehumidification mode if cooling setting is tap 1.**
2. **Automatic (Humidistat-controlled) Dehumidification Mode:** When the dehumidification mode is selected (via DIP switch or jumper setting AND a humidistat is connected to terminal DH(version II) or HUM (version I), the cooling airflow will only be reduced when the humidistat senses that additional dehumidification is required. The DH (or HUM) terminal is reverse logic. Therefore, a humidistat (not dehumidistat) is required. The "DEHUM" LED will be illuminated only when the humidistat is calling for dehumidification mode. Heating airflow is not affected. **Note: Do not select dehumidification mode if cooling setting is tap 1.**

The ECM motor includes "soft start" and "ramp down" features. The soft start feature is a gentle increase of motor rpm at blower start up. This creates a much quieter blower start cycle.

The ramp down feature allows the blower to slowly decrease rpm to a full stop at the end of each blower cycle. This creates a much quieter end to each blower cycle and adds overall unit efficiency.

The ramp down feature may be eliminated during an ESD (Emergency Shut Down) situation when using a DXM unit controller. A DPDT relay is required to break the line voltage to the ECM motor during ESD. This relay can be wired as shown below to eliminate the ramp down (and operation) of the ECM blower motor.

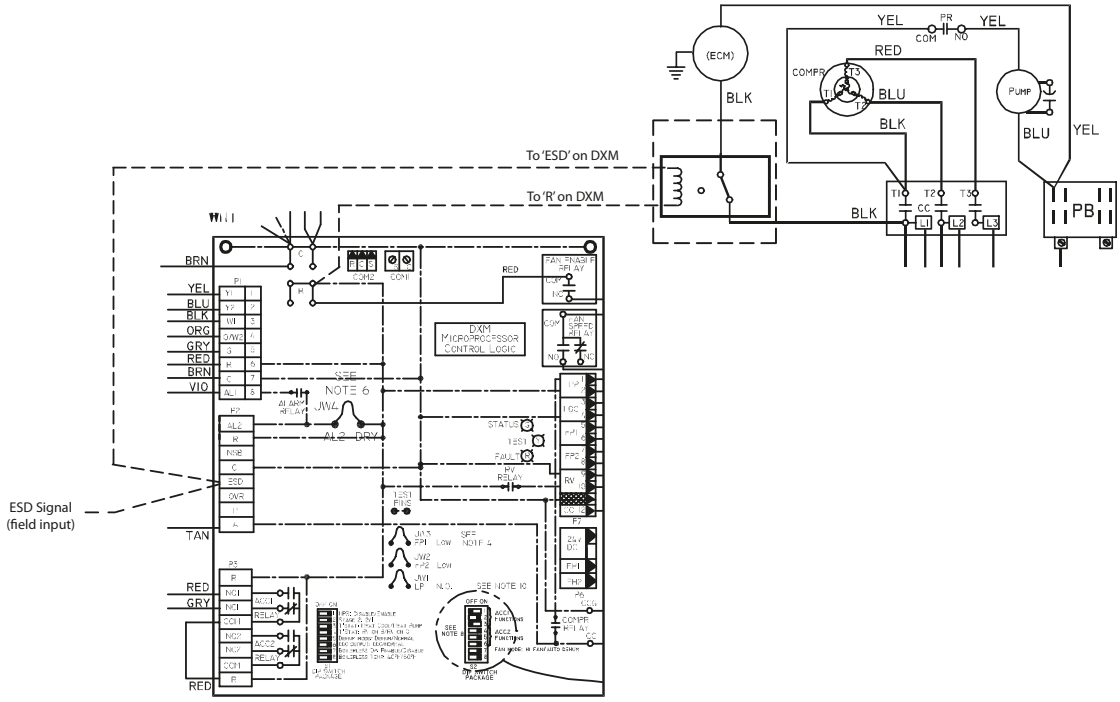

Table 5: ECM Board Tap Settings

Cooling settings

Tap Setting	Version II 17B0019N01 DIP Switch	
	SW1	SW2
1	ON	ON
2	ON	OFF
3	OFF	ON
4	OFF	OFF

Heating settings

Tap Setting	Version II 17B0019N01 DIP Switch	
	SW3	SW4
1	ON	ON
2	ON	OFF
3	OFF	ON
4	OFF	OFF

CFM Adjust settings

Tap Setting	Version II 17B0019N01 DIP Switch	
	SW7	SW8
TEST	ON	ON
-	ON	OFF
+	OFF	ON
NORM	OFF	OFF

Dehum Mode settings

Tap Setting	Version II 17B0019N01 DIP Switch
	SW9
NORM	ON
Dehumid	OFF

Aux/Emerg Heat settings

Tap Setting	Version II 17B0019N01 DIP Switch	
	SW5	SW6
1	ON	ON
2	ON	OFF
3	OFF	ON
4	OFF	OFF

Figure 26a: ECM Version II Interface Layout

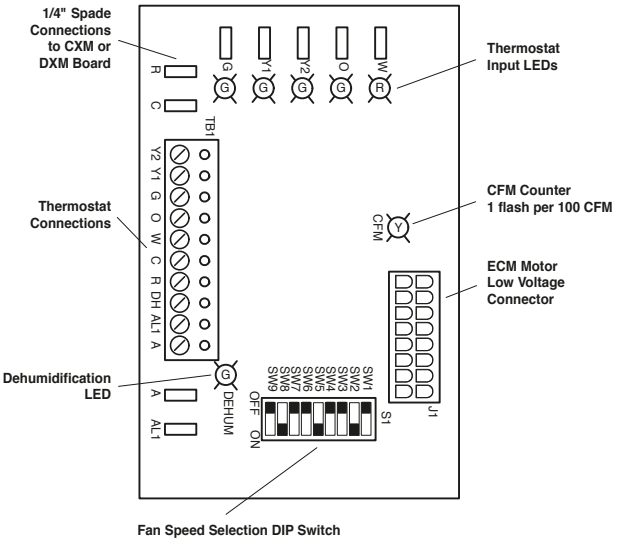

Packaged Units

Rev.: 03 January, 2011

Typical Wiring Diagram - Units with CXM Board and ECM Fan Motor (Single Phase)

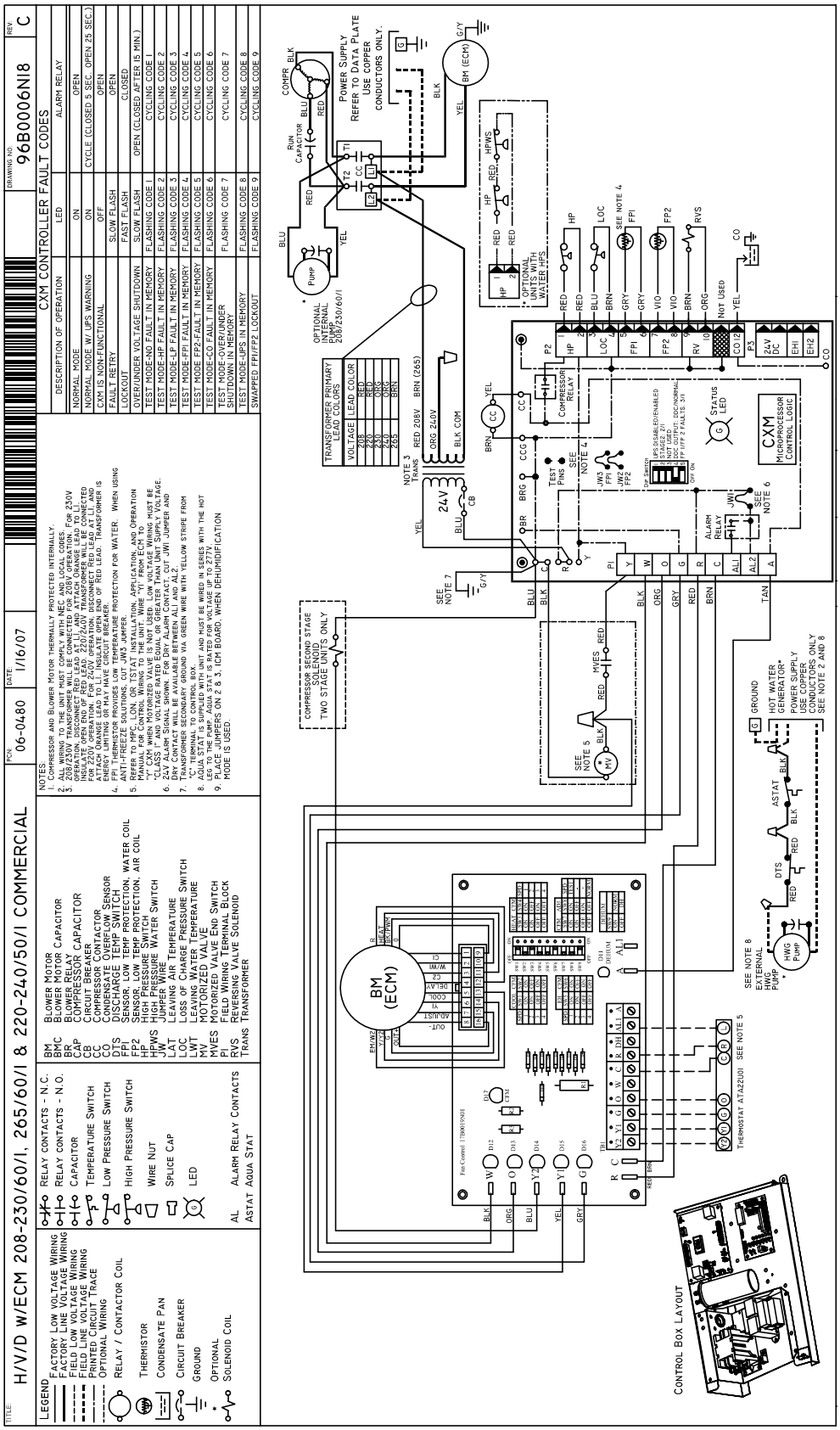

Typical Wiring Diagram - Units with CXM Board and PSC Fan Motor (Single Phase)

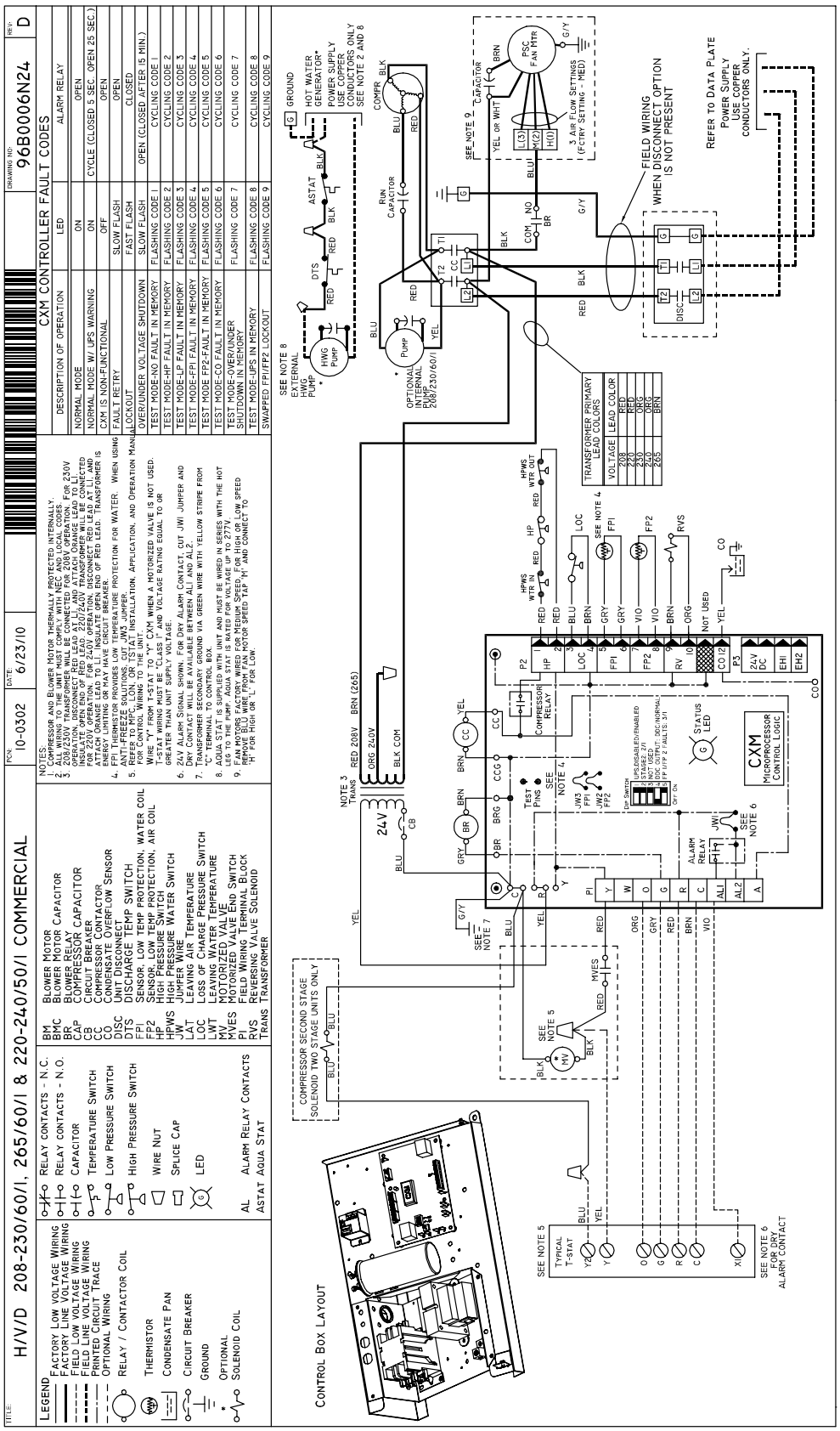

Typical Wiring Diagram - Units with DXM Board and PSC Fan Motor (Three Phase)

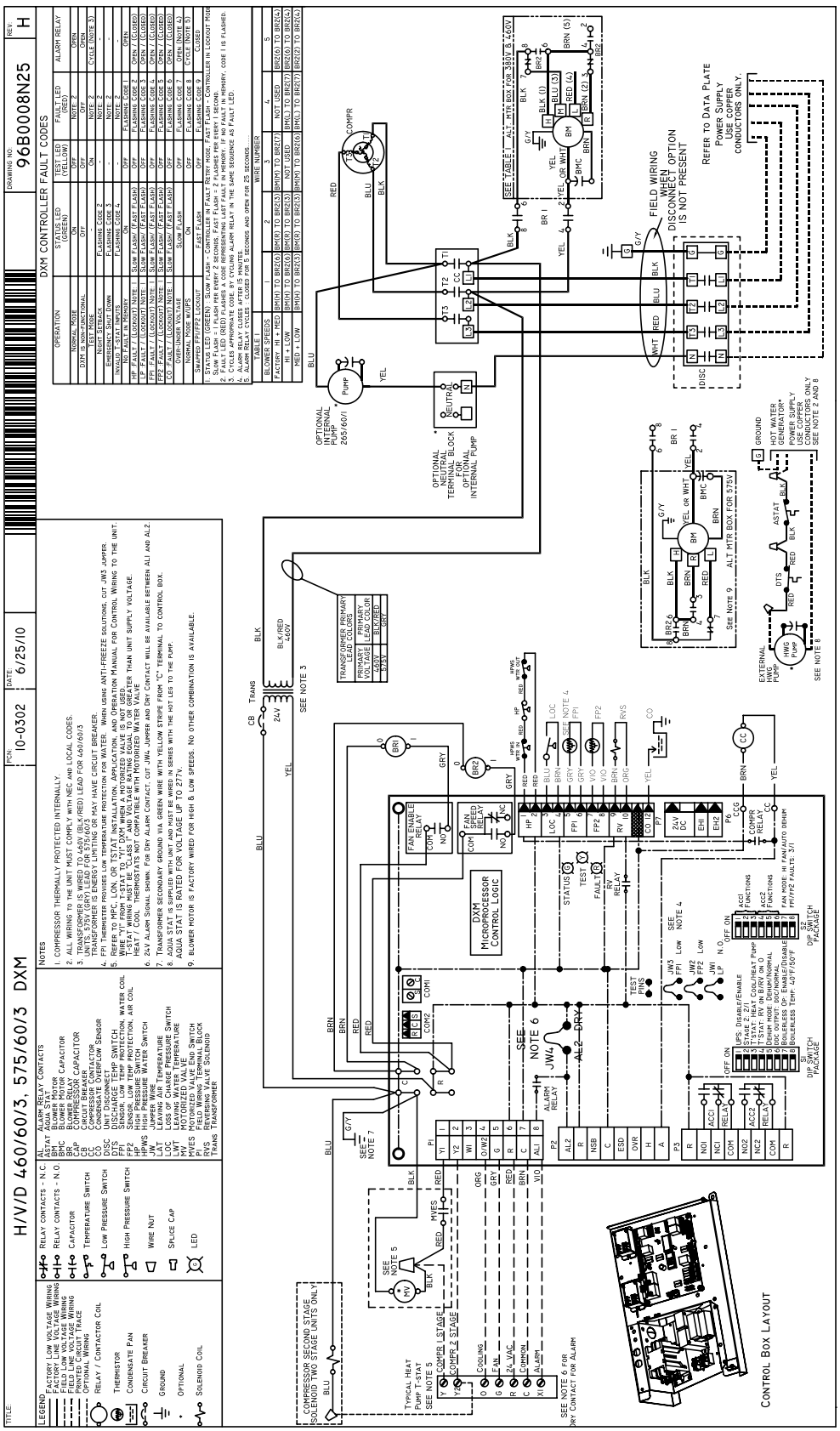

Typical Wiring Diagram - Units with CXM Board, ECM Fan Motor, and MPC (DDC) CONTROLS (SINGLE PHASE)

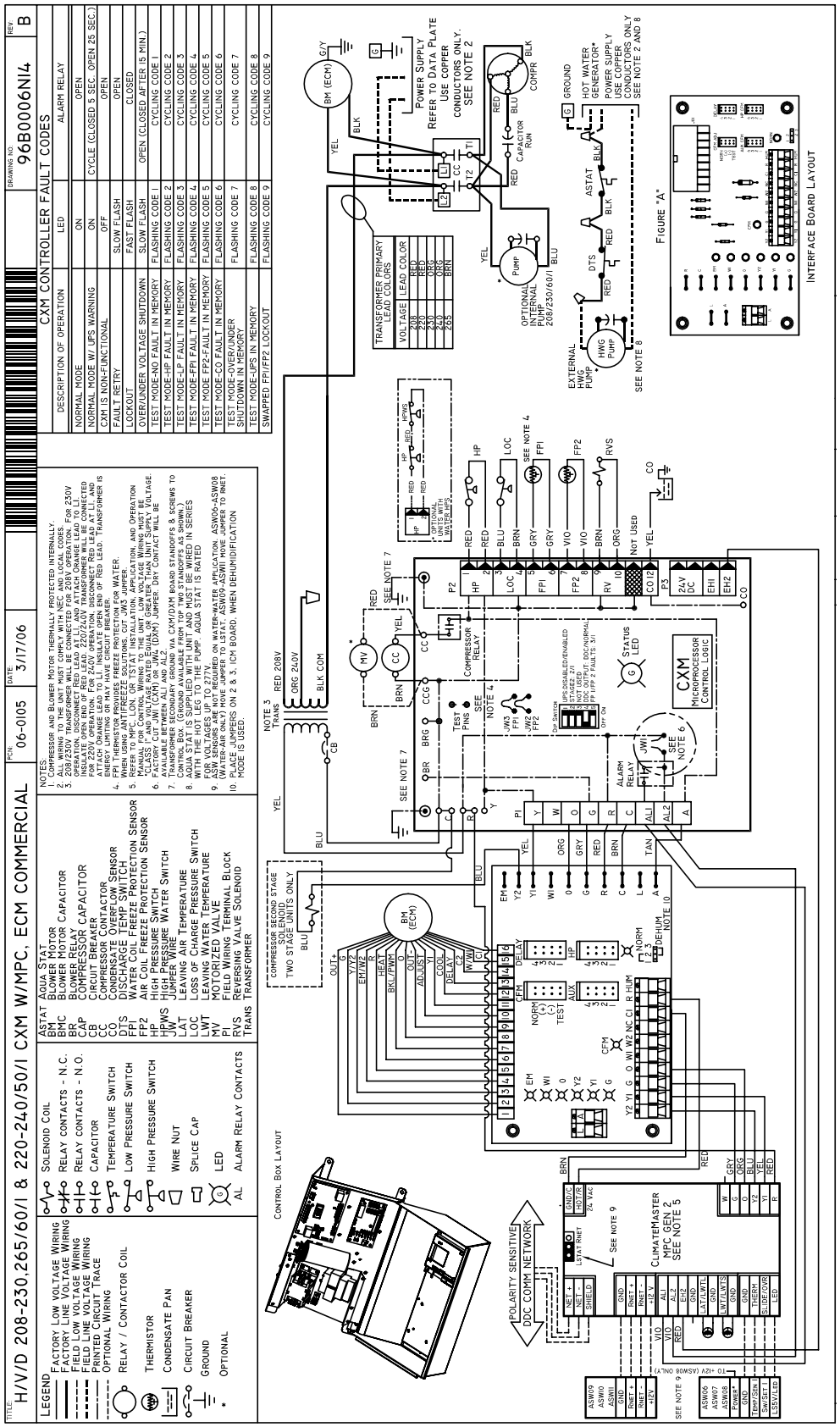

CXM Controls

CXM Control - For detailed control information, see CXM or DXM Application, Operation and Maintenance (AOM) manual (part # 97B0003N12 or part #97B0003N13).

Field Selectable Inputs - Test mode: Test mode allows the service technician to check the operation of the control in a timely manner. By momentarily shorting the test terminals, the CXM control enters a 20 minute test mode period in which all time delays are sped up 15 times. Upon entering test mode, the status LED will flash a code representing the last fault. For diagnostic ease at the thermostat, the alarm relay will also cycle during test mode. The alarm relay will cycle on and off similar to the status LED to indicate a code representing the last fault, at the thermostat. Test mode can be exited by shorting the test terminals for 3 seconds.
Retry Mode: If the control is attempting a retry of a fault, the status LED will slow flash (slow flash = one flash every 2 seconds) to indicate the control is in the process of retrying.

Field Configuration Options - Note: In the following field configuration options, jumper wires should be clipped ONLY when power is removed from the CXM control.

Water coil low temperature limit setting: Jumper 3 (JW3-FP1 Low Temp) provides field selection of temperature limit setting for FP1 of 30°F or 10°F [-1°F or -12°C] (refrigerant temperature).
Not Clipped = 30°F [-1°C]. Clipped = 10°F [-12°C].
Air coil low temperature limit setting: Jumper 2 (JW2-FP2 Low Temp) provides field selection of temperature limit setting for FP2 of 30°F or 10°F [-1°F or -12°C] (refrigerant temperature). **Note: This jumper should only be clipped under extenuating circumstances, as recommended by the factory.**
Not Clipped = 30°F [-1°C]. Clipped = 10°F [-12°C].
Alarm relay setting: Jumper 1 (JW1-AL2 Dry) provides field selection of the alarm relay terminal AL2 to be jumpered to 24VAC or to be a dry contact (no connection).
Not Clipped = AL2 connected to R. Clipped = AL2 dry contact (no connection).

DIP Switches - Note: In the following field configuration options, DIP switches should only be changed when power is removed from the CXM control.

DIP switch 1: Unit Performance Sentinel Disable **-** provides field selection to disable the UPS feature.
On = Enabled. Off = Disabled.

DIP switch 2: Stage 2 Selection - provides selection of whether compressor has an "on" delay. If set to stage 2, the compressor will have a 3 second delay before energizing. Also, if set for stage 2, the alarm relay will NOT cycle during test mode.
On = Stage 1. Off = Stage 2
DIP switch 3: Not Used.
DIP switch 4**:** DDC Output at EH2 - provides selection for DDC operation. If set to "DDC Output at EH2," the EH2 terminal will continuously output the last fault code of the controller. If set to "EH2 normal," EH2 will operate as standard electric heat output.
On = EH2 Normal. Off = DDC Output at EH2.
Note: Some CXM controls only have a 2 position DIP switch package. If this is the case, this option can be selected by clipping the jumper which is in position 4 of SW1.
Jumper not clipped = EH2 Normal. Jumper clipped = DDC Output at EH2.
DIP switch 5: Factory Setting - Normal position is "On." Do not change selection unless instructed to do so by the factory.

Table 6a: CXM/DXM LED And Alarm Relay Operations

Description of Operation	LED	Alarm Relay
Normal Mode	On	Open
Normal Mode with UPS Warning	On	Cycle (closed 5 sec., Open 25 sec.)
CXM is non-functional	Off	Open
Fault Retry	Slow Flash	Open
Lockout	Fast Flash	Closed
Over/Under Voltage Shutdown	Slow Flash	Open (Closed after 15 minutes)
Test Mode - No fault in memory	Flashing Code 1	Cycling Code 1
Test Mode - HP Fault in memory	Flashing Code 2	Cycling Code 2
Test Mode - LP Fault in memory	Flashing Code 3	Cycling Code 3
Test Mode - FP1 Fault in memory	Flashing Code 4	Cycling Code 4
Test Mode - FP2 Fault in memory	Flashing Code 5	Cycling Code 5
Test Mode - CO Fault in memory	Flashing Code 6	Cycling Code 6
Test Mode - Over/Under shutdown in memory	Flashing Code 7	Cycling Code 7
Test Mode - UPS in memory	Flashing Code 8	Cycling Code 8
Test Mode - Swapped Thermistor	Flashing Code 9	Cycling Code 9

-Slow Flash = 1 flash every 2 seconds
-Fast Flash = 2 flashes every 1 second
-Flash code 2 = 2 quick flashes, 10 second pause, 2 quick flashes, 10 second pause, etc.
-On pulse 1/3 second; off pulse 1/3 second

⚠ CAUTION! ⚠

CAUTION! Do not restart units without inspection and remedy of faulting condition. Equipment damage may occur.

DXM Controls

DXM Control - For detailed control information, see CXM AOM (part # 97B0003N12), DXM AOM (part #97B0003N13), Lon controller AOM (part #97B0013N01) or MPC AOM (part # 97B0031N01).

Table 6b: DXM LED And Alarm Relay Operations

Description of Operation	Status LED (green)	Test LED (yellow)	Fault LED (red)	Alarm Relay
Normal mode	On	-	Off	Open
Normal mode with UPS	On	-	Flashing Code 8	Cycle (closed 5 sec, open 25 sec)
DXM is non-functional	Off	Off	Off	Open
Fault Retry	Slow Flash	-	Flashing fault code	Open
Lockout	Fast Flash	-	Flashing fault code	Closed
Test Mode	-	On	-	-
Night Setback	Flashing Code 2	-	-	-
ESD	Flashing Code 3	-	-	-
Invalid T-stat Inputs	Flashing Code 4	-	-	-
HP Fault	Slow Flash	-	Flashing Code 2	Open
LP Fault	Slow Flash	-	Flashing Code 3	Open
FP1 Fault	Slow Flash	-	Flashing Code 4	Open
FP2 Fault	Slow Flash	-	Flashing Code 5	Open
CO Fault	Slow Flash	-	Flashing Code 6	Open
Over/Under Voltages	Slow Flash	-	Flashing Code 7	Open (closed after 15 minutes)

-Slow Flash = 1 flash every 2 seconds
-Fast Flash = 2 flashes every 1 second
-Flash code 2 = 2 quick flashes, 10 second pause, 2 quick flashes, 10 second pause, etc.
-On pulse 1/3 second; off pulse 1/3 second

Field Selectable Inputs - Test mode: Test mode allows the service technician to check the operation of the control in a timely manner. By momentarily shorting the test terminals, the DXM control enters a 20 minute test mode period in which all time delays are sped up 15 times. Upon entering test mode, the status LED will flash a code representing the last fault. For diagnostic ease at the thermostat, the alarm relay will also cycle during test mode. The alarm relay will cycle on and off similar to the status LED to indicate a code representing the last fault, at the thermostat. Test mode can be exited by shorting the test terminals for 3 seconds.

Retry mode: If the control is attempting a retry of a fault, the status LED will slow flash (slow flash = one flash every 2 seconds) to indicate the control is in the process of retrying.

Field Configuration Options - Note: In the following field configuration options, jumper wires should be clipped ONLY when power is removed from the DXM control.

Water coil low temperature limit setting: Jumper 3 (JW3-FP1 Low Temp) provides field selection of temperature limit setting for FP1 of 30°F or 10°F [-1°F or -12°C] (refrigerant temperature).
Not Clipped = 30°F [-1°C]. Clipped = 10°F [-12°C].
Air coil low temperature limit setting: Jumper 2 (JW2-FP2 Low Temp) provides field selection of temperature limit setting for FP2 of 30°F or 10°F [-1°F or -12°C] (refrigerant temperature).
Note: This jumper should only be clipped under extenuating circumstances, as recommended by ClimateMaster technical services.
Not Clipped = 30°F [-1°C]. Clipped = 10°F [-12°C].
Alarm relay setting: Jumper 4 (JW4-AL2 Dry) provides field selection of the alarm relay terminal AL2 to be jumpered to 24VAC or to be a dry contact (no connection).
Not Clipped = AL2 connected to R.
Clipped = AL2 dry contact (no connection).
Low pressure normally open: Jumper 1 (JW1-LP norm open) provides field selection for low pressure input to be normally closed or normally open.
Not Clipped = LP normally closed. Clipped = LP normally open.

DIP Switches - Note: In the following field configuration options, DIP switches should only be changed when power is removed from the DXM control.

DIP Package #1 (S1) - DIP Package #1 has 8 switches and provides the following setup selections:
1.1 - Unit Performance Sentinel (UPS) disable: DIP Switch 1.1 provides field selection to disable the UPS feature. On = Enabled. Off = Disabled.
1.2 - Compressor relay staging operation: DIP 1.2 provides selection of compressor relay staging operation. The compressor relay can be selected to turn on with a stage 1 or stage 2 call from the thermostat. This is used with dual stage units (2 compressors where 2 DXM controls are being used) or with master/slave applications. In master/slave applications, each compressor and fan will stage according to its appropriate DIP 1.2 setting. If set to stage 2, the compressor will have a 3 second on-delay before energizing during a Stage 2 demand. Also, if set for stage 2, the alarm relay will NOT cycle during test mode. On = Stage 1. Off = Stage 2.

1.3 - Thermostat type (heat pump or heat/cool): DIP 1.3 provides selection of thermostat type. Heat pump or heat/cool thermostats can be selected. When in heat/cool mode, Y1 is the input call for cooling stage 1; Y2 is the input call for cooling stage 2; W1 is the input call for heating stage 1; and O/W2 is the input call for heating stage 2. In heat pump mode, Y1 is the input call for compressor stage 1; Y2 is the input call for compressor stage 2; W1 is the input call for heating stage 3 or emergency heat; and O/W2 is the input call for reversing valve (heating or cooling, depending upon DIP 1.4).
On = Heat Pump. Off = Heat/Cool.
1.4 - Thermostat type (O/B): DIP 1.4 provides selection of thermostat type for reversing valve activation. Heat pump thermostats with "O" output (reversing valve energized for cooling) or "B" output (reversing valve energized for heating) can be selected with DIP 1.4.
On = HP stat with "O" output for cooling. Off = HP stat with "B" output for heating.
1.5 - Dehumidification mode: DIP 1.5 provides selection of normal or dehumidification fan mode. In dehumidification mode, the fan speed relay will remain off during cooling stage 2. In normal mode, the fan speed relay will turn on during cooling stage 2.
On = Normal fan mode. Off = Dehumidification mode.
1.6 - DDC output at EH2: DIP 1.6 provides selection for DDC operation. If set to "DDC Output at EH2," the EH2 terminal will continuously output the last fault code of the controller. If set to "EH2 normal," EH2 will operate as standard electric heat output.
On = EH2 Normal. Off = DDC Output at EH2.
1.7 - Boilerless operation: DIP 1.7 provides selection of boilerless operation. In boilerless mode, the compressor is only used for heating when FP1 is above the temperature specified by the setting of DIP 1.8. Below DIP 1.8 setting, the compressor is not used and the control goes into emergency heat mode, staging on EH1 and EH2 to provide heating.
On = normal. Off = Boilerless operation.
1.8 - Boilerless changeover temperature: DIP 1.8 provides selection of boilerless changeover temperature setpoint. Note that the FP1 thermistor is sensing refrigerant temperature between the coaxial heat exchanger and the expansion device (TXV or cap tube). Therefore, the 50°F [10°C] setting is not 50°F [10°C] water, but approximately 60°F [16°C] EWT.
On = 50°F [10°C]. Off = 40°F [16°C].

DIP Package #2 (S2) - DIP Package #2 has 8 switches and provides the following setup selections:
2.1 - Accessory1 relay personality: DIP 2.1 provides selection of ACC1 relay personality (relay operation/characteristics). See table 6c for description of functionality.
2.2 - Accessory1 relay personality: DIP 2.2 provides selection of ACC 1 relay personality (relay operation/characteristics). See table 6c for description of functionality.
2.3 - Accessory1 relay personality: DIP 2.3 provides selection of ACC 1 relay options. See table 6c for description of functionality.
2.4 - Accessory2 relay personality: DIP 2.4 provides selection of ACC 2 relay personality (relay operation/characteristics). See table 6c for description of functionality.
2.5 - Accessory2 relay personality: DIP 2.5 provides selection of ACC 2 relay personality (relay operation/characteristics). See table 6c for description of functionality.
2.6 - Accessory2 relay personality: DIP 2.6 provides selection of ACC 2 relay options. See table 6c for description of functionality.
2.7 - Auto dehumidification fan mode or high fan mode: DIP 2.7 provides selection of auto dehumidification fan mode or high fan mode. In auto dehumidification mode, the fan speed relay will remain off during cooling stage 2 IF the H input is active. In high fan mode, the fan enable and fan speed relays will turn on when the H input is active.
On = Auto dehumidification mode. Off = High fan mode.
2.8 - Special factory selection: DIP 2.8 provides special factory selection. Normal position is "On". Do not change selection unless instructed to do so by the factory.

Table 6c: Accessory DIP Switch Settings

DIP 2.1	DIP 2.2	DIP 2.3	ACC1 Relay Option
On	On	On	Cycle with fan
Off	On	On	Digital NSB
On	Off	On	Water Valve - slow opening
On	On	Off	OAD
Off	Off	Off	Reheat Option - Humidistat
Off	On	Off	Reheat Option - Dehumidistat
DIP 2.4	**DIP 2.5**	**DIP 2.6**	**ACC2 Relay Option**
On	On	On	Cycle with compressor
Off	On	On	Digital NSB
On	Off	On	Water Valve - slow opening
On	On	Off	OAD

All other DIP combinations are invalid

Safety Features
CXM and DXM Controls

Safety Features – CXM/DXM Control
The safety features below are provided to protect the compressor, heat exchangers, wiring, and other components from damage caused by operation outside of design conditions.

Anti-short cycle protection: The control features a 5 minute anti-short cycle protection for the compressor. **Note: The 5 minute anti-short cycle also occurs at power up.**
Random start: The control features a random start upon power up of 5-80 seconds.
Fault Retry: In Fault Retry mode, the Status LED begins slowly flashing to signal that the control is trying to recover from a fault input. The control will stage off the outputs and then "try again" to satisfy the thermostat input call. Once the thermostat input call is satisfied, the control will continue on as if no fault occurred. If 3 consecutive faults occur without satisfying the thermostat input call, the control will go into "lockout" mode. The last fault causing the lockout will be stored in memory and can be viewed at the "fault" LED (DXM board) or by going into test mode (CXM board). **Note: FP1/FP2 faults are factory set at only one try.**
Lockout: In lockout mode, the status LED will begin fast flashing. The compressor relay is turned off immediately. Lockout mode can be "soft" reset by turning off the thermostat (or satisfying the call). A "soft" reset keeps the fault in memory but resets the control. A "hard" reset (disconnecting power to the control) resets the control and erases fault memory.
Lockout with emergency heat: While in lockout mode, if W becomes active (CXM), emergency heat mode will occur. If DXM is configured for heat pump thermostat type (DIP 1.3), emergency heat will become active if O/W2 is energized.
High pressure switch: When the high pressure switch opens due to high refrigerant pressures, the compressor relay is de-energized immediately since the high pressure switch is in series with the compressor contactor coil. The high pressure fault recognition is immediate (does not delay for 30 continuous seconds before de-energizing the compressor).
High pressure lockout code = 2
Example: 2 quick flashes, 10 sec pause, 2 quick flashes, 10 sec. pause, etc.
Low pressure switch: The low pressure switch must be open and remain open for 30 continuous seconds during "on" cycle to be recognized as a low pressure fault. If the low pressure switch is open for 30 seconds prior to compressor power up it will be considered a low pressure (loss of charge) fault. The low pressure switch input is bypassed for the initial 120 seconds of a compressor run cycle.
Low pressure lockout code = 3
Water coil low temperature (FP1): The FP1 thermistor temperature must be below the selected low temperature limit setting for 30 continuous seconds during a compressor run cycle to be recognized as a FP1 fault. The FP1 input is bypassed for the initial 120 seconds of a compressor run cycle. FP1 is set at the factory for one try. Therefore, the control will go into lockout mode once the FP1 fault has occurred.
FP1 lockout code = 4
Air coil low temperature (FP2): The FP2 thermistor temperature must be below the selected low temperature limit setting for 30 continuous seconds during a compressor run cycle to be recognized as a FP2 fault. The FP2 input is bypassed for the initial 60 seconds of a compressor run cycle. FP2 is set at the factory for one try. Therefore, the control will go into lockout mode once the FP2 fault has occurred.
FP2 lockout code = 5
Condensate overflow: The condensate overflow sensor must sense overflow level for 30 continuous seconds to be recognized as a CO fault. Condensate overflow will be monitored at all times.
CO lockout code = 6
Over/under voltage shutdown: An over/under voltage condition exists when the control voltage is outside the range of 19VAC to 30VAC. Over/under voltage shut down is a self-resetting safety. If the voltage comes back within range for at least 0.5 seconds, normal operation is restored. This is not considered a fault or lockout. If the CXM/DXM is in over/under voltage shutdown for 15 minutes, the alarm relay will close.
Over/under voltage shut down code = 7
Unit Performance Sentinel-UPS (patent pending): The UPS feature indicates when the heat pump is operating inefficiently. A UPS condition exists when:

In heating mode with compressor energized, FP2 is greater than 125°F [52°C] for 30 continuous seconds, or:
In cooling mode with compressor energized, FP1 is greater than 125°F [52°C] for 30 continuous seconds, or:
In cooling mode with compressor energized, FP2 is less than 40°F [4.5°C] for 30 continuous seconds.

If a UPS condition occurs, the control will immediately go to UPS warning. The status LED will remain on as if the control is in normal mode. Outputs of the control, excluding LED and alarm relay, will NOT be affected by UPS. The UPS condition cannot occur during a compressor off cycle. During UPS warning, the alarm relay will cycle on and off. The cycle rate will be "on" for 5 seconds, "off" for 25 seconds, "on" for 5 seconds, "off" for 25 seconds, etc.

UPS warning code = 8

Swapped FP1/FP2 thermistors: During test mode, the control monitors to see if the FP1 and FP2 thermistors are in the appropriate places. If the control is in test mode, the control will lockout with code 9 after 30 seconds if:

The compressor is on in the cooling mode and the FP1 sensor is colder than the FP2 sensor, or:

The compressor is on in the heating mode and the FP2 sensor is colder than the FP1 sensor.

Swapped FP1/FP2 thermistor code = 9.

ESD (DXM only): The ESD (Emergency Shut Down) mode can be enabled from an external common signal to terminal ESD to shut down the unit. The green status light will flash code 3 when the unit is in ESD mode.

ESD mode = code 3 (green "status" LED)

Diagnostic Features

The LED on the CXM board advises the technician of the current status of the CXM control. The LED can display either the current CXM mode or the last fault in memory if in test mode. If there is no fault in memory, the LED will flash Code 1 (when in test mode).

The green status LED and red fault LED on the DXM board advise the technician of the current status of the DXM control. The status LED will indicate the current mode that the DXM control is in. The fault LED will ALWAYS flash a code representing the LAST fault in memory. If there is no fault in memory, the fault LED will flash Code 1. The yellow test LED will turn on when in test mode. **CAUTION: Do not restart units without inspection and remedy of faulting condition. Damage may occur.**

CXM/DXM Control Start-up Operation

The control will not operate until all inputs and safety controls are checked for normal conditions. The compressor will have a 5 minute anti-short cycle delay at power-up. The first time after power-up that there is a call for compressor, the compressor will follow a 5 to 80 second random start delay. After the random start delay and anti-short cycle delay, the compressor relay will be energized. On all subsequent compressor calls, the random start delay is omitted.

ClimaDry Modulating Reheat Option

ClimaDry Sequence Of Operation

A heat pump equipped with ClimaDry can operate in three modes, cooling, cooling with reheat, and heating. The cooling/heating modes are like any other ClimateMaster WSHP. The reversing valve ("O" signal) is energized in cooling, along with the compressor contactor(s) and blower relay. In the heating mode the reversing valve is de-energized. Almost any thermostat will activate the heat pump in heating or cooling modes. The DXM microprocessor board, which is standard with the ClimaDry option, will accept either heat pump (Y,O) thermostats or non-heat pump (Y,W) thermostats.

The reheat mode requires either a separate humidistat/dehumidistat or a thermostat that has an integrated dehumidification function for activation. The DXM board is configured to work with either a humidistat or dehumidistat input to terminal "H" (DIP switch settings for the DXM board are shown below in table 7). Upon receiving an "H" input, the DXM board will activate the cooling mode and engage reheat. Table 8 shows the relationship between thermostat input signals and unit operation.

There are four operational inputs for single stage units and six operational inputs for dual stage units:

-Fan Only
-1st Stage Cooling
-2nd Stage Cooling
-1st Stage Heating
-2nd Stage Heating
-Reheat Mode

- **Fan Only:** A (G) call from the thermostat to the (G terminal of the DXM control board will bring the unit on in fan only mode.
- **1st Stage Cooling:** A simultaneous call from (G), (Y1), and (O) to the (G), (Y1), (O/W2) terminals of the DXM control board will bring the unit on in 1st Stage Cooling.
- **2nd Stage Cooling:** A simultaneous call from (G), (Y1), (Y2), and (O) to the (G), (Y1), (Y2), and (O/W2) terminals of the DXM control board will bring the unit on in 2nd Stage Cooling. When the call is satisfied at the thermostat the unit will continue to run in 1st Stage Cooling until the 1st Stage Cooling call is removed or satisfied, shutting down the unit. **Note: Not all units have two-stage cooling functionality (e.g. GC series units).**
- **1st Stage Heating:** A simultaneous call from (G) and (Y1) to the (G) and (Y1) terminals of the DXM control board will bring the unit on in 1st Stage Heating.
- **2nd Stage Heating:** A simultaneous call from (G), (Y1), and (Y2) to the (G), (Y1), and (Y2) terminals of the DXM control board will bring the unit on in 2nd Stage Heating. When the call is satisfied at the thermostat the unit will continue to run in 1st Stage Heating until the call is removed or satisfied, shutting down the unit. NOTE: Not all units have two-stage heating functionality (e.g. GC series units).
- **Reheat Mode**: A call from the Humidistat/Dehumidistat to the (H) terminal of the DXM control board will bring the unit on in Reheat Mode if there is no call for cooling at the thermostat. When the Humidistat Dehumidification call is removed or satisfied the unit will shut down. Note: Cooling always overrides Reheat Mode. In the Cooling mode, the unit cools and dehumidifies. If the cooling thermostat is satisfied but there is still a call for dehumidification, the unit will continue to operate in Reheat Mode.

ClimaDry Component Functions

The ClimaDry option consists of the following components:

- Proportional Controller
- Supply Air Sensor
- Motorized Valve
- Loop Pump
- Hydronic Coil

The Proportional Controller operates on 24 VAC power supply and automatically adjusts the water valve based upon the Supply Air Sensor. The Supply Air Sensor senses supply air temperature at the blower inlet providing the input signal necessary for the proportional control to drive the motorized valve during the reheat mode of operation. The Motorized Valve is a proportional actuator/three-way valve combination used to divert the condenser water from the coax to the hydronic reheat coil during the reheat mode of operation. The proportional controller sends a signal to the motorized valve based on the supply air temperature of the supply air sensor.

The Loop Pump circulates condenser water through the hydronic reheat coil during the reheat mode of operation. In this application, the loop pump is only energized during the reheat mode of operation. The Hydronic Coil is utilized during the reheat mode of operation to reheat the air to the setpoint of the proportional controller. Condenser water is diverted by the motorized valve and pumped through the hydronic coil by the loop pump in proportion to the control setpoint. The amount of reheating is dependent on the setpoint and how far from setpoint the supply air temperature is. The factory setpoint is 70–75°F [21-24°C], generally considered "neutral" air.

ClimaDry Application Considerations - Unlike most hot gas reheat options, the ClimaDry option will operate over a wide range of EWTs. Special flow regulation (water regulating valve) is not required for low EWT conditions. However, below 55°F [13°C], supply air temperatures may not be maintained at 72°F [22°C] because the cooling capacity exceeds the reheat coil capacity at low water temperatures. Below 55°F [13°C], essentially all water is diverted to the reheat coil (no heat of rejection to the building loop). Although the ClimaDry option will work fine with low EWTs, overcooling of the space may result with well water systems or on rare occasions with ground loop (geothermal) systems **(Note: Extended range units are required for well water and ground loop systems).**

Since dehumidification is generally only required in cooling, most ground loop systems will not experience overcooling of the supply air temperature. If overcooling of the space is a concern (e.g. computer room well water application), auxiliary heating may be required to maintain space temperature when the unit is operating in the dehumidification mode.

Water-Source Heat Pumps with ClimaDry should not be used as make-up air units. These applications should use equipment specifically designed for makeup air.

Figure 27: ClimaDry Schematic

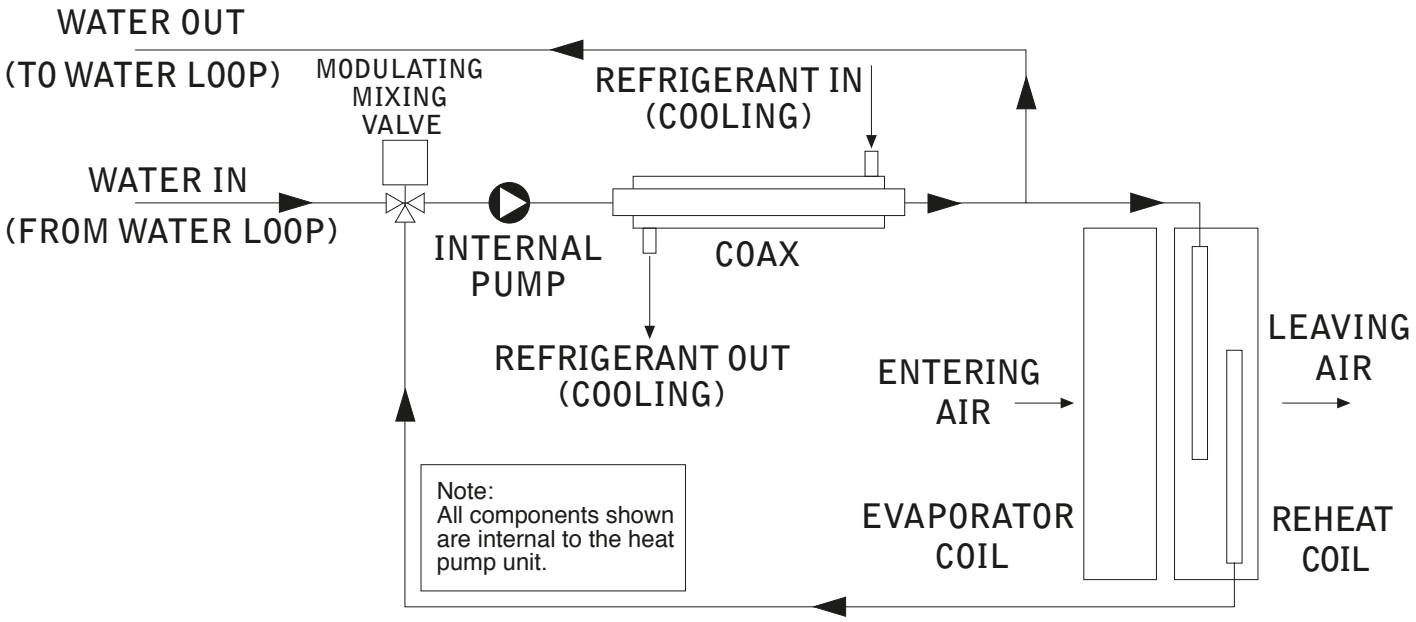

Table 7: Humidistat/Dehumidistat Logic & DXM (2.1, 2.2., 2.3) DIP Settings

Sensor	2.1	2.2	2.3	Logic	Reheat (ON) - H	Reheat (OFF) - H
Humidistat	OFF	OFF	OFF	Reverse	0 VAC	24 VAC
Dehumidistat	OFF	ON	OFF	Standard	24 VAC	0 VAC

Table 8: ClimaDry Operating Modes

Mode	Input					Output				
	O	G	Y1	Y2[3]	H	O	G	Y1	Y2[3]	Reheat
No Demand	ON/OFF	OFF	OFF	OFF	OFF	ON/OFF	OFF	OFF	OFF	OFF
Fan Only	ON/OFF	ON	OFF	OFF	OFF	ON/OFF	ON	OFF	OFF	OFF
Cooling 1st Stage	ON	ON	ON	OFF	OFF	ON	ON	ON	OFF	OFF
Cooling 2nd Stage	ON	ON	ON	ON	OFF	ON	ON	ON	ON	OFF
Cooling & Dehumidistat[1]	ON	ON	ON	ON/OFF	ON	ON	ON	ON	ON/OFF	OFF
Dehumidistat Only	ON/OFF	OFF	OFF	OFF	ON	ON	ON	ON	ON	ON
Heating 1st Stage	OFF	ON	ON	OFF	OFF	OFF	ON	ON	OFF	OFF
Heating 2nd Stage	OFF	ON	ON	ON	OFF	OFF	ON	ON	ON	OFF
Heating & Dehumidistat[2]	OFF	ON	ON	ON/OFF	ON	OFF	ON	ON	ON/OFF	OFF

[1]Cooling input takes priority over dehumidify input.
[2]DXM is programmed to ignore the H demand when the unit is in heating mode.
[3]N/A for single stage units; Full load operation for dual capacity units.
[4]ON/OFF = Either ON or OFF.

UNIT STARTING AND OPERATING CONDITIONS

Operating Limits

Environment – Units are designed for indoor installation only. Never install units in areas subject to freezing or where humidity levels could cause cabinet condensation (such as unconditioned spaces subject to 100% outside air).

Power Supply – A voltage variation of +/– 10% of nameplate utilization voltage is acceptable.

Determination of operating limits is dependent primarily upon three factors: 1) return air temperature. 2) water temperature, and 3) ambient temperature. When any one of these factors is at minimum or maximum levels, the other two factors should be at normal levels to ensure proper unit operation. Extreme variations in temperature and humidity and/or corrosive water or air will adversely affect unit performance, reliability, and service life. Consult Table 9a for operating limits.

Table 9a: Operating Limits

Operating Limits	TT		TS		TR/TC	
	Cooling	Heating	Cooling	Heating	Cooling	Heating
Air Limits						
Min. ambient air, DB	45ºF [7ºC]	39ºF [4ºC]	45ºF [7ºC]	39ºF [4ºC]	45ºF [7ºC]	39ºF [4ºC]
Rated ambient air, DB	80.6ºF [27ºC]	68ºF [20ºC]	80.6ºF [27ºC]	68ºF [20ºC]	80.6ºF [27ºC]	68ºF [20ºC]
Max. ambient air, DB	110ºF [43ºC]	85ºF [29ºC]	110ºF [43ºC]	85ºF [29ºC]	110ºF [43ºC]	85ºF [29ºC]
Min. entering air, DB/WB	60/45ºF [16/7ºC]	40ºF [4.4ºC]	60/50ºF [16/10ºC]	45ºF [7ºC]	65/50ºF [18/10ºC]	45ºF [7.2ºC]
Rated entering air, DB/WB	80.6/66.2ºF [27/19ºC]	68ºF [20ºC]	80.6/66.2ºF [27/19ºC]	68ºF [20ºC]	80.6/66.2ºF [27/19ºC]	68ºF [20ºC]
Max. entering air, DB/WB	100/75ºF [38/24ºC]	80ºF [27ºC]	95/75ºF [35/24ºC]	80ºF [27ºC]	95/75ºF [35/24ºC]	80ºF [27ºC]
Water Limits						
Min. entering water	30ºF [-1ºC]	20ºF [-6.7ºC]	30ºF [-1ºC]	20ºF [-6.7ºC]	30ºF [-1ºC]	20ºF [-6.7ºC]
Normal entering water	50-110ºF [10-43ºC]	30-70ºF [-1 to 21ºC]	50-110ºF [10-43ºC]	30-70ºF [-1 to 21ºC]	50-110ºF [10-43ºC]	30-70ºF [-1 to 21ºC]
Max. entering water	120ºF [49ºC]	90ºF [32ºC]	120ºF [49ºC]	90ºF [32ºC]	120ºF [49ºC]	90ºF [32ºC]
Normal Water Flow	1.5 to 3.0 gpm / ton [1.6 to 3.2 l/m per kW]		1.5 to 3.0 gpm / ton [1.6 to 3.2 l/m per kW]		1.5 to 3.0 gpm / ton [1.6 to 3.2 l/m per kW]	

*If with active ClimaDry 70/61ºF (21/16ºC)

Unit Starting and Operating Conditions

Commissioning Conditions

Consult Table 9b for the particular model. Starting conditions vary depending upon model and are based upon the following notes:

Notes:

1. Conditions in Table 9b are not normal or continuous operating conditions. Minimum/maximum limits are start-up conditions to bring the building space up to occupancy temperatures. Units are not designed to operate under these conditions on a regular basis.
2. Voltage utilization range complies with AHRI Standard 110.

Table 9b: Starting Limits

Commissioning Limits	Cooling	Heating
Air Limits		
Min. ambient air, DB	45ºF [7ºC]	39ºF [4ºC]
Rated ambient air, DB	80.6ºF [27ºC]	68ºF [20ºC]
Max. ambient air, DB	110ºF [43ºC]	85ºF [29ºC]
Min. entering air, DB/WB	*50/45ºF [10/7ºC]	40ºF [4.5ºC]
Rated entering air, DB/WB	80.6/66.2ºF [27/19ºC]	68ºF [20ºC]
Max. entering air, DB/WB	110/83ºF [43/28ºC]	80ºF [27ºC]
Water Limits		
Min. entering water	30ºF [-1ºC]	20ºF [-6.7ºC]
Normal entering water	50-110ºF [10-43ºC]	30-70ºF [-1 to 21ºC]
Max. entering water	120ºF [49ºC]	90ºF [32ºC]
Normal Water Flow	1.5 to 3.0 gpm / ton [1.6 to 3.2 l/m per kW]	

*If with active ClimaDry 70/61ºF (21/16ºC)

Piping System Cleaning and Flushing

Piping System Cleaning and Flushing - Cleaning and flushing the WLHP piping system is the single most important step to ensure proper start-up and continued efficient operation of the system.

Follow the instructions below to properly clean and flush the system:

1. Ensure that electrical power to the unit is disconnected.
2. Install the system with the supply hose connected directly to the return riser valve. Use a single length of flexible hose.
3. Open all air vents. Fill the system with water. DO NOT allow system to overflow. Bleed all air from the system. Pressurize and check the system for leaks and repair as appropriate. ClimaDry-equipped units have a manual air bleed valve at the top of the reheat coil. This valve must be used to bleed the air from the reheat coil after filling the system, for ClimaDry to operate properly.
4. Verify that all strainers are in place (ClimateMaster recommends a strainer with a #20 stainless steel wire mesh). Start the pumps, and systematically check each vent to ensure that all air is bled from the system.
5. Verify that make-up water is available. Adjust make-up water as required to replace the air which was bled from the system. Check and adjust the water/air level in the expansion tank.
6. Set the boiler to raise the loop temperature to approximately 86°F [30°C]. Open a drain at the lowest point in the system. Adjust the make-up water replacement rate to equal the rate of bleed.
7. Refill the system and add trisodium phosphate in a proportion of approximately 150 gallons [1/2 kg per 750 l] of water (or other equivalent approved cleaning agent). Reset the boiler to raise the loop temperature to 100°F [38°C]. Circulate the solution for a minimum of 8 to 24 hours. At the end of this period, shut off the circulating pump and drain the solution. Repeat system cleaning if desired.
8. When the cleaning process is complete, remove the short-circuited hoses. Reconnect the hoses to the proper supply, and return the connections to each of the units. Refill the system and bleed off all air.
9. Test the system pH with litmus paper. The system water should be in the range of pH 6.0 - 8.5 (see table 3). Add chemicals, as appropriate to maintain neutral pH levels.
10. When the system is successfully cleaned, flushed, refilled and bled, check the main system panels, safety cutouts and alarms. Set the controls to properly maintain loop temperatures.

DO NOT use "Stop Leak" or similar chemical agent in this system. Addition of chemicals of this type to the loop water will foul the heat exchanger and inhibit unit operation.

Note: The manufacturer strongly recommends all piping connections, both internal and external to the unit, be pressure tested by an appropriate method prior to any finishing of the interior space or before access to all connections is limited. Test pressure may not exceed the maximum allowable pressure for the unit and all components within the water system. The manufacturer will not be responsible or liable for damages from water leaks due to inadequate or lack of a pressurized leak test, or damages caused by exceeding the maximum pressure rating during installation.

Unit and System Checkout

⚠ CAUTION! ⚠

CAUTION! Do not use PVC piping. Temperatures will exceed 113°F, 45°C.

Unit and System Checkout
BEFORE POWERING SYSTEM, please check the following:

UNIT CHECKOUT

- ❑ Balancing/shutoff valves: Ensure that all isolation valves are open and water control valves are wired.
- ❑ Line voltage and wiring: Verify that voltage is within an acceptable range for the unit and wiring and fuses/breakers are properly sized. Verify that low voltage wiring is complete.
- ❑ Unit control transformer: Ensure that transformer has the properly selected voltage tap.
- ❑ Entering water and air: Ensure that entering water and air temperatures are within operating limits of Table 7.
- ❑ Low water temperature cutout: Verify that low water temperature cut-out on the CXM/DXM control is properly set.
- ❑ Unit fan: Manually rotate fan to verify free rotation and ensure that blower wheel is secured to the motor shaft. Be sure to remove any shipping supports if needed. DO NOT oil motors upon start-up. Fan motors are pre-oiled at the factory. Check unit fan speed selection and compare to design requirements.
- ❑ Condensate line: Verify that condensate line is open and properly pitched toward drain.
- ❑ Water flow balancing: Record inlet and outlet water temperatures for each heat pump upon startup. This check can eliminate nuisance trip outs and high velocity water flow that could erode heat exchangers.
- ❑ Unit air coil and filters: Ensure that filter is clean and accessible. Clean air coil of all manufacturing oils.
- ❑ Unit controls: Verify that CXM or DXM field selection options are properly set.

SYSTEM CHECKOUT

- ❑ System water temperature: Check water temperature for proper range and also verify heating and cooling set points for proper operation.
- ❑ System pH: Check and adjust water pH if necessary to maintain a level between 6 and 8.5. Proper pH promotes longevity of hoses and fittings (see table 3).
- ❑ System flushing: Verify that all hoses are connected end to end when flushing to ensure that debris bypasses the unit heat exchanger, water valves and other components. Water used in the system must be potable quality initially and clean of dirt, piping slag, and strong chemical cleaning agents. Verify that all air is purged from the system. Air in the system can cause poor operation or system corrosion.
- ❑ Cooling tower/boiler: Check equipment for proper setpoints and operation.
- ❑ Standby pumps: Verify that the standby pump is properly installed and in operating condition.
- ❑ System controls: Verify that system controls function and operate in the proper sequence.
- ❑ Low water temperature cutout: Verify that low water temperature cut-out controls are provided for the outdoor portion of the loop. Otherwise, operating problems may occur.
- ❑ System control center: Verify that the control center and alarm panel have appropriate setpoints and are operating as designed.
- ❑ Miscellaneous: Note any questionable aspects of the installation.

⚠ CAUTION! ⚠

CAUTION! Verify that ALL water control valves are open and allow water flow prior to engaging the compressor. Freezing of the coax or water lines can permanently damage the heat pump.

⚠ CAUTION! ⚠

CAUTION! To avoid equipment damage, DO NOT leave system filled in a building without heat during the winter unless antifreeze is added to the water loop. Heat exchangers never fully drain by themselves and will freeze unless winterized with antifreeze.

NOTICE! Failure to remove shipping brackets from spring-mounted compressors will cause excessive noise, and could cause component failure due to added vibration.

Unit Start-Up Procedure

Unit Start-up Procedure

1. Turn the thermostat fan position to "ON". Blower should start.
2. Balance air flow at registers.
3. Adjust all valves to their full open positions. Turn on the line power to all heat pumps.
4. Room temperature should be within the minimum-maximum ranges of table 9. During start-up checks, loop water temperature entering the heat pump should be between 60°F [16°C] and 95°F [35°C].
5. Two factors determine the operating limits of ClimateMaster heat pumps, (a) return air temperature, and (b) water temperature. When any one of these factors is at a minimum or maximum level, the other factor must be at normal level to ensure proper unit operation.
   a. Adjust the unit thermostat to the warmest setting. Place the thermostat mode switch in the "COOL" position. Slowly reduce thermostat setting until the compressor activates.
   b. Check for cool air delivery at the unit grille within a few minutes after the unit has begun to operate. **Note: Units have a five minute time delay in the control circuit that can be eliminated on the CXM/DXM control board as shown below in Figure 28. See controls description for details.**
   c. Verify that the compressor is on and that the water flow rate is correct by measuring pressure drop through the heat exchanger using the P/T plugs and comparing to tables 10a through 10e.
   d. Check the elevation and cleanliness of the condensate lines. Dripping may be a sign of a blocked line. Check that the condensate trap is filled to provide a water seal.
   e. Refer to table 17. Check the temperature of both entering and leaving water. If temperature is within range, proceed with the test. Verify correct water flow by comparing unit pressure drop across the heat exchanger versus the data in tables 10a through 10e. Heat of rejection (HR) can be calculated and compared to submittal data capacity pages. The formula for HR for systems with water is as follows:
      HR (Btuh) = TD x GPM x 500,where TD is the temperature difference between the entering and leaving water, and GPM is the flow rate in U.S. GPM, determined by comparing the pressure drop across the heat exchanger to tables 8a through 8e. In S-I units, the formula is as follows: HR (kW) = TD x l/s x 4.18.
   f. Check air temperature drop across the air coil when compressor is operating. Air temperature drop should be between 15°F and 25°F [8°C and 14°C].
   g. Turn thermostat to "OFF" position. A hissing noise indicates proper functioning of the reversing valve.
6. Allow five (5) minutes between tests for pressure to equalize before beginning heating test.
   a. Adjust the thermostat to the lowest setting. Place the thermostat mode switch in the "HEAT" position.
   b. Slowly raise the thermostat to a higher temperature until the compressor activates.
   c. Check for warm air delivery within a few minutes after the unit has begun to operate.
   d. Refer to table 17. Check the temperature of both entering and leaving water. If temperature is within range, proceed with the test. If temperature is outside of the operating range, check refrigerant pressures and compare to tables 11 through 16. Verify correct water flow by comparing unit pressure drop across the heat exchanger versus the data in tables 10a through 10e. Heat of extraction (HE) can be calculated and compared to submittal data capacity pages. The formula for HE for systems with water is as follows:
      HE (kW) = TD xGPM x 500, where TD is the temperature difference between the entering and leaving water, and l/s is the flow rate in U.S. GPM, determined by comparing the pressure drop across the heat exchanger to tables 10a through 10e. In S-I units, the formula is as follows: HE (kW) = TD x l/s x 4.18.
   e. Check air temperature rise across the air coil when compressor is operating. Air temperature rise should be between 20°F and 30°F [11°C and 17°C].
   f. Check for vibration, noise, and water leaks.
7. If unit fails to operate, perform troubleshooting analysis (see troubleshooting section). If the check described fails to reveal the problem and the unit still does not operate, contact a trained service technician to ensure proper diagnosis and repair of the equipment.
8. When testing is complete, set system to maintain desired comfort level.
9. BE CERTAIN TO FILL OUT AND FORWARD ALL WARRANTY REGISTRATION PAPERS TO CLIMATEMASTER.

Note: If performance during any mode appears abnormal, refer to the CXM/DXM section or troubleshooting section of this manual. To obtain maximum performance, the air coil should be cleaned before start-up. A 10% solution of dishwasher detergent and water is recommended.

Figure 28: Test Mode Pins

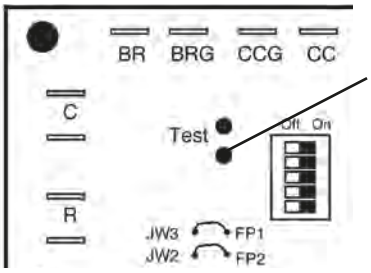

Short test pins together to enter Test Mode and speed-up timing and delays for 20 minutes.

⚠ WARNING! ⚠

WARNING! When the disconnect switch is closed, high voltage is present in some areas of the electrical panel. Exercise caution when working with energized equipment.

⚠ CAUTION! ⚠

CAUTION! Verify that ALL water control valves are open and allow water flow prior to engaging the compressor. Freezing of the coax or water lines can permanently damage the heat pump.

UNIT OPERATING CONDITIONS

Table 10a: TT Coax Water Pressure Drop

Model	U.S. GPM	l/s	l/m	Pressure Drop, psi [kPa]*			
				30°F [-1°C]	50°F [10°C]	70°F [21°C]	90°F [32°C]
TT 026	4.0	0.252	15	1.5 [10.3]	1.3 [9.0]	1.1 [7.6]	1.0 [6.9]
	6.0	0.378	23	3.1 [21.4]	2.6 [17.9]	2.3 [15.9]	2.1 [14.5]
	7.0	0.441	26	4.1 [28.3]	3.4 [23.4]	3.0 [20.7]	2.7 [18.6]
	8.0	0.504	30	5.1 [35.2]	4.3 [29.7]	3.8 [26.2]	3.4 [23.4]
TT 038	4.0	0.252	15	1.2 [8.3]	1.0 [6.9]	0.8 [5.5]	0.6 [4.1]
	6.0	0.378	23	2.6 [17.9]	2.5 [17.2]	2.3 [15.9]	2.1 [14.5]
	8.0	0.504	30	4.5 [31.0]	4.2 [29.0]	4.0 [27.6]	3.7 [25.5]
	9.0	0.567	34	5.7 [39.3]	5.2 [35.9]	4.8 [33.1]	4.4 [30.3]
TT 049	5.5	0.347	21	1.1 [7.6]	0.9 [6.2]	0.8 [5.5]	0.7 [4.8]
	8.3	0.523	31	2.2 [15.2]	2.1 [14.5]	2.0 [13.8]	1.8 [12.4]
	11.0	0.693	42	3.9 [26.9]	3.6 [24.8]	3.2 [22.1]	3.1 [21.4]
	12.0	0.756	45	4.5 [31.0]	4.2 [29.0]	3.8 [26.2]	3.5 [24.1]
TT 064	7.0	0.441	26	0.5 [3.4]	0.3 [2.1]	0.2 [1.4]	0.1 [0.7]
	10.5	0.662	40	1.9 [13.1]	1.8 [12.4]	1.7 [11.7]	1.6 [11.0]
	14.0	0.882	53	3.9 [26.9]	3.5 [24.1]	3.2 [22.1]	2.9 [20.0]
	15.0	0.945	57	4.8 [33.1]	4.3 [29.7]	3.9 [26.9]	3.5 [24.1]
TT 072	7.5	0.473	29	1.7 [11.7]	1.5 [10.3]	1.3 [9.0]	1.3 [9.0]
	11.3	0.712	43	3.9 [26.9]	3.4 [23.4]	3.0 [20.7]	2.8 [19.3]
	15.0	0.945	57	6.9 [47.6]	6.0 [41.4]	5.4 [37.2]	5.0 [34.5]
	17.0	1.071	64	8.9 [61.4]	7.7 [53.1]	6.9 [47.6]	6.5 [44.8]

*Note: To convert kPa to millibars, multiply by 10.

Table 10b: TS Coax Water Pressure Drop

Model	U.S. GPM	l/s	l/m	Pressure Drop, psi [kPa]*			
				30°F [-1°C]	50°F [10°C]	70°F [21°C]	90°F [32°C]
TS 006	1	0.063	4	0.3 [2.1]	0.3 [2.1]	0.2 [1.4]	0.2 [1.4]
	1.5	0.095	6	1.6 [11.0]	1.4 [11.0]	1.2 [11.0]	1.0 [11.0]
	2	0.126	8	3.0 [20.7]	2.6 [17.9]	2.2 [15.2]	1.8 [12.4]
TS 006	1.4	0.088	5	0.8 [5.5]	0.7 [4.8]	0.6 [4.1]	0.6 [4.1]
	2.1	0.132	8	1.5 [10.3]	1.4 [9.7]	1.2 [8.3]	1.1 [7.6]
	2.8	0.177	11	2.7 [18.6]	2.4 [16.5]	2.2 [15.2]	1.9 [13.1]
TS 012	1.8	0.114	7	0.6 [4.1]	0.5 [3.4]	0.4 [2.8]	0.3 [2.1]
	2.6	0.164	10	2.1 [14.5]	1.9 [13.1]	1.6 [11.0]	1.4 [9.7]
	3.5	0.221	13	3.8 [26.2]	3.4 [23.4]	3.0 [20.7]	2.6 [17.9]
TS 018	2.8	0.176	11	0.7 [4.8]	0.5 [3.4]	0.3 [2.1]	0.2[1.4]
	4.1	0.258	15	2.1 [14.5]	1.7 [11.7]	1.4 [9.7]	1.1 [7.6]
	5.5	0.347	21	3.5 [24.1]	2.8 [19.3]	2.4 [16.6]	2.0 [13.8]
TS 024	4.0	0.252	15	1.5 [10.3]	1.3 [9.0]	1.1 [7.6]	1.0 [6.9]
	6.0	0.378	23	3.1 [21.4]	2.6 [17.9]	2.3 [15.9]	2.1 [14.5]
	8.0	0.504	30	5.1 [35.2]	4.3 [29.7]	3.8 [26.2]	3.4 [23.4]
TS 030	4.0	0.252	15	1.5 [10.3]	1.3 [9.0]	1.1 [7.6]	1.0 [6.9]
	6.0	0.378	23	3.1 [21.4]	2.6 [17.9]	2.3 [15.9]	2.1 [14.5]
	8.0	0.504	30	5.1 [35.2]	4.3 [29.7]	3.8 [26.2]	3.4 [23.4]
TS 036	4.5	0.284	17	1.7 [11.7]	1.3 [9.0]	1.1 [7.6]	0.9 [6.2]
	6.8	0.428	26	3.3 [22.8]	3.1 [21.4]	2.9 [20.0]	2.6 [17.9]
	9.0	0.567	34	5.7 [39.3]	5.2 [35.9]	4.8 [33.1]	4.4 [30.3]
TS 042	5.5	0.347	21	1.1 [7.6]	0.9 [6.2]	0.8 [5.5]	0.7 [4.8]
	8.3	0.523	31	2.2 [15.2]	2.1 [14.5]	2.0 [13.8]	1.8 [12.4]
	11.0	0.693	42	3.9 [26.9]	3.6 [24.8]	3.2 [22.1]	3.1 [21.4]
TS 048	6.0	0.378	23	1.3 [9.0]	1.1 [7.6]	1.0 [6.9]	0.9 [6.2]
	9.0	0.567	34	2.6 [17.9]	2.5 [17.2]	2.3 [15.9]	2.2 [15.2]
	12.0	0.756	45	4.5 [31.0]	4.2 [29.0]	3.8 [26.2]	3.5 [24.1]
TS 060	7.5	0.473	28	0.6 [4.1]	0.4 [2.8]	0.3 [2.1]	0.2 [1.4]
	11.3	0.712	43	2.3 [15.9]	2.1 [14.5]	2.0 [13.8]	1.8 [12.4]
	15.0	0.945	57	4.8 [33.1]	4.3 [29.7]	3.9 [26.9]	3.5 [24.1]
TS 070	8.3	0.523	31	2.4 [16.6]	2.0 [13.8]	1.7 [11.7]	1.6 [11.0]
	12.4	0.781	47	5.2 [35.9]	4.5 [31.0]	4.0 [27.6]	3.8 [26.2]
	16.5	1.040	62	8.0 [55.2]	7.0 [48.3]	6.3 [43.4]	6.0 [41.4]

*Note: To convert kPa to millibars, multiply by 10.

Table 10c: TC Coax Water Pressure Drop

Model	U.S. GPM	l/s	Pressure Drop, psi [kPa]*			
			30°F [-1°C]	50°F [10°C]	70°F [21°C]	90°F [32°C]
006	0.75	0.05	0.5 [3.7]	0.3 [2.3]	0.2 [1.6]	0.2 [1.6]
	1.1	0.07	0.8 [5.3]	0.5 [3.5]	0.4 [2.7]	0.3 [2.2]
	1.5	0.09	1.3 [8.8]	0.9 [6.1]	0.7 [4.8]	0.6 [4.0]
009	1.1	0.07	1.3 [9.0]	0.6 [4.4]	0.4 [2.8]	0.3 [1.9]
	1.8	0.11	2.1 [14.1]	1.4 [9.4]	1.1 [7.4]	0.9 [6.2]
	2.3	0.14	3.5 [24.3]	2.6 [17.9]	2.1 [14.7]	1.8 [12.7]
012	1.5	0.09	1.9 [12.8]	1.1 [7.6]	0.8 [5.3]	0.6 [4.1]
	2.3	0.15	3.6 [25.0]	2.6 [17.8]	2.1 [14.3]	1.8 [12.1]
	3.0	0.19	6.7 [46.1]	5.0 [34.3]	4.1 [28.3]	3.6 [24.5]
015	1.9	0.12	1.0 [6.9]	0.6 [4.4]	0.5 [3.4]	0.4 [2.8]
	2.8	0.18	1.8 [12.4]	1.4 [9.3]	1.1 [7.6]	1.0 [6.9]
	3.8	0.24	3.3 [22.7]	2.5 [17.5]	2.1 [14.7]	1.9 [13.1]
018	2.3	0.14	2.1 [14.5]	1.4 [9.9]	1.1 [7.6]	0.9 [6.2]
	3.4	0.21	3.4 [23.4]	2.6 [17.6]	2.1 [14.7]	1.8 [12.4]
	4.5	0.28	5.9 [40.6]	4.6 [31.5]	3.9 [26.9]	3.4 [23.4]
024	3.0	0.19	2.2 [15.2]	1.7 [11.6]	1.4 [9.6]	1.2 [8.3]
	4.5	0.28	4.0 [27.6]	3.2 [22.2]	2.8 [19.3]	2.5 [17.2]
	6.0	0.38	7.2 [49.6]	5.9 [40.6]	5.2 [35.8]	4.7 [32.4]
030	3.8	0.24	1.3 [9.0]	0.9 [6.1]	0.7 [4.8]	0.6 [4.1]
	5.6	0.35	2.3 [15.8]	1.8 [12.5]	1.5 [10.3]	1.4 [9.6]
	7.5	0.47	4.2 [28.9]	3.4 [23.2]	2.9 [20]	2.6 [17.9]
036	4.5	0.28	1.8 [12.4]	1.4 [9.6]	1.2 [8.3]	1.0 [6.9]
	6.8	0.43	3.1 [21.4]	2.4 [16.8]	2.1 [14.7]	1.9 [13.1]
	9.0	0.57	5.4 [37.2]	4.4 [30.0]	3.8 [26.2]	3.4 [23.4]
042	5.3	0.33	2.3 [15.8]	1.8 [12.1]	1.5 [10.3]	1.3 [9.0]
	7.9	0.50	4.3 [29.6]	3.5 [24.2]	3.1 [26.4]	2.8 [19.3]
	10.5	0.66	7.9 [54.4]	6.5 [44.8]	5.7 [39.3]	5.2 [35.8]
048	6.0	.038	1.8 [12.4]	1.5 [10.1]	1.3 [9.0]	1.2 [8.3]
	9.0	0.57	3.4 [23.4]	3.0 [20.4]	2.7 [18.6]	2.6 [17.9]
	12.0	0.76	6.2 [42.7]	5.5 [37.9]	5.1 [35.1]	4.8 [35.1]
060	7.5	0.47	3.4 [23.4]	2.8 [19.2]	2.4 [16.5]	2.2 [15.2]
	11.3	0.71	6.8 [46.9]	5.9 [40.8]	5.4 [37.2]	5.0 [34.5]
	15.0	0.95	12.6 [86.8]	11.1 [76.8]	10.3 [71.0]	9.6 [66.1]

Operating Pressure/Temperature Tables Include the Following Notes:

- Airflow is at nominal (rated) conditions;
- Entering air is based upon 70°F [21°C] DB in heating and 80/67°F [27/19°C] in cooling;
- Subcooling is based upon head pressure at compressor service port;
- Cooling air and water values can vary greatly with changes in humidity level.

Table 11: TT Series Typical Unit Operating Pressures and Temperatures (60Hz - I-P Units)

TT026		Full Load Cooling - without HWG active						Full Load Heating - without HWG active					
Entering Water Temp °F	Water Flow GPM/ton	Suction Pressure PSIG	Discharge Pressure PSIG	Superheat	Subcooling	Water Temp Rise °F	Air Temp Drop °F DB	Suction Pressure PSIG	Discharge Pressure PSIG	Superheat	Subcooling	Water Temp Drop °F	Air Temp Rise °F DB
30*	1.5	118-128	159-179	25-30	9-14	16.7-18.7	19-25	72-83	273-293	6-11	3-8	5.9-7.9	16-22
	2.25	118-128	146-166	25-30	7-12	12.3-14.3	20-26	75-85	275-295	6-11	3-8	4.2-6.2	17-23
	3	118-128	132-152	25-30	7-12	7.9-9.9	20-26	78-88	277-297	6-11	3-8	2.7-4.7	18-24
50	1.5	128-138	186-206	18-23	8-13	16.3-18.3	19-25	102-112	302-322	8-12	6-11	8.9-10.9	22-28
	2.25	128-138	172-192	18-23	6-11	12.1-14.1	20-26	106-116	303-323	8-12	6-11	6.7-8.7	23-29
	3	128-138	158-178	18-23	6-11	7.8-9.8	20-26	110-120	305-325	8-12	6-11	4.5-6.5	23-29
70	1.5	136-146	281-301	7-12	7-12	15.7-17.7	19-25	128-138	330-350	10-15	8-13	11.3-13.3	27-34
	2.25	136-146	267-287	7-12	5-10	11.6-13.6	19-25	134-144	332-352	10-15	8-13	8.5-10.5	28-35
	3	136-146	253-273	7-12	4-9	7.6-9.6	19-25	141-151	334-354	10-15	8-13	5.8-7.8	28-35
90	1.5	139-149	368-388	6-11	7-12	14.9-16.9	18-24	162-172	367-387	14-19	10-15	14.4-16.4	33-41
	2.25	139-149	354-374	6-11	5-10	11-13	18-24	166-176	372-392	15-20	10-15	10.8-12.8	34-42
	3	139-149	340-360	6-11	5-10	7.2-9.2	18-24	171-181	377-397	17-22	10-15	7.1-9.1	34-42
110	1.5	143-153	465-485	6-11	7-12	13.9-15.9	17-23						
	2.25	143-153	450-470	6-11	5-10	10.2-12.2	17-23						
	3	143-153	433-453	6-11	5-10	6.5-8.5	17-23						

*Based on 15% Methanol antifreeze solution

TT038		Full Load Cooling - without HWG active						Full Load Heating - without HWG active					
Entering Water Temp °F	Water Flow GPM/ ton	Suction Pressure PSIG	Discharge Pressure PSIG	Superheat	Subcooling	Water Temp Rise °F	Air Temp Drop °F DB	Suction Pressure PSIG	Discharge Pressure PSIG	Superheat	Subcooling	Water Temp Drop °F	Air Temp Rise °F DB
30*	1.5	120-130	156-176	25-30	9-14	22.1-24.1	18-24	69-79	293-313	7-12	14-19	8.9-10.9	17-23
	2.25	119-129	148-168	25-30	8-13	16.8-18.8	19-25	73-83	297-317	7-12	14-19	6.7-8.7	18-24
	3	119-129	138-158	25-30	8-13	10.5-12.5	19-25	76-86	300-320	7-12	14-19	4.5-6.5	19-25
50	1.5	129-139	225-245	15-20	10-15	21.9-23.9	18-24	96-106	322-342	10-15	17-22	12.2-14.2	23-29
	2.25	128-138	211-231	15-20	9-14	16.1-18.1	19-25	100-110	326-346	10-15	17-22	9.3-11.3	24-30
	3	128-138	197-217	15-20	9-14	10.3-12.3	19-25	105-115	331-351	10-15	17-22	6.4-8.4	24-30
70	1.5	136-146	302-322	9-14	13-18	21.5-23.5	18-24	123-133	352-372	11-16	19-24	15-17	28-35
	2.25	135-145	283-303	9-14	12-17	15.8-17.8	19-25	129-139	358-378	11-16	19-24	11.6-13.6	29-36
	3	135-145	265-285	9-14	12-17	10-12	19-25	135-145	364-384	11-16	19-24	8.2-10.2	30-37
90	1.5	140-150	390-410	7-12	13-18	20.5-22.5	17-23	157-167	390-410	13-18	18-23	21-23	36-44
	2.25	140-150	369-389	8-13	8-13	14.9-16.9	17-23	169-179	399-419	13-18	16.5-21.5	15.5-17.5	37-45
	3	140-150	349-369	8-13	8-13	9.3-11.3	17-23	181-191	408-428	14-19	15-20	10.5-12.5	39-47
110	1.5	145-155	488-508	7-12	13-18	19-21	17-23						
	2.25	145-155	467-487	8-13	8-13	14-16	17-23						
	3	145-155	447-467	8-13	8-13	9-11	17-23						

*Based on 15% Methanol antifreeze solution

Table 11: TT Series Typical Unit Operating Pressures and Temperatures: Continued

TT049		Full Load Cooling - without HWG active						Full Load Heating - without HWG active					
Entering Water Temp °F	Water Flow GPM/ ton	Suction Pressure PSIG	Discharge Pressure PSIG	Superheat	Subcooling	Water Temp Rise °F	Air Temp Drop °F DB	Suction Pressure PSIG	Discharge Pressure PSIG	Superheat	Subcooling	Water Temp Drop °F	Air Temp Rise °F DB
30*	1.5	112-122	187-207	22-27	14-19	20.7-22.7	18-24	66-76	286-306	7-12	8-13	8-10	18-24
	2.25	111-121	167-187	22-27	12-17	15.5-17.5	18-24	69-79	289-309	7-12	9-14	6-8	19-25
	3	111-121	147-167	23-28	11-16	10.2-12.2	18-24	72-82	292-312	7-12	9-14	4-6	19-25
50	1.5	125-135	242-262	13-18	10-15	20.9-22.9	19-25	93-103	314-334	8-13	10-15	11.5-13.5	23-29
	2.25	123-133	224-244	13-18	9-14	15.6-17.6	19-25	98-108	320-340	8-13	10-15	8.7-10.7	24-30
	3	122-132	205-225	14-19	7-12	10.2-12.2	19-25	103-113	326-346	8-13	10-15	5.9-7.9	25-31
70	1.5	133-143	310-330	8-13	8-13	20.5-22.5	19-25	123-133	344-364	9-14	9-14	15-17	28-35
	2.25	132-142	290-310	8-13	7-12	15.2-17.2	19-25	130-140	354-374	9-14	9-14	11.5-13.5	29-36
	3	131-141	270-290	9-14	5-10	9.9-11.9	19-25	137-147	361-381	9-14	9-14	7.9-9.9	30-37
90	1.5	138-148	396-416	7-12	7-12	19.2-21.2	18-24	165-175	390-410	13-18	8-13	19.6-21.6	37-45
	2.25	137-147	374-394	7-12	6-11	14.3-16.3	18-24	175-185	401-421	15-20	8-13	15-17	38-46
	3	136-146	352-372	7-12	4-9	9.3-11.3	18-24	185-195	413-433	17-22	8-13	10.3-12.3	39-47
110	1.5	144-154	497-517	7-12	5-10	18-20	17-23						
	2.25	143-153	472-492	7-12	4-9	13.3-15.3	17-23						
	3	142-152	447-467	7-12	3-8	8.5-10.5	17-23						

*Based on 15% Methanol antifreeze solution

TT064		Full Load Cooling - without HWG active						Full Load Heating - without HWG active					
Entering Water Temp °F	Water Flow GPM/ton	Suction Pressure PSIG	Discharge Pressure PSIG	Superheat	Subcooling	Water Temp Rise °F	Air Temp Drop °F DB	Suction Pressure PSIG	Discharge Pressure PSIG	Superheat	Subcooling	Water Temp Drop °F	Air Temp Rise °F DB
30*	1.5	117-127	170-190	27-32	15-20	18.2-20.2	17-23	66-76	282-302	10-16	9-14	8-10	19-25
	2.25	116-126	143-163	28-33	13-18	12.6-14.6	17-23	69-79	285-305	10-16	9-14	6-8	19-25
	3	115-125	135-155	29-34	12-17	7-9	17-23	72-82	289-309	10-16	10-15	4-6	20-26
50	1.5	128-138	238-258	16-21	14-19	20.5-22.5	21-27	90-100	310-330	11-17	12-17	11.3-13.3	24-30
	2.25	126-136	222-242	21-26	13-18	14.9-16.9	21-27	95-105	313-333	11-17	12-17	8.5-10.5	25-31
	3	125-135	205-225	26-31	12-17	9.2-11.2	21-27	99-109	316-336	11-17	12-17	5.7-7.7	26-32
70	1.5	135-145	315-335	10-15	14-19	21-23	22-28	115-125	337-357	12-18	14-19	14-16	28-35
	2.25	134-144	296-316	12-17	13-18	15.5-17.5	22-28	120-130	341-361	12-18	14-19	10.6-12.6	29-36
	3	133-143	276-296	15-20	11-16	10-12	22-28	126-136	345-365	12-18	15-20	7.3-9.3	30-37
90	1.5	139-149	408-428	10-15	15-20	20.1-22.1	21-27	157-167	390-410	15-20	14-19	18.2-20.2	37-45
	2.25	138-148	386-406	10-15	13-18	14.8-16.8	21-27	161-171	394-414	15-20	14-19	13.9-15.9	38-46
	3	138-148	364-384	10-15	11-16	9.5-11.5	21-27	166-176	398-418	15-20	15-20	9.6-11.6	39-47
110	1.5	144-154	515-535	8-13	14-19	19-21	20-26						
	2.25	143-153	493-513	8-13	13-18	14-16	20-26						
	3	142-152	469-489	8-13	12-17	9-11	20-26						

*Based on 15% Methanol antifreeze solution

TT072		Full Load Cooling - without HWG active						Full Load Heating - without HWG active					
Entering Water Temp °F	Water Flow GPM/ton	Suction Pressure PSIG	Discharge Pressure PSIG	Superheat	Subcooling	Water Temp Rise °F	Air Temp Drop °F DB	Suction Pressure PSIG	Discharge Pressure PSIG	Superheat	Subcooling	Water Temp Drop °F	Air Temp Rise °F DB
30*	1.5	119-129	155-175	25-30	17-22	18-20	21-27	61-71	292-312	11-16	13-18	7.2-9.2	19-25
	2.25	117-127	150-170	25-30	17-22	13.2-15.2	21-27	65-75	296-316	11-16	14-19	5.4-7.4	20-26
	3	115-125	144-164	28-32	17-22	8.4-9.4	22-28	68-78	300-320	10-15	15-20	3.5-5.5	21-27
50	1.5	131-141	210-230	10-15	12-17	18.5-20.5	22-28	89-99	327-347	10-15	19-24	10.9-12.9	26-32
	2.25	130-140	205-225	11-16	12-17	14-16	23-29	98-108	337-357	10-15	14-19	8.3-10.3	28-34
	3	129-139	200-220	13-18	12-17	9.5-11.5	24-30	106-116	348-368	10-15	9-14	5.7-7.7	30-36
70	1.5	135-145	300-320	10-15	15-20	17.6-19.6	23-29	119-129	365-385	10-15	21-26	14.7-16.7	33-39
	2.25	131-141	295-315	11-16	14-19	13.8-15.8	23-29	132-142	380-400	10-15	16-21	11.3-13.3	36-42
	3	128-138	290-310	13-18	14-19	10-12	23-29	144-154	395-415	10-15	11-16	7.9-9.9	38-44
90	1.5	139-149	390-410	10-15	16-21	16.7-18.7	22-28	162-172	418-438	10-15	19-24	19.4-21.4	43-49
	2.25	137-147	370-390	10-15	14-19	12.6-14.6	22-28	172-182	430-450	10-15	19-24	14.7-16.7	45-51
	3	135-145	350-370	10-15	13-18	8.5-10.5	22-28	182-192	444-464	11-16	19-24	10.1-12.1	47-53
110	1.5	145-155	490-510	10-15	16-21	15.9-17.9	20-27						
	2.25	145-155	470-490	10-15	14-19	11.7-13.7	20-27						
	3	144-154	452-472	9-14	13-18	7.4-9	20-27						

*Based on 15% Methanol antifreeze solution

Table 12: TS Series Typical Unit Operating Pressures and Temperatures (60Hz - I-P Units)

TS006		Full Load Cooling						Full Load Heating					
Entering Water Temp °F	Water Flow GPM/ton	Suction Pressure PSIG	Discharge Pressure PSIG	Superheat	Subcooling	Water Temp Drop °F	Air Temp Rise °F DB	Suction Pressure PSIG	Discharge Pressure PSIG	Superheat	Subcooling	Water Temp Drop °F	Air Temp Rise °F DB
30*	1.5	114-124	142-162	24-29	3-8	15.2-17.2	17-23	75-85	272-292	13-18	4-9	5.9-7.9	16-22
	2.25	111-121	132-152	26-31	3-8	11.4-13.4	17-23	78-88	274-294	13-18	4-9	4.3-6.3	16-22
	3	109-119	122-142	28-33	3-8	7.5-9.5	17-23	81-91	276-296	13-18	4-9	2.7-4.7	17-23
50	1.5	130-140	190-210	14-19	2-7	16.5-18.5	18-24	104-114	299-319	12-17	6-11	8.8-10.8	21-27
	2.25	129-139	180-200	16-21	2-7	12.3-14.3	18-24	112-122	304-324	12-17	4-9	6.7-8.7	22-28
	3	128-138	170-190	19-24	2-7	8-10	18-24	120-130	308-328	12-17	3-8	4.5-6.5	23-29
70	1.5	143-153	265-285	9-14	2-7	15.5-17.5	18-24	129-139	321-341	11-16	7-12	11.2-13.2	25-31
	2.25	141-151	252-272	10-15	2-7	11.5-13.5	18-24	144-154	330-350	13-18	4-9	8.8-10.8	27-33
	3	140-150	240-260	11-16	2-7	7.5-9.5	18-24	159-169	340-360	15-20	3-8	6.3-8.3	28-34
90	1.5	149-159	340-370	8-13	2-7	14.2-16.2	17-23	163-173	349-369	13-18	7-12	14.3-16.3	30-36
	2.25	149-159	335-355	8-13	2-7	10.6-12.6	17-23	180-190	360-380	11-16	4-9	11.2-13.2	32-38
	3	148-158	320-340	8-13	2-7	7-9	17-23	198-208	372-392	10-15	3-8	8.1-10.1	34-40
110	1.5	154-164	451-471	8-13	2-7	12.7-14.7	15-21						
	2.25	154-164	428-448	8-13	2-7	9.5-11.5	15-21						
	3	153-163	405-425	8-13	2-7	6.5-8.5	15-21						

*Based on 15% Methanol antifreeze solution

TS009		Full Load Cooling						Full Load Heating					
Entering Water Temp °F	Water Flow GPM/ton	Suction Pressure PSIG	Discharge Pressure PSIG	Superheat	Subcooling	Water Temp Drop °F	Air Temp Rise °F DB	Suction Pressure PSIG	Discharge Pressure PSIG	Superheat	Subcooling	Water Temp Drop °F	Air Temp Rise °F DB
30*	1.5	126-136	161-181	17-22	8-13	19.8-21.8	21-27	74-84	278-298	6-11	4-9	6.1-8.1	18-24
	2.25	126-136	146-166	17-22	7-12	14.9-16.9	21-27	77-87	280-300	6-11	4-9	4.5-6.5	18-24
	3	126-136	131-151	17-22	6-11	9.9-11.9	21-27	79-89	283-303	6-11	3-8	2.8-4.8	19-25
50	1.5	132-142	215-235	10-15	8-13	18.8-20.8	20-26	104-114	309-329	8-12	7-12	9.6-11.6	24-30
	2.25	132-142	200-220	10-15	7-12	14.1-16.1	20-26	106-116	312-332	8-12	7-12	7-9	24-30
	3	132-142	185-205	10-15	6-11	9.4-11.4	20-26	108-118	315-335	8-12	7-12	4.5-6.5	25-31
70	1.5	138-148	278-298	8-13	9-14	17.7-19.7	19-25	127-137	332-352	10-15	10-15	12-14	29-35
	2.25	138-148	263-283	8-13	8-13	13.1-15.1	19-25	132-142	340-360	11-16	10-15	9-10	29-35
	3	137-147	248-268	8-13	7-12	8.5-10.5	19-25	138-148	347-367	13-18	10-15	6.1-8.1	30-36
90	1.5	142-152	365-385	8-13	9-14	16-18	18-24	164-174	372-392	17-22	13-18	14.5-16.5	35-41
	2.25	142-152	351-371	8-13	8-13	12-14	18-24	165-175	375-395	18-23	13-18	11.2-13.2	35-41
	3	142-152	337-357	8-13	7-12	8-10	18-24	167-177	379-399	19-24	13-18	7.9-9.9	36-42
110	1.5	150-160	439-459	7-12	9-14	14.2-16.2	17-23						
	2.25	150-160	439-459	7-12	8-13	10.6-12.6	17-23						
	3	150-160	439-459	7-12	7-12	6.9-8.9	17-23						

*Based on 15% Methanol antifreeze solution

TS012		Full Load Cooling						Full Load Heating					
Entering Water Temp °F	Water Flow GPM/ton	Suction Pressure PSIG	Discharge Pressure PSIG	Superheat	Subcooling	Water Temp Drop °F	Air Temp Rise °F DB	Suction Pressure PSIG	Discharge Pressure PSIG	Superheat	Subcooling	Water Temp Drop °F	Air Temp Rise °F DB
30*	1.5	98-108	140-160	36-41	14-19	17.1-19.1	19-25	72-82	301-321	9-14	12-17	6.5-8.5	21-27
	2.25	98-108	135-155	36-41	12-17	12.5-14.5	19-25	85-95	304-324	9-14	12-17	4.7-6.7	21-27
	3	99-109	127-148	36-41	10-15	7.9-9.9	19-25	78-88	308-328	9-14	12-17	2.9-4.9	22-28
50	1.5	118-128	215-235	22-27	14-19	18.1-20.1	20-26	100-110	337-357	10-15	15-20	9.5-11.5	26-32
	2.25	118-128	200-220	22-27	12-17	13.1-15.1	20-26	98-108	334-354	10-15	15-20	6.6-8.6	26-32
	3	118-128	185-205	22-27	10-15	8.1-10.1	19-25	95-105	332-352	11-16	15-20	3.8-5.8	26-32
70	1.5	132-142	300-320	11-16	12-17	17-19	19-25	115-125	361-381	19-24	18-23	11.1-13.1	29-35
	2.25	132-142	263-282	11-16	10-15	12.6-14.6	19-25	112-122	360-380	20-25	18-23	8-10	29-35
	3	132-142	245-265	12-17	7-12	8.2-10.2	19-25	110-120	356-376	21-26	18-23	4.8-6.8	29-35
90	1.5	138-148	366-386	9-14	11-16	15.8-17.8	18-24	122-132	376-396	34-39	22-27	12.1-14.1	32-38
	2.25	138-148	353-373	9-14	9-14	14.9-16.9	18-24	123-133	378-398	36-41	22-27	9-11	32-38
	3	138-148	340-360	9-14	6-11	14-16	18-24	124-134	380-400	38-43	23-28	5.8-7.8	32-38
110	1.5	145-155	453-473	9-14	9-14	14.7-16.7	16-22						
	2.25	145-155	442-462	9-14	7-12	10.8-12.8	16-22						
	3	145-155	431-451	9-14	5-10	6.8-8.8	17-23						

*Based on 15% Methanol antifreeze solution

Table 12: TS Series Typical Unit Operating Pressures and Temperatures: Continued

TS018		Full Load Cooling - without HWG active						Full Load Heating - without HWG active					
Entering Water Temp °F	Water Flow GPM/ton	Suction Pressure PSIG	Discharge Pressure PSIG	Superheat	Subcooling	Water Temp Rise °F	Air Temp Drop °F DB	Suction Pressure PSIG	Discharge Pressure PSIG	Superheat	Subcooling	Water Temp Drop °F	Air Temp Rise °F DB
30*	1.5	120-130	155-175	27-32	11-16	16.9-19.9	16-22	73-83	268-288	8-13	4-9	6.1-8.1	15-21
	2.25	120-130	142-162	27-32	9-14	12.5-14.5	17-23	75-85	270-290	8-13	4-9	4.4-6.4	16-22
	3	120-130	128-148	27-32	9-14	8.1-10.1	17-23	78-88	272-292	8-13	4-9	2.9-4.9	16-22
50	1.5	137-147	220-240	16-21	10-15	17-19	16-22	102-112	295-315	8-13	8-13	9.1-11.1	20-26
	2.25	137-147	206-226	16-21	8-13	12.6-14.6	17-23	106-116	297-317	8-13	8-13	6.9-8.9	21-27
	3	137-147	192-212	16-21	8-13	8.4-10.4	17-23	110-120	299-319	8-13	8-13	4.7-6.7	21-27
70	1.5	142-152	287-307	7-12	10-15	15.9-17.9	16-22	131-141	324-344	9-14	10-15	12.1-14.1	25-33
	2.25	142-152	273-239	7-12	8-13	11.8-13.8	17-23	137-147	326-346	9-14	10-15	9.3-11.3	26-34
	3	142-152	259-279	7-12	8-13	7.8-9.8	17-23	144-154	328-348	9-14	10-15	6.6-8.6	26-34
90	1.5	146-156	375-395	6-11	10-15	14.9-16.9	16-22	174-184	360-380	10-15	12-17	15.8-17.8	32-40
	2.25	146-156	361-381	6-11	8-13	11-13	17-23	180-190	367-387	11-16	12-17	11.9-13.9	33-41
	3	146-156	347-367	6-11	8-13	7.2-9.2	17-23	187-197	374-394	12-17	12-17	8-10	33-41
110	1.5	154-164	478-498	6-11	10-15	14-16	16-22						
	2.25	154-164	461-481	6-11	8-13	10.2-12.2	16-22						
	3	154-164	445-465	6-11	8-13	6.5-8.5	16-22						

*Based on 15% Methanol antifreeze solution

TS024		Full Load Cooling - without HWG active						Full Load Heating - without HWG active					
Entering Water Temp °F	Water Flow GPM/ton	Suction Pressure PSIG	Discharge Pressure PSIG	Superheat	Subcooling	Water Temp Rise °F	Air Temp Drop °F DB	Suction Pressure PSIG	Discharge Pressure PSIG	Superheat	Subcooling	Water Temp Drop °F	Air Temp Rise °F DB
30*	1.5	115-125	154-174	40-45	8-13	16.5-18.5	19-25	73-83	283-303	8-12	6-11	5.9-7.9	16-22
	2.25	115-125	141-161	40-45	6-11	12.1-14.1	20-26	75-85	285-305	8-12	6-11	4.2-6.2	17-23
	3	115-125	127-147	40-45	6-11	77.7-9.7	20-26	78-88	287-307	8-12	6-11	2.7-4.7	18-24
50	1.5	115-120	209-229	24-29	10-15	15.7-17.7	18-24	102-112	313-333	8-12	8-13	8.9-10.9	22-28
	2.25	115-120	195-215	24-29	8-13	11.6-13.6	18-24	106-116	314-334	8-12	8-13	6.7-8.7	23-29
	3	115-120	181-201	24-29	8-13	7.6-9.6	18-24	110-120	316-336	8-12	8-13	4.5-6.5	23-29
70	1.5	136-146	275-295	6-11	6-11	15.7-17.7	18-24	128-138	340-360	9-14	9-14	11.3-13.3	27-34
	2.25	136-146	261-281	6-11	5-10	11.6-13.6	18-24	134-144	342-362	9-14	9-14	8.5-10.5	28-35
	3	136-146	247-267	6-11	4-9	7.6-9.6	18-24	141-151	344-364	9-14	9-14	5.8-7.8	28-35
90	1.5	140-150	361-381	6-11	6-11	14.9-16.9	18-24	162-172	370-390	14-19	9-14	14.4-16.4	32-40
	2.25	140-150	347-367	6-11	5-10	11-13	18-24	166-176	376-396	15-20	9-14	10.8-12.8	34-42
	3	140-150	333-353	6-11	4-9	7.2-9.2	18-24	171-181	383-403	16-21	9-14	7.1-9.1	34-42
110	1.5	144-154	460-480	6-11	6-11	13.9-15.9	17-23						
	2.25	144-154	445-465	6-11	4-9	10.2-12.2	17-23						
	3	144-154	428-448	6-11	4-9	6.5-8.5	17-23						

*Based on 15% Methanol antifreeze solution

TS030		Full Load Cooling - without HWG active						Full Load Heating - without HWG active					
Entering Water Temp °F	Water Flow GPM/ton	Suction Pressure PSIG	Discharge Pressure PSIG	Superheat	Subcooling	Water Temp Rise °F	Air Temp Drop °F DB	Suction Pressure PSIG	Discharge Pressure PSIG	Superheat	Subcooling	Water Temp Drop °F	Air Temp Rise °F DB
30*	1.5	116-126	146-166	27-32	7-13	19.6-21.6	16-22	69-79	275-295	7-12	6-11	7.2-9.2	16-22
	2.25	115-125	138-158	27-32	6-11	14.3-16.3	17-23	73-83	277-297	7-12	6-11	5.4-7.4	17-23
	3	115-125	128-148	27-32	6-11	8-10	17-23	76-86	279-299	7-12	6-11	3.5-5.5	17-23
50	1.5	129-139	217-237	12-17	6-11	20.8-22.8	17-23	96-106	300-320	10-15	9-14	10.5-12.5	21-27
	2.25	128-138	203-223	12-17	5-10	15-17	18-24	100-110	304-324	10-15	9-14	7.6-9.6	22-28
	3	128-138	189-209	12-17	5-10	9.2-11.2	18-24	105-115	309-329	10-15	9-14	4.8-6.8	22-28
70	1.5	132-142	293-313	9-14	6-11	20.1-22.1	17-23	123-133	327-347	11-16	11-16	13.2-15.2	25-32
	2.25	131-141	274-294	9-14	5-10	14.4-16.4	18-24	129-139	333-353	11-16	11-16	9.8-11.8	26-33
	3	131-141	256-276	9-14	5-10	8.6-10.6	18-24	135-145	339-359	11-16	11-16	6.4-8.4	27-34
90	1.5	137-147	383-403	7-12	5-10	19.4-21.4	16-22	155-165	355-375	13-18	11-16	16.8-18.8	30-38
	2.25	137-147	362-382	7-12	5-10	13.8-15.8	16-22	162-172	362-382	14-19	11-16	12.7-14.7	31-39
	3	137-147	342-362	7-12	5-10	8.2-10.2	16-22	169-179	369-389	16-21	11-16	8.6-10.6	32-40
110	1.5	143-153	475-495	6-11	9-14	18.2-20.2	16-22						
	2.25	143-153	457-477	6-11	6-11	13-14	16-22						
	3	143-153	439-459	6-11	6-11	7.7-9.7	16-22						

*Based on 15% Methanol antifreeze solution

Table 12: TS Series Typical Unit Operating Pressures and Temperatures: Continued

TS036		Full Load Cooling - without HWG active						Full Load Heating - without HWG active					
Entering Water Temp °F	Water Flow GPM/ton	Suction Pressure PSIG	Discharge Pressure PSIG	Superheat	Subcooling	Water Temp Rise °F	Air Temp Drop °F DB	Suction Pressure PSIG	Discharge Pressure PSIG	Superheat	Subcooling	Water Temp Drop °F	Air Temp Rise °F DB
30*	1.5	117-127	142-162	33-38	8-14	19.1-21.1	15-22	69-79	276-296	10-15	10-15	7.2-9.2	17-23
	2.25	116-126	134-154	33-38	7-12	13.8-15.8	15-22	73-83	278-298	10-15	10-15	5.3-7.3	18-24
	3	116-126	124-144	33-38	7-12	7.4-9.4	15-22	76-86	280-300	10-15	10-15	3.5-5.5	18-24
50	1.5	136-146	211-231	11-16	6-11	20.6-22.6	17-23	99-109	302-322	10-15	13-18	10.6-12.6	22-28
	2.25	136-146	197-217	11-16	5-10	14.8-16.8	17-23	103-113	306-326	10-15	13-18	7.7-9.7	23-29
	3	136-146	183-203	11-16	5-10	9-11	17-23	108-118	311-331	10-15	13-18	5-7	23-29
70	1.5	137-147	275-295	9-14	10-15	19-21	18-24	127-137	332-352	10-15	15-20	13.5-15.5	27-34
	2.25	137-147	260-280	9-14	9-14	13.8-15.8	19-25	133-143	338-358	10-15	15-20	10.1-12.1	28-35
	3	137-147	245-265	9-14	9-14	8-10	19-25	139-149	344-364	10-15	15-20	6.7-8.7	29-36
90	1.5	142-152	373-393	7-12	10-15	19.5-21.5	17-23	164-174	365-385	11-16	15-20	17.4-19.4	34-42
	2.25	142-152	352-372	8-13	6-11	13.9-15.9	17-23	172-182	372-392	11-16	15-20	13.2-15.2	35-43
	3	142-152	332-352	8-13	6-11	8.3-10.3	17-23	181-191	379-399	12-17	15-20	9-11	36-44
110	1.5	147-157	467-487	6-11	10-15	16.2-18.2	16-22						
	2.25	147-157	448-468	6-11	8-13	11.9-13.9	16-22						
	3	147-157	430-450	6-11	7-12	7.6-9.6	16-22						

*Based on 15% Methanol antifreeze solution

TS042		Full Load Cooling - without HWG active						Full Load Heating - without HWG active					
Entering Water Temp °F	Water Flow GPM/ton	Suction Pressure PSIG	Discharge Pressure PSIG	Superheat	Subcooling	Water Temp Rise °F	Air Temp Drop °F DB	Suction Pressure PSIG	Discharge Pressure PSIG	Superheat	Subcooling	Water Temp Drop °F	Air Temp Rise °F DB
30*	1.5	114-124	170-190	27-32	10-15	17.2-19.2	17-23	69-79	286-306	5-10	5-10	4.5-6.5	16-22
	2.25	113-123	150-170	27-32	9-14	12.7-14.7	17-23	72-82	289-309	5-10	6-11	3.9-5.9	17-23
	3	113-123	131-151	27-32	7-12	8.2-10.2	17-23	75-85	292-312	6-11	6-11	3.2-5.2	18-24
50	1.5	130-140	226-246	10-15	6-11	17.8-19.8	20-26	100-110	315-335	7-12	6-11	9-11	22-28
	2.25	129-139	208-228	10-15	5-10	13.3-15.3	20-26	105-115	322-342	8-13	6-11	7-9	23-29
	3	129-139	190-210	10-15	4-9	8.8-10.8	20-26	110-120	330-350	10-15	7-12	5-7	24-30
70	1.5	132-142	290-310	6-11	6-11	17.3-19.3	19-25	131-141	347-367	11-16	6-11	13.4-15.4	29-35
	2.25	131-141	273-293	6-11	5-10	12.8-14.8	19-25	138-148	358-378	13-18	8-13	10-12	30-36
	3	131-141	255-275	6-11	4-9	8.3-10.3	19-25	145-155	369-389	16-21	9-14	6.9-8.9	31-37
90	1.5	136-146	370-390	6-11	6-11	16-18	17-23	175-185	393-413	19-24	7-12	17.6-19.6	36-42
	2.25	135-145	350-370	6-11	5-10	11.8-13.8	17-23	177-187	401-421	20-25	9-14	13.2-15.2	37-43
	3	135-145	330-350	6-11	4-9	7.6-9.6	17-23	180-190	409-429	22-27	12-17	8.7-10.7	38-44
110	1.5	143-153	469-489	6-11	6-11	14-16	16-22						
	2.25	142-152	448-468	6-11	5-10	11-13	16-22						
	3	141-151	427-447	6-11	4-9	7-9	16-22						

*Based on 15% Methanol antifreeze solution

TS048		Full Load Cooling - without HWG active						Full Load Heating - without HWG active					
Entering Water Temp °F	Water Flow GPM/ton	Suction Pressure PSIG	Discharge Pressure PSIG	Superheat	Subcooling	Water Temp Rise °F	Air Temp Drop °F DB	Suction Pressure PSIG	Discharge Pressure PSIG	Superheat	Subcooling	Water Temp Drop °F	Air Temp Rise °F DB
30*	1.5	108-118	180-200	27-32	12-17	19.8-21.8	19-25	65-75	293-313	7-12	9-14	8.2-10.2	17-23
	2.25	107-117	161-181	28-33	10-15	14.8-16.8	19-25	68-78	297-217	8-13	9-14	6.2-8.2	18-24
	3	107-117	142-162	29-34	9-14	9.8-11.8	19-25	72-82	301-321	9-14	9-14	4.2-6.2	19-25
50	1.5	123-133	236-256	16-21	8-13	20.2-22.2	21-27	92-102	321-341	10-15	11-16	11.6-13.6	23-29
	2.25	122-132	218-238	17-22	7-12	15.2-18.2	21-27	100-110	330-350	11-16	11-16	8.9-10.9	24-30
	3	122-132	200-220	17-22	6-11	10.2-12.2	21-27	108-118	340-360	12-17	11-16	6-8	26-32
70	1.5	130-140	305-325	10-15	8-13	20-22	20-26	122-132	353-373	12-17	11-16	15-17	29-35
	2.25	129-139	285-305	11-16	6-11	15-17	20-26	133-143	365-385	14-19	11-16	11.5-13.5	31-37
	3	129-139	265-285	11-16	5-10	10-12	20-26	144-154	378-398	16-21	11-16	8-10	33-39
90	1.5	133-143	390-410	8-13	8-13	19-21	19-25	166-176	397-417	16-21	9-14	19.5-21.5	37-43
	2.25	132-142	368-388	9-14	6-11	14-16	19-25	173-183	407-727	18-23	9-14	14.7-16.7	38-44
	3	132-142	345-365	9-14	5-10	9-11	19-25	181-191	417-437	19-24	10-15	9.9-11.9	40-46
110	1.5	141-151	497-517	6-11	8-13	18-20	18-24						
	2.25	140-150	472-492	7-12	6-11	13.5-15.5	18-24						
	3	140-150	447-467	8-13	5-10	8.7-10.7	18-24						

*Based on 15% Methanol antifreeze solution

Table 12: TS Series Typical Unit Operating Pressures and Temperatures: Continued

TS060		Full Load Cooling - without HWG active						Full Load Heating - without HWG active					
Entering Water Temp °F	Water Flow GPM/ton	Suction Pressure PSIG	Discharge Pressure PSIG	Superheat	Subcooling	Water Temp Rise °F	Air Temp Drop °F DB	Suction Pressure PSIG	Discharge Pressure PSIG	Superheat	Subcooling	Water Temp Drop °F	Air Temp Rise °F DB
30*	1.5	98-108	160-180	40-45	12-17	20-22	19-25	62-72	276-296	6-11	6-11	8-10	17-23
	2.25	97-107	149-169	41-46	12-17	14.3-16.3	19-25	66-76	280-300	6-11	6-11	6-8	18-24
	3	96-106	137-157	42-48	11-16	8.5-10.5	20-26	70-80	284-304	7-12	6-11	4-6	19-25
50	1.5	118-128	225-245	36-41	11-16	21.2-23.2	19-25	88-98	306-326	10-15	8-13	11-13	23-29
	2.25	117-127	210-230	37-42	10-15	15.7-17.7	20-26	94-104	311-331	10-15	8-13	8.3-10.3	24-30
	3	115-125	195-215	38-43	9-14	10.2-12.2	21-27	100-110	317-337	11-16	9-14	5.5-7.5	25-31
70	1.5	135-145	300-320	12-17	9-14	20.3-22.3	21-27	112-122	333-353	12-17	10-15	14-16	28-34
	2.25	133-143	285-305	14-19	8-13	15-17	21-27	122-132	342-362	14-19	10-15	10.5-12.5	30-36
	3	132-142	270-290	16-21	7-12	10-12	22-28	130-140	351-371	15-20	11-16	7.3-9.3	32-38
90	1.5	139-149	390-410	8-13	7-12	19.3-21.3	20-26	147-157	369-389	15-20	10-15	17.7-19.7	36-42
	2.25	138-148	370-390	8-13	6-11	14.3-16.3	21-27	154-164	377-397	18-23	10-15	13.4-15.4	37-43
	3	138-148	350-370	8-13	6-11	9.3-11.3	21-27	160-170	385-405	19-24	11-16	9-11	38-44
110	1.5	144-154	488-508	8-13	8-13	18.4-20.4	21-27						
	2.25	143-153	468-488	7-12	6-11	13.6-15.6	21-27						
	3	142-152	448-468	7-12	5-10	8.8-10.8	21-27						

*Based on 15% Methanol antifreeze solution

TS070		Full Load Cooling - without HWG active						Full Load Heating - without HWG active					
Entering Water Temp °F	Water Flow GPM/ton	Suction Pressure PSIG	Discharge Pressure PSIG	Superheat	Subcooling	Water Temp Rise °F	Air Temp Drop °F DB	Suction Pressure PSIG	Discharge Pressure PSIG	Superheat	Subcooling	Water Temp Drop °F	Air Temp Rise °F DB
30*	1.5	110-120	177-197	36-41	15-20	20.2-22.2	21-27	61-71	290-310	12-18	9-14	8-10	19-25
	2.25	109-119	162-182	37-42	13-18	15-17	21-27	65-75	292-312	12-18	10-15	6-8	20-26
	3	107-117	147-167	38-43	11-16	9.7-11.7	22-28	68-78	296-316	12-18	10-15	4-6	21-27
50	1.5	128-138	246-266	18-23	11-16	21-23	22-28	88-98	320-340	11-17	13-18	11.7-13.7	26-32
	2.25	128-138	228-248	19-24	9-14	15.6-17.6	23-29	96-106	330-350	11-17	11-16	9-11	27-33
	3	127-137	210-230	20-25	6-11	10.2-12.2	24-30	105-115	338-358	11-17	9-14	6-8	29-35
70	1.5	134-144	305-325	9-14	11-16	20.8-22.8	23-29	118-128	355-375	10-16	14-19	15.2-17.2	33-39
	2.25	133-143	289-309	9-14	9-14	15.4-17.4	23-29	130-140	368-388	12-18	13-18	11.7-13.7	35-41
	3	131-141	273-293	9-14	6-11	10-12	23-29	141-151	380-400	15-21	11-16	8-10	37-43
90	1.5	140-150	390-410	10-15	11-16	19.6-21.6	22-28	158-168	401-421	9-15	13-18	19.5-21.5	41-47
	2.25	139-149	373-393	10-15	9-14	14.5-16.5	22-28	168-178	412-432	10-16	12-17	14.8-16.8	43-49
	3	138-148	355-375	10-15	6-11	9.3-11.3	22-28	178-188	423-443	12-18	12-17	10-12	45-51
110	1.5	144-154	488-508	10-15	9-14	18.4-20.4	20-27						
	2.25	143-153	468-488	10-15	6-11	13.6-15.6	20-27						
	3	142-152	448-468	9-14	5-10	8.8-10.8	20-27						

*Based on 15% Methanol antifreeze solution

Table 13: TR/TC Series Typical Unit Operating Pressures and Temperatures

TR/TC006		Full Load Cooling - without HWG active						Full Load Heating - without HWG active					
Entering Water Temp °F	Water Flow GPM/ton	Suction Pressure PSIG	Discharge Pressure PSIG	Superheat	Subcooling	Water Temp Rise °F	Air Temp Drop °F DB	Suction Pressure PSIG	Discharge Pressure PSIG	Superheat	Subcooling	Water Temp Drop °F	Air Temp Rise °F DB
30*	1.5	124-134	159-179	17-22	5-10	18.7-20.7	17-23	71-81	295-315	13-18	5-10	5.9-7.9	17-23
	2.25	120-130	147-167	20-25	5-10	13.6-15.6	18-24	72-82	296-316	14-19	5-10	4.2-6.2	17-23
	3	117-127	136-156	24-29	5-10	8.5-10.5	18-24	74-84	297-317	15-20	5-10	2.5-4.5	17-23
50	1.5	132-142	210-230	7-12	5-10	16.2-18.2	18-24	105-115	330-350	8-13	9-14	8.2-10.2	22-28
	2.25	131-141	199-219	8-13	5-10	11.9-13.9	19-25	110-120	335-355	9-14	9-14	6.1-8.1	22-28
	3	130-140	189-209	9-14	4-9	7.7-9.7	19-25	115-125	339-359	9-14	9-14	4-6	23-29
70	1.5	136-146	275-295	5-10	5-10	15.1-17.1	17-23	136-146	362-382	9-14	10-15	11.3-13.3	27-33
	2.25	136-146	262-282	6-11	4-9	11.1-13.1	18-24	141-151	368-388	9-14	10-15	16.9-18.9	28-34
	3	135-145	250-270	6-11	4-9	7.2-9.2	18-24	147-157	374-394	9-14	10-15	5.6-7.6	29-35
90	1.5	142-152	365-385	5-10	4-9	13.8-15.8	16-22	170-180	402-422	14-19	12-17	14.4-16.4	33-39
	2.25	141-151	353-373	5-10	4-9	10.2-12.2	16-22	173-183	407-427	15-20	12-17	11.1-13.1	33-39
	3	140-150	340-360	5-10	4-9	6.6-8.6	16-22	177-187	412-432	17-22	12-17	7.7-9.1	34-40
110	1.5	148-158	462-482	5-10	4-9	12.5-14.5	14-20						
	2.25	147-157	449-469	5-10	3-8	9.2-11.2	14-20						
	3	146-156	438-458	5-10	3-8	5.9-7.9	14-20						

*Based on 15% Methanol antifreeze solution

TR/TC009		Full Load Cooling - without HWG active						Full Load Heating - without HWG active					
Entering Water Temp °F	Water Flow GPM/ton	Suction Pressure PSIG	Discharge Pressure PSIG	Superheat	Subcooling	Water Temp Rise °F	Air Temp Drop °F DB	Suction Pressure PSIG	Discharge Pressure PSIG	Superheat	Subcooling	Water Temp Drop °F	Air Temp Rise °F DB
30*	1.5	113-123	160-180	22-27	13-18	19.5-21.5	17-23	69-79	331-351	11-16	20-25	7.3-9.3	17-23
	2.25	110-120	147-167	25-30	11-16	14.2-16.2	17-23	72-82	335-355	11-16	20-25	5.4-7.4	18-24
	3	108-118	135-155	28-33	9-14	8.9-10.9	16-21	75-85	339-359	11-16	21-26	3.5-5.5	19-25
50	1.5	124-134	211-231	9-14	10-15	18-20	17-23	101-111	360-380	9-14	20-25	9.8-11.8	23-29
	2.25	122-132	199-219	12-17	9-14	13.2-15.2	17-23	105-115	363-383	9-14	19-24	7.4-9.4	24-30
	3	120-130	187-207	15-20	8-13	8.4-10.4	17-23	110-120	366-386	9-14	19-24	4.9-6.9	24-30
70	1.5	129-139	275-295	7-12	8-13	17.4-19.4	16-22	130-140	400-420	10-15	20-25	12.8-14.8	28-34
	2.25	128-138	261-281	8-13	7-12	12.8-14.8	16-22	137-147	407-427	10-15	19-24	9.6-11.6	29-35
	3	127-137	247-267	8-13	6-11	8.2-10.2	16-22	144-154	414-434	10-15	18-23	6.4-8.4	30-36
90	1.5	136-146	364-384	7-12	3-8	15.7-17.7	15-21	170-180	449-469	13-18	17-22	16-18	34-40
	2.25	135-145	350-370	7-12	4-9	11.7-13.7	15-21	178-188	455-475	14-19	15-20	12-14	35-41
	3	134-144	336-356	7-12	4-9	7.6-9.6	15-21	186-196	460-480	15-20	13-18	7.9-9.9	36-42
110	1.5	142-152	467-487	5-10	4-9	13.5-15.5	13-19						
	2.25	141-151	451-471	5-10	4-9	9.9-11.9	13-19						
	3	140-150	435-455	5-10	3-8	6.3-8.3	13-19						

*Based on 15% Methanol antifreeze solution

TR/TC012		Full Load Cooling - without HWG active						Full Load Heating - without HWG active					
Entering Water Temp °F	Water Flow GPM/ton	Suction Pressure PSIG	Discharge Pressure PSIG	Superheat	Subcooling	Water Temp Rise °F	Air Temp Drop °F DB	Suction Pressure PSIG	Discharge Pressure PSIG	Superheat	Subcooling	Water Temp Drop °F	Air Temp Rise °F DB
30*	1.5	116-126	155-175	14-19	9-14	19.4-21.4	18-24	70-80	311-331	8-13	8-13	6.9-8.9	18-24
	2.25	113-123	144-164	15-20	8-13	14.3-16.3	18-24	72-82	315-335	8-13	8-13	5.1-7.1	19-25
	3	111-121	132-152	17-22	6-11	9.1-11.1	18-24	75-85	319-339	8-13	8-13	3.2-5.2	19-25
50	1.5	123-133	208-228	8-13	9-14	18.1-20.1	17-23	102-112	354-364	8-13	9-14	9.3-11.3	25-31
	2.25	122-132	196-216	9-14	7-12	13.4-15.4	18-24	106-116	355-375	8-13	9-14	7-9	26-32
	3	121-131	184-204	9-14	5-10	8.6-10.6	18-24	110-120	355-375	8-13	9-14	4.6-6.6	26-32
70	1.5	127-137	266-286	7-12	8-13	17.2-19.2	16-22	131-141	392-412	9-14	8-13	12-14	30-36
	2.25	126-136	255-275	8-13	7-12	12.7-14.7	16-22	137-147	395-415	9-14	8-13	9-11	31-37
	3	126-136	244-264	8-13	5-10	8.2-10.2	16-22	144-154	398-418	9-14	7-12	6-8	32-38
90	1.5	133-143	362-382	6-11	7-12	16-18	15-21	175-185	443-463	10-15	3-8	15-17	36-42
	2.25	132-142	342-362	7-12	5-10	11.8-13.8	15-21	183-193	452-472	11-16	3-8	11.2-13.2	37-43
	3	132-142	331-351	7-12	4-9	7.6-9.6	15-21	190-200	461-491	13-18	3-8	7.4-9.4	38-44
110	1.5	140-150	459-479	6-11	4-9	14.4-16.4	13-19						
	2.25	140-150	441-461	6-11	4-9	10.6-12.6	13-19						
	3	139-149	431-451	6-11	3-8	6.9-8.9	13-19						

*Based on 15% Methanol antifreeze solution

Table 13: TR/TC Series Typical Unit Operating Pressures and Temperatures: Continued

TR/TC015		Full Load Cooling - without HWG active						Full Load Heating - without HWG active					
Entering Water Temp °F	Water Flow GPM/ton	Suction Pressure PSIG	Discharge Pressure PSIG	Superheat	Subcooling	Water Temp Rise °F	Air Temp Drop °F DB	Suction Pressure PSIG	Discharge Pressure PSIG	Superheat	Subcooling	Water Temp Drop °F	Air Temp Rise °F DB
30*	1.5	116-126	167-187	15-20	9-14	18.3-20.3	18-24	70-80	279-299	6-11	1-5	7-8	16-22
	2.25	116-126	154-174	15-20	7-12	13.9-15.9	19-25	73-83	281-301	7-12	1-5	5.1-7.1	17-23
	3	116-126	140-160	15-20	7-12	9.5-11.5	19-25	75-85	284-304	7-12	1-5	3.3-5.3	17-23
50	1.5	128-138	194-214	11-14	9-14	17.9-19.9	18-24	102-112	312-332	10-15	2-6	9.9-11.9	22-28
	2.25	128-138	180-200	11-14	7-12	13.7-15.7	19-25	106-116	316-336	10-15	2-6	7.4-9.4	23-29
	3	128-138	166-186	11-14	7-12	9.4-11.4	19-25	110-120	321-341	10-15	2-6	4.9-6.9	23-29
70	1.5	136-146	289-309	7-12	9-14	17.4-19.4	17-23	128-138	335-355	12-17	3-8	12.9-14.9	27-34
	2.25	136-146	275-295	7-12	7-12	15.3-17.3	18-24	134-144	340-360	12-17	3-8	9.7-11.7	28-35
	3	136-146	261-281	7-12	6-11	8.8-10.8	18-24	141-151	346-366	12-17	3-8	6.5-8.5	28-35
90	1.5	139-149	386-406	6-11	9-14	16.8-18.8	16-22	160-170	373-393	15-20	3-8	15.8-17.8	30-38
	2.25	139-149	370-390	6-11	7-12	12.5-14.5	16-22	167-177	380-400	16-21	3-8	12-14	31-39
	3	139-149	356-376	6-11	6-11	8.2-9.2	16-22	174-184	388-408	17-22	3-8	8.1-10.1	32-40
110	1.5	145-155	483-503	6-11	9-14	15.8-17.8	15-21						
	2.25	144-154	466-486	6-11	7-12	11.7-13.7	15-21						
	3	143-153	449-469	6-11	6-11	7.5-9.5	15-21						

*Based on 15% Methanol antifreeze solution

TR/TC018		Full Load Cooling - without HWG active						Full Load Heating - without HWG active					
Entering Water Temp °F	Water Flow GPM/ton	Suction Pressure PSIG	Discharge Pressure PSIG	Superheat	Subcooling	Water Temp Rise °F	Air Temp Drop °F DB	Suction Pressure PSIG	Discharge Pressure PSIG	Superheat	Subcooling	Water Temp Drop °F	Air Temp Rise °F DB
30*	1.5	122-132	171-191	15-20	14-19	22.5-24.5	20-28	70-80	272-292	4-9	2-6	7.4-9.4	18-24
	2.25	122-132	157-177	15-20	13-18	16.8-19.8	20-28	73-83	275-295	4-9	2-6	5.5-7.5	19-25
	3	122-132	145-165	15-20	13-18	11.2-13.2	20-28	77-87	278-298	4-9	2-6	3.5-5.5	19-25
50	1.5	136-146	198-218	10-15	14-19	22-24	19-25	101-111	302-322	8-13	3-7	10.3-12.3	23-29
	2.25	134-144	183-203	10-15	13-18	16.5-18.5	19-25	105-115	306-326	8-13	3-7	7.9-9.9	24-30
	3	133-143	171-191	11-16	13-18	11-13	19-25	109-119	311-331	8-13	3-7	5.5-7.5	25-31
70	1.5	139-149	293-313	6-10	14-19	19-21	18-24	130-140	329-349	10-15	4-9	13.6-15.6	27-33
	2.25	138-148	280-300	6-10	13-18	14.4-16.4	18-24	137-147	337-357	10-15	4-9	10.4-12.4	29-35
	3	137-147	267-287	7-11	13-18	9.8-11.7	18-24	139-149	342-362	10-15	4-9	7.2-9.2	30-36
90	1.5	142-152	389-409	5-10	17-22	16-18	17-23	160-170	360-380	13-18	5-10	17-19	33-41
	2.25	141-151	376-396	5-10	15-20	12.3-14.3	17-23	169-179	368-388	14-19	5-10	12.9-14.9	35-43
	3	140-150	363-383	5-10	13-18	8.5-10.5	17-23	178-188	376-396	14-19	4-9	8.8-10.8	36-44
110	1.5	148-158	486-506	5-10	17-22	14.9-16.9	16-22						
	2.25	147-157	472-492	5-10	15-20	11.4-13.4	16-22						
	3	146-156	458-478	5-10	13-18	7.8-9.8	16-22						

*Based on 15% Methanol antifreeze solution

TR/TC024		Full Load Cooling - without HWG active						Full Load Heating - without HWG active					
Entering Water Temp °F	Water Flow GPM/ton	Suction Pressure PSIG	Discharge Pressure PSIG	Superheat	Subcooling	Water Temp Rise °F	Air Temp Drop °F DB	Suction Pressure PSIG	Discharge Pressure PSIG	Superheat	Subcooling	Water Temp Drop °F	Air Temp Rise °F DB
30*	1.5	121-131	174-194	13-18	6-11	19.3-21.3	20-28	65-75	287-307	4-9	3-8	6.8-8.8	17-23
	2.25	120-130	165-185	13-18	5-10	14.5-16.5	20-28	68-78	290-310	5-10	3-8	5-7	18-24
	3	120-130	155-175	13-18	5-10	9.6-11.6	20-28	71-81	292-312	5-10	3-8	3.2-5.2	18-24
50	1.5	127-137	245-265	8-13	6-11	18.3-20.3	19-27	96-106	318-338	6-11	3-8	9.8-11.8	22-28
	2.25	128-138	231-251	8-13	7-12	13.7-15.7	19-27	101-111	322-342	7-12	3-8	7.2-9.2	23-29
	3	128-138	217-237	8-13	7-12	9.1-11.1	19-27	105-115	327-347	8-13	3-8	4.8-6.8	24-30
70	1.5	130-140	352-372	6-11	8-13	17.5-19.5	18-26	127-137	349-369	9-14	3-8	12.7-14.7	27-34
	2.25	130-140	334-354	6-11	9-14	26.2-28.2	18-26	132-142	353-373	9-14	3-8	9.5-11.5	28-35
	3	130-140	306-326	6-11	9-14	8.7-10.7	18-26	137-147	358-378	10-15	3-8	6.3-8.3	29-36
90	1.5	134-144	439-459	5-10	11-16	16.7-18.7	17-23	159-169	379-399	13-18	3-8	15.6-17.6	32-40
	2.25	133-143	416-436	5-10	12-17	12.5-14.5	17-23	164-174	384-404	14-19	3-8	11.7-13.7	33-41
	3	133-143	394-414	5-10	12-17	8.3-10.3	17-23	170-180	390-410	16-21	3-8	7.8-9.8	34-42
110	1.5	140-150	536-556	4-9	22-27	17.1-19.1	17-23						
	2.25	139-149	512-532	4-9	19-23	12.6-14.6	17-23						
	3	138-148	488-508	4-9	17-22	8-10	17-23						

*Based on 15% Methanol antifreeze solution

Table 13: TR/TC Series Typical Unit Operating Pressures and Temperatures: Continued

TR/TC030		Full Load Cooling - without HWG active						Full Load Heating - without HWG active					
Entering Water Temp °F	Water Flow GPM/ton	Suction Pressure PSIG	Discharge Pressure PSIG	Superheat	Subcooling	Water Temp Rise °F	Air Temp Drop °F DB	Suction Pressure PSIG	Discharge Pressure PSIG	Superheat	Subcooling	Water Temp Drop °F	Air Temp Rise °F DB
30*	1.5	113-123	188-208	14-19	14-19	19.5-21.5	18-26	67-77	322-342	8-13	15-20	6.9-8.9	17-25
	2.25	114-124	177-197	14-19	13-18	14.5-16.5	19-27	69-79	324-344	8-13	15-20	5.1-7.1	18-26
	3	114-124	166-186	14-19	13-18	9.5-11.5	19-27	71-81	326-346	8-13	15-20	3.3-5.3	18-26
50	1.5	124-134	248-268	11-16	14-19	18.7-20.7	18-26	95-105	346-366	10-15	15-20	9.8-11.8	23-31
	2.25	124-134	233-253	11-16	13-18	13.9-15.9	19-27	99-109	350-370	10-15	15-20	7.3-9.3	24-32
	3	124-134	218-238	11-16	13-18	9.1-11.1	19-27	103-113	355-375	11-16	15-20	4.8-6.8	25-33
70	1.5	132-142	333-353	9-14	13-18	17.5-19.5	18-26	125-135	376-396	13-18	14-19	12.7-14.7	27-35
	2.25	132-142	313-333	9-14	12-17	13-15	18-26	133-143	386-406	13-18	14-19	9.8-11.8	28-36
	3	132-142	293-313	9-14	12-17	8.5-10.5	18-26	136-146	393-413	13-18	14-19	6.4-8.4	30-38
90	1.5	135-145	431-451	7-12	17-22	16.5-18.5	17-25	155-165	415-435	15-20	13-18	15.6-18.6	33-41
	2.25	135-145	411-431	7-12	15-20	12.3-14.3	17-25	167-177	422-442	16-21	13-18	11.8-13.8	34-42
	3	135-145	391-411	7-12	13-18	8-10	17-25	170-180	430-450	17-22	13-18	7.9-9.9	36-44
110	1.5	140-150	528-548	6-11	17-22	16.2-18.2	16-24						
	2.25	140-150	506-526	7-12	15-20	11.9-13.9	16-24						
	3	139-149	485-505	7-12	13-18	7.6-9.6	16-24						

*Based on 15% Methanol antifreeze solution

TR/TC036		Full Load Cooling - without HWG active						Full Load Heating - without HWG active					
Entering Water Temp °F	Water Flow GPM/ton	Suction Pressure PSIG	Discharge Pressure PSIG	Superheat	Subcooling	Water Temp Rise °F	Air Temp Drop °F DB	Suction Pressure PSIG	Discharge Pressure PSIG	Superheat	Subcooling	Water Temp Drop °F	Air Temp Rise °F DB
30*	1.5	113-123	185-205	17-22	9-14	19.5-21.5	18-26	64-74	327-347	4-9	15-20	7.7-9.7	19-27
	2.25	113-123	174-194	17-22	8-13	14.5-16.5	19-27	66-76	331-351	4-9	15-20	5.7-7.7	19-27
	3	113-123	163-183	17-22	8-13	9.6-11.6	19-27	69-79	335-365	4-9	15-20	3.7-5.7	20-28
50	1.5	121-131	249-269	12-17	9-14	19.4-21.4	17-25	91-101	360-380	10-15	15-20	11.2-13.2	25-33
	2.25	120-130	231-251	12-17	8-13	14.4-16.4	18-26	96-106	370-390	9-14	16-21	8.2-10.2	26-34
	3	120-130	214-234	12-17	8-13	9.4-11.4	18-26	102-112	380-400	8-13	16-21	5.2-7.2	27-35
70	1.5	128-138	327-347	9-14	13-18	19.1-21.1	16-24	125-135	402-422	10-15	14-19	14.7-16.7	32-40
	2.25	128-138	304-324	9-14	11-16	14.1-16.1	17-25	132-142	413-433	10-15	14-19	11-13	33-41
	3	127-137	282-302	9-14	10-15	9.1-11.1	17-25	140-150	423-443	10-15	14-19	7.3-9.3	34-42
90	1.5	132-142	416-436	8-13	20-25	18.8-20.8	15-23	158-168	445-465	13-18	12-17	18.1-20.1	37-45
	2.25	132-142	396-416	8-13	18-23	13.9-15.9	16-24	167-177	456-476	13-18	11-16	13.8-15.8	38-46
	3	131-141	376-396	8-13	16-21	8.9-10.9	16-24	177-187	467-487	14-19	11-16	9.4-11.4	40-48
110	1.5	138-148	550-570	8-13	20-25	18.5-20.5	15-23						
	2.25	136-146	525-545	8-13	18-23	13.6-15.6	15-23						
	3	135-145	500-520	8-13	16-21	8.7-10.7	15-23						

*Based on 15% Methanol antifreeze solution

TR/TC042		Full Load Cooling - without HWG active						Full Load Heating - without HWG active					
Entering Water Temp °F	Water Flow GPM/ton	Suction Pressure PSIG	Discharge Pressure PSIG	Superheat	Subcooling	Water Temp Rise °F	Air Temp Drop °F DB	Suction Pressure PSIG	Discharge Pressure PSIG	Superheat	Subcooling	Water Temp Drop °F	Air Temp Rise °F DB
30*	1.5	115-125	174-194	12-17	10-15	19.8-21.8	16-24	66-76	314-334	6-11	11-16	7.3-9.3	18-26
	2.25	115-125	159-179	12-17	9-14	14.6-16.6	16-24	69-79	318-338	5-10	12-17	5.4-7.4	19-27
	3	115-125	144-164	12-17	9-14	9.5-11.5	16-24	72-82	321-341	4-9	12-17	3.4-5.4	19-27
50	1.5	123-133	233-253	9-14	10-15	19-21	16-24	97-107	354-374	9-14	13-18	10.2-12.2	24-32
	2.25	122-132	219-239	9-14	9-14	14-16	16-24	101-111	360-380	8-13	13-18	7.6-9.6	25-33
	3	122-132	205-225	9-14	9-14	9.1-11.1	16-24	106-116	365-385	6-11	13-18	5-7	26-34
70	1.5	128-138	309-329	6-11	12-17	18.3-20.3	16-24	130-140	394-414	7-12	13-18	13.3-15.3	30-38
	2.25	128-138	290-310	6-11	11-14	13.5-15.5	16-24	136-146	401-421	7-12	13-18	9.9-1.9	31-39
	3	128-138	271-291	6-11	11-14	8.7-10.7	16-24	143-153	409-429	8-13	13-18	6.6-8.6	32-40
90	1.5	133-143	406-426	5-10	14-19	17.6-19.6	16-24	164-174	434-454	10-15	12-17	16.4-18.4	37-45
	2.25	133-143	386-406	5-10	13-18	12.9-14.9	16-24	172-182	443-463	11-16	12-17	12.3-14.3	38-46
	3	132-142	367-387	5-10	13-18	8.3-10.3	16-24	180-190	453-473	11-16	12-17	8.3-10.3	39-47
110	1.5	138-148	505-525	5-10	19-24	16.8-18.8	16-24						
	2.25	138-148	484-504	5-10	16-21	12.4-14.4	16-24						
	3	138-148	463-483	5-10	14-19	7.9-9.9	16-24						

*Based on 15% Methanol antifreeze solution

Table 13: TR/TC Series Typical Unit Operating Pressures and Temperatures: Continued

TR/TC048		Full Load Cooling - without HWG active						Full Load Heating - without HWG active					
Entering Water Temp °F	Water Flow GPM/ton	Suction Pressure PSIG	Discharge Pressure PSIG	Superheat	Subcooling	Water Temp Rise °F	Air Temp Drop °F DB	Suction Pressure PSIG	Discharge Pressure PSIG	Superheat	Subcooling	Water Temp Drop °F	Air Temp Rise °F DB
30*	1.5	119-129	190-210	15-20	10-15	19.3-21.3	18-26	63-73	284-304	5-10	3-8	6.9-8.9	17-25
	2.25	119-129	179-199	15-20	9-14	14.6-16.6	19-27	66-76	288-308	6-10	3-8	5-7	18-26
	3	119-129	158-178	15-20	9-14	9.8-11.8	19-27	69-79	292-312	6-11	3-8	3.1-5.1	18-26
50	1.5	124-134	248-268	10-15	10-15	19-21	18-26	92-102	309-329	8-13	3-8	9.5-11.5	23-31
	2.25	123-133	230-250	10-15	9-14	14.3-16.3	19-27	96-106	313-333	9-14	3-8	7-9	24-32
	3	123-133	213-233	10-15	9-14	9.6-11.6	19-27	100-110	317-337	9-14	3-8	4.6-6.6	24-32
70	1.5	129-139	337-357	8-13	12-17	18.6-20.6	17-25	123-133	339-359	11-16	3-8	12.5-14.5	29-37
	2.25	129-139	328-348	8-13	11-16	14-16	18-26	128-138	344-364	11-16	3-8	9.3-11.3	29-37
	3	129-139	300-320	8-13	11-16	9.4-11.4	18-26	133-143	350-370	12-17	3-8	6.2-8.2	30-38
90	1.5	134-144	426-446	6-11	15-20	18.2-20.2	16-24	153-163	369-389	14-19	1-6	15.4-17.4	33-41
	2.25	134-144	406-426	6-11	15-20	13.7-15.7	17-25	160-170	376-396	15-20	1-6	11.6-13.6	35-43
	3	134-144	386-406	6-11	15-20	9.2-11.2	17-25	167-177	384-404	16-21	1-6	7.8-9.8	36-44
110	1.5	140-150	560-580	4-9	23-28	17.7-19.7	16-24						
	2.25	140-150	536-556	4-9	20-25	13.4-15.4	16-24						
	3	139-149	511-531	4-9	18-22	9-11	16-24						

*Based on 15% Methanol antifreeze solution

TR/TC060		Full Load Cooling - without HWG active						Full Load Heating - without HWG active					
Entering Water Temp °F	Water Flow GPM/ton	Suction Pressure PSIG	Discharge Pressure PSIG	Superheat	Subcooling	Water Temp Rise °F	Air Temp Drop °F DB	Suction Pressure PSIG	Discharge Pressure PSIG	Superheat	Subcooling	Water Temp Drop °F	Air Temp Rise °F DB
30*	1.5	108-118	180-200	16-21	10-15	20.6	19-27	61-71	314-334	6-11	14-19	7.6-9.6	19-27
	2.25	108-118	165-185	16-21	9-14	15.2-17.2	20-28	64-74	317-337	7-12	13-18	5.6-7.6	20-28
	3	108-118	150-170	16-21	9-14	9.7-11.7	20-28	66-76	319-339	7-12	13-18	3.6-5.6	20-28
50	1.5	113-123	206-226	11-14	10-15	19.8-21.8	18-26	90-100	350-370	11-16	14-19	10.5-12.5	25-33
	2.25	113-123	190-210	11-14	9-14	14.5-16.5	19-27	95-105	357-377	11-16	14-19	7.9-9.9	27-35
	3	113-123	173-193	11-14	9-14	9.3-11.3	19-27	99-109	364-384	10-15	14-19	5.2-7.2	28-36
70	1.5	119-129	305-325	9-14	12-17	18.8-20.8	17-25	123-133	391-411	12-17	14-19	13.7-15.7	33-41
	2.25	118-128	287-307	9-14	11-14	13.8-15.8	18-26	129-139	399-419	12-17	14-19	10.3-12.3	34-42
	3	118-128	269-289	9-14	11-14	8.8-10.8	18-26	135-145	407-427	13-18	14-19	6.9-8.9	35-43
90	1.5	124-134	402-422	7-12	14-19	17.8-19.8	16-24	157-167	431-451	13-18	13-18	16.8-18.8	38-46
	2.25	124-134	382-402	7-12	13-18	13.1-15.1	17-25	164-184	440-460	14-19	13-18	12.7-14.7	39-47
	3	123-133	363-383	7-12	13-18	8.3-10.3	17-25	172-182	450-470	16-21	12-17	8.6-10.6	41-49
110	1.5	130-140	500-520	7-12	20-25	17-19	16-24						
	2.25	129-139	479-499	6-11	16-21	12.4-14.4	16-24						
	3	128-138	458-478	5-10	13-18	7.8-9.8	16-24						

*Based on 15% Methanol antifreeze solution

Table 14: Water Temperature Change Through Heat Exchanger

Water Flow, gpm [l/m]	Rise, Cooling °F, [°C]	Drop, Heating °F, [°C]
For Closed Loop: Ground Source or Closed Loop Systems at 3 gpm per ton [3.2 l/m per kW]	9 - 12 [5 - 6.7]	4 - 8 [2.2 - 4.4]
For Open Loop: Ground Water Systems at 1.5 gpm per ton [1.6 l/m per kW]	20 - 26 [11.1 - 14.4]	10 - 17 [5.6 - 9.4]

Preventive Maintenance

Water Coil Maintenance - (Direct ground water applications only) If the system is installed in an area with a known high mineral content (125 P.P.M. or greater) in the water, it is best to establish a periodic maintenance schedule with the owner so the coil can be checked regularly. Consult the well water applications section of this manual for a more detailed water coil material selection. Should periodic coil cleaning be necessary, use standard coil cleaning procedures, which are compatible with the heat exchanger material and copper water lines. Generally, the more water flowing through the unit, the less chance for scaling. Therefore, 1.5 gpm per ton [1.6 l/m per kW] is recommended as a minimum flow. Minimum flow rate for entering water temperatures below 50°F [10°C] is 2.0 gpm per ton [2.2 l/m per kW].

Water Coil Maintenance - (All other water loop applications) Generally water coil maintenance is not needed for closed loop systems. However, if the piping is known to have high dirt or debris content, it is best to establish a periodic maintenance schedule with the owner so the water coil can be checked regularly. Dirty installations are typically the result of deterioration of iron or galvanized piping or components in the system. Open cooling towers requiring heavy chemical treatment and mineral buildup through water use can also contribute to higher maintenance. Should periodic coil cleaning be necessary, use standard coil cleaning procedures, which are compatible with both the heat exchanger material and copper water lines. Generally, the more water flowing through the unit, the less chance for scaling. However, flow rates over 3 gpm per ton (3.9 l/m per kW) can produce water (or debris) velocities that can erode the heat exchanger wall and ultimately produce leaks.

Hot Water Generator Coils - See water coil maintenance for ground water units. If the potable water is hard or not chemically softened, the high temperatures of the desuperheater will tend to scale even quicker than the water coil and may need more frequent inspections. In areas with extremely hard water, a HWG is not recommended.

Filters - Filters must be clean to obtain maximum performance. Filters should be inspected every month under normal operating conditions and be replaced when necessary. Units should never be operated without a filter.

Washable, high efficiency, electrostatic filters, when dirty, can exhibit a very high pressure drop for the fan motor and reduce air flow, resulting in poor performance. It is especially important to provide consistent washing of these filters (in the opposite direction of the normal air flow) once per month using a high pressure wash similar to those found at self-serve car washes.

Condensate Drain - In areas where airborne bacteria may produce a "slimy" substance in the drain pan, it may be necessary to treat the drain pan chemically with an algaecide approximately every three months to minimize the problem. The condensate pan may also need to be cleaned periodically to ensure indoor air quality. The condensate drain can pick up lint and dirt, especially with dirty filters. Inspect the drain twice a year to avoid the possibility of plugging and eventual overflow.

Compressor - Conduct annual amperage checks to ensure that amp draw is no more than 10% greater than indicated on the serial plate data.

Fan Motors - All units have lubricated fan motors. Fan motors should never be lubricated unless obvious, dry operation is suspected. Periodic maintenance oiling is not recommended, as it will result in dirt accumulating in the excess oil and cause eventual motor failure. Conduct annual dry operation check and amperage check to ensure amp draw is no more than 10% greater than indicated on serial plate data.

Air Coil - The air coil must be cleaned to obtain maximum performance. Check once a year under normal operating conditions and, if dirty, brush or vacuum clean. Care must be taken not to damage the aluminum fins while cleaning. CAUTION: Fin edges are sharp.

Cabinet - Do not allow water to stay in contact with the cabinet for long periods of time to prevent corrosion of the cabinet sheet metal. Generally, vertical cabinets are set up from the floor a few inches [7 - 8 cm] to prevent water from entering the cabinet. The cabinet can be cleaned using a mild detergent.

Refrigerant System - To maintain sealed circuit integrity, do not install service gauges unless unit operation appears abnormal. Reference the operating charts for pressures and temperatures. Verify that air and water flow rates are at proper levels before servicing the refrigerant circuit.

Functional Troubleshooting

Fault	Htg	Clg	Possible Cause	Solution
Main power problems	X	X	Green Status LED Off	Check line voltage circuit breaker and disconnect.
				Check for line voltage between L1 and L2 on the contactor.
				Check for 24VAC between R and C on CXM/DXM'
				Check primary/secondary voltage on transformer.
HP Fault Code 2 High Pressure		X	Reduced or no water flow in cooling	Check pump operation or valve operation/setting.
				Check water flow adjust to proper flow rate.
		X	Water Temperature out of range in cooling	Bring water temp within design parameters.
	X		Reduced or no air flow in heating	Check for dirty air filter and clean or replace.
				Check fan motor operation and airflow restrictions.
				Dirty Air Coil- construction dust etc.
				Too high of external static. Check static vs blower table.
	X		Air temperature out of range in heating	Bring return air temp within design parameters.
	X	X	Overcharged with refrigerant	Check superheat/subcooling vs typical operating condition table.
	X	X	Bad HP Switch	Check switch continuity and operation. Replace.
LP/LOC Fault Code 3 Low Pressure / Loss of Charge	X	X	Insufficient charge	Check for refrigerant leaks
	X		Compressor pump down at start-up	Check charge and start-up water flow.
FP1 Fault Code 4 Water coil low temperature limit	X		Reduced or no water flow in heating	Check pump operation or water valve operation/setting.
				Plugged strainer or filter. Clean or replace..
				Check water flow adjust to proper flow rate.
	X		Inadequate antifreeze level	Check antifreeze density with hydrometer.
	X		Improper temperature limit setting (30°F vs 10°F [-1°C vs -2°C])	Clip JW3 jumper for antifreeze (10°F [-12°C]) use.
	X		Water Temperature out of range	Bring water temp within design parameters.
	X	X	Bad thermistor	Check temp and impedance correlation per chart
FP1 Fault Code 5 Air coil low temperature limit		X	Reduced or no air flow in cooling	Check for dirty air filter and clean or replace.
				Check fan motor operation and airflow restrictions.
				Too high of external static. Check static vs blower table.
		X	Air Temperature out of range	Too much cold vent air? Bring entering air temp within design parameters.
		X	Improper temperature limit setting (30°F vs 10°F [-1°C vs -12°C])	Normal airside applications will require 30°F [-1°C] only.
	X	X	Bad thermistor	Check temp and impedance correlation per chart.
Condensate Fault Code 6	X	X	Blocked drain	Check for blockage and clean drain.
	X	X	Improper trap	Check trap dimensions and location ahead of vent.
		X	Poor drainage	Check for piping slope away from unit.
				Check slope of unit toward outlet.
				Poor venting. Check vent location.
		X	Moisture on sensor	Check for moisture shorting to air coil.
	X	X	Plugged air filter	Replace air filter.
	x	X	Restricted Return Air Flow	Find and eliminate restriction. Increase return duct and/or grille size.
Over/Under Voltage Code 7 (Auto resetting)	X	X	Under Voltage	Check power supply and 24VAC voltage before and during operation.
				Check power supply wire size.
				Check compressor starting. Need hard start kit?
				Check 24VAC and unit transformer tap for correct power supply voltage.
	X	X	Over Voltage	Check power supply voltage and 24VAC before and during operation.
				Check 24VAC and unit transformer tap for correct power supply voltage.
Unit Performance Sentinel Code 8	X		Heating mode FP2>125°F [52°C]	Check for poor air flow or overcharged unit.
		X	Cooling Mode FP1>125°F [52°C] OR FP2< 40ºF [4ºC])	Check for poor water flow, or air flow.
No Fault Code Shown	X	X	No compressor operation	See "Only Fan Operates".
	X	X	Compressor overload	Check and replace if necessary.
	X	X	Control board	Reset power and check operation.
Unit Short Cycles	X	X	Dirty air filter	Check and clean air filter.
	X	X	Unit in "test mode"	Reset power or wait 20 minutes for auto exit.
	X	X	Unit selection	Unit may be oversized for space. Check sizing for actual load of space.
	X	X	Compressor overload	Check and replace if necessary
Only Fan Runs	X	X	Thermostat position	Ensure thermostat set for heating or cooling operation.
	X	X	Unit locked out	Check for lockout codes. Reset power.
	X	X	Compressor Overload	Check compressor overload. Replace if necessary.
	X	X	Thermostat wiring	Check thermostat wiring at heat pump. Jumper Y and R for compressor operation in test mode.

Table Continued on Next Page

Only Compressor Runs	X	X	Thermostat wiring	Check G wiring at heat pump. Jumper G and R for fan operation
	X	X	Fan motor relay	Jumper G and R for fan operation. Check for Line voltage across BR contacts.
	X	X		Check fan power enable relay operation (if present).
	X	X	Fan motor	Check for line voltage at motor. Check capacitor.
	X	X	Thermostat wiring	Check thermostat wiring at heat pump. Jumper Y and R for compressor operation in test mode
Unit Doesn't Operate in Cooling		X	Reversing valve	Set for cooling demand and check 24VAC on RV coil and at CXM/DXM board.
				If RV is stuck, run high pressure up by reducing water flow and while operating engage and disengage RV coil voltage to push valve.
		X	Thermostat setup	Check for 'O' RV setup not 'B'.
		X	Thermostat wiring	Check O wiring at heat pump. Jumper O and R for RV coil 'click'.
		X	Thermostat wiring	Put thermostat in cooling mode. Check 24 VAC on O (check between C and O); check for 24 VAC on W (check between W and C). There should be voltage on O, but not on W. If voltage is present on W, thermostat may be bad or wired incorrectly.

Performance Troubleshooting

Performance Troubleshooting	Htg	Clg	Possible Cause	Solution
Insufficient capacity/ Not cooling or heating	X	X	Dirty filter	Replace or clean.
	X		Reduced or no air flow in heating	Check for dirty air filter and clean or replace.
				Check fan motor operation and airflow restrictions.
				Too high of external static. Check static vs. blower table.
		X	Reduced or no air flow in cooling	Check for dirty air filter and clean or replace.
				Check fan motor operation and airflow restrictions.
				Too high of external static. Check static vs. blower table.
	X	X	Leaky duct work	Check supply and return air temperatures at the unit and at distant duct registers if significantly different, duct leaks are present.
	X	X	Low refrigerant charge	Check superheat and subcooling per chart.
	X	X	Restricted metering device	Check superheat and subcooling per chart. Replace.
		X	Defective reversing valve	Perform RV touch test.
	X	X	Thermostat improperly located	Check location and for air drafts behind stat.
	X	X	Unit undersized	Recheck loads & sizing. Check sensible clg. load and heat pump capacity.
	X	X	Scaling in water heat exchanger	Perform scaling check and clean if necessary.
	X	X	Inlet water too hot or too cold	Check load, loop sizing, loop backfill, ground moisture.
High Head Pressure	X		Reduced or no air flow in heating	Check for dirty air filter and clean or replace.
				Check fan motor operation and air flow restrictions.
				Too high of external static. Check static vs. blower table.
		X	Reduced or no water flow in cooling	Check pump operation or valve operation/setting.
				Check water flow. Adjust to proper flow rate.
		X	Inlet water too hot	Check load, loop sizing, loop backfill, ground moisture.
	X		Air temperature out of range in heating	Bring return air temperature within design parameters.
		X	Scaling in water heat exchanger	Perform scaling check and clean if necessary.
	X	X	Unit overcharged	Check superheat and subcooling. Re-weigh in charge.
	X	X	Non-condensables in system	Vacuum system and re-weigh in charge.
	X	X	Restricted metering device.	Check superheat and subcooling per chart. Replace.
Low Suction Pressure	X		Reduced water flow in heating.	Check pump operation or water valve operation/setting.
				Plugged strainer or filter. Clean or replace.
				Check water flow. Adjust to proper flow rate.
	X		Water temperature out of range.	Bring water temperature within design parameters.
		X	Reduced air flow in cooling.	Check for dirty air filter and clean or replace.
				Check fan motor operation and air flow restrictions.
				Too high of external static. Check static vs. blower table.
		X	Air temperature out of range	Too much cold vent air? Bring entering air temperature within design parameters.
	X	X	Insufficient charge	Check for refrigerant leaks.
Low Discharge Air Temperature in Heating	X		Too high of air flow	Check fan motor speed selection and air flow chart.
	X		Poor performance	See 'Insufficient Capacity'
High humidity		X	Too high of air flow	Check fan motor speed selection and airflow chart.
		X	Unit oversized	Recheck loads & sizing. Check sensible clg load and heat pump capacity.

Start-Up Log Sheet

Installer: Complete unit and system checkout and follow unit start-up procedures in the IOM. Use this form to record unit information, temperatures and pressures during start-up. Keep this form for future reference.

Job Name: _____ **Street Address:** _____

Model Number: _____ **Serial Number:** _____

Unit Location in Building: _____

Date: _____ **Sales Order No:** _____

In order to minimize troubleshooting and costly system failures, complete the following checks and data entries before the system is put into full operation.

Fan Motor: Speed Tap (PSC) or CFM Settings (ECM)_____

Temperatures: F or C **Antifreeze:** _____%

Pressures: PSIG or kPa **Type** _____

	Cooling Mode		Heating Mode
Entering Fluid Temperature			
Leaving Fluid Temperature			
Temperature Differential			
Return-Air Temperature	DB	WB	DB
Supply-Air Temperature	DB	WB	DB
Temperature Differential			
Water Coil Heat Exchanger (Water Pressure IN)			
Water Coil Heat Exchanger (Water Pressure OUT)			
Pressure Differential			
Water Flow GPM			
Compressor			
Amps			
Volts			
Discharge Line Temperature			
Motor			
Amps			
Volts			

Allow unit to run 15 minutes in each mode before taking data.

Do not connect gauge lines

Functional Troubleshooting

HEATING CYCLE ANALYSIS -

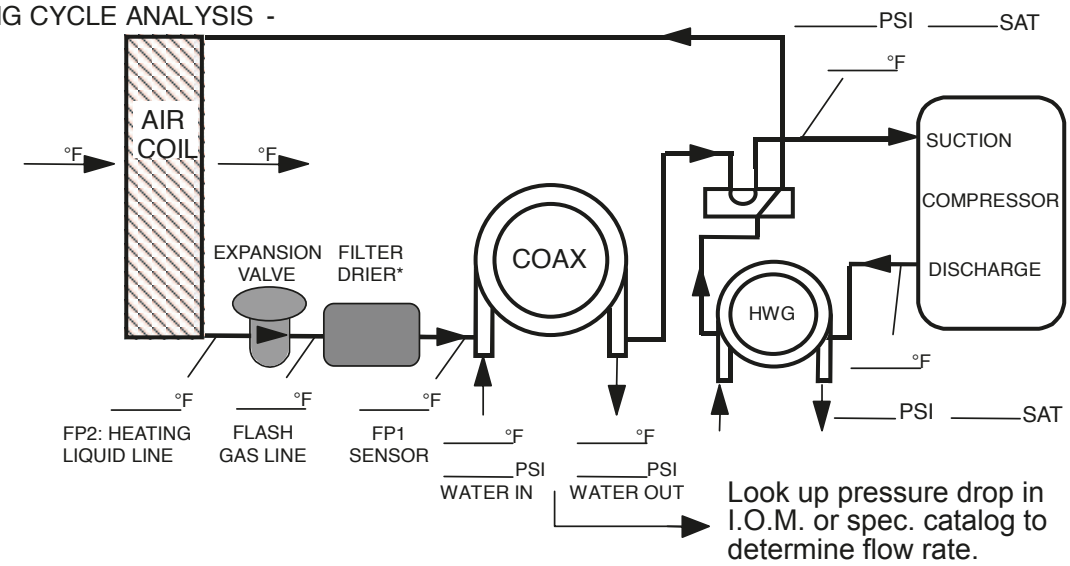

COOLING CYCLE ANALYSIS -

Refrigerant Type:

HFC-410A

Voltage: _____

Comp Amps: _____

Total Amps: _____

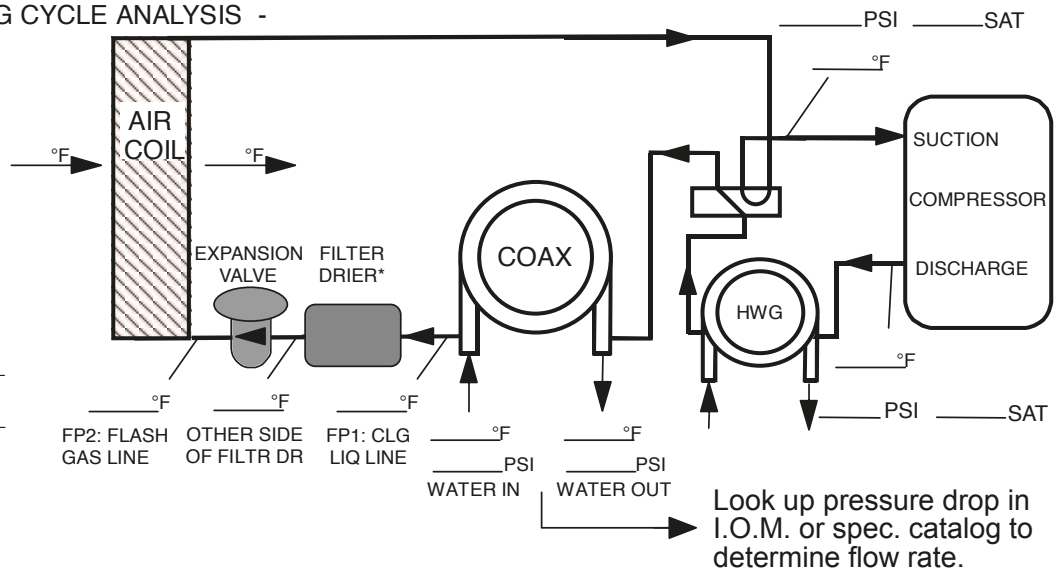

Heat of Extraction (Absorption) or Heat of Rejection =

_____ flow rate (gpm) x _____ temp.diff. (deg. F) x _____ fluid factor† = _____ (Btu/hr)

Superheat = Suction temperature - suction saturation temp. = _____ (deg F)

Subcooling = Discharge saturation temp. - liquid line temp. = _____ (deg F)

† Use 500 for water, 485 for antifreeze.

Note: Never connect refrigerant gauges during startup procedures. Conduct water-side analysis using P/T ports to determine water flow and temperature difference. If water-side analysis shows poor performance, refrigerant troubleshooting may be required. Connect refrigerant gauges as a last resort.

Warranty (U.S. & Canada)

CLIMATEMASTER
Geothermal Heat Pump Systems

CLIMATE MASTER, INC.
LIMITED EXPRESS WARRANTY/ LIMITATION OF REMEDIES AND LIABILITY

It is expressly understood that unless a statement is specifically identified as a warranty, statements made by Climate Master, Inc., a Delaware corporation, ("CM") or its representatives, relating to CM's products, whether oral, written or contained in any sales literature, catalog or any other agreement, are not express warranties and do not form a part of the basis of the bargain, but are merely CM's opinion or commendation of CM's products.

EXCEPT AS SPECIFICALLY SET FORTH HEREIN, THERE IS NO EXPRESS WARRANTY AS TO ANY OF CM'S PRODUCTS. CM MAKES NO WARRANTY AGAINST LATENT DEFECTS. CM MAKES NO WARRANTY OF MERCHANTABILITY OF THE GOODS OR OF THE FITNESS OF THE GOODS FOR ANY PARTICULAR PURPOSE.

GRANT OF LIMITED EXPRESS WARRANTY
CM warrants CM products purchased and retained in the United States of America and Canada to be free from defects in material and workmanship under normal use and maintenance as follows: (1) All complete air conditioning, heating and/or heat pump units built or sold by CM for twelve (12) months from date of unit start up or eighteen (18) months from date of shipment (from factory), whichever comes first; (2) Repair and replacement parts, which are not supplied under warranty, for nintey (90) days from date of shipment (from factory). All parts must be returned to CM's factory in Oklahoma City, Oklahoma, freight prepaid, no later than sixty (60) days after the date of the failure of the part; if CM determines the part to be defective and within CM's Limited Express Warranty, CM shall, when such part has been either replaced or repaired, return such to a factory recognized dealer, contractor or service organization, F.O.B. CM's factory, Oklahoma City, Oklahoma, freight prepaid. The warranty on any parts repaired or replaced under warranty expires at the end of the original warranty period.

This warranty does not cover and does not apply to: (1) Air filters, fuses, refrigerant, fluids, oil; (2) Products relocated after initial installation; (3) Any portion or component of any system that is not supplied by CM, regardless of the cause of the failure of such portion or component; (4) Products on which the unit identification tags or labels have been removed or defaced; (5) Products on which payment to CM is or has been in default; (6) Products which have defects or damage which result from improper installation, wiring, electrical imbalance characteristics or maintenance; or are caused by accident, misuse or abuse, fire, flood, alteration or misapplication of the product; (7) Products which have defects or damage which result from a contaminated or corrosive air or liquid supply, operation at abnormal temperatures, or unauthorized opening of refrigerant circuit; (8) Mold, fungus or bacteria damages; (9) Products subjected to corrosion or abrasion; (10) Products manufactured or supplied by others; (11) Products which have been subjected to misuse, negligence or accidents; (12) Products which have been operated in a manner contrary to CM's printed instructions; or (13) Products which have defects, damage or insufficient performance as a result of insufficient or incorrect system design or the improper application of CM's products.

CM is not responsible for: (1) The costs of any fluids, refrigerant or other system components, or associated labor to repair or replace the same, which is incurred as a result of a defective part covered by CM's Limited Express Warranty; (2) The costs of labor, refrigerant, materials or service incurred in removal of the defective part, or in obtaining and replacing the new or repaired part; or, (3) Transportation costs of the defective part from the installation site to CM or of the return of any part not covered by CM's Limited Express Warranty.

Limitation: This Limited Express Warranty is given in lieu of all other warranties. If, notwithstanding the disclaimers contained herein, it is determined that other warranties exist, any such warranties, including without limitation any express warranties or any implied warranties of fitness for particular purpose and merchantability, shall be limited to the duration of the Limited Express Warranty.

LIMITATION OF REMEDIES
In the event of a breach of the Limited Express Warranty, CM will only be obligated at CM's option to repair the failed part or unit or to furnish a new or rebuilt part or unit in exchange for the part or unit which has failed. If after written notice to CM's factory in Oklahoma City, Oklahoma of each defect, malfunction or other failure and a reasonable number of attempts by CM to correct the defect, malfunction or other failure and the remedy fails of its essential purpose, CM shall refund the purchase price paid to CM in exchange for the return of the sold good(s). Said refund shall be the maximum liability of CM. **THIS REMEDY IS THE SOLE AND EXCLUSIVE REMEDY OF THE BUYER OR THEIR PURCHASER AGAINST CM FOR BREACH OF CONTRACT, FOR THE BREACH OF ANY WARRANTY OR FOR CM'S NEGLIGENCE OR IN STRICT LIABILITY.**

LIMITATION OF LIABILITY
CM shall have no liability for any damages if CM's performance is delayed for any reason or is prevented to any extent by any event such as, but not limited to: any war, civil unrest, government restrictions or restraints, strikes or work stoppages, fire, flood, accident, shortages of transportation, fuel, material, or labor, acts of God or any other reason beyond the sole control of CM. **CM EXPRESSLY DISCLAIMS AND EXCLUDES ANY LIABILITY FOR CONSEQUENTIAL OR INCIDENTAL DAMAGE IN CONTRACT, FOR BREACH OF ANY EXPRESS OR IMPLIED WARRANTY, OR IN TORT, WHETHER FOR CM's NEGLIGENCE OR AS STRICT LIABILITY.**

OBTAINING WARRANTY PERFORMANCE
Normally, the contractor or service organization who installed the products will provide warranty performance for the owner. Should the installer be unavailable, contact any CM recognized dealer, contractor or service organization. If assistance is required in obtaining warranty performance, write or call:

Climate Master, Inc. • Customer Service • 7300 S.W. 44th Street • Oklahoma City, Oklahoma 73179 (405) 745-6000

NOTE: Some states or Canadian provinces do not allow limitations on how long an implied warranty lasts, or the limitation or exclusions of consequential or incidental damages, so the foregoing exclusions and limitations may not apply to you. This warranty gives you specific legal rights, and you may also have other rights which vary from state to state and from Canadian province to Canadian province.

Please refer to the CM Installation, Operation and Maintenance Manual for operating and maintenance instructions.

Rev.: 11/09

LC083

Notes:

Revision History

Date:	Item:	Action:
01/03/11	Format - All Pages	Updated
09/29/10	TT, TS ECM Electrical Data	Updated
09/23/10	Start-Up Log Sheet	Added
09/03/10	ECM Blower Control	Updated
07/26/10	Wiring Diagrams	Updated
07/07/10	Pre-Installation	Updated
06/11/10	Format - All Pages	Updated
05/14/10	TR Information and Formatting	Updated
02/12/10	TR Information	Updated
11/5/09	Warranty	Updated
10/30/09	Functional Troubleshooting Table	Updated
10/21/09	Blower Performance Data Tables	Added
09/15/09	Safety Features - CXM/DXM Control Section	Updated
08/12/09	TR Information	Added
05/1/09	First Published	

ISO 9001:2000 Certified
Quality: First & Always

97B0075N01

CLIMATEMASTER®
Water-Source Heat Pump Systems
7300 S.W. 44th Street
Oklahoma City, OK 73179
Phone: 405-745-6000
Fax: 405-745-6058
climatemaster.com

Rev.: 03 January, 2011