YMP/90-14

U.S. DEPARTMENT OF ENERGY

OCRWM

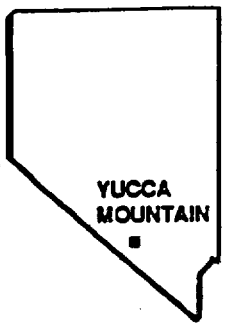

YUCCA MOUNTAIN PROJECT

TECHNICAL SUPPORT DOCUMENTATION MANAGEMENT PLAN

UNCONTROLLED

MARCH 1990

UNITED STATES DEPARTMENT OF ENERGY
NEVADA OPERATIONS OFFICE/YUCCA MOUNTAIN PROJECT OFFICE

9105280120 910430
PDR WASTE
WM-11 PDR

YMP-90-14

YUCCA MOUNTAIN PROJECT

TECHNICAL SUPPORT DOCUMENTATION MANAGEMENT PLAN

MARCH 1990

Prepared by

U.S. Department of Energy
Yucca Mountain Project Office

Prepared for the Yucca Mountain Project as part of the Civilian Radioactive Waste Management Program. The Yucca Mountain Project is managed by the Yucca Mountain Project Office of the U.S. Department of Energy. Yucca Mountain Project work is sponsored by the DOE Office of Civilian Radioactive Waste Management.

YUCCA MOUNTAIN PROJECT

TECHNICAL SUPPORT DOCUMENTATION MANAGEMENT PLAN

Submitted by:

Maxwell Blanchard 3-15-90

Maxwell B. Blanchard, Director
Regulatory and Site Evaluation Division
Yucca Mountain Project Office

Approved by:

APPROVAL OF THIS DOCUMENT IS CONTINGENT UPON VERIFICATION THAT UPPER TIER DOCUMENT REQUIREMENTS ARE INCORPORATED WHEN THEY ARE ISSUED

3-16-90

Donald G. Horton, Director
Quality Assurance Division
Yucca Mountain Project Office

9/10/90

Carl P. Gertz, Project Manager
Yucca Mountain Project Office

TECHNICAL SUPPORT DOCUMENTATION MANAGEMENT PLAN

FOR

YUCCA MOUNTAIN PROJECT

TABLE OF CONTENTS

		Page
1.0	INTRODUCTION.	1-1
	1.1 Purpose.	1-1
	1.2 Applicability.	1-1
2.0	DESCRIPTION OF TECHNICAL DOCUMENTATION SUPPORT MANAGEMENT	2-1
	2.1 Acquired Information	2-1
	2.2 Technical Reports.	2-3
	2.3 Licensing Documents.	2-3
	2.4 Other Licensing Products	2-3
	2.4.1 Issue Resolution Reports.	2-3
	2.4.2 Working Papers.	2-4
3.0	WORK PLAN FOR THE DEVELOPMENT OF TECHNICAL SUPPORT DOCUMENTATION.	3-1
	3.1 Work Flow: Acquired Information	3-4
	3.2 Work Flow: Technical Reports.	3-4
	3.3 Work Flow: Licensing Documents.	3-6
	3.4 Work Flow: Other Licensing Products	3-7
4.0	REQUIREMENTS FOR TECHNICAL SUPPORT DOCUMENTATION MANAGEMENT . . .	4-1
REFERENCES.		R-1
APPENDIX A: LICENSE APPLICATION GUIDE.		A-1

LIST OF FIGURES

Figure	Title	Page
1-1	Simplified data and information flow, technical support documentation process.	1-2
2-1	Planning and implementation of the technical support document management process	2-2
3-1	Technical support documentation sequence and orientation of WBS elements in support of LA/SAR development.	3-2
3-2	Preparatory activities for implementation of technical support documentation management process	3-3
3-3	Technical Support Documentation Management Plan work plan flowchart.	3-5

EXECUTIVE SUMMARY

Technical support documentation is the collective name given to (1) the information developed by the Department of Energy during the characterization, design, and evaluation of the Yucca Mountain Mined Geologic Disposal System (MGDS), (2) the technical reports written to compile and interpret the information, (3) the licensing documents prepared for presentation to the Nuclear Regulatory Commission, and (4) any specific backup documentation needed to supplement the above. These are support documentation because they are the core of the demonstration of regulatory compliance needed to apply for a license for the Yucca Mountain MGDS, in the event that is the action dictated by the results of site characterization.

The Technical Support Documentation Management Plan (TSDMP) identifies and defines the use of technical support documentation developed by site characterization, design, and performance assessment activities. With detailed preplanning, the TSDMP process develops technical support documentation (TSD) sequences that graphically depict the logic paths for each element of information gathered. Ties are shown in the TSD sequence from the initiation of the information, through any technical reports in which that information will be involved, and to the location (or locations) in the license application where the information is required.

The Yucca Mountain Project Office has the responsibility of administering the TSDMP. Project participants perform the characterization, design, and performance assessment activities, handling documentation in accordance with their established procedures. The Technical and Management Support Services contractor provides the usual support and integrative role but, in addition, provides extra regulatory support in implementing the plan.

The TSDMP provides guidance for developing the format of TSD entities, such as the technical reports and licensing documents. Review and acceptance procedures for the formats and the final documents are specified.

This management plan ensures that the necessary links among information are established and that the documentation produced is sufficient for licensing.

1.0 INTRODUCTION

This Technical Support Documentation Management Plan (TSDMP) is identified as a requirement by the Mined Geologic Disposal System (MGDS) Regulatory Compliance Plan (RCP).

Guidance for preparation of this document was provided in the manual, "Yucca Mountain Project Plans/Procedures Description and Author Guidance" (Guidance). Tab 4 of the Guidance contains a general, flexible format for use with plans, and Tab 6 provides a draft procedure including criteria for acceptance of plans.

Compliance with regulatory criteria will be demonstrated using a variety of means, ranging from routine data collection to complex computer analyses. The range of technical information will be presented in two documentation categories: acquired information and technical reports. As this information is integrated and oriented toward regulatory compliance, licensing documents are produced. These documents are tailored for direct incorporation into the license application.

The flow of information from technical to licensing is depicted in a simplified form in Figure 1-1. In practice, the production of a licensing document generally will depend upon the collection of much information and the completion of many technical reports. The TSDMP ensures that the necessary links among information are established and that the documentation produced is sufficient for licensing.

1.1 PURPOSE

The TSDMP provides the management system and identifies the accompanying processes and procedures that guide the creation of a comprehensive collection of technical documentation for use in the demonstration of regulatory compliance. The goals of the Office of Civilian Radioactive Waste Management (OCRWM) are to license, build, and operate the MGDS. The formulation and presentation of technical information acquired from site characterization, design, and performance assessment activities are critical to OCRWM's ability to demonstrate compliance with licensing and other regulatory requirements. This TSDMP contains the Project Office guidance necessary to accomplish that task.

1.2 APPLICABILITY

This document applies to the following activities, materials, persons, and organizations:

1. The data or information derived from the activities associated with site characterization, design, and performance assessment that have been controlled in accordance with the Technical Data Management Plan (TDMP).

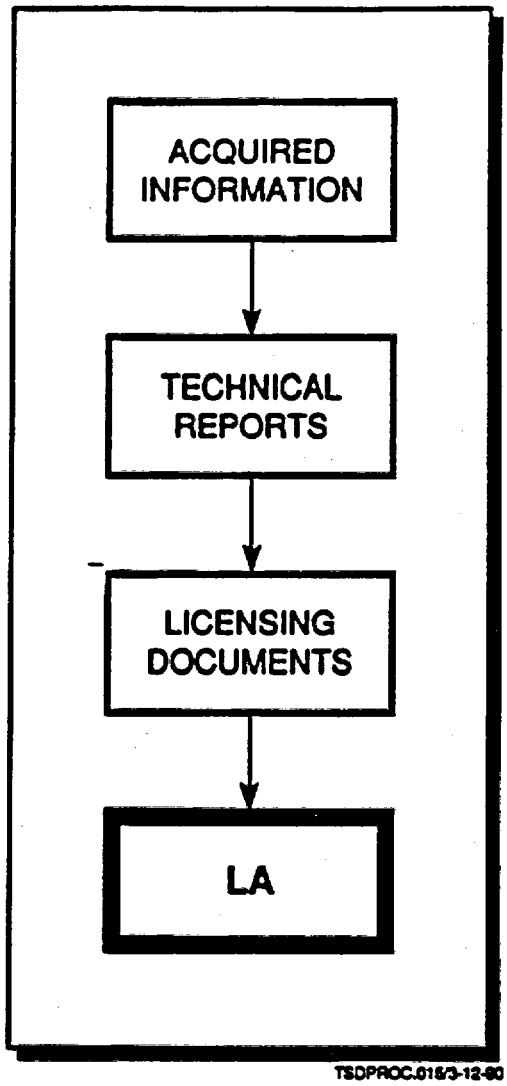

Figure 1-1. Simplified data and information flow, technical support documentation process.

2. All additional technical information documentation derived by analytical, interpretive, or other means from site characterization, design, and performance assessment activities.

3. All of the Yucca Mountain Project Office (Project Office) staff and Project participants who prepare, review, accept, and approve such documentation.

2.0 DESCRIPTION OF TECHNICAL SUPPORT DOCUMENTATION

The management process for technical support documents is designed to support the development of the License Application (LA) (which includes the Safety Analysis Report), in easily manageable segments, from a multi-disciplinary set of activities that produce information about the proposed site. These activities include data and information collection via field tests, laboratory work, and geotechnical modeling, and the interpretation of that information; the development of designs for the mined geologic disposal system; and mathematical modeling to predict expected performance of the repository during the performance lifetime of 10,000 years.

The objective of technical support documentation is to provide the means of identifying and tracing the development of conclusions needed to demonstrate the compliance of each LA subsection with the regulations. The documentation considered in this process is the set of information, reports, and interpretations that provide supporting evidence for the conclusions.

Figure 2-1 depicts a simplified view of the relationship of these plans to the technical support documentation (TSD) sequence. Development of technical support documentation is an essential element of overall program planning. The logic defined during the development of technical plans is assimilated with the requirements for the LA to produce TSD sequences, or logic structures, for each LA subsection. These TSD sequences identify the acquired information, technical reports, and licensing documents required to develop an individual LA subsection. Additional licensing products, the Issue Resolution Report (IRR), and the working paper are related to the TSD sequence but cover a broader range of subject matter. The latter two licensing products are not depicted in Figure 2-1, but are defined below, along with the three principal forms of technical support documentation.

2.1 ACQUIRED INFORMATION

Acquired information is raw, reduced, and interpreted data from testing programs that has been developed in accordance with planning requirements specified in the Test and Evaluation Plan (T&EP) and its associated study plans. All acquired information shall have a specified location or locations for reference in the LA (if this is not the case, it is an indication that the information is not necessary and should not be collected). The control of acquired information is specified in the Technical Data Management Plan (TDMP).

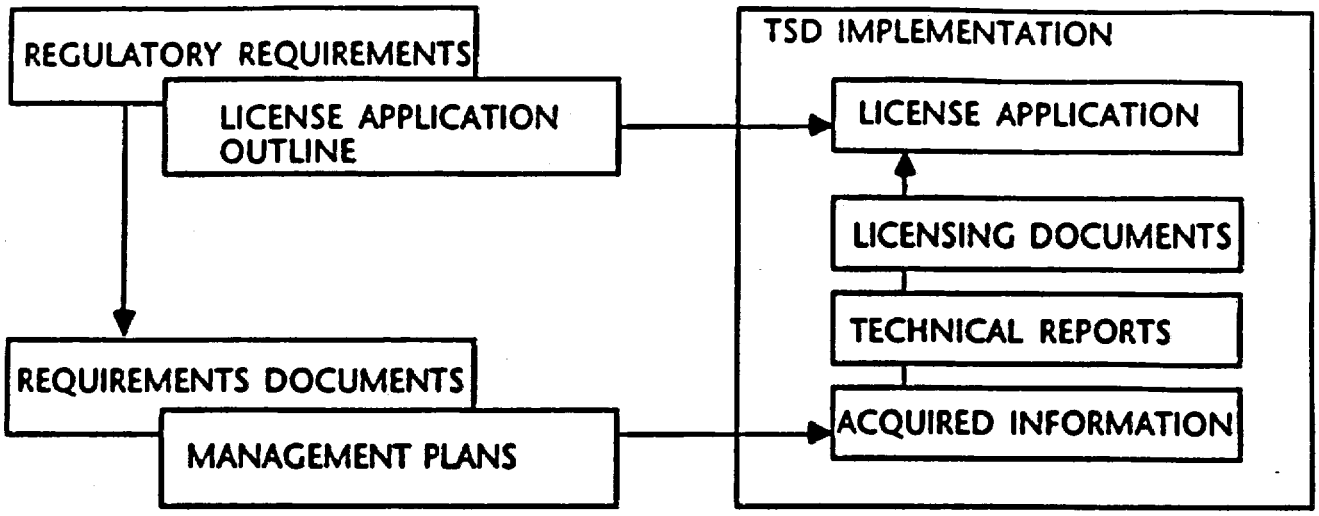

Figure 2-1. Planning and implementation of the technical support document management process.

2.2 TECHNICAL REPORTS

Technical reports are generated by Project participants using information obtained from site data collection or from developmental activities relating to performance assessment or design. They are compilations and interpretations of acquired information used in presenting findings about the site. All technical reports are Project-level deliverables prepared by Project participants and subjected to the participants internal review and approval procedures. The approved technical reports are then tendered by the Technical Project Officer (TPO) to the Project Office for review and acceptance. All technical reports shall have a specified location or locations for reference in the LA.

2.3 LICENSING DOCUMENTS

Licensing documents are prepared as subsections of the LA. They present findings, interpretations, and conclusions pertaining to regulatory requirements (10 CFR Part 60 and regulations and standards incorporated by reference). Each licensing document will be compiled from applicable acquired information and technical reports (and in some cases, other licensing documents) that pertain to its development.

2.4 OTHER LICENSING PRODUCTS

2.4.1 ISSUE RESOLUTION REPORTS

An Issue Resolution Report (IRR) will be prepared to document the resolution of licensing issues. The issues address key regulatory requirements, such as pre- and postclosure performance objectives, favorable and potentially adverse conditions, and repository and waste package design criteria.

The information needed to resolve each issue has been separated into subsets called information needs. Based on these information needs, an issue resolution strategy was developed for each issue, providing direction to the site characterization work. The type of information needed ranges from field data to appropriate computer codes. As this information is gathered or generated, the information need is satisfied, and a report interpreting the information and documenting the resulting conclusions will be prepared. Generally, the type of report needed for input to the IRR will be the technical report.

As all information needs are fulfilled for a particular issue, the reports generated will be integrated into a comprehensive report documenting the resolution of the issue. The Issue Resolution Report will document the implementation of the issue resolution strategy, major changes made during the course of investigations, and the results of the investigations in relation to expected performance measures. The IRR will present a concise, definitive conclusion as to the resolution of the issue.

2.4.2 WORKING PAPERS

Licensing-oriented working papers are technical documents specifically designed to focus discussion on selected topics in prelicensing interactions with regulatory agencies and other parties included in the licensing proceeding. These working papers are proposed as vehicles of early resolution, intended to lessen the likelihood of a challenge on a particular topic during licensing. The working paper is expected to clearly identify a topical area that is controversial. The working paper will attempt to narrow the scope of discussion, focusing on the specific questions in controversy. The working paper will provide a precise description of relevant reference materials, distinguish areas of common understanding from those in controversy, and propose a basis for agreement for the contentious issues.

The topic of the working paper may arise from collected or interpreted data or from more complex analyses or conclusions. In these cases, supplemental research or analyses may be necessary, or clarification of previous work may be sufficient. Should the topic be peripheral to work already performed, the working paper might outline plans for new work and seek agreement on those plans.

Because the licensing-oriented working paper is designed to focus discussion and facilitate understanding, the paper is not expected to contribute directly to the LA. However, the paper will serve as an important reference for conclusions presented in the LA, and any agreements reached as a result of the working paper may affect planned technical activities.

3.0 WORK PLAN FOR THE DEVELOPMENT OF TECHNICAL SUPPORT DOCUMENTATION

Development of the work plan for technical support documentation is a part of overall program planning. The work plan for technical support documentation, a scope of work budgeted in Work Breakdown Structure (WBS) element 1.2.5, encompasses the results of work performed in four other WBS elements as shown in Figure 3-1. This figure also depicts the TSD sequence and its relationship to the nature of the work performed in the WBS elements.

The total scope of preparatory activities required for the implementation of the technical support documentation work plan is shown in Figure 3-2. There are two major phases of the preparatory activities: (1) the definition of requirements, indicated by the left hand sections of the figure and (2) the technical planning, represented by the License Application Guide and its connection to long-range planning.

The definition of requirements begins with regulatory requirements and develops two parallel and supporting planning structures. The first planning structure is based on the LA outline, the second is based on the application of systems engineering called performance allocation. Performance allocation develops subsystem and component requirements in the form of performance measures and parameters needed to complete site investigations, provides the iterative development of a design basis, and encompasses performance assessment modeling.

Technical planning uses the defined requirements, combines them with the set of deliverables developed in the Yucca Mountain Project Planning and Control System (PACS) (as augmented by requirement 6 in Section 4.0, below) and supplementary participant systems such as PARATRAC, and generates a comprehensive set of planning information that configures requirements, parameters, and products, into a logic sequence supporting development of the LA. This planning information is controlled in two technical and regulatory documents, the Test and Evaluation Planning Basis (T&EPB), and the License Application Guide. Requirements for the T&EPB are specified in the Test and Evaluation Plan (T&EP). The License Application Guide is an annex to the TSDMP, under document control, and managed by the Project Office and the Nuclear Regulatory Compliance Department of the Technical and Management Support Services (T&MSS) contractor's Regulatory and Licensing Support organization.

By combining the TSD sequence logic with Project schedule information, these preparatory activities produce an overall logic for LA development. The logic is maintained and monitored using the license application guide and supporting information systems (PACS, TRIMS, PARATRAC, TDMS). The TSD step that results in this logic is performed prior to the standard scheduling and budgeting for the Project, and as indicated above, the step must produce information that is fully compatible with the schedules of the other interacting WBS elements because of the unique cross-WBS requirements depicted in Figure 3-1. The information from the LA logic is supplied for the development or updating of PACS, which influences long-range planning, work plans, and yearly schedules and budgets. The assimilation of TSD

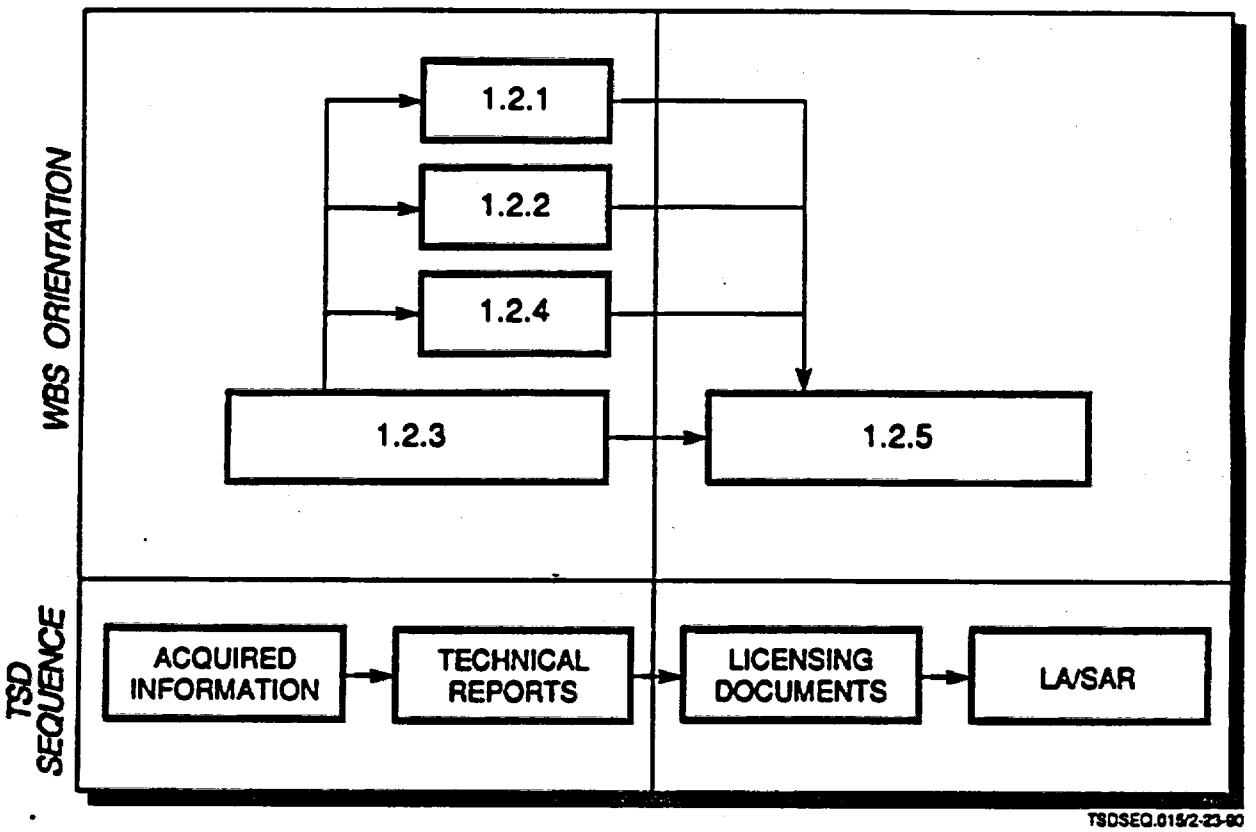

Figure 3-1. Technical support documentation sequence and orientation of WBS elements in support of LA/SAR development.

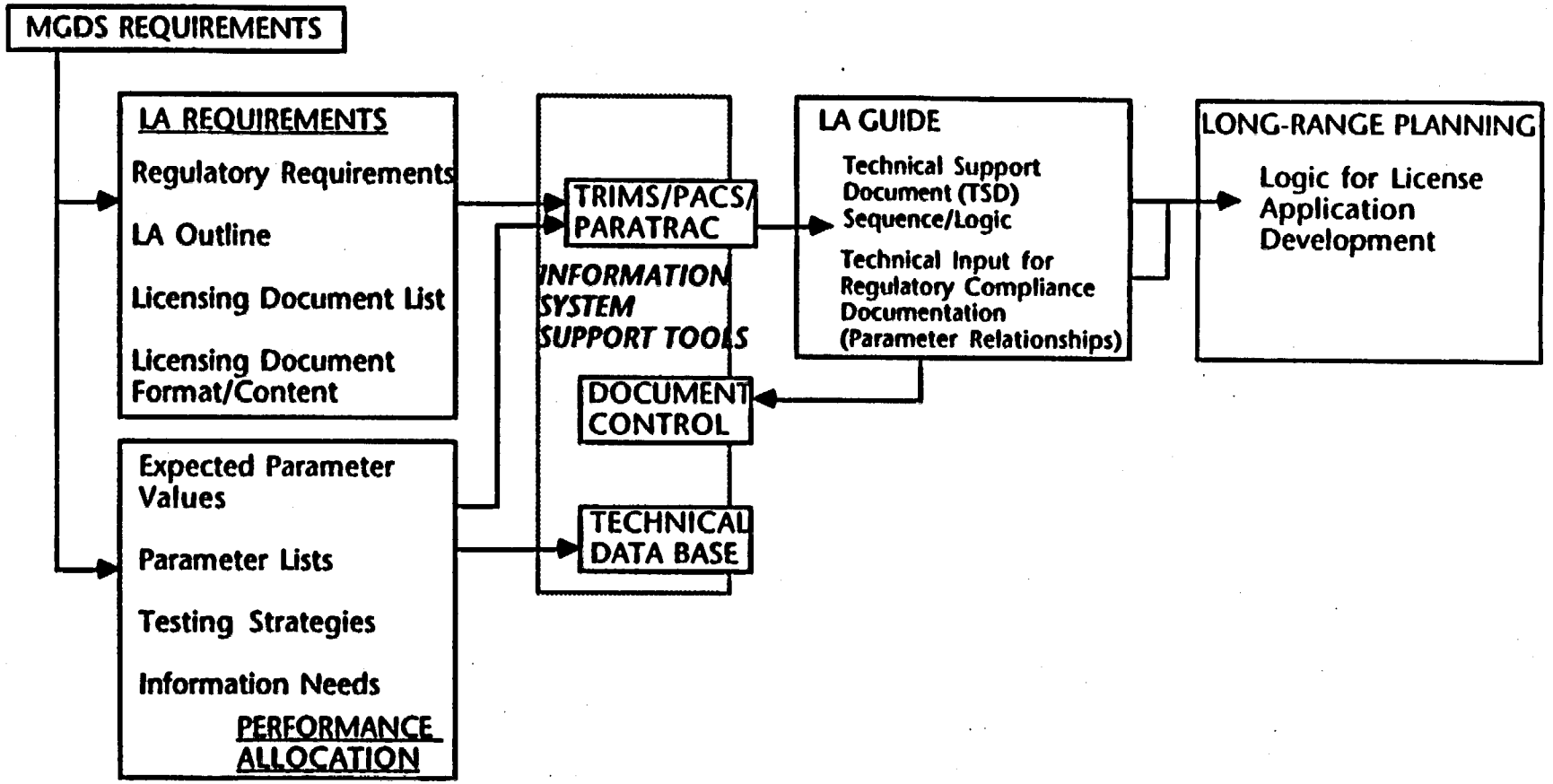

Figure 3-2. Preparatory activities for implementation of technical support documentation management process.

sequence logic into the overall Project planning and control process is the key preparatory step in implementing the TSDMP work plan (Figure 3-3, Step 0, and interaction between steps 0-1, 1-7, and 7-0). Subsequent steps in the work plan are discussed below and the correspondence of those steps with the step numbers in Figure 3-3 are noted.

3.1 WORK FLOW: ACQUIRED INFORMATION

Acquired information is generated from the execution of the planned site characterization program (Figure 3-3, Steps 1 and 2) specifying technical activities that have the ultimate purpose of providing supporting information for licensing documents and showing compliance with regulatory requirements. All acquired information is stored in the Technical Data Management System. The flow of information from site investigations to the Technical Data Management System is described in the TDMP and its implementing procedures. This activity is represented in Steps 2 and 3.

The data tracking system described in the TDMP will provide notification to the TSDMP coordination staff of the receipt of acquired information, along with appropriate WBS, T&EP, and any other specified identification code for each record (data package). The information provided from the data tracking system will furnish the TSDMP coordination staff with a means to monitor data collection activities and the progress being made toward the development of licensing documents (Steps 4 through 12, described below).

A technical review of acquired information described in the T&EPB, as specified in the Systems Engineering Management Plan (SEMP) and implemented in the T&EP, will be undertaken on a routine basis to ensure that results of data collection are within acceptable bounds of expected values and ranges or to determine impacts if results are not as anticipated. The technical review is conducted using implementing procedures in accordance with the SEMP. The TSDMP coordination staff will participate as necessary based on the requirements of the technical review and will provide impact analyses for findings that appear to affect the format and content of the LA and its supporting licensing documents.

3.2 WORK FLOW: TECHNICAL REPORTS

Technical reports are generated by the Project participants, using acquired information obtained from site data collection or from developmental activities relating to performance assessment or design requirements. Acquired information used in technical reports must meet two criteria: (1) that it be generated, submitted, reviewed, approved, and controlled by the Technical Data Management System according to the requirements specified in the TDMP and (2) that it is information required for demonstrating compliance with regulatory requirements in a specific licensing document.

The technical support documentation process utilizes technical reports to initiate licensing document preparation. These reports will reference all data and information used to present findings and interpretations and will

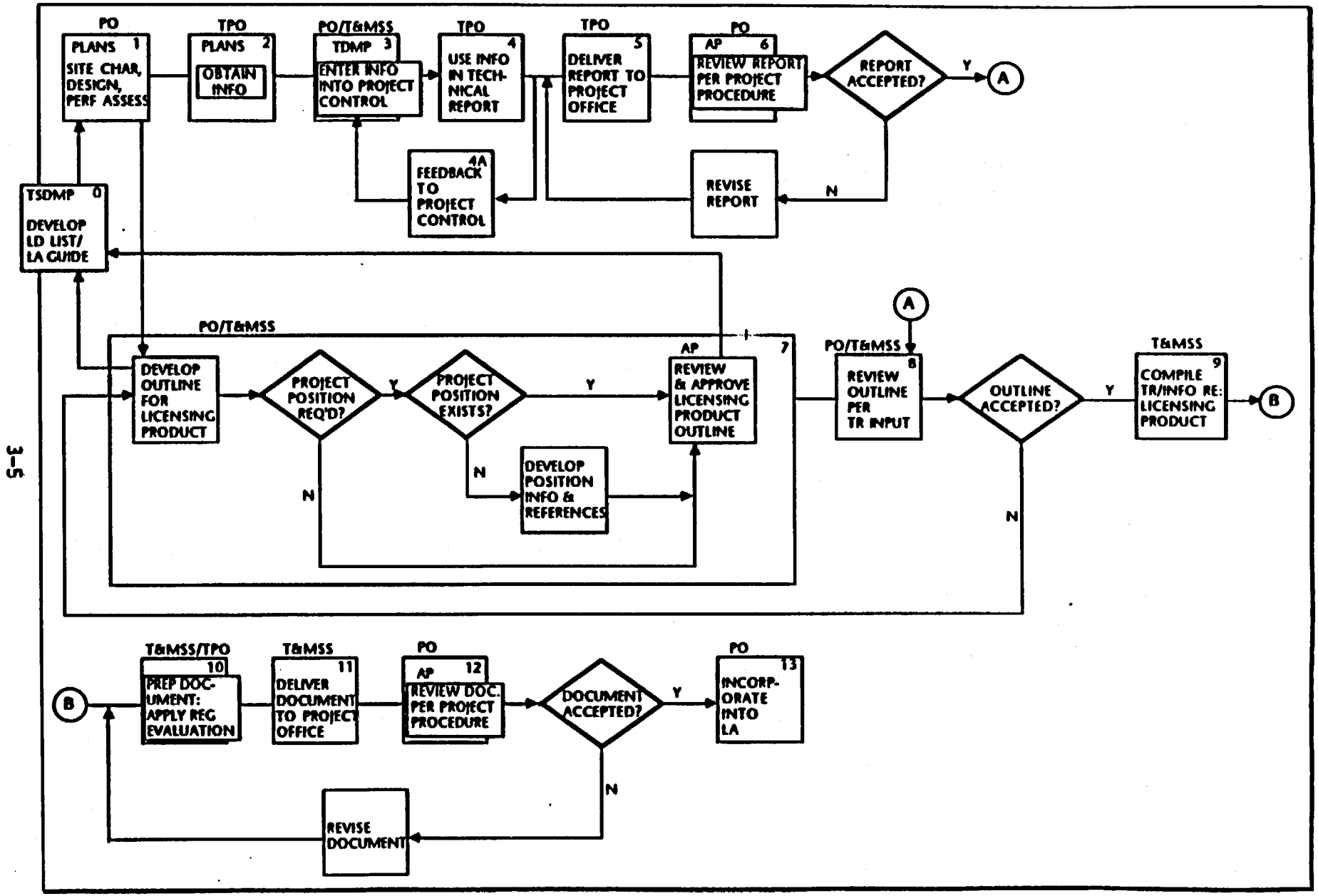

Figure 3-3. Technical support documentation management plan work plan flowchart.

indicate, where possible, the potential subsequent uses of the interpreted information in licensing documents.

Steps 4 through 6 depict the process for development, review, and approval of technical reports. Existing procedures for document review will be used by the Project participants and the Project Office to implement that process. The Project Office procedure is incorporated in this TSDMP by reference. A comprehensive technical review, as specified in the SEMP, will be part of the technical report review process at the discretion of the Project Office. This technical review will be conducted using implementing procedures in accordance with the SEMP. The TSDMP coordination staff will participate as necessary, based on the requirements of the technical review, and will provide impact analysis for findings that appear to affect the format and content of the LA and its supporting licensing documents.

3.3 WORK FLOW: LICENSING DOCUMENTS

The preparation of a licensing document is initiated when a sufficient quantity of the technical information previously identified as supporting that licensing document is received by the Project Office. Upon receipt of the first technical reports specified for use as part of a licensing document, a review of the licensing document outline in the License Application Guide (as developed in Step 7) will be initiated by the TSDMP coordination staff. Changes to the licensing document outline must be implemented following document control procedures that are incorporated in this TSDMP by reference. Licensing document outlines are reviewed by the TSDMP coordination staff at intervals deemed necessary in the period during which the technical reports relevant to preparation of a licensing document are being received (Step 8).

As relevant technical reports are compiled (Step 9), a regulatory evaluation process will ensue, involving interaction between the TSDMP coordination staff and appropriate technical staff from the Project Office and Project participants. The regulatory evaluation process involves two steps: (1) integration of the information into a licensing document (LA subsection) and (2) comprehensive review of the licensing document.

The first integration step (Steps 10 and 11) may vary significantly in terms of time, effort, and approach. Some licensing documents may be produced primarily through the summary and reorganization of technical reports; others may require extensive analysis, review, and additional interaction with technical staff. The TSDMP coordination staff will determine which licensing documents are expected to require longer periods of development by analyzing the TSD sequence (logic).

The second step, the comprehensive review (Step 12), involves an evaluation of the licensing document for completeness, focus, quality, tone, and emphasis. References will be examined to ensure consistency among Project documents (technical reports and acquired information supporting the licensing document or other licensing documents with a bearing on the contents of an individual licensing document). The regulatory evaluation process ensures that the licensing document contains the appropriate

information and orientation for use in addressing the requirements stated in the applicable regulations.

Procedures for licensing document review by the Project Office will control the review and approval process and are incorporated by reference in this TSDMP. A comprehensive technical review, as specified in the SEMP, will be part of the licensing document review process at the discretion of the Project Office.

3.4 WORK FLOW: OTHER LICENSING PRODUCTS

In addition to the licensing documents designed as integral to the license application, two other categories of licensing products will be required for supplementing the licensing process. These categories are Issue Resolution Reports (IRR) and licensing-oriented working papers. The process for developing these categories of documents is similar to that for licensing documents with some variation in emphasis.

As with licensing documents, the first step in producing IRRs and working papers is the development of an annotated outline. Each IRR will be organized in parallel with the structure presented in the T&EP. The working papers will require flexibility, and the outline formats may differ significantly from paper to paper.

If the IRRs or working papers will present a Project position, a draft position will be prepared concurrently with the annotated outline. The outline (and position if needed) will be reviewed by the Project Office and any appropriate Project participants. The review will be conducted according to Project procedures.

Once the annotated outline is approved, all information pertinent to the IRR or working paper will be compiled. Most of this information will be in the form of data from the Technical Data Management System or technical reports.

The appropriate Project participant(s) staff, will prepare the document, applying the regulatory evaluation process. For IRRs, the evaluation effort will focus on completion of the issue resolution record, ensuring that all necessary components have been completed and documented.

For working papers, the type and extent of the evaluation effort required are expected to vary significantly for individual papers. Some working papers may be oriented toward resolving differing regulatory interpretations, requiring mostly legal and licensing staff and focus. Other working papers may be solely technical in nature, requiring only licensing support to aid in presentation and interactions. Most, however, are expected to draw on both technical and licensing expertise.

The IRR or working paper will be delivered to the Project Office for review according to Project procedures. The Project Office will solicit and coordinate comments from the appropriate Project participants.

4.0 REQUIREMENTS FOR TECHNICAL SUPPORT DOCUMENTATION MANAGEMENT

The requirements listed below establish the actions essential to implementation of the TSDMP. The requirements define the necessary planning steps, including an early review to ensure that the content of and schedules for technical support documentation are consistent with established technical plans and long-range planning schedules. Other requirements have been developed to define the steps needed to produce, review, and manage the technical support documentation.

1. The license application components to be prepared (License Application and Environmental Impact Statement) shall be identified, their format and content established, and the Technical Support Documentation input(s) for preparing licensing documents shall be determined

2. A network showing the sequence of the components of Technical Support Documentation, from the acquisition of the initial data (or information) to the preparation of a licensing document, shall be prepared and distributed to the TPO(s) responsible for the input

3. The TPOs responsible for input to licensing documents (identified in the TSD sequence of Technical Support Documentation) shall reach a mutual agreement with the Project Office on the investigations to be performed and the documentation to be provided.

4. The deliverable components (from requirement 2) of Technical Support Documentation shall be identified to the extent practicable at least semiannually, and the information shall be assimilated with the Planning and Control System (PACS) data base.

5. A computer-based Technical and Regulatory Information Management System (TRIMS) shall be developed and maintained to

   a. Facilitate the determination of

      (1) The technical support documentation sequences.

      (2) The relation of technical support documentation sequences to the PACS schedule and to the T&EPB.

      (3) The impacts of schedule variance.

      (4) The relationship of performance allocation parameter values as determined in the investigation processes, to the requirements specified for the license application.

   b. Produce management reports describing the status of preparation of technical support documentation and licensing documents and the achievement of performance allocation goals.

6. The schedule for performing investigations, preparing technical support documentation, and developing licensing documents shall be entered in the PACS data base.

7. The initial level of technical support documentation shall be acquired information that has been entered in a Project-controlled data base in accordance with the Technical Data Management Plan and applicable procedures.

8. The technical support documentation that consists of a technical report developed from Project-controlled data shall be prepared and transmitted to the Project Office by the TPOs in accordance with that Project participant's internal procedures. This technical support documentation shall be reviewed and accepted by the Yucca Mountain Project Office in accordance with the applicable Project procedure

9. The documents produced by technical and regulatory evaluation shall be reviewed and approved at intervals as specified below.

   a. An annotated outline for the proposed documents shall be reviewed and accepted by the Project Office in accordance with the applicable Project procedure.

   b. The completed documents shall be reviewed and accepted in accordance with the applicable Project procedure

REFERENCES

DOE (U.S. Department of Energy), Mined Geologic Disposal System Regulatory Compliance Plan (In preparation)

DOE (U.S. Department of Energy), Mined Geologic Disposal System Performance Assessment Implementation Plan (In preparation)

DOE (U.S. Department of Energy), Mined Geologic Disposal System Systems Engineering Management Plan (In preparation)

DOE (U.S. Department of Energy), Repository Plan (In preparation)

DOE (U.S. Department of Energy), 1988. Site Characterization Plan, Yucca Mountain Site, Nevada Research and Development Area, Nevada, DOE/RW-0199, December 1988.

DOE (U.S. Department of Energy), Site Requirements Documents (In preparation)

DOE (U.S. Department of Energy), Technical Data Management Plan (In preparation)

DOE (U.S. Department of Energy), 1989a. Technical Planning Basis, YMP/CC-0005, June 1989.

DOE (U.S. Department of Energy), Waste Package Plan (In preparation)

DOE (U.S. Department of Energy), 1989b. Work Breakdown Structure Index and Dictionary, YMP/CC-0001, August, 1989

NRC (U.S. Nuclear Regulatory Commission), U.S. Nuclear Regulatory Commission Rules and Regulations, Title 10, Chapter 1, Code of Federal Regulations, Part 60, "Disposal of High-Level Radioactive Wastes in Geologic Repositories," September 1989. U. S. Government Printing Office, Washington D. C.

APPENDIX A

LICENSE APPLICATION GUIDE

A License Application Guide will be provided as an annex to Technical Support Documentation Management Plan. The schedule for development of the guide is dependent on future receipt of the Nuclear Regulatory Commission (NRC) annotated format and content regulatory guide for the license application.

The contents of the License Application Guide will be the following:

1. NRC Annotated Format and Content Regulatory Guide for the Licensing Application.

2. References of regulatory requirements to the outline of the license application.

3. References of licensing documents to the outline of the license application.

4. For individual license application subsections:

   a. Subsection outline.
   b. Regulatory references.
   c. Technical support documentation logic depiction.

      (1) Diagram.
      (2) Table.