Threaded Gun Systems Technical Manual

1.562 - 7.000 inch

MAN-TGS1-000 (R11)

OWEN OIL TOOLS

12001 Cr 1000
Godley, Texas, 76044, USA
Phone: +1 (817) 551-0540
Fax: +1 (817) 551-1674
www.corelab.com/owen

Warning: use of owen equipment contrary to manufacturer's specifications or operating instructions may result in property damage, serious injury or fatality. If you are not trained in the handling and use of explosive devices, do not attempt to use or assemble any owen perforating systems or owen firing devices.

This technology is regulated by and, if exported, was exported from the united states in accordance with the export administration regulations (EAR). Diversion contrary to U.S. Law is prohibited. Export and/or re-export of this technology may require issuance of a license by the bureau of industry and security (BIS), U.S. Department of Commerce. Consult the BIS, the EAR, and/or Owen Compliance Services, Inc. To determine licensing requirements for export or re-export of this technology.

This document contains confidential information of Owen Oil Tools LP (Owen) and is furnished to the customer for information purposes only. This document must not be reproduced in any way whatsoever, in part or in whole, or distributed outside the customer organization, without first obtaining the express written authorization of owen. This document is the property of owen and returnable upon request of Owen.

©2007, 2018 Owen Oil Tools All rights reserved

Caution: ***Shot Gun Systems may trap pressure which can be hazardous to personnel. If the gun components trap pressure, maintain a safe distance from the carrier and slowly remove the gun sub until the o-rings are exposed and the pressure safely vents!***

1.0 Threaded Gun Systems Overview

Owen Oil Tools offers a wide variety of Threaded Gun systems; varying in OD size, length of carrier, the number of shots per foot (SPF), phasing of charges, charge type, and explosive materials.

The procedures in this manual are strictly a suggested method for loading Threaded Gun systems with explosive charges. This manual does not cover Slick Gun systems. It is understood that each customer or company may have their own rules, procedures, or recommended method of loading perforating guns. Owen Oil Tools does not want to contradict these procedures in any way or form. We strongly suggest that our customers observe and abide by all the rules and regulations pertaining to the handling and transportation of explosive components.

Once a gun system has been chosen for a particular job application, the loading procedures will be based on one of three basic styles. The three styles are; the External Wrap, Internal Wrap and the Internal Weave. The three examples below, will help identify these systems.

External Wrap- With this system the shaped charge seats all the way through the tube strip. It is held in place by bend tabs and Det Cord Clips. This system features a round hole in the tube strip (no slot).

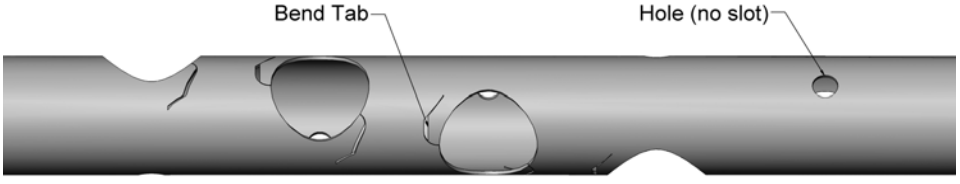

Internal Wrap- With this system the shaped charge seats all the way through the tube strip. It is held in place by bend tabs (no Det Cord Clips required). This system features a round hole with slots in the tube strip.

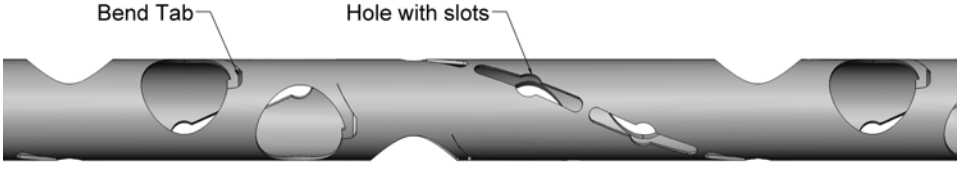

©2007, 2018 Owen Oil Tools All rights reserved

MAN-TGS1-000.indd 2 10/5/18 1:16 PM

Internal Weave- With this system the shaped charge seats half way through the tube strip. It is held in place by either bend tabs/Det Cord Clips or Pop Rivets.

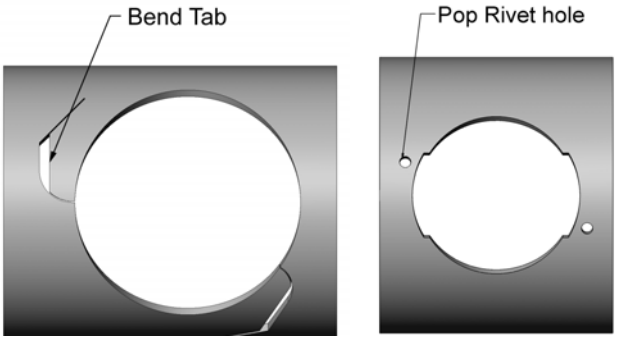

For systems that require Det Cord Clips, Owen recommends installing them by using an Owen Loading Fork.

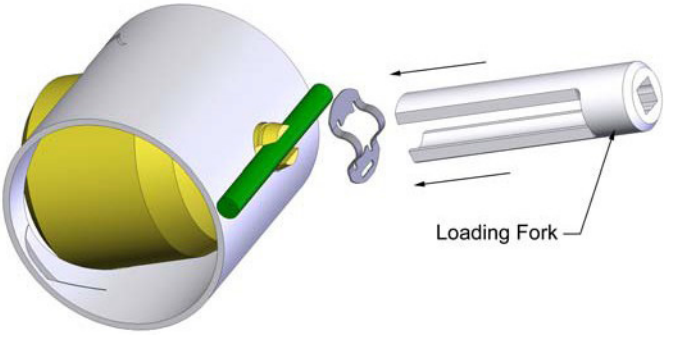

Using Subs with Threaded Gun Systems

There are many types of subs that can be used with Owen Threaded Gun Systems. Often these subs can be used several times without problems. However, over time, these subs can and will swell. Because of this, Owen recommends using the graphic and chart below to reference maximum sub dimensions.

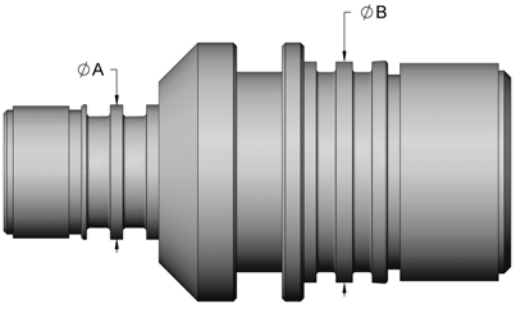

Gun OD (in.)	Max. Diameter (in.) (A)	(B)	Max. Diameter (mm.) (A)	(B)
1.562	1.307	1.308	33.20	33.22
2.000	1.307	1.717	33.20	43.61
2.375	1.307	2.123	33.20	53.92
2.500	1.307	2.159	33.20	54.84
2.750	2.177	2.406	55.30	61.11
2.875	2.177	2.561	55.30	65.05
3.125	2.812	2.816	71.42	71.53
3.375	2.812	2.870	71.42	72.90
4.000	2.812	3.497	71.42	88.82
4.500	2.812	3.996	71.42	101.50
5.125	2.812	4.559	71.42	115.80
5.500	2.812	5.097	71.42	129.46
7.000	2.812	6.308	71.42	160.22

©2007, 2018 Owen Oil Tools All rights reserved

The gun subs used with the Owen Threaded Gun Systems are designed for a range of applications including high pressure and temperature as well as high bending and tensile loads. For high pressure and temperature applications o-ring backups may be required (refer to Technical Information, O-Ring Specifications for details). The gun sub and carrier thread must be thoroughly cleaned and carefully lubricated with an oilfield approved compound prior to assembly and torqueing. It is recommended that each gun sub be tightened to the carrier and torqued with the appropriate equipment. Refer to recommended torque values below.

GUN SYSTEM	THREAD CALLOUT	RECOMMENDED MAKE UP TORQUE				YIELD TORQUE	
		MINIMUM		MAXIMUM			
		FT-LBF	*N-M*	*FT-LBF*	*N-M*	*FT-LBF*	*N-M*
1.688 -2.500, Firing Head	**1-9/32 - 12 Stub Acme**	200	271	350	475	700	950
1.562	**1-9/32 - 12 Stub Acme**	200	271	350	475	700	950
2.000	**1-11/16 - 8 Stub Acme**	300	407	688	933	1,375	1866
2.500	**2-1/8 - 8 Acme**	400	543	1,125	1527	2,250	3053
2.750-2.875, Firing Head	**2-1/8 - 6 acme**	500	679	1,900	2578	3,800	5157
2.750	**2-3/8 - 6 Acme**	500	679	1,400	1900	2,800	3800
2.875	**2-1/2 - 6 Acme**	500	679	1,400	1900	2,800	3800
3.125 - 7.000, Firing Head	**2-3/4 - 6 Acme**	600	814	2,050	2782	4,100	5564
3.125	**2-3/4 - 6 Acme**	600	814	1,650	2239	3,300	4478
3.375	**2-13/16 - 6 Acme**	700	950	3,000	4071	5,900	8006
4.000	**3-7/16 - 6 Acme**	800	1086	4,000	5428	8,300	11263
4.500	**3-15/16 - 6 Acme**	850	1153	5,000	6785	10,650	14452
4.625	**3-15/16 - 6 Acme**	850	1153	5,000	6785	10,650	14452
5.125	**4-1/2 - 6 - Acme**	1,000	1357	6,000	8142	15,100	20491
5.500	**5 - 6 Acme**	1,000	1357	5,000	6785	12,000	16284
7.000	**6-1/4 - 5 Acme**	1,200	1628	7,000	9499	35,800	48581

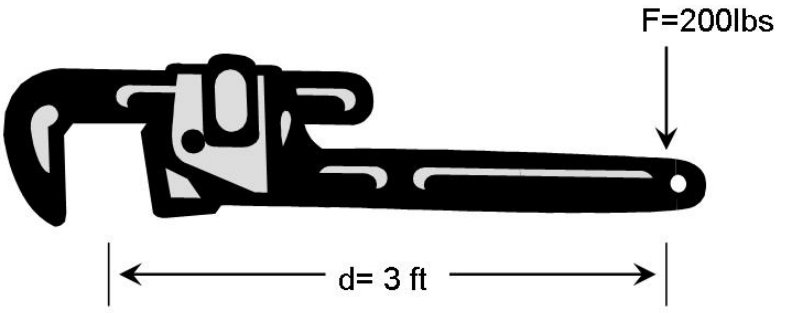

Example:

T = FXd = 200 lbs.X 3 ft. = 600 lb. ft.

F = Applied Force (lb.)

d = length of the pipe wrench (ft.)

©2007, 2018 Owen Oil Tools All rights reserved

MAN-TGS1-000.indd 4 10/5/18 1:16 PM

2.0 Pre-Assembly

Warning: ***Explosives are destructive by nature! Do not attempt to disassemble or alter explosive products in any manner! Do not crush, hammer, pinch, impact, pull wires or abuse any explosive product!***

Warning: ***Always be sure to follow safe operating practices as found in API RP-67 in accordance with governmental regulations, company policies and manufacturer's recommendations!***

Note: *Before loading, visually inspect the carrier and components for any defects and make sure that all threads and seal bores are clean.*

Once you have obtained all the necessary hardware and explosives for your particular job application, there are a few steps to start with that are common to the three styles of gun systems. These common steps are as follows.

2.1 Place the gun on a loading table or workbench.

2.2 Mark the outside of the carriers to correspond with the zones to be perforated. Start with the bottom shot and measure upward. Don't forget to take into account the lengths of any subs which will be used to connect the carriers together. Mark these zones clearly and label accordingly.

2.3 If there are thread protectors on the ends of the carrier, remove them.

2.4 Determine which end has the alignment pin End Plate (it should be identified by a stenciled "load" mark), then remove the retaining Snap Ring to extract the tube strip. While the Locking Ball (on the opposite end) will still have to be loosened so that the tube strip can be removed, it should not be necessary to remove the Snap Ring on the Locking Ball End Plate. By leaving the Snap Ring in place, it will act as a stop when reinserting the loaded tube strip.

2.5 Remove the tube strip, lay it next to the carrier it was removed from and mark the tube strip to match the carrier.

Note: *Only remove enough tube strip assemblies that can be safely loaded on your work bench at one time.*

©2007, 2018 Owen Oil Tools All rights reserved

MAN-TGS1-000.indd 5 10/5/18 1:16 PM

Note: *Line up the charge holes in the tube strip with the scallops cut in the carrier to mark accurately. This will also ensure you have the correct density and phasing for the tube strip and carrier being used.*

Note: *The Alignment Pin on the Alignment Pin End Plate must align with the opening of the first charge hole in the tube strip.*

3.0 Button Centralizer Installation

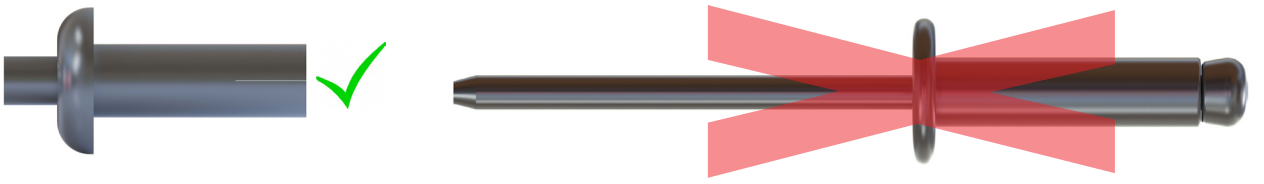

Drive Rivet **Pop Rivet**

Caution: ***The steps below are to be completed using drive rivets only. Drive rivets should not be confused with pop rivets which are not interchangeable for this application.***

In some gun systems the tube strip must be centralized in the gun carrier with button centralizers. The button centralizers are installed with drive rivets into rivet holes adjacent to the charge hole cutouts. When required, these centralizers must be installed prior to loading the shaped charges.

3.1 Place the tube strip on a well-supported bench.

3.2 Locate and align the button centralizer to the rivet hole cutout in the tube strip. Insert the large diameter end of the drive rivet through the centralizer and into the tube strip.

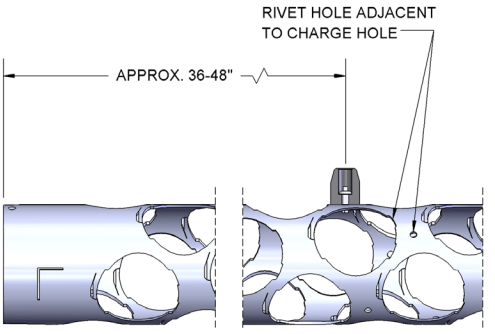

©2007, 2018 Owen Oil Tools All rights reserved

3.3 With a punch placed over the drive rivet hammer the rivet into place. The rivet pin will be flush with the head of the rivet when installed.

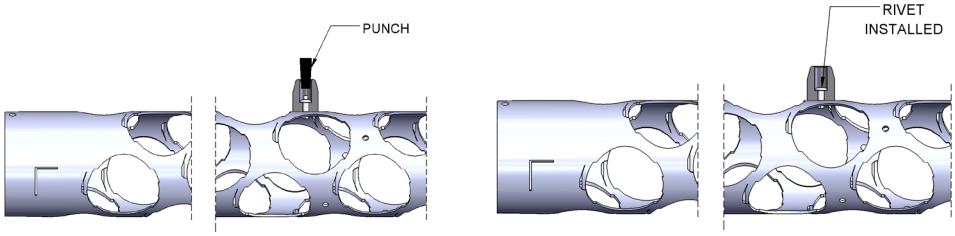

3.4 Repeat until all the centralizers are in place.

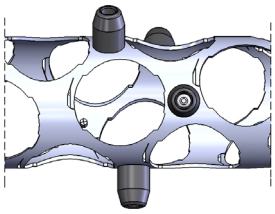

Note: *The button centralizers will be installed in groups of 5 or 6 depending on the gun phasing. Enough centralizers are provided with the gun assembly to install in all the holes provided in the tube strip. In the event the tube strip has a centralizer hole following each charge hole, the button centralizer groupings should be spaced out approximately 4' apart on the tube strip to provide adequate centralization.*

4.0 External Wrap, Boostered Connections

Note: *For the purposes of this manual the Locking Ball End will be referred to as the Load end. This way the Booster Support Tube is onthe Locking Ball End Plate and will be inserted rst into the carrier after loading. This will help protect the long Support Tube from breaking during handling.*

The detonating cord on this style, is placed on the outside of the tube strip and spirals around, connecting the charges forming the explosive sequence. You should leave the top and bottom charge holes blank, before installing the det cord. Do not remove the endplates.

Note: *With external wrap style tube strips, the det cord is held in place by using Det Cord Clips.*

©2007, 2018 Owen Oil Tools All rights reserved

MAN-TGS1-000.indd 7 10/5/18 1:16 PM

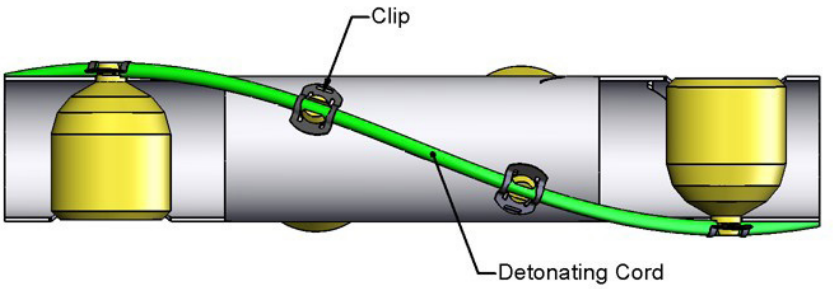

4.1 Install the End Plate Inserts and use a locking compound on the insert threads. The inserts are provided in the Booster Transfer Kit.

4.2 To load the charges, start at the Load End of the tube strip and insert a charge through the large hole until the det cord slot of the charge sticks out through the small hole. Secure in place by using the bend tab on the tube strip. The charge should not be able to move side to side. Continue to load the required charges to complete the tube strip.

Note: *Insert only the number of charges that you need loaded. The tube strip can either be fully or partially loaded.*

4.3 Next, using Owen Super Cutters, cut a suf cient length of det cord that will completely load your tube strip and that will allow for the Transfer Tube. One method of doing this, is to wrap the det cord around the tube strip following the charge holes. Take that length and add 2 ft (61 cm). It is always better to have too much, than not enough.

Note: *To determine the next length of det cord to be cut, measure the rst cut length before loading, then measure the scrap length when nished. Subtract the scrap length from the original cut length to determine the length of the next piece of det cord.*

STOP

Warning: ***Never load a tube strip when the det cord is still attached to the roll! Cut the necessary length of cord, then remove the roll from the loading area!***

4.4 Make a clean, squared-off cut on one end of the det cord by using an Owen Super Cutter tool.

4.5 Visually inspect the cut, then install the proper Bi-directional Booster over the end of the det cord and crimp in place by using Owen Super Crimpers.

©2007, 2018 Owen Oil Tools All rights reserved

MAN-TGS1-000.indd 8 10/5/18 1:16 PM

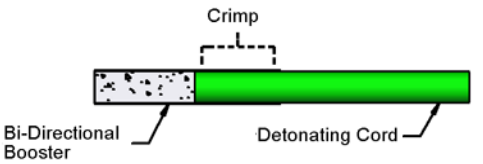

4.6 Insert the crimped Booster and cord through the center hole in the Locking Ball End Plate/ Insert until approximately 10 in (25cm) sticks out. Slide the Rubber Grommet (provided in the Booster Transfer Kit) over end of cord until it's against the End Plate. Slide the Booster Support Tube (provided in the transfer Kit) over the cord and thread into End Plate. This will push the rubber grommet into the threaded recess. As you thread in the tube, position the end of the booster flush with the to of the support tube. Tighten firmly by hand to compress the rubber grommet around the det cord.

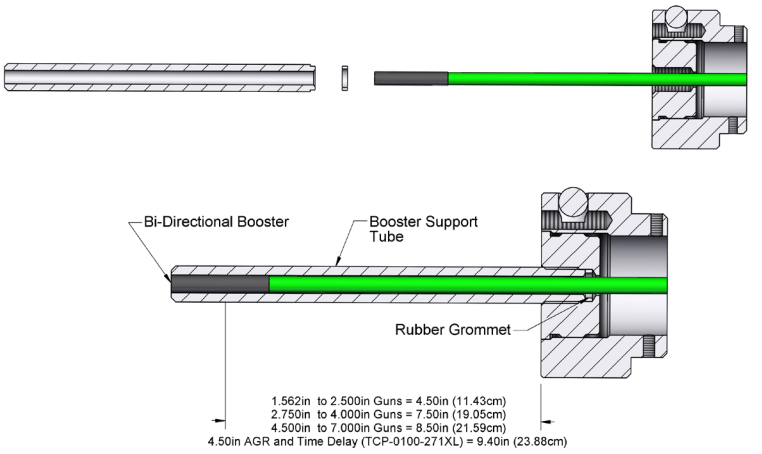

Note: *For 1.563 through 2.500 guns, the det cord may be cut 1.250 inch shorter than shown to minimize swelling of the Top Sub thread and seal diameter. This will place the Bi-Directional Booster 1.250 inch deep inside the Booster Support Tube which locates it further from the detonator. Care must be taken to ensure the Bi-Directional Booster is properly located during assembly.*

4.7 To prevent chafing the det cord on the metal edge of the det cord slot in the tube strip, wrap some electrical tape or rubber tubing around the det cord at the contact area as shown below.

©2007, 2018 Owen Oil Tools All rights reserved

MAN-TGS1-000.indd 9 10/5/18 1:16 PM

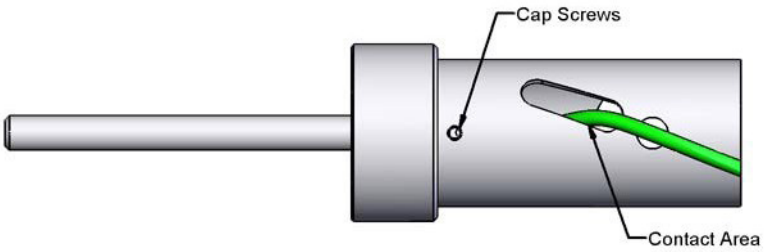

4.8 Insert a charge into the first charge hole as required. Lay the det cord in the first charge slot (you may need to rotate the charge so that the det cord groove aligns with the path of the det cord) and secure in place using a Det Cord Clip.

Caution: ***Be careful not to nick or cut the det cord when inserting it into the slot of the charge or installing the Det Cord Clip!***

4.9 Once the det cord is attached to the charge, spiral the cord around the tube strip to the next charge/charge hole and secure in place. Continue down the length of the tube strip until you reach the last charge hole.

4.10 Position the det cord across the last charge hole of the Alignment Pin End of the tube strip, then put it through the slot and insert it through the Alignment Pin End Plate. Refer to the loading tip in step 3.7 concerning det cord chafing. This establishes the path of the det cord and aids in cutting the correct length for connecting to the Booster.

4.11 Make a clean and squared-off cut of the det cord 3/8 in to 7/16 in (.95 cm to 1.1 cm) from the face of the End Plate. If using Owen Super Cutters, place the cutter head against the End Plate to make the cut.

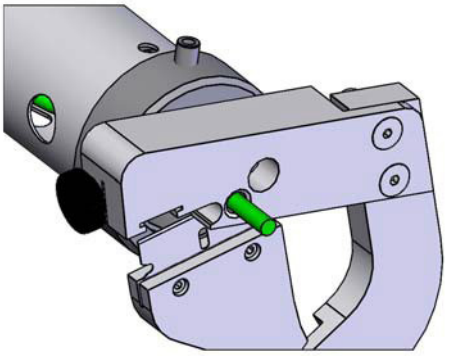

4.12 Carefully remove the End Plate without disturbing the cut.

©2007, 2018 Owen Oil Tools All rights reserved

MAN-TGS1-000.indd 10 10/5/18 1:16 PM

4.13 Crimp a Bi-directional Booster on the det cord. Insert the boostered cord through the End Plate, then secure the End Plate to the tube strip using the 2 Cap Screws.

4.14 Install the bottom charge and secure it in place with a Det Cord Clip.

4.15 With the End Plate secured to the tube strip, slide the rubber grommet over the end of Booster up to the End Plate. Thread the Booster Retainer (provided with the Booster Transfer Kit) into the End Plate compressing the rubber grommet. Make sure that the Booster stays against the internal stop of the Booster Retainer and tighten firmly.

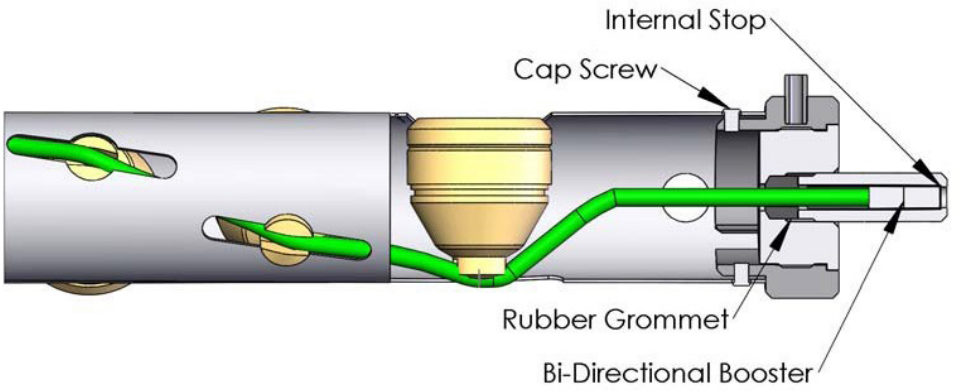

Note: *If the gun is used as a bottom gun, it is still recommended to use a Booster (even if you use a loaded tube strip as a bottom gun and a bottom Booster is not needed for the explosive transfer). Operational plans often change at the last minute and additional guns may need to be added to the bottom gun.*

4.16 The fully loaded external wrap style tube strip is now complete and is ready to be installed in its accompanying carrier. The installation of the tube strip is covered in section 9.0.

5.0 External Wrap, Non-Boostered Connections

Note: *For the purposes of this manual the Locking Ball End will be referred to as the Load End.*

The detonating cord on this style, is placed on the outside of the tube strip and spirals around, connecting the charges forming the explosive sequence. You should leave the top and bottom charge holes blank, before installing the det cord. Do not to remove the End Plates at this time.

©2007, 2018 Owen Oil Tools All rights reserved

MAN-TGS1-000.indd 11 10/5/18 1:16 PM

Note: *With the external wrap style tube strip, the det cord is held in place by using Det Cord Clips.*

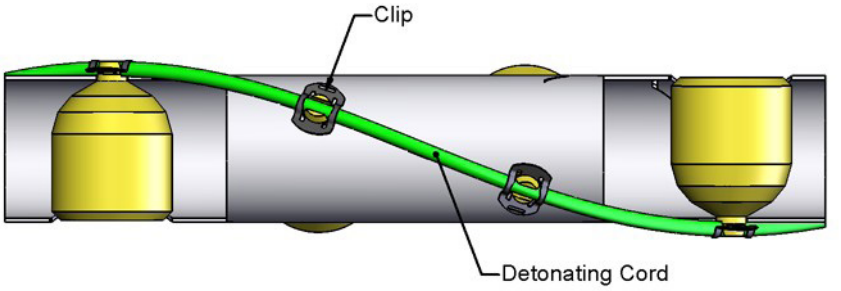

5.1 To load the charges, start at the Load End of the tube strip and insert a charge through the large hole until the det cord slot of the charge sticks out through the small hole. Secure in place by using the bend tab on the tube strip. The charge should not be able to move side to side. Continue to load the required charges to complete the tube strip.

Note: *Insert only the number of charges that you need loaded. The tube strip can be fully or partially loaded.*

5.2 Next, using Owen Super Cutters, cut a sufficient length of det cord that will completely load your tube strip and that will allow for det cord initiation. One method of doing this, is to wrap the det cord around the tube strip following the charge holes. Take that length and add 3-4 ft (0.9 - 1.2m). It is always better to have too much, than not enough.

Note: *To determine the next length of det cord to be cut, measure the first cut length before loading, then measure the scrap length when finished. Subtract the scrap length from the original cut length to determine the length of the next piece of det cord.*

STOP

Warning: ***Never load a tube strip when the det cord is still attached to the roll! Cut the necessary length of cord, then remove the roll from the loading area!***

5.3 Make a clean, squared-off cut on the end of the det cord by using an Owen Super Cutters tool.

5.4 Visually inspect the cut, then install the proper end seal over the end of the det cord and crimp in place by using Owen Super Crimpers.

©2007, 2018 Owen Oil Tools All rights reserved

5.5 Insert the crimped end seal and cord through the center hole in the End Plate at the Load end of the tube strip until enough det cord sticks out for your operational requirements

5.6 To prevent chafing the det cord on the metal edge of det cord slot in the tube strip, wrap some electrical tape or rubber tubing around the det cord at contact area as shown below.

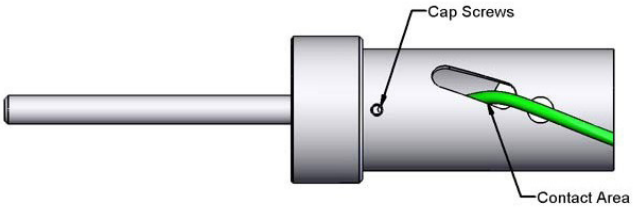

5.7 Lay the det cord in the groove of the first charge already in place (you may need to rotate the charge so that the det cord groove aligns with the path of the det cord) and secure in place using a Det Cord Clip.

Caution: ***Be careful not to nick or cut the det cord when inserting it into the slot of the charge or installing the Det Cord Clip!***

5.8 Once the det cord is attached to the charge, spiral the cord around the tube strip to the next charge/charge hole and secure in place. Continue down the length of the tube strip until you reach the last charge hole.

5.9 Position the det cord across the last charge hole of the bottom of the tube strip, then put it through the slot and insert it through the Pinned End Plate. Refer to the loading tip in step 3.7 concerning det cord chafing. This establishes the path of the det cord and aids in cutting the correct length for det cord initiation.

5.10 Make a clean and squared-off cut of the det cord.

5.11 Crimp an end seal on the det cord.

5.12 Secure the Det Cord in the last charge and secure in place with a Det Cord Clip.

5.13 The fully loaded external wrap style tube strip is now complete and is ready to be installed in its accompanying carrier. The installation of the tube strip is covered in section 9.0.

©2007, 2018 Owen Oil Tools All rights reserved

MAN-TGS1-000.indd 13 10/5/18 1:16 PM

6.0 Internal Wrap, Boostered Connections

Note: *For the purposes of this manual the Locking Ball End will be referred to as the Load end. This way the Booster Support Tube is on the Locking Ball End Plate and will be inserted first into the carrier after loading. This will help protect the long Support Tube from breaking during handling.*

The detonating cord on this style, is placed on the inside of the tube strip and spirals around, connecting the charges forming the explosive sequence. Do not to remove the endplates at this time.

Note: *With the internal wrap style tube strip, the det cord is held in place by the charge and tube strip (no Det Cord Clips are required).*

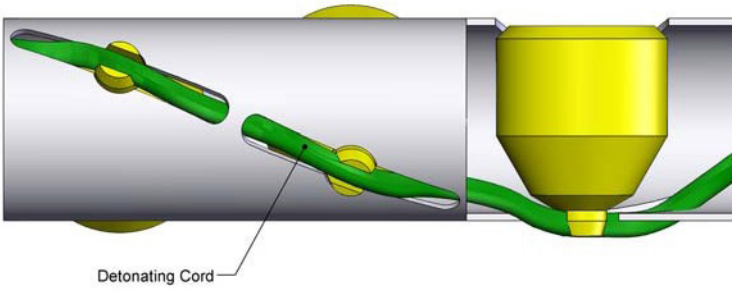

6.1 Install the End Plate Inserts and use a locking compound on the insert threads. The inserts are provided in the Booster Transfer Kit.

6.2 Next, using Owen Super Cutters, cut a sufficient length of det cord that will completely load your tube strip and that will allow for the Transfer Tube. One method of doing this, is to wrap the det cord around the tube strip following the charge holes. Take that length and add 2 ft (61 cm). It is always better to have too much, than not enough.

Note: *To determine the next length of det cord to be cut, measure the first cut length before loading, then measure the scrap length when finished. Subtract the scrap length from the original cut length to determine the length of the next piece of det cord.*

STOP

Warning: ***Never load a tube strip when the det cord is still attached to the roll! Cut the necessary length of cord, then remove the roll from the loading area!***

6.3 Place the det cord through the tube strip and through both End Plates.

©2007, 2018 Owen Oil Tools All rights reserved

MAN-TGS1-000.indd 14 10/5/18 1:16 PM

Note: *To help run the cord through the tube strip, use a non-sparking Fish Tape or Fish Tape Leader (used by electricians and plumbers). Insert the fish tape through tube strip and attach det cord to its end using electrical tape. Withdraw the fish tape, pulling det cord through tube strip. Be careful not to scrape the outer covering of the cord as the fish tape is retracted.*

6.4 Make a clean, squared-off cut on the top end of the det cord by using an Owen Super Cutters tool.

6.5 Visually inspect the cut, then install the proper Bi-directional Booster over the end of the det cord and crimp in place by using Owen Super Crimpers.

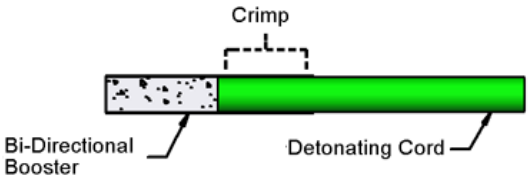

6.6 Insert the crimped Booster and cord through the center hole in the Locking Ball End Plate/ insert until approximately 10 in (25 cm) sticks out. Slide the Rubber Grommet (provided in the Booster Transfer Kit) over the end of the cord until it's against the End Plate. Slide the Booster Support Tube (provided in the Booster Transfer Kit) over the cord and thread into the End Plate. This will push the rubber grommet into the threaded recess. As you thread in the tube, position the end of the Booster flush with the top of the Support Tube. Tighten firmly by hand to compress the rubber grommet around the det cord.

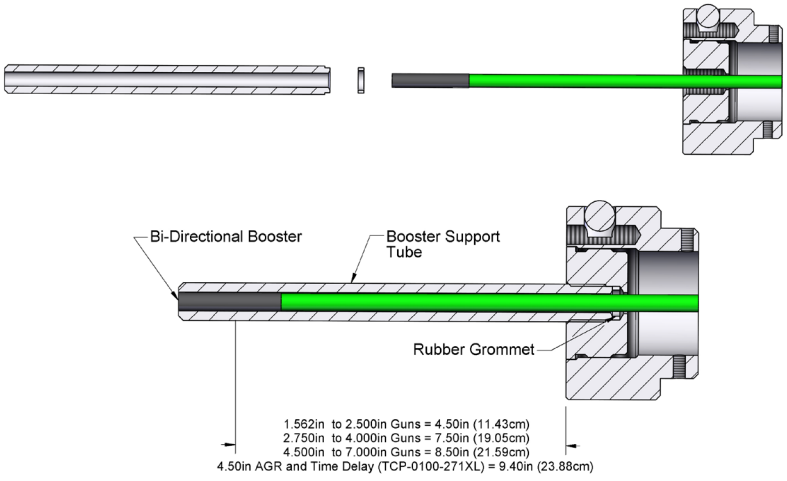

©2007, 2018 Owen Oil Tools All rights reserved

MAN-TGS1-000.indd 15 10/5/18 1:16 PM

Note: *For 1.563 through 2.500 guns, the det cord may be cut 1.250 inch shorter than shown to minimize swelling of the Top Sub thread and seal diameter. This will place the Bi-Directional Booster 1.250 inch deep inside the Booster Support Tube which locates it further from the detonator. Care must be taken to ensure the Bi-Directional Booster is properly located during assembly.*

6.7 To load the charges, start at the Load End of the tube strip and insert a charge through the large hole until the det cord grooves of the charge sticks out through the small hole (you may need to rotate the charge so that the det cord groove aligns with the path of the det cord). Secure in place by using the bend tab on the tube strip. The charge should not be able to move side to side. Continue to load the required charges to complete the tube strip.

Note: *Insert only the number of charges that you need loaded. The tube strip can be fully or partially loaded.*

6.8 Make a clean and squared-off cut of the det cord 3/8 in to 7/16 in (.95 cm to 1.1 cm) from the face of the Alignment Pin End Plate. If using Owen Super Cutters, place the cutter head against the End Plate to make the cut.

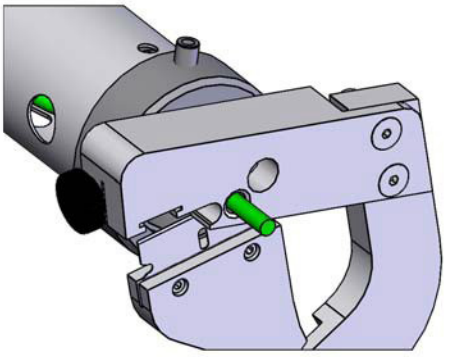

6.9 Carefully remove the End Plate without disturbing the cut.

6.10 Crimp a Bi-directional Booster on the det cord. Insert the boostered cord through the End Plate, then secure the End Plate to the tube strip using the 2 Cap Screws.

6.11 With the End Plate secured to the tube strip, slide the rubber grommet over the end of Booster up to the End Plate. Thread the Booster Retainer (provided with the Booster Transfer Kit) into the End Plate compressing the rubber grommet, making sure that the Booster stays against the internal stop of the Booster Retainer and tighten firmly.

©2007, 2018 Owen Oil Tools All rights reserved

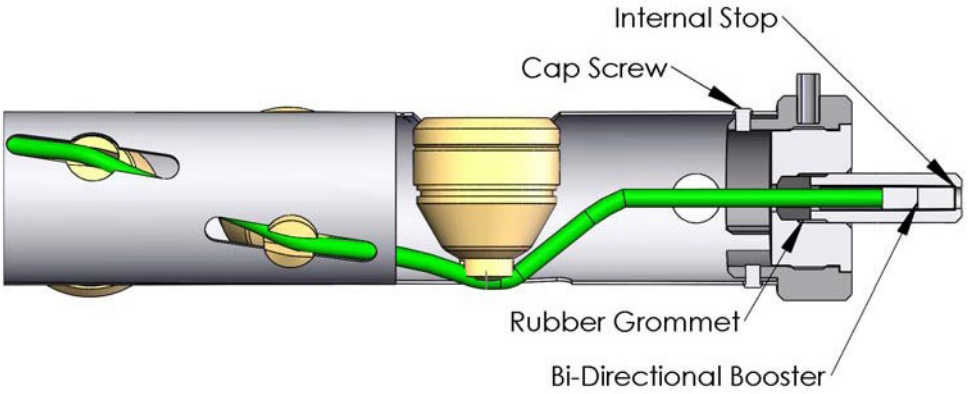

Note: *If the gun is used as a bottom gun, it is still recommended to use a Booster (even if you use a loaded tube strip as a bottom gun and a bottom Booster is not needed for the explosive transfer). Operational plans often change at the last minute and additional guns may need to be added to the bottom gun.*

6.12 The fully loaded internal wrap style tube strip is now complete and is ready to be installed in its accompanying carrier. The installation of the tube strip is covered in section 9.0.

7.0 Internal Wrap, Non-Boostered Connections

Note: *For the purpose of this manual the Locking Ball End will be referred to as the Load end.*

The detonating cord on this style, is placed on the inside of the tube strip and spirals around, connecting the charges forming the explosive sequence. Do not to remove the endplates at this time.

Note: *With the internal wrap style tube strip, the det cord is held in place by the charge and tube strip (no Det Cord Clips are required).*

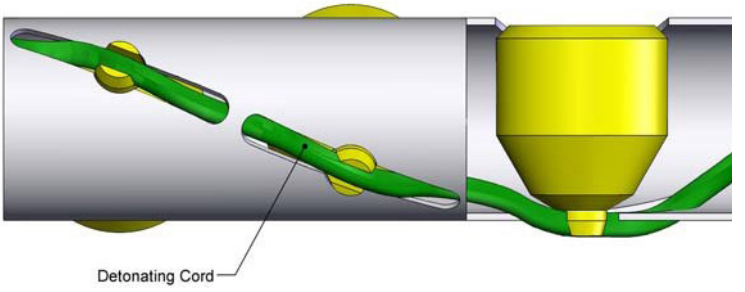

7.1 Install the End Plate Inserts and use a locking compound on the insert threads.

©2007, 2018 Owen Oil Tools All rights reserved

MAN-TGS1-000.indd 17 10/5/18 1:16 PM

7.2 Next, using Owen Super Cutters, cut a sufficient length of det cord that will completely load your tube strip and that will allow for det cord initiation. One method of doing this, is to wrap the det cord around the tube strip following the charge holes. Take that length and add 3 - 4 ft (0.9 - 1.2m). It is always better to have too much, than not enough.

Note: *To determine the next length of det cord to be cut, measure the first cut length before loading, then measure the scrap length when finished. Subtract the scrap length from the original cut length to determine the length of the next piece of det cord.*

STOP

Warning: ***Never load a tube strip when the det cord is still attached to the roll! Cut the necessary length of cord, then remove the roll from the loading area!***

7.3 Place the det cord through the tube strip and through both End Plates.

Note: *To help run the cord through the tube strip, use a non-sparking Fish Tape or Fish Tape Leader (used by electricians and plumbers). Insert the fish tape through tube strip and attach det cord to its end using electrical tape. Withdraw the fish tape, pulling det cord through tube strip. Be careful not to scrape the outer covering of the cord as the fish tape is retracted.*

7.4 Make a clean, squared-off cut on the end of the det cord by using an Owen Super Cutters tool.

7.5 Visually inspect the cut, then install the proper end seal over the end of the det cord and crimp in place by using Owen Super Crimpers.

7.6 Make sure enough det cord sticks out for your operational requirements

7.7 To load the charges, start at the Load end of the tube strip and insert a charge through the large hole until the det cord grooves of the charge sticks out through the small hole (you may need to rotate the charge so that the det cord groove aligns with the path of the det cord). Secure in place by using the bend tab on the tube strip. The charge should not be able to move side to side. Continue to load the required charges to complete the tube strip.

©2007, 2018 Owen Oil Tools All rights reserved

MAN-TGS1-000.indd 18 10/5/18 1:16 PM

Note: *Insert only the number of charges that you need loaded. The tube strip can be fully or partially loaded.*

7.8 Make a clean and squared-off cut of the det cord 3/8 in. to 7/16 in. (.95 cm to 1.1 cm) from the face of the Pinned End Plate.

7.9 Crimp an end seal on the det cord.

7.10 The fully loaded internal wrap style tube strip is now complete and is ready to be installed in its accompanying carrier. The installation of the tube strip is covered in section 9.0.

8.0 Internal Weave, Boostered Connections

Note: *For the purposes of this manual the Locking Ball End will be referred to as the Load end. This way the Booster Support Tube is on the Locking Ball End Plate and will be inserted first into the carrier after loading. This will help protect the long Support Tube from breaking during handling.*

The detonating cord on this style, is placed on the inside of the tube strip and weaves from charge to charge to form the explosive sequence.

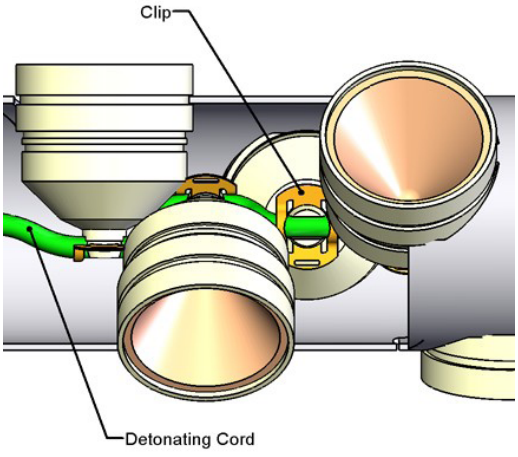

Note: *Owen recommends installing a Det Cord Clip on every charge. For 12 to 18 spf loaded tubes where there is not enough space to install the clips, only install clips on the first and last charges in the tube.*

©2007, 2018 Owen Oil Tools All rights reserved

MAN-TGS1-000.indd 19 10/5/18 1:16 PM

8.1 Using Owen Super Cutters, cut a sufficient length of det cord that will completely load your tube strip and that will allow for the Transfer Tube. One method of doing this, is to add 3-4 ft (0.9 - 1.2m) to the length of the tube strip. It is always better to have too much, than not enough.

Note: *To determine the next length of det cord to be cut, measure the first cut length before loading, then measure the scrap length when finished. Subtract the scrap length from the original cut length to determine the length of the next piece of det cord.*

STOP **Warning:** ***Never load a tube strip when the det cord is still attached to the roll! Cut the necessary length of cord, then remove the roll from the loading area!***

8.2 Place the det cord on the inside of the tube strip and through both End Plates.

Note: *To help run the cord through the tube strip, use a non-sparking Fish Tape or Fish Tape Leader (used by electricians and plumbers). Insert fish tape through tube strip and attach det cord to its end using electrical tape, then withdraw fish tape, pulling det cord through tube strip. Be careful not to scrape the outer covering of the cord as the fish tape is retracted.*

8.3 Make a clean, squared-off cut to the end of the det cord by using an Owen Super Cutters tool.

8.4 Visually inspect the cut, then install the proper Bi-directional Booster over end of det cord and crimp in place by using Owen Super Crimpers.

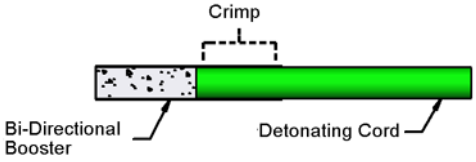

8.5 Insert the crimped Booster and cord through the center hole in the Locking Ball End Plate/ insert until approximately 10 in (25 cm) sticks out. Slide the Rubber Grommet (provided in the Booster Transfer Kit) over end of cord until it's against the End Plate. Slide the Booster Support Tube (provided in the Booster Transfer Kit) over the cord and thread into End Plate. This will push the rubber grommet into the threaded recess. As you thread in the tube, position the end of the Booster flush with the top of the Support Tube. Tighten firmly by hand to compress the rubber grommet around the det cord.

©2007, 2018 Owen Oil Tools All rights reserved

MAN-TGS1-000.indd 20 10/5/18 1:16 PM

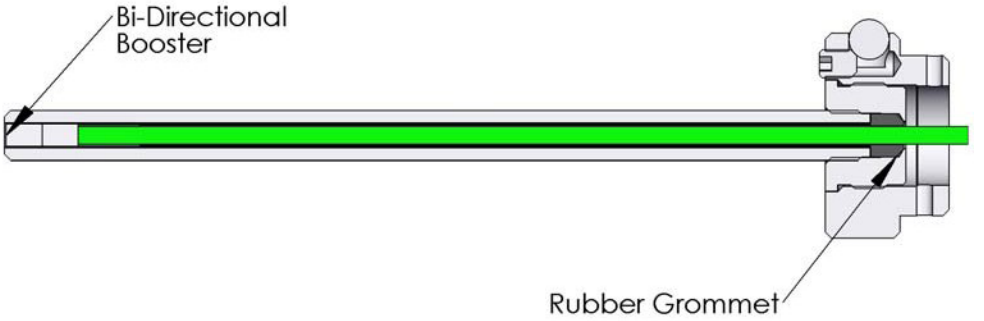

8.6 Starting with the first charge on the Load End, insert it in the tube strip hole with the cord slot on the charge straddling the det cord. Install a Det Cord Clip over the cord and charge prongs, snapping in place. Allow a little slack in cord so when fully seated in tube strip, the cord is not stretched or in tension.

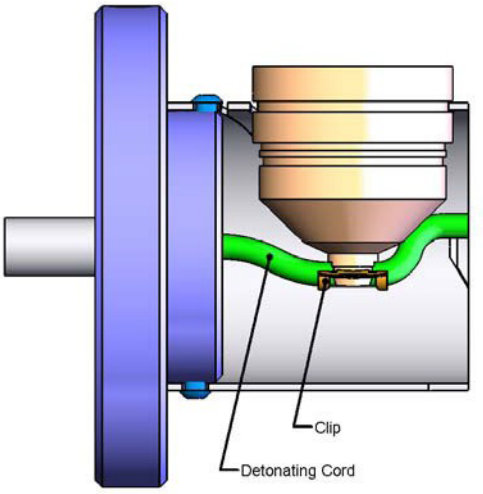

8.7 Once the charge is seated, slide the charge groove onto the stationary tab of the tube strip hole and secured it in place using either the bend tab or with the provided Pop Rivets.

8.8 Proceed to the next charge in the explosive sequence, repeating steps 7.6 and 7.7.

Note: *Owen recommends installing a Det Cord Clip on every charge. For the 12 to 18 spf loaded tubes where there is not enough space to install the clips, only install on the first and last charges in the tube.*

8.9 With the tube strip fully loaded and all of the charges clipped and locked in place, proceed with boostering.

8.10 After securing the det cord in the last charge at the Alignment Pin End of the tube strip, insert it through the Pinned End Plate.

©2007, 2018 Owen Oil Tools All rights reserved

MAN-TGS1-000.indd 21 10/5/18 1:16 PM

8.11 Make a clean and squared-off cut of the det cord 3/8 in to 7/16 in (.95 cm to 1.1 cm) from the face of the End Plate. If using Owen Super Cutters, place the cutter head against the End Plate to make the cut.

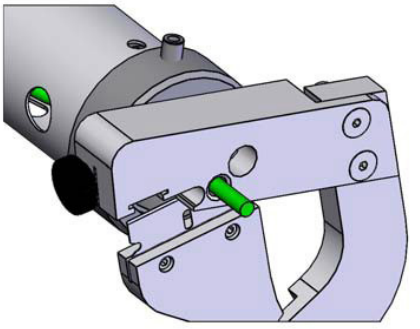

8.12 Carefully remove the End Plate without disturbing the cut.

8.13 Crimp a Bi-directional Booster on the det cord. Insert the boostered cord through the End Plate and secure to the tube strip using the 2 Cap Screws.

8.14 With the End Plate secured to the tube strip, slide the rubber grommet over the end of Booster up to the End Plate. Thread the Booster Retainer (provided with transfer kit) into the End Plate compressing the rubber grommet, making sure that the Booster stays against the internal stop of the Booster Retainer and tighten firmly.

Note: *If the gun is used as a bottom gun, it is still recommended to use a Booster (even if you use a loaded tube strip as a bottom gun and a bottom Booster is not needed for the explosive transfer). Operational plans often change at the last minute and additional guns may need to be added to the bottom gun.*

8.15 The fully loaded Internal Weave style tube strip is now complete and ready to be installed in its accompanying carrier. The installation of the tube strip is covered in section 9.

9.0 Internal Weave, Non-Boostered Connections

Note: *For the purposes of this manual the Locking Ball end will be referred to as the Load end.*

The detonating cord on this style, is placed on the inside of the tube strip and weaves from charge to charge to form the explosive sequence.

©2007, 2018 Owen Oil Tools All rights reserved

MAN-TGS1-000.indd 22 10/5/18 1:16 PM

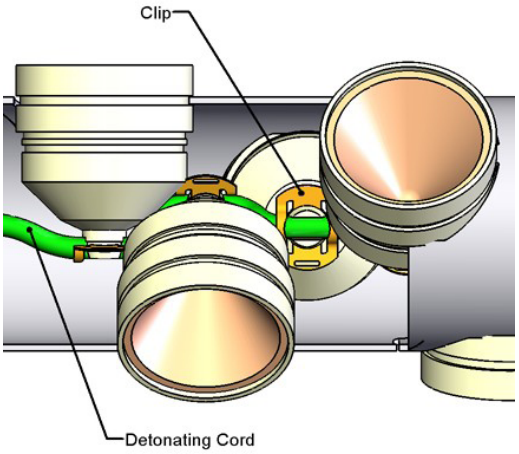

Note: *Owen recommends installing a Det Cord Clip on every charge. For the 12 to 18 spf loaded tubes where there is not enough space to install the clips, only install on the first and last charges in the tube.*

9.1 Using Owen Super Cutters, cut a sufficient length of det cord that will completely load your tube strip and that will allow for the Transfer Tube. One method of doing this, is to add 3-4 ft (0.9 - 1.2m) to the length of the tube strip. It is always better to have too much, than not enough.

Note: *Measure the cut length before loading, then measure the scrap length when finished. This will help determine the next piece of det cord to be cut.*

STOP

Warning: ***Never load a tube strip when the det cord is still attached to the roll! Cut the necessary length of cord, then remove the roll from the loading area!***

9.2 Place the det cord on the inside of the tube strip and through both End Plates.

Note: *To help run the cord through the tube strip, use a non-sparking Fish Tape or Fish Tape Leader (used by electricians and plumbers). Insert fish tape through tube strip and attach det cord to its end using electrical tape, then withdraw fish tape, pulling det cord through tube strip. Be careful not to scrape the outer covering of the cord as the fish tape is retracted.*

©2007, 2018 Owen Oil Tools All rights reserved

MAN-TGS1-000.indd 23 10/5/18 1:16 PM

9.3 Based on your operational requirements, make a clean, squared-off cut to the end of the det cord by using an Owen Super Cutters tool.

9.4 Visually inspect the cut, then install the proper end seal over end of det cord and crimp in place by using Owen Super Crimpers.

9.5 Starting with the first or top charge on the Load End, insert it into the tube strip hole with the cord slot on the charge straddling the det cord. Install a Det Cord Clip over the cord and charge prongs, snapping in place. Allow a little slack in cord so when fully seated in tube strip, the cord is not stretched or in tension.

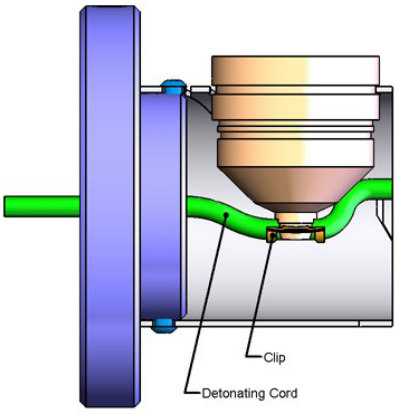

9.6 Once the charge is seated, slide the charge groove onto the stationary tab of the tube strip hole and secured it in place using either the bend tab or with the provided Pop Rivets.

9.7 Proceed to the next charge in the explosive sequence, repeating steps 8.6 and 8.7.

Note: *Owen recommends installing a Det Cord Clip on every charge. For the 12 to 18 spf loaded tubes where there is not enough space to install the clips, only install on the first and last charges in the tube.*

9.8 Make a clean and squared-off cut of the det cord.

9.9 Crimp an end seal on the det cord.

9.10 The fully loaded Internal Weave style tube strip is now complete and ready to be installed in its accompanying carrier. The installation of the tube strip is covered in the next section.

©2007, 2018 Owen Oil Tools All rights reserved

MAN-TGS1-000.indd 24 10/5/18 1:16 PM

10.0 Installation of a Loaded Tube Strip

The carrier to be loaded must be on sturdy supports and be at an elevation of such to make inserting the loaded tube strip easy and safe.

10.1 The opening of the Snap Ring should be positioned so that it aligns with the scallop of the last charge Load end so that the Locking Ball set screw on the End Plate will be accessible.

10.2 Lift the loaded tube strip from the loading bench and carry it to the accompanying carrier. Use as many people as necessary to safely handle the tube strip.

Note: *Owen recommends that a minimum of 2 - 3 people be present when moving/handling guns over 10 ft long. Personnel should be evenly distributed along the gun's length when moving/handling.*

Warning: ***A loaded tube strip can be very heavy, especially the larger diameter tube strips, and must be handled accordingly to prevent personal injury, dropping or bending the tube strip!***

Caution: ***Do not damage or break the Booster Transfer Tube (if applicable), during insertion! Do not pinch the det cord or Booster during insertion!***

10.3 Be sure that the ball is still disengaged. Insert the tube strip Load End first into the carrier. The pinned End Plate must go in last.

Warning: ***For non-boostered connections, use a non-sparking Fish Tape or Fish Tape Leader to prevent the tube strip from crushing or binding the det cord while inserting!***

10.4 Slowly slide the loaded tube strip into the carrier. Be careful not to cause any damage to the components of the loaded tube strip.

Note: *When inserting the tube strip; line up the top and bottom charges with their corresponding scallops on the carrier. This will minimize the alignment rotation of the tube strip, while inserting.*

©2007, 2018 Owen Oil Tools All rights reserved

MAN-TGS1-000.indd 25 10/5/18 1:16 PM

Warning: ***If any difficulty is encountered while inserting the tube strip, STOP and check for the cause of the difficulty! If necessary, pull the tube strip back out of the carrier and determine the problem! Never beat or force a loaded tube strip into a carrier!***

10.5 Orient the Endplates alignment pin to the keyway in the carrier. Use the Alignment Tool (set into the endplates) to push the tube strip into the carrier until the opposing endplate contacts the Snap Ring. This tool was specially designed to avoid contact with the bottom Booster and Booster Retainer.

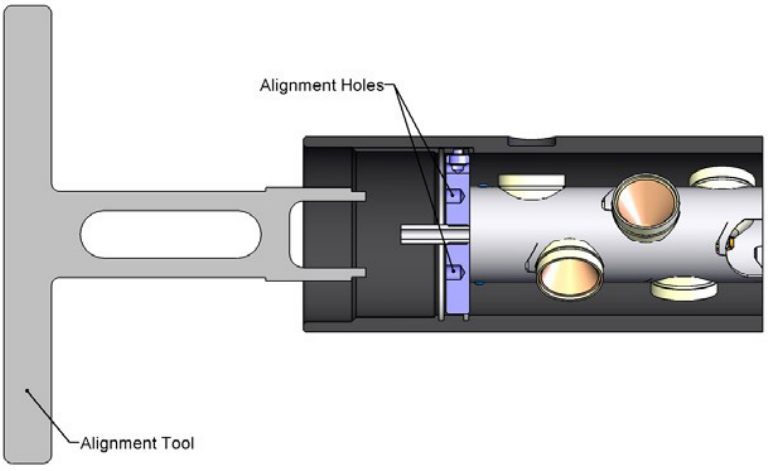

10.6 With the End Plate against the Snap Ring, tighten the Locking Ball Set Screw until the ball is against the inside of the carrier. Do not over tighten. On long gun systems the orientation of the Endplates must be checked. It may be necessary to use the Alignment Tool to orient the Endplates to the Keyway prior to tightening the ball.

Note: *The top set screw should be accessible through opening in Snap Ring.*

10.7 Install the bottom Snap Ring. The loaded tube strip is now secured in its scalloped gun carrier.

10.8 The next step is to install the proper Top or Tandem Sub. Place the appropriate size O-rings on the sub, apply grease to threads and O-rings, thread it into carrier and tighten.

©2007, 2018 Owen Oil Tools All rights reserved

MAN-TGS1-000.indd 26 10/5/18 1:16 PM

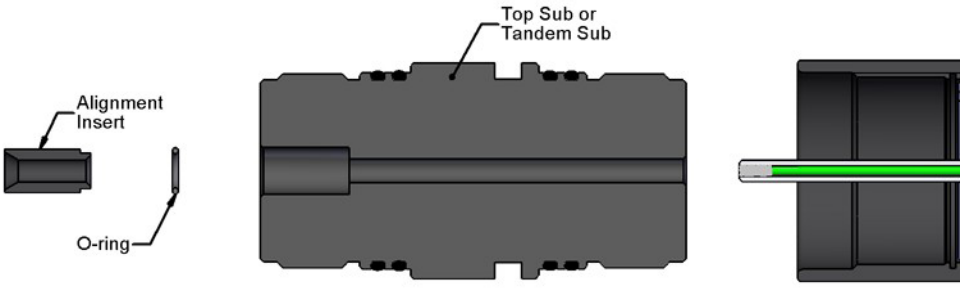

10.9 If a Top or Tandem Sub is being used with boostered connections, install an Alignment Insert and O-ring (provided with the Booster Transfer Kit) into the sub.

Note: *Install all other hardware as applicable.*

10.10 Install tie down subs on both ends of gun carrier as applicable and affix the proper explosives shipping label on the carrier.

10.11 The loaded scalloped gun system is now ready for shipping or transportation.

Note: *Each gun assembly may be run as a blank using the charge tube and endplates supplied as outlined in Section 10.0. However, special order blank guns exceeding 7" length are available as per the catalog page entitled, Tubing Conveyed Transfer - Safety Spacer. These special order blank guns may be run without a charge tube and require snap rings to retain the endplates in position as outlined in Section11.0.*

11.0 Blank Gun Assembly with Charge Tube

The blank gun assembly can be used as either a top gun safety spacer or for spacing between loaded perforating zones. This blank gun uses a charge tube and end plates to retain the det cord within the carrier. Depending on the size of the gun system and charge tube, the blank gun may be assembled per methods previously outlined in this manual. However, the basics steps to assemble a blank gun are as follows.

11.1 Using Owen Super Cutters, cut the det cord to the appropriate length. The length of carrier plus 2 ft (61 cm) should be sufficient. Remove det cord roll from work area.

©2007, 2018 Owen Oil Tools All rights reserved

MAN-TGS1-000.indd 27 10/5/18 1:16 PM

Warning: ***Never load det cord that is still attached to a roll! Cut the necessary length of cord, then remove the roll from the loading area!***

11.2 Remove the charge tube assembly from the carrier, and remove the Locking Ball End Plate from the charge tube assembly. Install the End Plate Insert into the End Plate. Insert the Crimp Tube into threaded recess of the End Plate Insert of the Locking Ball End Plate, so that the flared end of the Crimp Tube is seated in the bottom of the threaded hole.

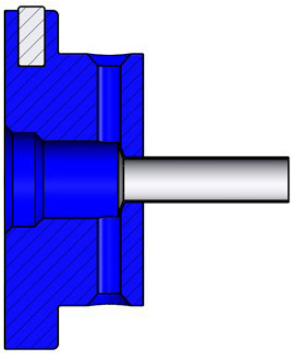

11.3 Do not install a bi-directional Booster at this time, because the Booster will not pass through the crimp tube. Insert the end of the det cord through the crimp tube and out the top of the End Plate so approximately 11 in (24 cm) sticks out.

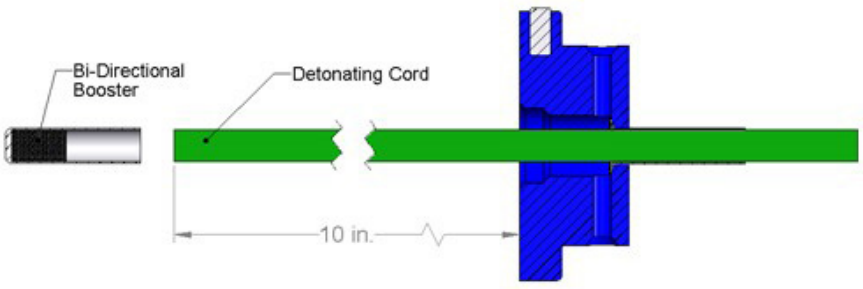

11.4 Make sure the end of your cord is squared-off and clean, then install the proper Bi- directional Booster over end of det cord and crimp in place by using Owen Super Crimpers.

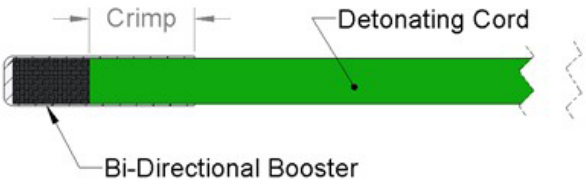

©2007, 2018 Owen Oil Tools All rights reserved

MAN-TGS1-000.indd 28 10/5/18 1:16 PM

11.5 Slide the Rubber Grommet (provided in the Blank Spacer Kit) over the end of cord until it's against the End Plate. Slide the Booster Support Tube (provided in the Blank Spacer Kit) over the cord and thread into the End Plate. This will push the Rubber Grommet into the threaded recess. As you thread the tube into the End Plate, position the end of the Booster flush with the top of the support tube. Tighten firmly by hand to compress the rubber grommet around the det cord.

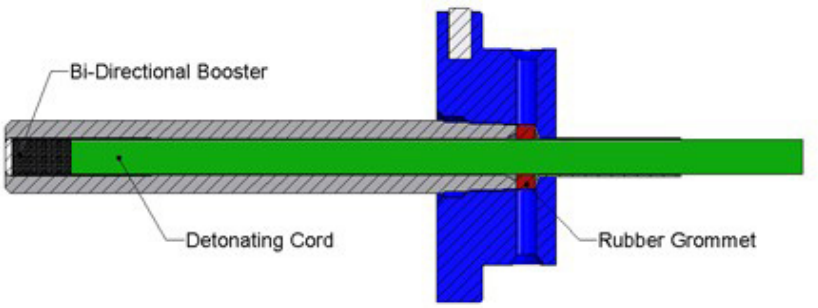

11.6 With the support tube firmly tightened and the Booster flush with the end of the tube, crimp the crimp tube onto the det cord using Owen Super Crimpers. This will help support the weight of the det cord when the charge tube assembly is in the vertical position.

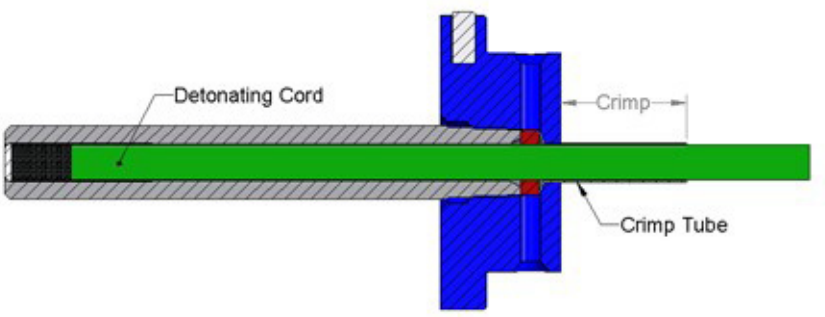

11.7 Feed the loose end of the det cord through the entire length of the tube assembly until the Locking Ball End Plate is able to be screwed into place on the tube strip, then secure the End Plate to the tube strip.

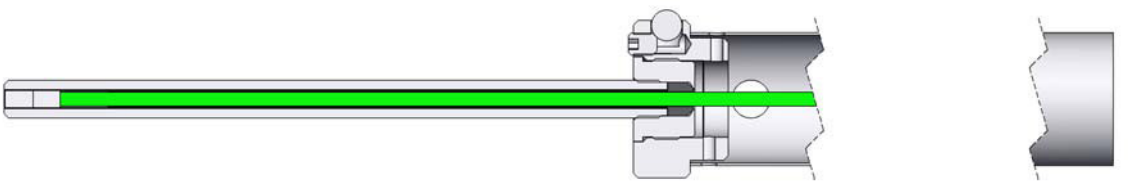

11.8 On the Alignment Pin End of the tube assembly, pull the excess cord through the End Plate and then install the End Plate insert.

©2007, 2018 Owen Oil Tools All rights reserved

MAN-TGS1-000.indd 29 10/5/18 1:16 PM

Note: *The det cord will not be pulled taut, and any excess should be inside the tube strip to account for shrinkage.*

11.9 Make sure the end of your cord is squared-off and clean, then install the proper Bi- directional Booster over the end of the det cord and crimp in place using Owen Super Crimpers.

11.10 Slide the Rubber Grommet over the end of the cord until it's against the insert in the End Plate. Slide the Booster Retainer over the cord and thread into the End Plate. This will push the Rubber Grommet into the threaded recess. Make sure that the Rubber Grommet has been compressed enough, so that the Booster stays against the internal stop of the Booster Retainer and tighten firmly by hand.

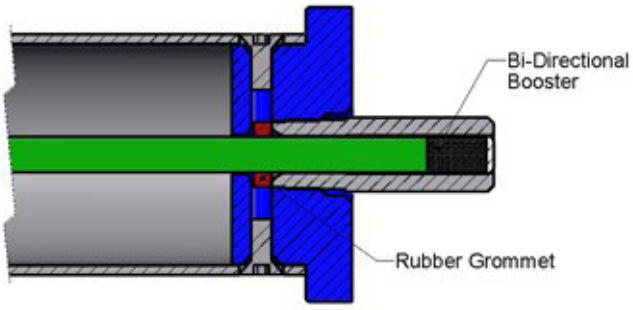

11.11 Load the tube assembly Load End first into the load end of the corresponding carrier. Using the alignment tool, rotate the assembly until the Pinned End Plate lines up with the broach in the carrier. Once in alignment install the outer Snap Ring.

11.12 The next step is to install the proper Top or Tandem Sub. Place the appropriate size O-rings on the sub, apply grease to threads and O-rings and thread into carrier; tighten.

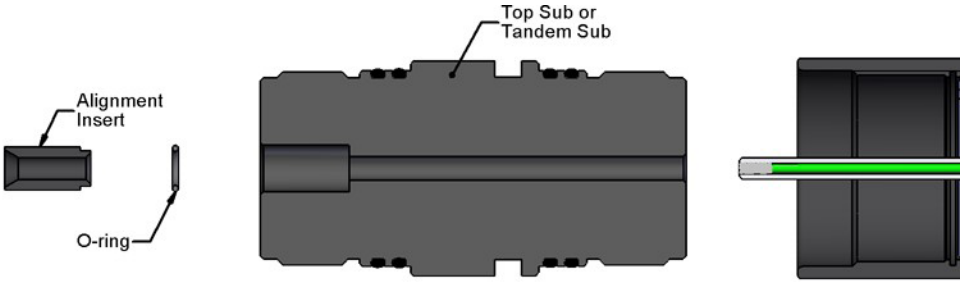

11.13 If a Top or Tandem Sub is being used with boostered connections, install an Alignment Insert and O-ring (provided with the Booster Transfer Kit) into the sub.

©2007, 2018 Owen Oil Tools All rights reserved

MAN-TGS1-000.indd 30 10/5/18 1:16 PM

11.14 Install tie down subs on both ends of the blank gun carrier and affix the proper explosive shipping label to the carrier.

11.15 The Blank Gun Assembly is now ready for shipping or transportation.

12.0 Blank Gun Assembly, Blank Spacer Kit

The blank gun assembly can be used as either a top gun safety spacer or for spacing between loaded perforating zones. This blank gun doesn't use a charge tube because the blank gun End Plates are secured in the carrier by a set of Snap Rings (provided in the Blank Spacer Kit). The carrier used for this assembly does not require scallops on the exterior surface. A blank carrier can be cleaned and reused again. Owen recommends using a blank carrier with the same outside diameter as the perforating guns. This way, all the connections will be the same and no specialized subs or crossovers will be required. The blank carrier lengths are the same as the available gun carriers.

12.1 Using Owen Super Cutters, cut the det cord to the appropriate length. The length of carrier plus 2 ft (61 cm) should be sufficient. Remove det cord roll from work area.

STOP

Warning: ***Never load det cord that is still attached to a roll! Cut the necessary length of cord, then remove the roll from the loading area!***

Note: *Since the blank gun does not use a tube strip to help support the weight of the det cord, a Crimp Tube (provided in Blank Spacer Kit) must be used.*

12.2 Insert the Crimp Tube into threaded recess of the End Plate so that the flared end of the Crimp Tube is seated in the bottom of the threaded hole.

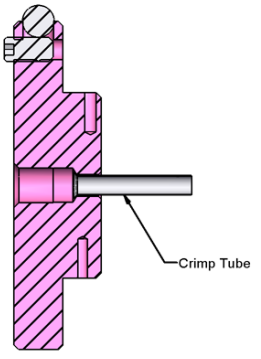

©2007, 2018 Owen Oil Tools All rights reserved

MAN-TGS1-000.indd 31 10/5/18 1:16 PM

12.3 Do not install a bi-directional Booster at this time, because the Booster will not pass through the crimp tube. Insert the end of the det cord through the crimp tube and out the top of the End Plate so approximately 10 in (24 cm) sticks out. Make a clean, squared-off cut to one end of the det cord using Owen Super Cutters.

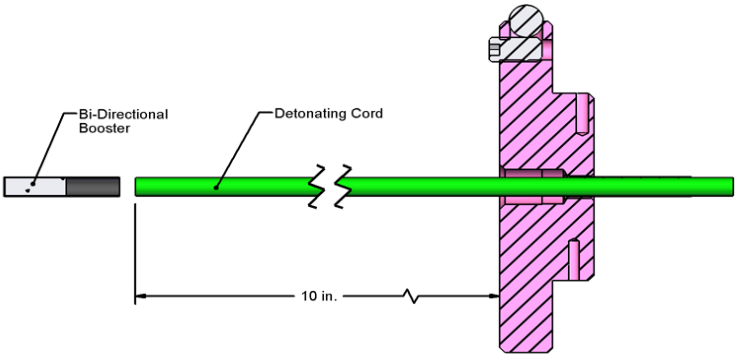

12.4 Make sure the cut is squared-off and clean, then install the proper Bi-directional Booster over end of det cord and crimp in place by using Owen Super Crimpers.

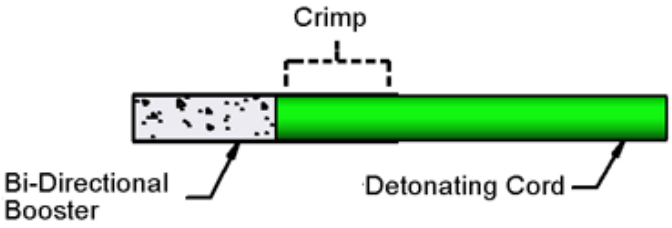

12.5 Slide the Rubber Grommet (provided in the Blank Spacer Kit) over the end of cord until it's against the End Plate. Slide the Booster Support Tube (provided in the Blank Spacer Kit) over the cord and thread into the End Plate. This will push the Rubber Grommet into the threaded recess. As you thread in the tube, position the end of the Booster flush with the top of the support tube. Tighten firmly by hand to compress the rubber grommet around the det cord.

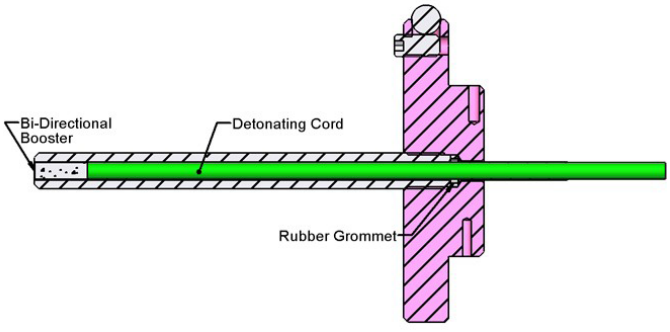

12.6 With the support tube firmly tightened and the Booster flush with the end of the tube, crimp the crimp tube onto the det cord using Owen Super Crimpers. This will help support the weight of the det cord when the blank gun assembly is in the vertical position.

©2007, 2018 Owen Oil Tools All rights reserved

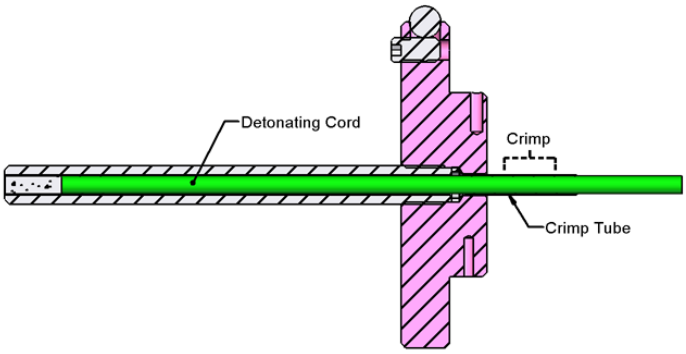

12.7 Install a Snap Ring in the second groove at the Load end of the carrier. Feed the loose end of the det cord (using a non-sparking Fish Tape or Fish Tape Leader) through the entire length of the carrier until you can insert the assembled End Plate against the Snap Ring. Secure in place by threading in the set screw in the End Plate. With the End Plate secured, install a Snap Ring in the outer groove of the carrier.

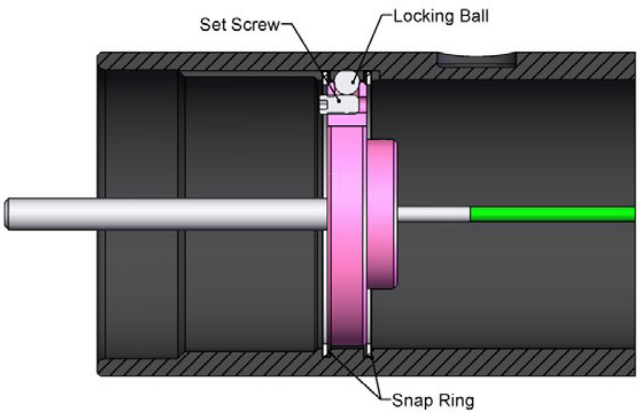

12.8 On the opposite end of the carrier, pull out the excess det cord and then install a Snap Ring in the second groove of the carrier.

12.9 Make a clean, squared-off cut of the det cord, approximately 2 - 3 in (5 - 8 cm) from the edge of the carrier.

12.10 Crimp a Bi-directional Booster on the det cord.

12.11 Insert the boostered cord through the End Plate and slide on a rubber grommet. Thread the Booster Retainer (provided in the Blank Spacer Kit) firmly into the End Plate. Make sure that the rubber grommet has been compressed enough, so that the Booster stays against the internal stop of Booster Retainer and tighten firmly by hand.

©2007, 2018 Owen Oil Tools All rights reserved

MAN-TGS1-000.indd 33 10/5/18 1:16 PM

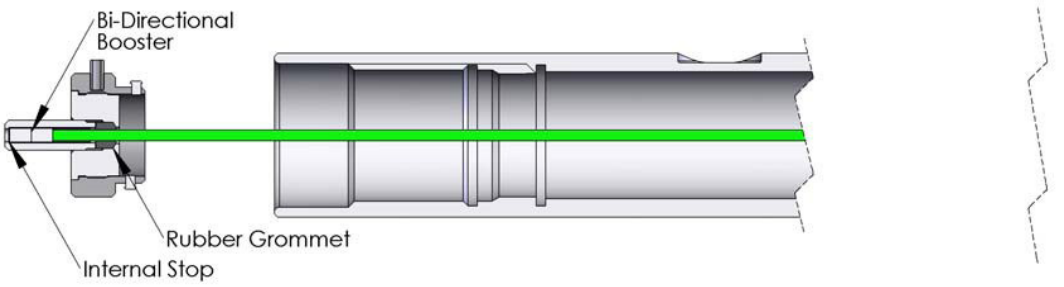

12.12 Using the alignment tool, rotate the End Plate clockwise. This will twist the det cord in the carrier causing the End Plate to pull itself into the carrier up against the Snap Ring.

Caution: ***Only twist enough to pull in the cord! Once in alignment, secure the End Plate with the set screw. Install the outer Snap Ring.***

12.13 The next step is to install the proper Top or Tandem Sub. Place the appropriate size O-rings on the sub, apply grease to threads and O-rings and thread into carrier; tighten.

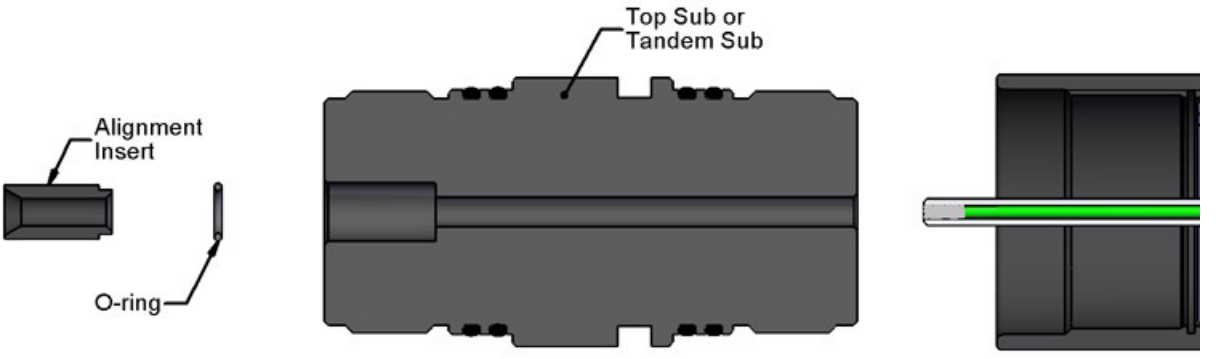

12.14 If a Top or Tandem Sub is being used with boostered connections, install an Alignment Insert and O-ring (provided with the Booster Transfer Kit) into the sub.

12.15 Install tie down subs on both ends of the blank gun carrier and affix the proper explosive shipping label to the carrier.

12.16 The Blank Gun Assembly is now ready for shipping or transportation.

©2007, 2018 Owen Oil Tools All rights reserved

MAN-TGS1-000.indd 34 10/5/18 1:16 PM

©2007, 2018 Owen Oil Tools All rights reserved

MAN-TGS1-000.indd 35 10/5/18 1:16 PM