This section includes updated information, added since it was first published in December 2015.

Section	Last updated
Introduction	06/12/2019
FireCase	08/02/2021
GypLyner ENCASE	16/03/2020

C03

Steel encasements

Steel encasements

This section contains steel encasement systems that provide up to 180 minutes of fire protection to structural steel columns and 120 minutes for structural steel beams and joists

Steel encasements

Passive fire protection is a vital component of any fire safety strategy. It safeguards people's lives and limits the financial impact of damage to buildings and their contents. The protection of the superstructure from fire is especially important, as once its integrity is compromised, the whole building's stability will be at risk.

We have two types of solution:

- **FireCase** – C03. S02. P02
  A frameless structural steel encasement where the board linings are fixed to themselves to minimise space intrusion. The system can be used in buildings before they are fully watertight to improve speed of project handover
- **GypLyner ENCASE** – C03. S03. P02
  A metal framed structural steel encasement system for greater flexibility of installation

Each system section takes you through the process of selecting the required lining type and thickness to provide a range of standard structural steel beam, column and joist sizes with the fire protection level needed.

Both systems are able to accept standard methods of finishing; tape and joint or Thistle skim plaster, to aesthetically match surrounding elements. An aesthetic finish is not necessary with the **FireCase** system to maintain its fire performance.

You may also be interested in...

If you need to protect structual steel within the cavity,

▶ Refer to **GypWall QUIET** C04. S07. P02 or **GypWall QUIET IWL** C04. S08. P02

Steel encasements

Areas to consider when specifying

Unlike some alternative fire protection technologies, for example intumescent paint, our encasement systems will give acoustic benefits by reducing sound transmission through the steelwork. Further improvements can be made to the sound insulation performance by the inclusion of Isover insulation within the system, and by modifying the abutment detailing to reduce flanking sound transmission.

▶ Refer to figure 1.

Using FireCase or GypLyner ENCASE could therefore offer both savings and simplification over alternative fire protection technologies that may require overboarding.

Thickness of applied fire protection

Glasroc F FIRECASE and Gyproc plasterboards are manufactured to stringent factory tolerances, giving the client peace of mind that the correct thickness of fire protection has been applied, ensuring life safety in the event of a fire.

Benefits to compartmentation

Using the FireCase or the GypLyner ENCASE systems will eliminate any potential problems with compartmentation. Unlike some alternative fire protection technologies, e.g. paint, using the FireCase or GypLyner ENCASE systems will ensure that there are no potential problems with insulation failure through the steelwork.

▶ Refer to figure 2.

All year round installation

Glasroc F FIRECASE and Gyproc plasterboards have an operational tolerance from below freezing to +49°C, whereas some alternative technologies are often +5°C to +30°C. This ensures that there are no potential problems with the build program in UK winter conditions.

Building programme efficiencies

The FireCase and GypLyner ENCASE systems allow other trades to work in close proximity and simultaneously. Some alternative technologies require areas of the site to be closed off due to the containment of overspray and fumes.

Ease of maintenance

Using the Regulatory Reform (fire safety) Order (RRO) the responsible person has duty of care for maintaining the buildings fire protection systems. The FireCase and GypLyner ENCASE systems are robust but should damage occur it is easy to identify and simple to repair or replace, making management and maintenance simple for building owners.

Additional information

Try out The White Book System Selector, an online tool designed to help find the ideal solutions for your project needs. Visit british-gypsum.com

Steel encasements (continued)

1

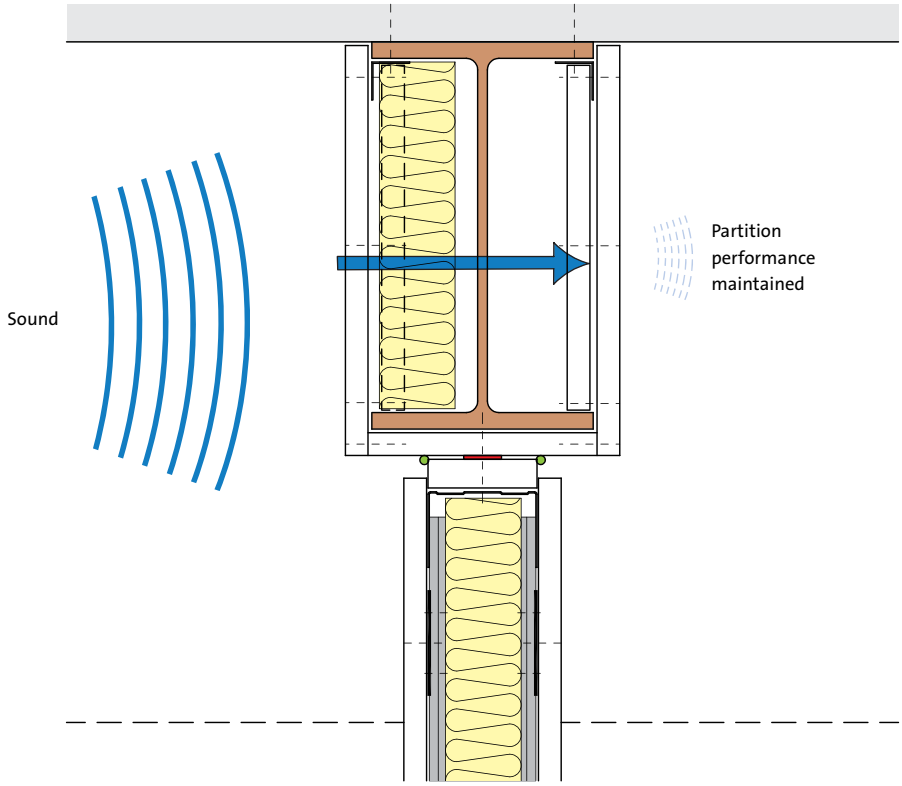

Benefit to acoustics

2

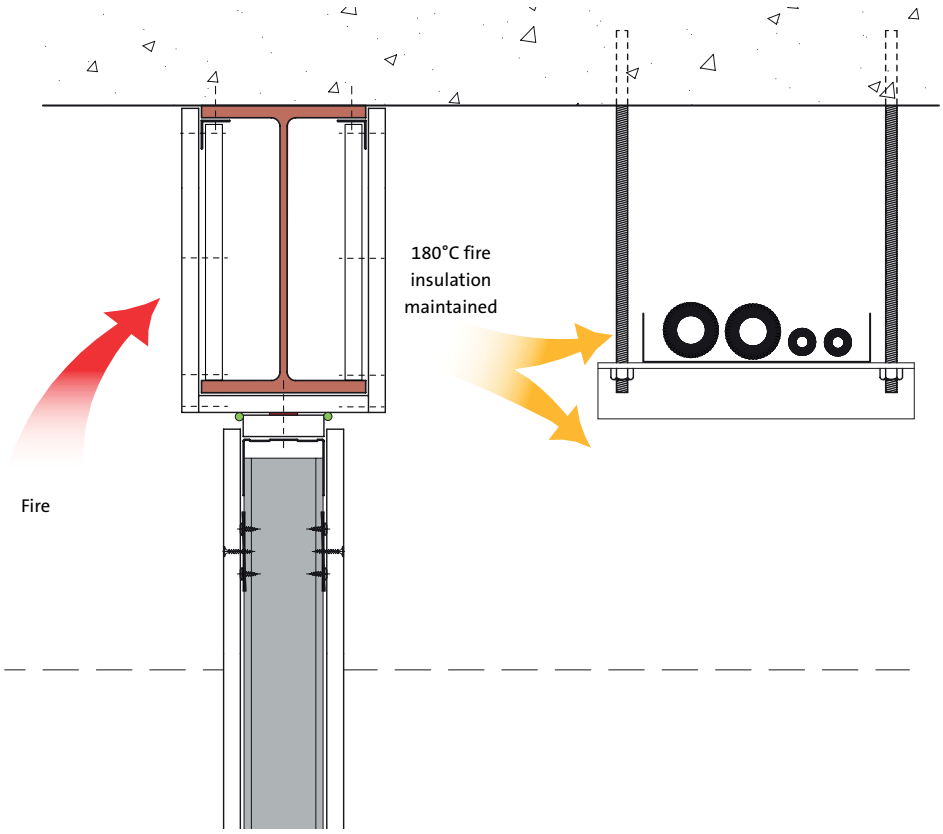

Benefits of compartmentation

FireCase

Frameless structural steel encasement system that provides up to 120 minutes fire protection

SPECSURE Lifetime System Warranty

All our systems are covered by SpecSure® when using genuine British Gypsum and Saint-Gobain Isover products

FireCase

FireCase is a frameless structural steel encasement system that provides up to 120 minutes fire protection to a wide range of universal beam, column and joist sizes. Installation is quick and easy owing to the ability to fix Glasroc F FIRECASE boards to one another without the need for additional framing.

The Glasroc F FIRECASE lining provides a smooth, robust surface with no requirement to joint or apply a decorative treatment.

30 – 120 mins

SPECSURE Lifetime System Warranty

Refer to C01. S01. P07

ACTIV air

System can be skim finished with ThistlePro PureFinish.
Refer to C02. S01. P49

Key benefits

- Frameless system that minimises the space needed to provide fire protection to structural steel
- Reduced installation time as Glasroc F FIRECASE boards can be screw-fixed to one another without the need for other components
- Build-programme flexibility and earlier installation as the inherent moisture resistance capability of Glasroc F FIRECASE means that installation of the **FireCase** system can commence before the building envelope is fully weather tight
- **FireCase** system is easy to inspect for continuity when compared to intumescent paint solutions, giving greater peace of mind both immediately after installation and during maintenance inspections
- Reduced waste and labour onsite as bespoke, pre-cut widths of Glasroc F FIRECASE are available (subject to minimum order quantity)
- High levels of acoustic insulation, in addition to excellent fire protection performance, can be maintained with appropriate detailing to the abutments between **GypWall** partition systems and **FireCase** steel encasements
- British Board of Agrément (BBA) approved *(93/2935)*

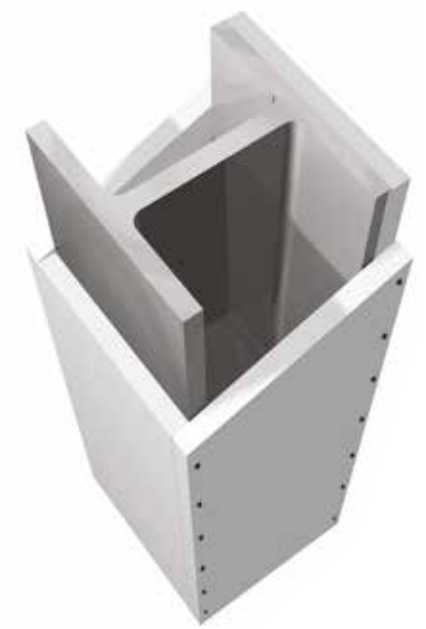

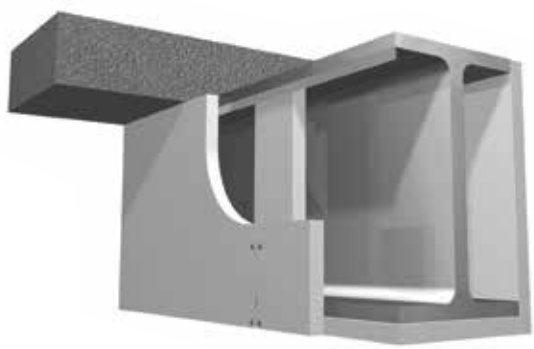

FireCase design

Planning – key factors

FireCase steel encasement is suitable for protecting structural steel sections with a section factor A/V (Hp/A) up to 260m^{-1}, calculated on the basis of box protection to three or four sides as required. It will protect universal column and beam sections described in *BS 4: Part 1*, and many joist sections.

Lining selection

Follow the procedure below to determine the thickness of cladding required:

Option 1
Use tables 2 - 4 to select steel size and fire protection then read off the required board size.

Option 2

1. Ascertain whether protection is required on three or four sides of the section
2. Find out what period of fire protection is required
3. Refer to the A/V (Hp/A) tables 5 - 7. Locate the steel section to be protected, listed by its size and mass per metre, and read off the section factor A/V
4. Refer to tables 8 - 11. Locate the A/V value on the vertical scale on the appropriate table. Read across the chart to the column relating to the period of fire protection required and read off the designated thickness of the relevant cladding required to form the encasement
5. Select the type of board to be using the key below each table

The information in this section is only relevant to solid steel sections. For castellated sections and cellular beams please refer to the Association for Specialist Fire Protection publication, ASFP Yellow Book - 'Fire Protection for Structural Steel in buildings' for guidance, available to download from asfp.org.uk

Partition fixing BS 476 - Part 22 only

Partitions and wall linings may be fixed directly to the Glasroc F FIRECASE cladding as long as:

1. The fire resistance requirement of the partition is 60 minutes or less
2. There are no special requirements for pressure resistance, e.g. around lift shafts
3. There are no special loading requirements, i.e. Heavy Duty or Severe Duty as defined in recognised partition performance specifications (e.g. *BS 5234*)

▶ **Refer to construction detail 9.**

Where these criteria are not met, the partition framing must be suitably fixed to the structural steel section, through the Glasroc F FIRECASE cladding. Where the partition abuts the web of the structural steel, a suitable steel nogging must be provided.

▶ **Refer to construction detail 10.**

Partition to structural steelwork junctions

When designing the layout of rooms requiring separation by sound insulating walls abutting structural steelwork, consideration should be given to the potential loss of sound insulation performance through the steelwork.

Figures 13 to 16 are example details relating to a typical scenario where a partition is specified against a requirement of R_w 50dB. Although these details refer to structural steel column abutments, similar principles apply when abutting structural steel beams. We recommend that these details are checked by an Acoustic Consultant, in particular the performance via the flanking structure.

Finishing

Glasroc F FIRECASE joints can be treated using Gyproc Joint Tape bedded in Gyproc QuickSand Joint Cement. External angles / corners can be reinforced using Gyproc Drywall Metal Angle Bead bedded in Gyproc QuickSand Joint Cement.

▶ **Refer to C08. S03. P02 – Finishes, Jointing.**

If a plaster finish is required, joints should be reinforced and Thistle BoardFinish, ThistlePro DuraFinish or Thistle MultiFinish applied.

▶ **Refer to C08. S02. P02 – Finishes, Plaster skimming and C07. S02. P02 – Linings, Plaster systems.**

Jointing and finishing is not a requirement of meeting the specified fire resistance. Board joints / abutments must be a flush fit.

Important information

- Where steel section web dimensions exceed 600mm, additional support will be required for the cladding. Please contact the British Gypsum Technical Support Team for guidance.
- All joints should be staggered by minimum of 600mm between adjacent boards and between board layers.

FireCase design (continued)

Table 1 – Specialist board fixings

Board thickness (mm)	Minimum fixing length	
	Board-to-board fixing	Board-to-metal fixing
15	40mm Glasroc F FIRECASE Screws	40mm Glasroc F FIRECASE Screws
20	50mm Glasroc F FIRECASE Screws	40mm Glasroc F FIRECASE Screws
25	58mm Glasroc F FIRECASE Screws	40mm Glasroc F FIRECASE Screws
30	70mm Glasroc F FIRECASE Screws	40mm Glasroc F FIRECASE Screws
15 + 20	40mm and 50mm Glasroc F FIRECASE Screws	40mm and 50mm Glasroc F FIRECASE Screws

Important information

Where partitions abut a FireCase column or beam encasement and it is important to minimise the downgrade in acoustic performance, use either:

- Isover insulation within the web space
  - Refer to construction details 14 and 15; or
- Additional framing, Isover insulation and Gyproc plasterboard lining
  - Refer to construction detail 16

FireCase design (continued)

For details of when to specify fire resistance using BS
▶ Refer to **C02. S01. P05**

Table 2 – 550°C chart to *BS 476: Part 20* (following ASFP Yellow Book 3rd Edition appraisal methodology) for selecting the required Glasroc F FIRECASE lining thickness for universal beam sizes

Universal beam serial size of steel (mm x mm x kg/m)			Total Glasroc F FIRECASE board thickness (mm) to achieve fire resistance below[1]							
			3 sided encasement				4 sided encasement			
D	B	Mass/metre	30 min	60 min	90 min	120 min	30 min	60 min	90 min	120 min
1016	305	487	15	15	15	15	15	15	15	15
	305	438	15	15	15	15	15	15	15	15
	305	393	15	15	15	15	15	15	15	15
	305	349	15	15	15	15	15	15	15	15
	305	314	15	15	15	15	15	15	15	15
	305	272	15	15	15	15	15	15	15	20
	305	249	15	15	15	20	15	15	15	20
	305	222	15	15	15	20	15	15	15	20
914	419	388	15	15	15	15	15	15	15	15
	419	343	15	15	15	15	15	15	15	15
	305	289	15	15	15	15	15	15	15	15
	305	253	15	15	15	15	15	15	15	20
	305	224	15	15	15	20	15	15	15	20
	305	201	15	15	15	20	15	15	15	25
838	292	226	15	15	15	20	15	15	15	20
	292	194	15	15	15	20	15	15	15	20
	292	176	15	15	15	20	15	15	15	25
762	267	197	15	15	15	20	15	15	15	20
	267	173	15	15	15	20	15	15	15	25
	267	147	15	15	15	25	15	15	20	30
	267	134	15	15	15	30	15	15	20	30
686	254	170	15	15	15	20	15	15	15	20
	254	152	15	15	15	20	15	15	15	25
	254	140	15	15	15	20	15	15	15	30
	224	125	15	15	15	25	15	15	20	30
610	305	238	15	15	15	15	15	15	15	15
	305	179	15	15	15	20	15	15	15	20
	305	149	15	15	15	20	15	15	15	25
	229	140	15	15	15	20	15	15	15	25
	229	125	15	15	15	20	15	15	15	30
	229	113	15	15	15	25	15	15	20	30
	229	101	15	15	20	30	15	15	20	30
	178	100	15	15	20	30	15	15	20	30
	178	92	15	15	20	30	15	15	20	30
	178	82	15	15	20	30	15	15	20	30
533	312	273	15	15	15	15	15	15	15	15
	312	219	15	15	15	15	15	15	15	15
	312	182	15	15	15	15	15	15	15	20
	312	151	15	15	15	20	15	15	15	20
	210	138	15	15	15	20	15	15	15	20
	210	122	15	15	15	20	15	15	15	25
	210	109	15	15	15	25	15	15	20	30
	210	101	15	15	15	25	15	15	20	30
	210	92	15	15	20	30	15	15	20	30
	210	82	15	15	20	30	15	15	20	30
	165	85	15	15	20	30	15	15	20	30
	165	75	15	15	20	30	15	15	20	30
	165	66	15	15	20	30	15	15	20	30

[1]Glasroc F FIRECASE thickness combinations:

15mm = 1 x 15mm
20mm = 1 x 20mm
25mm = 1 x 25mm
30mm = 2 x 15mm
35mm = 1 x 15mm + 1 x 20mm

System references: D120001 (screwed system)

Beam/column/joist dimension orientation:

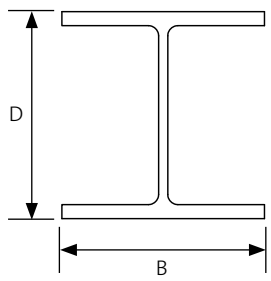

FireCase design (continued)

For details of when to specify fire resistance using BS
▶ Refer to **C02. S01. P05**

Table 2 (continued) – 550°C chart to *BS 476: Part 20* (following ASFP Yellow Book 3rd Edition appraisal methodology) for selecting the required Glasroc F FIRECASE lining thickness for universal beam sizes

Universal beam serial size of steel (mm x mm x kg/m)			Total Glasroc F FIRECASE board thickness (mm) to achieve fire resistance below[1]							
			3 sided encasement				4 sided encasement			
D	B	Mass/metre	30 min	60 min	90 min	120 min	30 min	60 min	90 min	120 min
457	191	161	15	15	15	15	15	15	15	15
	191	133	15	15	15	20	15	15	15	20
	191	106	15	15	15	20	15	15	15	25
	191	98	15	15	15	20	15	15	15	30
	191	89	15	15	15	25	15	15	20	30
	191	82	15	15	15	30	15	15	20	30
	191	74	15	15	20	30	15	15	20	30
	191	67	15	15	20	30	15	15	20	30
	152	82	15	15	15	30	15	15	20	30
	152	74	15	15	20	30	15	15	20	30
	152	67	15	15	20	30	15	15	20	30
	152	60	15	15	20	30	15	15	20	30
	152	52	15	15	20	30	15	15	20	30
406	178	85	15	15	15	25	15	15	20	30
	178	74	15	15	15	30	15	15	20	30
	178	67	15	15	20	30	15	15	20	30
	178	60	15	15	20	30	15	15	20	30
	178	54	15	15	20	30	15	15	20	30
	140	53	15	15	20	30	15	15	20	30
	140	46	15	15	20	30	15	15	25	30
	140	39	15	15	25	30	15	15	25	30
356	171	67	15	15	15	30	15	15	20	30
	171	57	15	15	20	30	15	15	20	30
	171	51	15	15	20	30	15	15	20	30
	171	45	15	15	20	30	15	15	20	30
	127	39	15	15	20	30	15	15	25	30
	127	33	15	15	25	30	15	15	25	30
305	165	54	15	15	20	30	15	15	20	30
	165	46	15	15	20	30	15	15	20	30
	165	40	15	15	20	30	15	15	25	30
	127	48	15	15	20	30	15	15	20	30
	127	42	15	15	20	30	15	15	20	30
	127	37	15	15	20	30	15	15	20	30
	102	33	15	15	20	30	15	15	25	30
	102	28	15	15	25	30	15	15	25	30
	102	25	15	15	25	30	15	15	25	35
254	146	43	15	15	20	30	15	15	20	30
	146	37	15	15	20	30	15	15	20	30
	146	31	15	15	20	30	15	15	25	30
	102	28	15	15	20	30	15	15	25	30
	102	25	15	15	25	30	15	15	25	30
	102	22	15	15	25	30	15	15	25	35
203	133	30	15	15	20	30	15	15	20	30
	133	25	15	15	20	30	15	15	25	30
	102	23	15	15	20	30	15	15	25	30
178	102	19	15	15	25	30	15	15	25	30
152	89	16	15	15	25	30	15	15	25	30
127	76	13	15	15	25	30	15	15	25	30

[1]Glasroc F FIRECASE thickness combinations:

15mm = 1 x 15mm
20mm = 1 x 20mm
25mm = 1 x 25mm
30mm = 2 x 15mm
35mm = 1 x 15mm + 1 x 20mm

System references: D120001 (screwed system)

Beam/column/joist dimension orientation:

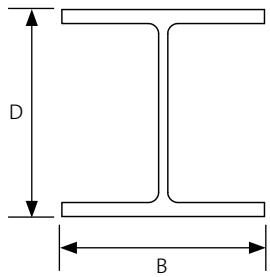

FireCase design (continued)

For details of when to specify fire resistance using BS
▶ Refer to **C02. S01. P05**

Table 3 – 550°C chart to *BS 476: Part 20* (following ASFP Yellow Book 3rd Edition appraisal methodology) for selecting the required Glasroc F FIRECASE lining thickness for universal column sizes

Universal column serial size of steel (mm x mm x kg/m)			Total Glasroc F FIRECASE board thickness (mm) to achieve fire resistance below[1]							
			3 sided encasement				4 sided encasement			
D	B	Mass/metre	30 min	60 min	90 min	120 min	30 min	60 min	90 min	120 min
356	406	634	15	15	15	15	15	15	15	15
	406	551	15	15	15	15	15	15	15	15
	406	467	15	15	15	15	15	15	15	15
	406	393	15	15	15	15	15	15	15	15
	406	340	15	15	15	15	15	15	15	15
	406	287	15	15	15	15	15	15	15	15
	406	235	15	15	15	15	15	15	15	15
	368	202	15	15	15	15	15	15	15	15
	368	177	15	15	15	15	15	15	15	15
	368	153	15	15	15	15	15	15	15	20
	368	129	15	15	15	15	15	15	15	20
305	305	283	15	15	15	15	15	15	15	15
	305	240	15	15	15	15	15	15	15	15
	305	198	15	15	15	15	15	15	15	15
	305	158	15	15	15	15	15	15	15	15
	305	137	15	15	15	15	15	15	15	20
	305	118	15	15	15	15	15	15	15	20
	305	97	15	15	15	20	15	15	15	25
254	254	167	15	15	15	15	15	15	15	15
	254	132	15	15	15	15	15	15	15	15
	254	107	15	15	15	15	15	15	15	20
	254	89	15	15	15	20	15	15	15	20
	254	73	15	15	15	20	15	15	20	30
203	203	127	15	15	15	15	15	15	15	15
	203	113	15	15	15	15	15	15	15	15
	203	100	15	15	15	15	15	15	15	20
	203	86	15	15	15	15	15	15	15	20
	203	71	15	15	15	20	15	15	15	25
	203	60	15	15	15	20	15	15	20	30
	203	52	15	15	15	25	15	15	20	30
	203	46	15	15	15	30	15	15	20	30
152	152	51	15	15	15	20	15	15	15	25
	152	44	15	15	15	20	15	15	20	30
	152	37	15	15	15	25	15	15	20	30
	152	30	15	15	20	30	15	15	20	30
	152	23	15	15	20	30	15	15	25	30

[1]Glasroc F FIRECASE thickness combinations:

15mm = 1 x 15mm
20mm = 1 x 20mm
25mm = 1 x 25mm
30mm = 1 x 30mm [2]
35mm = 1 x 15mm + 1 x 20mm

System references: D120001 (screwed system)

Beam/column/joist dimension orientation:

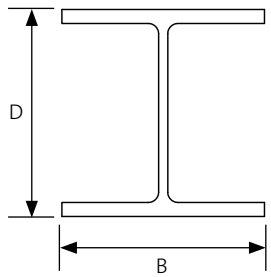

[2] For steel used in a vertical orientation i.e. columns, either 1 x 30mm or 2 x 15mm may be used. For steel used in a horizontal orientation i.e. beams, 2 x 15mm should be used.

FireCase design (continued)

For details of when to specify fire resistance using BS
▶ Refer to **C02. S01. P05**

Table 4 – 550°C chart to *BS 476: Part 20* (following ASFP Yellow Book 3rd Edition appraisal methodology) for selecting the required Glasroc F FIRECASE lining thickness for universal joist sizes

Universal joist serial size of steel (mm x mm x kg/m)			Total Glasroc F FIRECASE board thickness (mm) to achieve fire resistance below[1]							
			3 sided encasement				4 sided encasement			
D	B	Mass/metre	30 min	60 min	90 min	120 min	30 min	60 min	90 min	120 min
356	406	634	15	15	15	15	15	15	15	15
	406	551	15	15	15	15	15	15	15	15
	406	467	15	15	15	15	15	15	15	15
	406	393	15	15	15	15	15	15	15	15
	406	340	15	15	15	15	15	15	15	15
	406	287	15	15	15	15	15	15	15	15
	406	235	15	15	15	15	15	15	15	15
	368	202	15	15	15	15	15	15	15	15
	368	177	15	15	15	15	15	15	15	15
	368	153	15	15	15	15	15	15	15	20
	368	129	15	15	15	15	15	15	15	20
305	305	283	15	15	15	15	15	15	15	15
	305	240	15	15	15	15	15	15	15	15
	305	198	15	15	15	15	15	15	15	15
	305	158	15	15	15	15	15	15	15	15
	305	137	15	15	15	15	15	15	15	20
	305	118	15	15	15	15	15	15	15	20
	305	97	15	15	15	20	15	15	15	25
254	254	167	15	15	15	15	15	15	15	15
	254	132	15	15	15	15	15	15	15	15
	254	107	15	15	15	15	15	15	15	20
	254	89	15	15	15	20	15	15	15	20
	254	73	15	15	15	20	15	15	20	30
203	203	127	15	15	15	15	15	15	15	15
	203	113	15	15	15	15	15	15	15	15
	203	100	15	15	15	15	15	15	15	20
	203	86	15	15	15	15	15	15	15	20
	203	71	15	15	15	20	15	15	15	25
	203	60	15	15	15	20	15	15	20	30
	203	52	15	15	15	25	15	15	20	30
	203	46	15	15	15	30	15	15	20	30
152	152	51	15	15	15	20	15	15	15	25
	152	44	15	15	15	20	15	15	20	30
	152	37	15	15	15	25	15	15	20	30
	152	30	15	15	20	30	15	15	20	30
	152	23	15	15	20	30	15	15	25	30

[1]Glasroc F FIRECASE thickness combinations:

15mm = 1 x 15mm
20mm = 1 x 20mm
25mm = 1 x 25mm
30mm = 2 x 15mm
35mm = 1 x 15mm + 1 x 20mm

System references: D120001 (screwed system)

Beam/column/joist dimension orientation:

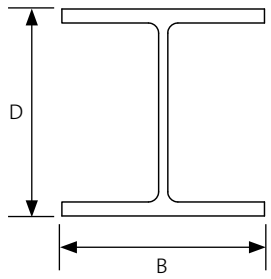

FireCase design (continued)

Table 5 – Section factor A/V (Hp/A) of universal beams

Universal beams serial size of steel (mm x mm x kg/m)			A / V Values	
			3 sided encasement	4 sided encasement
D	B	Mass/metre	m^{-1}	m^{-1}
1016	305	487	40	45
	305	438	40	50
	305	393	45	55
	305	349	50	60
	305	314	55	65
	305	272	65	75
	305	249	70	80
	305	222	80	90
914	419	388	45	55
	419	343	50	60
	305	289	60	65
	305	253	65	75
	305	224	75	85
	305	201	80	95
838	292	226	70	80
	292	194	80	90
	292	176	90	100
762	267	197	70	85
	267	173	80	95
	267	147	95	110
	267	134	105	120
686	254	170	75	90
	254	152	85	95
	254	140	90	105
	254	125	100	115
610	305	238	50	60
	305	179	70	80
	305	149	80	95
	229	140	80	95
	229	125	90	105
	229	113	100	115
	229	101	110	130
	178	100	110	125
	178	92	120	135
	178	82	130	150
533	312	273	40	50
	312	219	50	65
	312	182	60	75
	312	151	75	90
	210	138	75	85
	210	122	85	95
	210	109	95	110
	210	101	100	115
	210	92	110	125
	210	82	120	140
	165	85	115	130
	165	75	130	145
	165	66	145	165

Table 5 (continued) – Section factor A/V (Hp/A) of universal beams

Universal beams serial size of steel (mm x mm x kg/m)			A / V Values	
			3 sided encasement	4 sided encasement
D	B	Mass/metre	m^{-1}	m^{-1}
457	191	161	60	65
	191	133	70	80
	191	106	85	100
	191	98	90	105
	191	89	100	115
	191	82	105	125
	191	74	115	135
	191	67	130	150
	152	82	105	120
	152	74	115	130
	152	67	125	145
	152	60	140	160
	152	52	160	180
406	178	85	95	110
	178	74	105	125
	178	67	115	140
	178	60	130	155
	178	54	145	170
	140	53	140	160
	140	46	160	185
	140	39	190	215
356	171	67	105	125
	171	57	120	145
	171	51	135	160
	171	45	150	180
	127	39	165	195
	127	33	195	225
305	165	54	115	140
	165	46	135	160
	165	40	150	185
	127	48	120	145
	127	42	140	160
	127	37	155	180
	102	33	175	200
	102	28	200	230
	102	25	225	255
254	146	43	120	150
	146	37	140	170
	146	31	165	200
	102	28	175	200
	102	25	190	225
	102	22	220	255
203	133	30	145	180
	133	25	170	210
	102	23	175	205
178	102	19	190	230
152	89	16	195	235
127	76	13	200	245

Beam/column/joist dimension orientation:

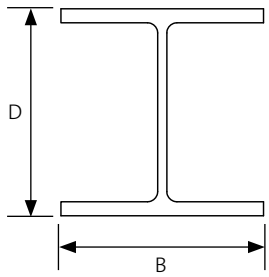

You may also be interested in...

Need 180mins fire protection? If so, consider the GypLyner ENCASE system.

▶ Refer to C03. S03. P10

FireCase design (continued)

Table 6 – Section factor A/V (Hp/A) of universal columns

Universal columns serial size of steel (mm x mm x kg/m)			A / V Values	
			3 sided encasement	4 sided encasement
D	B	Mass/metre	m^{-1}	m^{-1}
356	406	634	15	20
	406	551	20	25
	406	467	20	30
	406	393	25	35
	406	340	30	35
	406	287	30	45
	406	235	40	50
	368	202	45	60
	368	177	50	65
	368	153	55	75
	368	129	65	90
305	305	283	30	40
	305	240	35	45
	305	198	40	50
	305	158	50	65
	305	137	55	70
	305	118	60	85
	305	97	75	100
254	254	167	40	50
	254	132	50	65
	254	107	60	75
	254	89	70	90
	254	73	80	110
203	203	127	45	55
	203	113	45	60
	203	100	55	70
	203	86	60	80
	203	71	70	95
	203	60	80	110
	203	52	95	125
	203	46	105	140
152	152	51	75	100
	152	44	85	115
	152	37	100	135
	152	30	120	160
	152	23	155	210

Table 7 – Section factor A/V (Hp/A) of universal joist

Universal joist serial size of steel (mm x mm x kg/m)			A / V Values	
			3 sided encasement	4 sided encasement
D	B	Mass/metre	m^{-1}	m^{-1}
254	203	82	70	90
	114	37	130	155
203	152	52	85	105
	102	25	155	190
178	102	22	165	205
152	127	37	90	120
	89	17	180	220
	76	18	165	200
127	114	30	100	130
	114	27	110	140
	76	16	155	195
	76	13	195	240
114	114	27	100	135
102	102	23	105	140
	64	10	215	270
	44	7	260	305
89	89	19	105	145
76	76	15	120	165
76	76	13	140	185

Beam/column/joist dimension orientation:

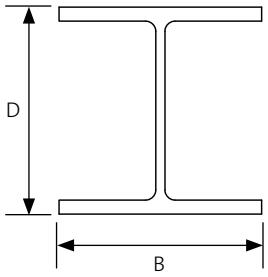

SPECSURE Lifetime System Warranty

SpecSure®

All our systems are covered by **SpecSure®** when using genuine British Gypsum and Saint-Gobain Isover products.

FireCase performance

Table 8
Solutions to satisfy the 550°C criteria when tested in accordance with *BS EN 13381-4* (columns only)
▶ Refer to **C02. S01. P05**

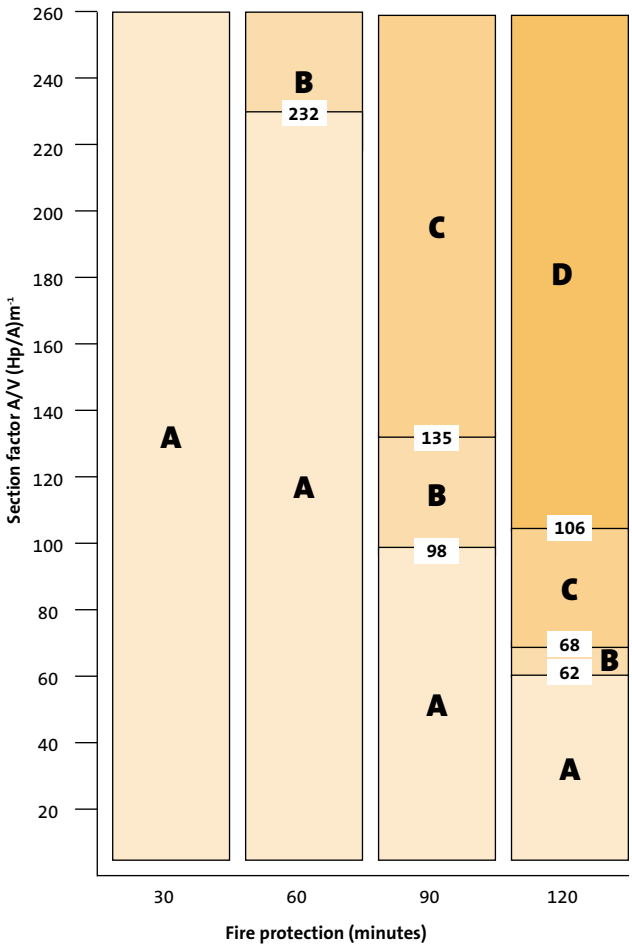

Key - Thickness of Glasroc F FIRECASE required

A = 15mm
B = 20mm
C = 25mm
D = 30mm

System references: D120001 (screwed system)

Table 9
Solutions to satisfy the 550°C criteria when tested in accordance with *BS EN 13381-4* (beams only)
▶ Refer to **C02. S01. P05**

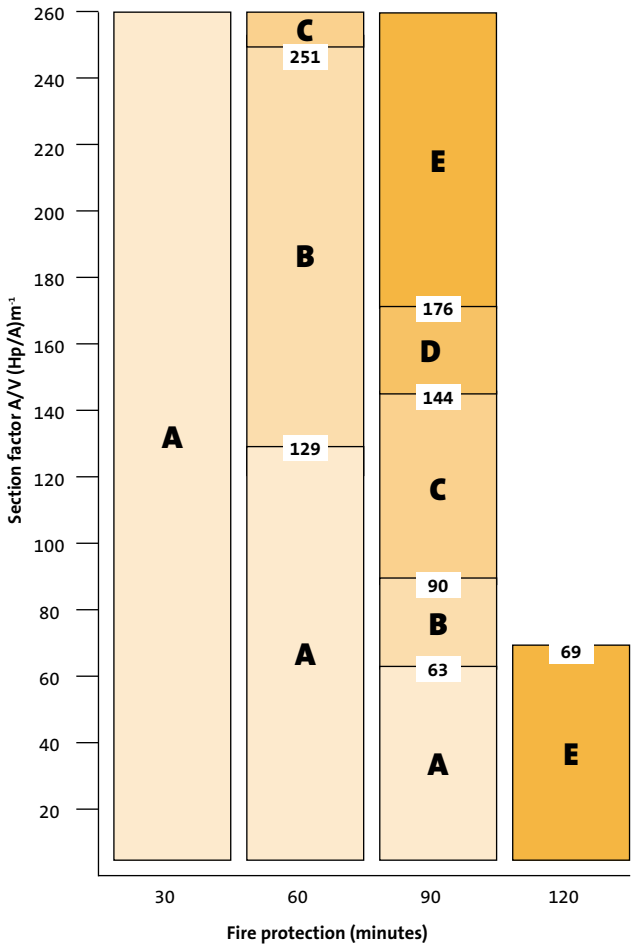

Key - Thickness of Glasroc F FIRECASE required

A = 15mm
B = 20mm
C = 25mm
D = 30mm
E = 35mm (15 + 20mm)

System references: D120001 (screwed system)

FireCase performance (continued)

Table 10
Solutions to satisfy the 550°C criteria when tested in accordance with *BS 476: Part 20: 1987* (following ASFP Yellow Book 3rd Edition appraisal methodology) (beam and column encasement)

▶ Refer to **C02. S01. P05**

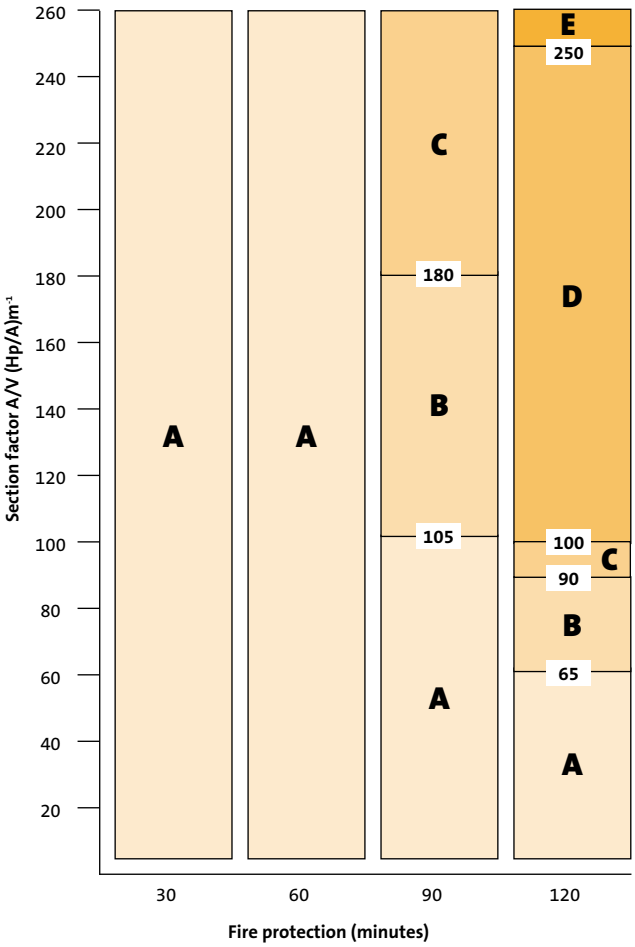

Key - Thickness of Glasroc F FIRECASE required

A = 15mm
B = 20mm
C = 25mm
D = 30mm[1]
E = 35mm (15mm + 20mm)

System references: D120001 (screwed system)

Table 11
Solutions to satisfy the 620°C criteria when tested in accordance with *BS 476: Part 20: 1987* (following ASFP Yellow Book 3rd Edition appraisal methodology) (beam and column encasement)

▶ Refer to **C02. S01. P05**

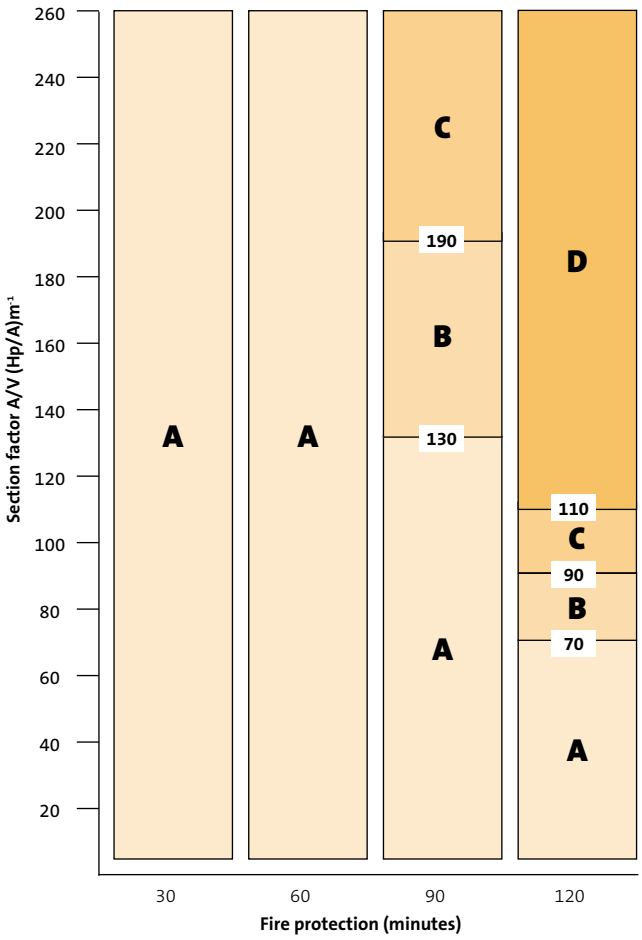

Key - Thickness of Glasroc F FIRECASE required

A = 15mm
B = 20mm
C = 25mm
D = 30mm[1]

System references: D120001 (screwed system)

[1] For columns, either 1 x 30mm or 2 x 15mm may be used. For beams, 2 x 15mm should be used.

FireCase construction details

1

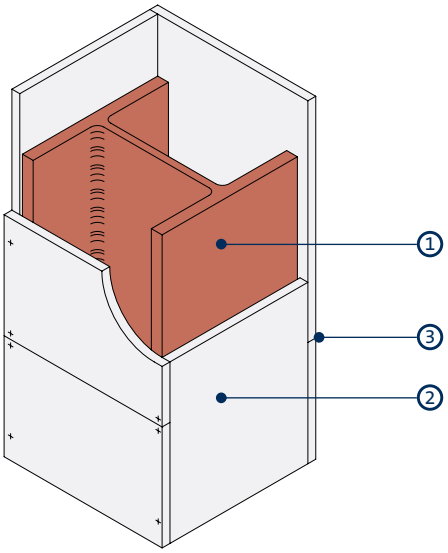

Four-sided column encasement for up to 120 minutes fire protection - single layer

2

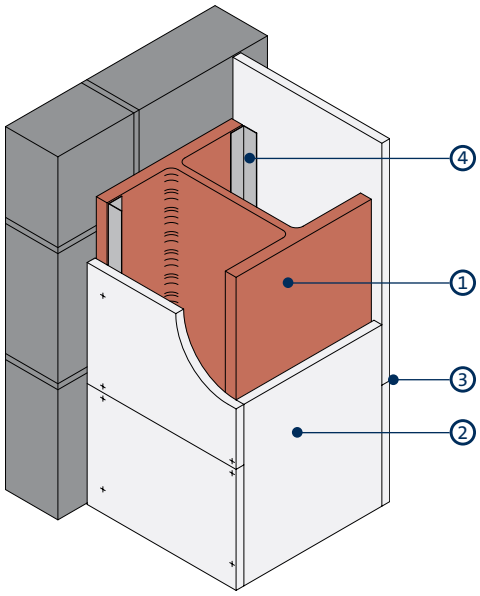

Three-sided column encasement incorporating steel angles for up to 120 minutes fire protection - single layer

3

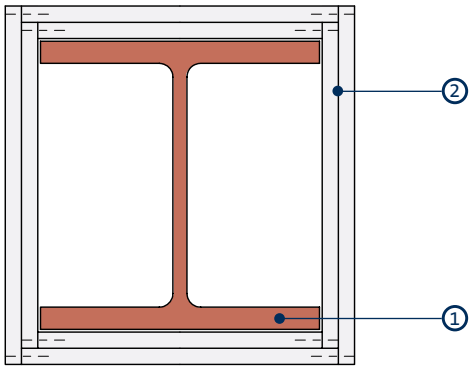

Four-sided column encasement for up to 120 minutes fire protection - double layer

1 Structural steel
2 Glasroc F FIRECASE fixed together with Glasroc F FIRECASE Screws at 150mm centres
3 Board joints staggered by minimum 600mm between adjacent sides
4 Gypframe FEA1 Steel Angle suitably fixed to column flange at 600mm centres

FireCase construction details (continued)

4

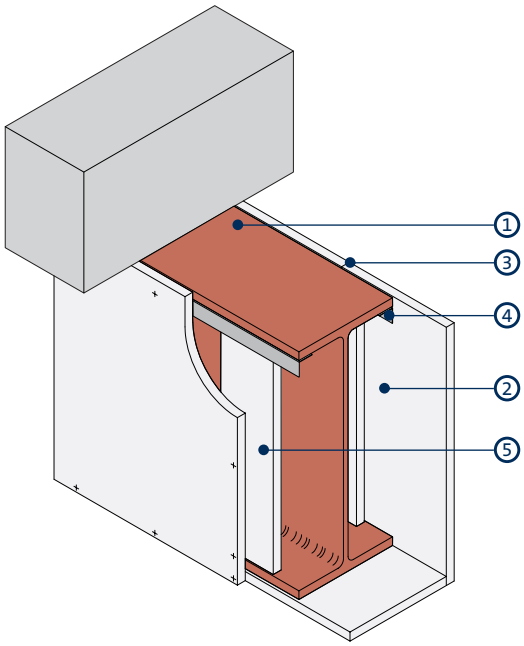

Three-sided beam encasement incorporating steel angles for up to 120 minutes fire protection - single layer

5

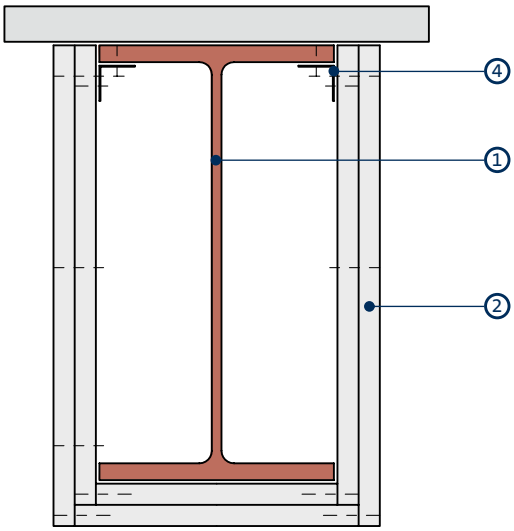

Three-sided beam encasement incorporating steel angles for up to 120 minutes fire protection - double layer

6

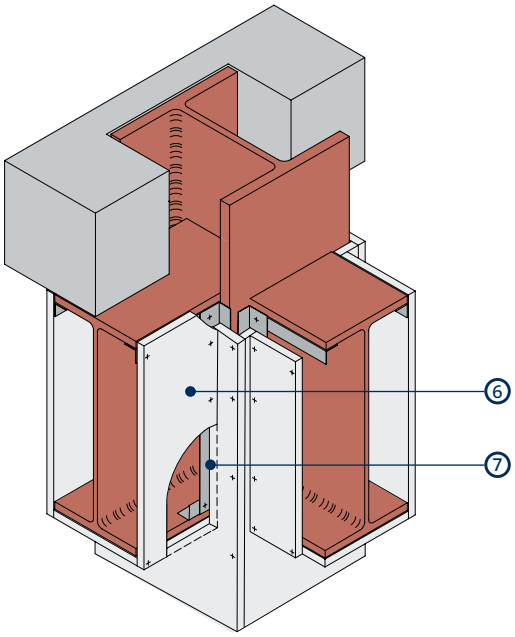

Column and beam encasement junction - single layer

1 Structural steel
2 Glasroc F FIRECASE fixed together with Glasroc F FIRECASE Screws at 150mm centres
3 Board joints staggered by minimum 600mm between adjacent sides
4 Gypframe FEA1 Steel Angle suitably fixed to beam flange at 600mm centres
5 60mm wide Glasroc F FIRECASE backing strip (for single layer systems only)
6 Beam encasement boards butted tight to column encasement
7 Column encasement boards cut around penetrations

FireCase construction details (continued)

7

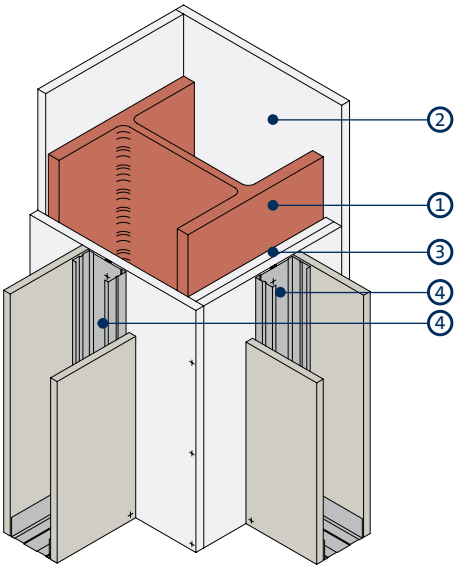

Column encasement and partition junction for partitions up to 60 minutes fire resistance to *BS 476 - Part 22* Only and *BS 5234* Light and Medium Duty

8

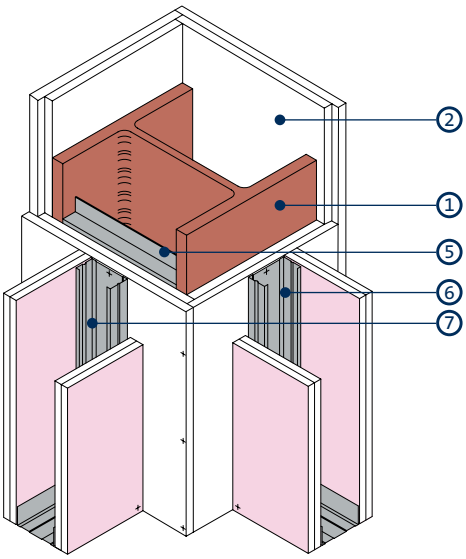

Column encasement and partition junction for partitions up to 120 minutes fire resistance and *BS 5234* Heavy and Severe Duty

9

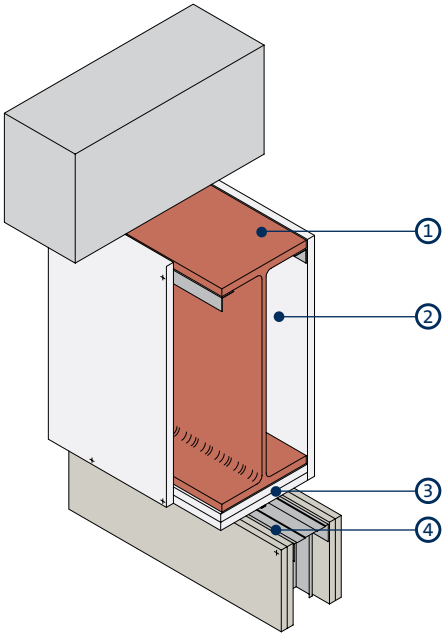

Beam encasement and partition junction for partitions up to 60 minutes fire resistance to *BS 476 - Part 22* Only and *BS 5234* Light and Medium Duty

10

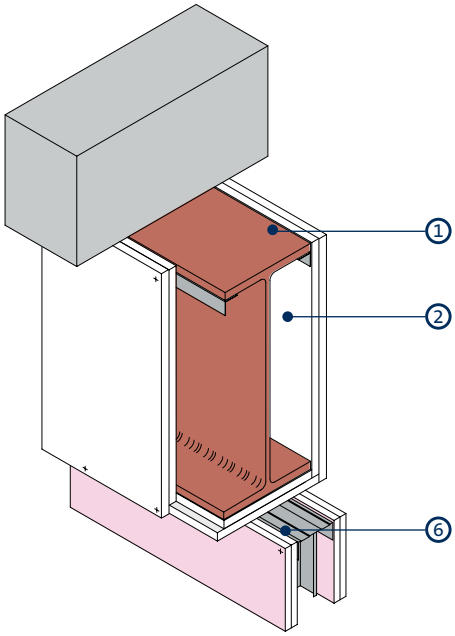

Beam encasement and partition junction for partitions up to 120 minutes fire resistance and *BS 5234* Heavy and Severe Duty

1 Structural steel
2 **FireCase** encasement
3 Additional layer of Glasroc F FIRECASE forming packer to receive partition fixing
4 Gypframe 'C' Stud / Channel bonded to Glasroc F FIRECASE with continuous bead of Gyproc Sealant (two beads for studs wider than 75mm) and fixed with British Gypsum Drywall Screws at 600mm centres (in two lines staggered by 300mm for studs wider than 75mm). Allow 24 hours before boarding
5 Suitable size Z-section (by others) fixed between column flanges at 600mm centres
6 Gypframe 'C' Stud / Channel suitably fixed through Glasroc F FIRECASE to structural steel at 600mm centres (in two lines staggered by 300mm for studs wider than 75mm)
7 Gypframe 'C' Stud suitably fixed through Glasroc F FIRECASE to Z-sections (in two lines for studs wider than 75mm)

NB To optimise accoustic performance install Isover insulation within the encasement void.

FireCase construction details (continued)

11

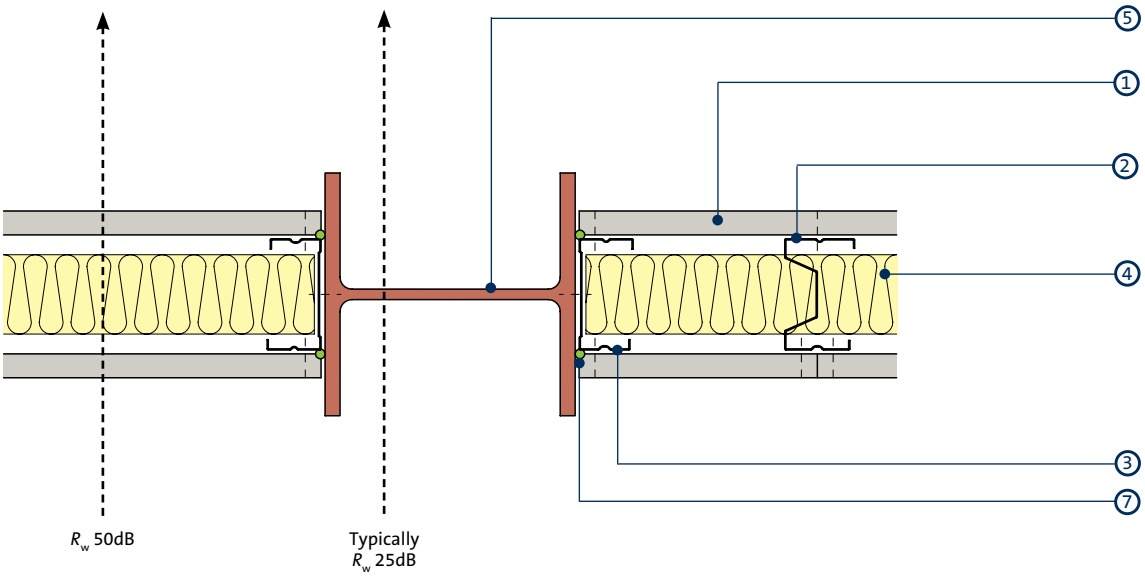

Exposed / painted steel column

12

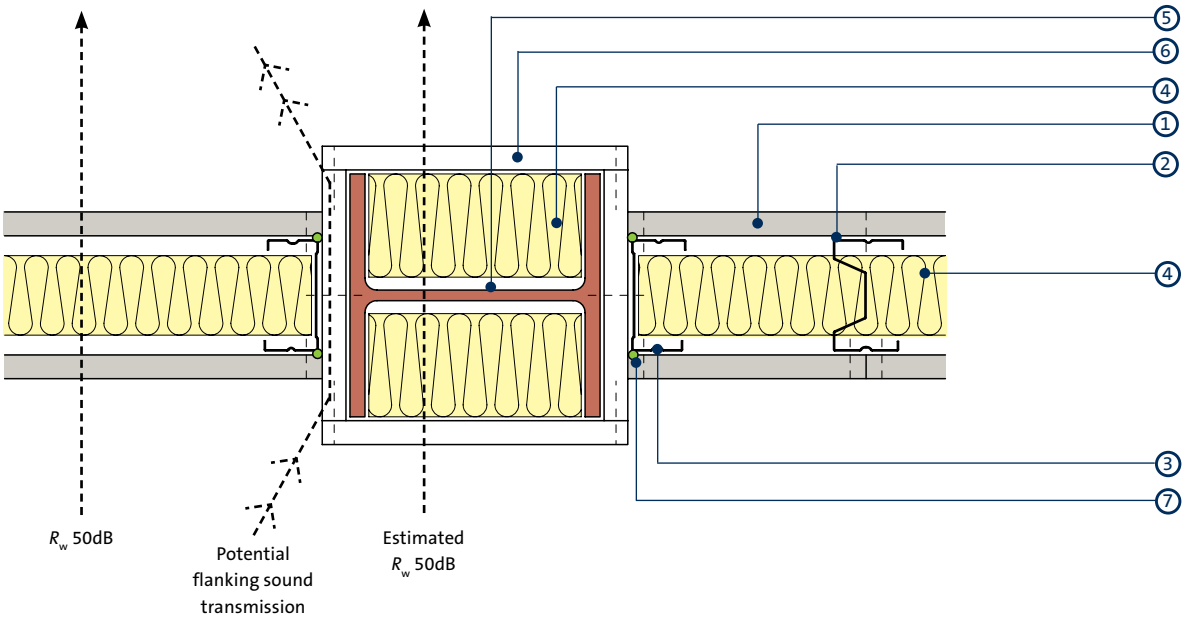

Encased steel column

1 Gyproc DuraLine
2 Gypframe AcouStud
3 Gypframe 'C' Stud
4 Isover insulation
5 Structural steel
6 Glasroc F FIRECASE
7 Gyproc Sealant

FireCase construction details (continued)

13

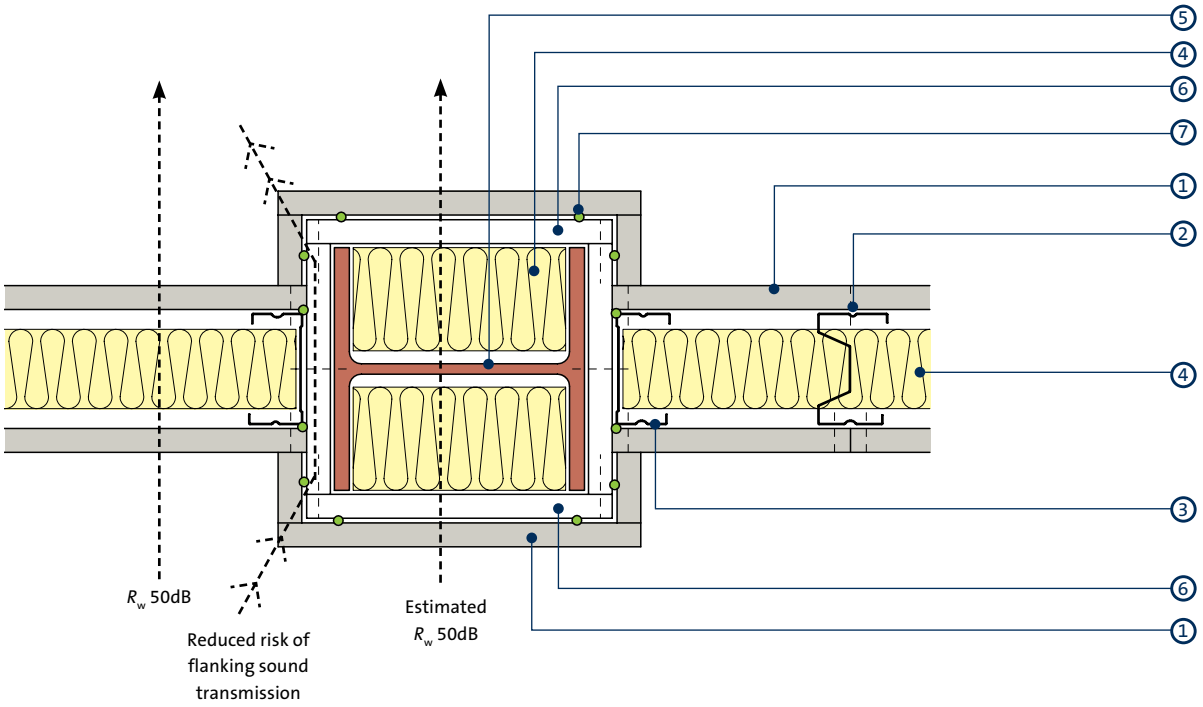

Encased steel column with additional plasterboard lining

14

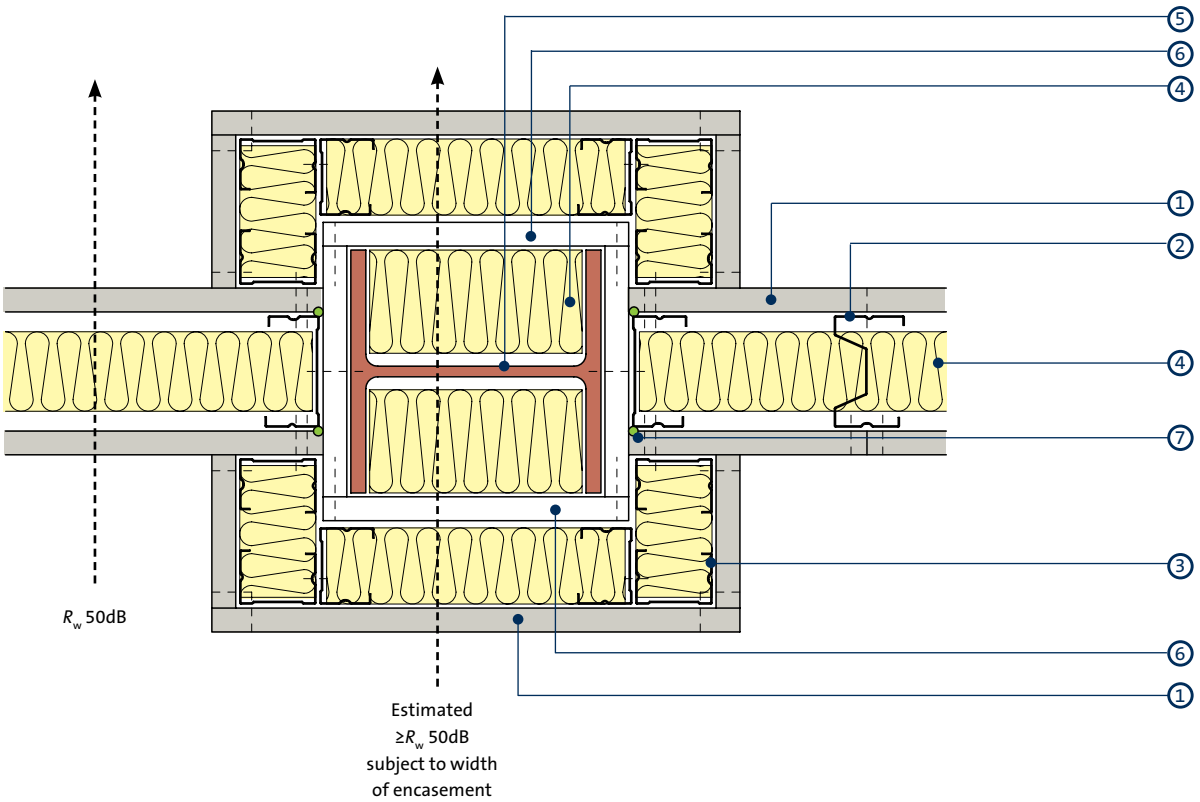

Encased steel column with additional framing, insulation and plasterboard lining

1 Gyproc DuraLine
2 Gypframe AcouStud
3 Gypframe 'C' Stud
4 Isover insulation
5 Structural steel
6 Glasroc F FIRECASE
7 Gyproc Sealant

FireCase construction details (continued)

15

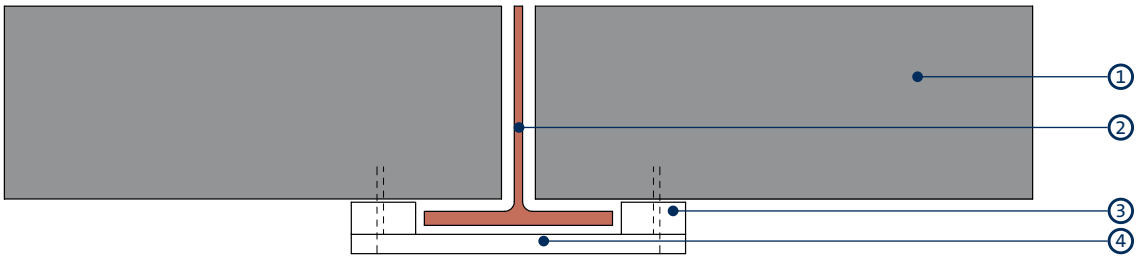

Column flange projection less than 30mm to *BS 476 - Part 20* Only

16

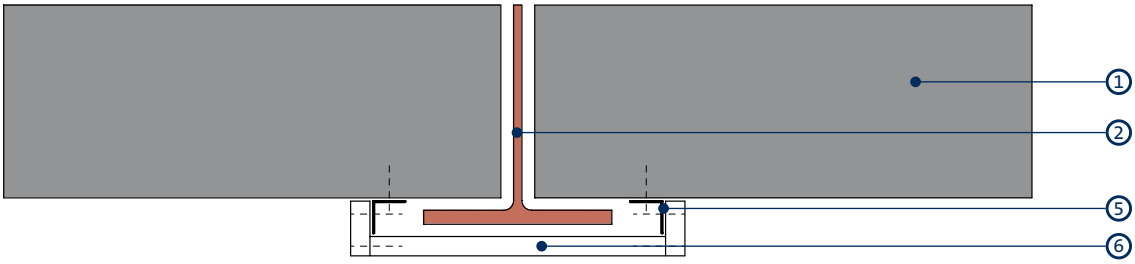

Column flange projection less than 30mm using steel angles to *BS 476 - Part 20* Only

17

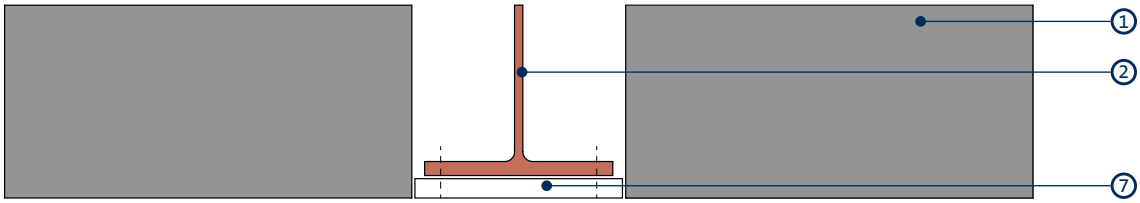

Encasement flush with blockwork to *BS 476 - Part 20* Only

1 Blockwork
2 Structural steel
3 Minimum 50mm wide strip of Glasroc F FIRECASE suitably fixed to blockwork at 300mm centres
4 Glasroc F FIRECASE suitably fixed through packer to blockwork at 150mm centres
5 Gypframe FEA1 Steel Angle suitably fixed to blockwork at 300mm centres
6 Glasroc F FIRECASE fixed together and to Gypframe FEA1 Steel Angles with Glasroc F FIRECASE Screws at 150mm centres
7 Glasroc F FIRECASE fixed to column with mechanical steel pin fixings at 300mm centres, in two lines staggered by 150mm

FireCase system components

Gypframe metal components (▶ Refer to C10. S02. P14 for details)

Gypframe FEA1 Steel Angle
Steel angle providing framing stability and board support.

Board products (▶ Refer to section C10. S03. P19 for details)

Glasroc F FIRECASE
Non-combustible glass-reinforced gypsum board giving up to 120 minutes fire protection.

Fixing products (▶ Refer to C10. S04. P04 for details)

Glasroc F FIRECASE Screws
Corrosion resistant self-tapping steel screws with unique head design that countersinks itself into Glasroc F FIRECASE board to board and board to metal framing.

Plasterboard accessories (▶ Refer to C10. S05. P02 for details)

Gyproc Jointing Material
Jointing compounds, ready mixes and adhesives for reinforcement and finishing of board joints. Primers and sealers for treatment of boards for pre-decoration.

Gyproc edge and angle beads
Protecting and enhancing board edges and corners

Gyproc Sealant
Used to seal paths for optimal sound insulation.

Finishing products (▶ Refer to C10. S06. P02 for details)

Thistle MultiFinish
To provide a plaster skim finish on most common backgrounds including undercoat plasters and plasterboard.

ThistlePro PureFinish
To provide a plaster skim finish with ACTIV*air* technology. Used to finish most common backgrounds including undercoat plasters and plasterboard. For more information refer to C02. S01. P49.

Thistle BoardFinish
To provide a plaster skim finish to Gyproc plasterboards.

ThistlePro DuraFinish
To provide a plaster skim finish and provide up to 60% tougher resistance to accidental damage.

Plaster accessories
Designed for the reinforcement and finishing of board joints before plaster skimming.

FireCase installation overview

This is intended to be a basic description of how the system is built. For detailed installation guidance refer to the **British Gypsum Site Book**.

For two or three-sided protection to steel beams or columns, Gypframe FEA1 Steel Angles are located to both sides of the wall / soffit flange and secured using appropriate fixings.

Glasroc F FIRECASE boards are cut to width plus board thickness and fixed to the Gypframe FEA1 Steel Angles with Glasroc F FIRECASE Screws at 150mm centres ensuring a 600mm joint stagger between adjacent boards is maintained.

For single layer beam encasements only, the board joints are backed by 60mm wide strips of Glasroc F FIRECASE.

Where boards abut at corners Glasroc F FIRECASE boards are fixed together at 150mm centres with suitable length Glasroc F FIRECASE Screws.

For four sided column encasements the three sided procedure is followed without the use of angles and all boards fixed to adjacent boards at the corners.

Where multiple board layers are being used ensure that a 600mm board joint stagger is maintained between adjacent boards and between layers.

Additional information

For full installation details, refer to the **British Gypsum Site Book**, available to download from british-gypsum.com

GypLyner ENCASE

Metal framed structural steel encasement system

SPECSURE Lifetime System Warranty

All our systems are covered by **SpecSure®** when using genuine British Gypsum and Saint-Gobain Isover products

GypLyner ENCASE

GypLyner ENCASE is a fire protection system capable of providing up to 180 minutes fire resistance to structural steel columns and beams. Installation is quick and easy due to the use of simple clip fixings to secure the framing sections.

The system will protect all universal column and beam sections with flange thicknesses between 6mm and 28mm. **GypLyner ENCASE** will also protect many joist sections. It can be used in any type of building where encasement to structural steel is required.

30 – 180 mins

SPECSURE Lifetime System Warranty

Refer to C01. S01. P07

ACTIV air

System can be skim finished with ThistlePro PureFinish. Refer to C02. S01. P49

Key benefits

- Reduced installation time due to the simple, clip-on framing system with **GypLyner ENCASE**
- Misalignment of structural steelwork can be accommodated by the versatile framing system to ensure the lining is straight and true
- Improved acoustic performance as a result of the boards being fixed into a framework rather than directly into the steel beam or column
- Damage to **GypLyner ENCASE** is more easily identifiable when compared to other fire protection systems such as intumescent paint

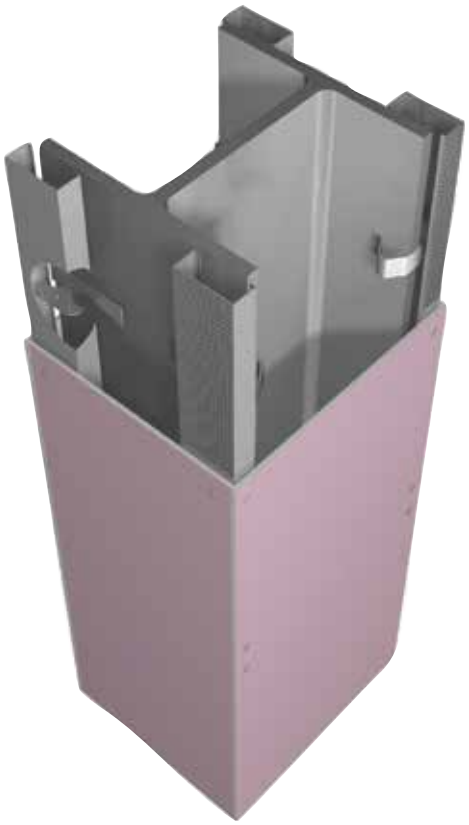

You may also be interested in...

Need to minimise the space taken by the structural steel encasement system? If so, consider the frameless **FireCase** system.

▶ Refer to C03. S02. P02 – **FireCase**

If you need to protect structural steel within the cavity.

▶ Refer to C04. S07. P02 – **GypWall QUIET** or
C04. S08. P02 – **GypWall QUIET IWL**

GypLyner ENCASE design

Planning - key factors

GypLyner ENCASE steel encasement is suitable for protecting structural steel sections with a section factor A/V (Hp/A) up to 260m^{-1}, calculated on the basis of box protection to three or four sides as required. It will protect all universal column and beam sections described in *BS 4: Part 1*, and many joist sections.

Building Design

This system comprises Gypframe GL10 GypLyner Steel Framing Clips located on steel sections at 800mm centres to support Gypframe GL1 Lining Channels.

Lining selection

Follow either of the procedures below to determine the thickness of cladding required:

Option 1
Use tables 2 - 4 to select steel size and fire protection then read off the required board size.

Option 2

1. Ascertain whether protection is required on three or four sides of the section
2. Find out what period of fire resistance is required
3. Refer to the A/V (Hp/A) tables 5 - 7. Locate the steel section to be protected, listed by its size and mass per metre, and read off the section factor A/V
4. Refer to tables 8 - 10. Locate the A/V value on the vertical scale on the appropriate table. Read across the chart to the column relating to the period of fire resistance required and read off the designated thickness of the relevant cladding required to form the encasement
5. Select the type of board to be used

For castellated sections and cellular beams please refer to the Association for Specialist Fire Protection publication, ASFP Yellow Book - 'Fire Protection for Structural Steel in Buildings' for guidance, available to download from asfp.org.uk

Size of encasement

The minimum dimension of encasement required for three or four-sided protection can be determined as shown in table 1.

Handy hint

Where larger encasement systems are required, a 'boxing out' method using Gypframe studs and channels can be used.

▶ Refer to construction details 7 - 8.

Partition fixing

Partitions and wall linings can be fixed through to the metal framework.

▶ Refer to construction details 5 - 6.

Water vapour resistance

Vapour control can be provided to encasements which form part of an external wall lining by using Gyproc FireLine DUPLEX as the lining. The water vapour resistance can be further improved by treating the lining surface with two coats of Gyproc Drywall Sealer. Where Glasroc F FIRECASE or Glasroc F MULTIBOARD forms the lining, vapour control can be achieved by using a suitable proprietary paint treatment.

Board finishing

All board joints need to be taped and filled or skimmed to ensure fire protection is provided.

▶ Refer to C08. S01. P02 – Finishes.

Important information

- Where the steel section web or flange dimension exceeds 600mm, additional support will be required for the cladding. Noggings of Gypframe GL1 Lining Channel are installed at 600mm centres between adjacent Gypframe GL1 Lining Channels to form supplementary framing.
- All board joints should be staggered by a minimum of 600mm.

Table 1 – The minimum dimension of encasements required for three or four sided protection

Depth	Calculation
Three-sided encasements	Overall steel section depth + 25mm + the thickness of lining board
Four-sided encasements	Overall steel section depth + 50mm + twice the thickness of lining board
Width	**Calculation**
Three and four-sided encasements	Overall steel section width + 20mm + twice the thickness of lining board

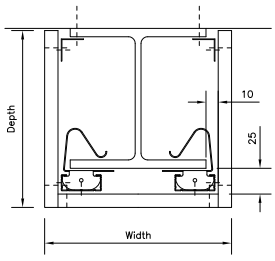

Three-sided column encasement

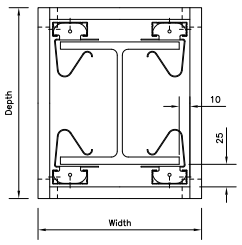

Four-sided column encasement

GypLyner ENCASE design (continued)

For details of when to specify fire resistance using BS
▶ Refer to **C02. S01. P05**

Table 2 – 550°C chart to *BS 476: Part 20* for selecting the required Gyproc FireLine lining thickness for universal beam sizes

Universal beams serial size of steel (mm x mm x kg/m)			Total Gyproc FireLine board thickness (mm) to achieve fire resistance below[1]							
			3 sided encasements				4 sided encasements			
D	B	Mass/metre	30 min	60 min	90 min	120 min	30 min	60 min	90 min	120 min
1016	305	487	12.5	12.5	25	30	12.5	12.5	25	30
	305	438	12.5	12.5	25	30	12.5	12.5	25	30
	305	393	12.5	12.5	25	30	12.5	12.5	25	30
	305	349	12.5	12.5	25	30	12.5	12.5	25	30
	305	314	12.5	12.5	25	30	12.5	12.5	25	30
	305	272	12.5	12.5	25	30	12.5	12.5	25	30
	305	249	12.5	12.5	25	30	12.5	12.5	25	30
	305	222	12.5	12.5	25	30	12.5	12.5	25	30
914	419	388	12.5	12.5	25	30	12.5	12.5	25	30
	419	343	12.5	12.5	25	30	12.5	12.5	25	30
	305	289	12.5	12.5	25	30	12.5	12.5	25	30
	305	253	12.5	12.5	25	30	12.5	12.5	25	30
	305	224	12.5	12.5	25	30	12.5	12.5	25	30
	305	201	12.5	12.5	25	30	12.5	12.5	25	30
838	292	226	12.5	12.5	25	30	12.5	12.5	25	30
	292	194	12.5	12.5	25	30	12.5	12.5	25	30
	292	176	12.5	12.5	25	30	12.5	12.5	25	30
762	267	197	12.5	12.5	25	30	12.5	12.5	25	30
	267	173	12.5	12.5	25	30	12.5	12.5	25	30
	267	147	12.5	12.5	25	30	12.5	12.5	25	30
	267	134	12.5	12.5	25	30	12.5	12.5	25	37.5
686	254	170	12.5	12.5	25	30	12.5	12.5	25	30
	254	152	12.5	12.5	25	30	12.5	12.5	25	30
	254	140	12.5	12.5	25	30	12.5	12.5	25	30
	224	125	12.5	12.5	25	30	12.5	12.5	25	37.5
610	305	238	12.5	12.5	25	30	12.5	12.5	25	30
	305	179	12.5	12.5	25	30	12.5	12.5	25	30
	305	149	12.5	12.5	25	30	12.5	12.5	25	30
	229	140	12.5	12.5	25	30	12.5	12.5	25	30
	229	125	12.5	12.5	25	30	12.5	12.5	25	30
	229	113	12.5	12.5	25	30	12.5	12.5	25	37.5
	229	101	12.5	12.5	25	30	12.5	12.5	25	37.5
	178	100	12.5	12.5	25	30	12.5	12.5	25	37.5
	178	92	12.5	12.5	25	37.5	12.5	12.5	25	37.5
	178	82	12.5	12.5	25	37.5	12.5	12.5	25	37.5
533	312	273	12.5	12.5	25	30	12.5	12.5	25	30
	312	219	12.5	12.5	25	30	12.5	12.5	25	30
	312	182	12.5	12.5	25	30	12.5	12.5	25	30
	312	151	12.5	12.5	25	30	12.5	12.5	25	30
	210	138	12.5	12.5	25	30	12.5	12.5	25	30
	210	122	12.5	12.5	25	30	12.5	12.5	25	30
	210	109	12.5	12.5	25	30	12.5	12.5	25	30
	210	101	12.5	12.5	25	30	12.5	12.5	25	37.5
	210	92	12.5	12.5	25	30	12.5	12.5	25	37.5
	210	82	12.5	12.5	25	37.5	12.5	12.5	25	37.5
	165	85	12.5	12.5	25	37.5	12.5	12.5	25	37.5
	165	75	12.5	12.5	25	37.5	12.5	12.5	25	37.5
	165	66	12.5	12.5	25	37.5	12.5	12.5	25	37.5

[1] Gyproc FireLine thickness combinations

12.5mm = 1 x 12.5mm
25mm = 2 x 12.5mm
30mm = 2 x 15mm
37.5mm = 3 x 12.5mm

System reference: D150001

Beam/column/joist dimension orientation:

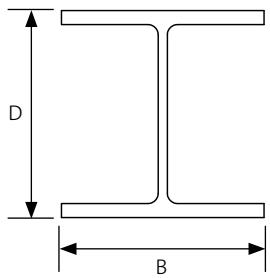

GypLyner ENCASE design (continued)

For details of when to specify fire resistance using BS
▶ Refer to **C02. S01. P05**

Table 2 (continued) – 550°C chart to *BS 476: Part 20* for selecting the required Gyproc FireLine lining thickness for universal beam sizes

Universal beams serial size of steel (mm x mm x kg/m)			Total Gyproc FireLine board thickness (mm) to achieve fire resistance below[1]							
			3 sided encasements				4 sided encasements			
D	B	Mass/metre	30 min	60 min	90 min	120 min	30 min	60 min	90 min	120 min
457	191	161	12.5	12.5	25	30	12.5	12.5	25	30
	191	133	12.5	12.5	25	30	12.5	12.5	25	30
	191	106	12.5	12.5	25	30	12.5	12.5	25	30
	191	98	12.5	12.5	25	30	12.5	12.5	25	30
	191	89	12.5	12.5	25	30	12.5	12.5	25	37.5
	191	82	12.5	12.5	25	30	12.5	12.5	25	37.5
	191	74	12.5	12.5	25	37.5	12.5	12.5	25	37.5
	191	67	12.5	12.5	25	37.5	12.5	12.5	25	37.5
	152	82	12.5	12.5	25	30	12.5	12.5	25	37.5
	152	74	12.5	12.5	25	37.5	12.5	12.5	25	37.5
	152	67	12.5	12.5	25	37.5	12.5	12.5	25	37.5
	152	60	12.5	12.5	25	37.5	12.5	12.5	25	37.5
	152	52	12.5	12.5	25	37.5	12.5	15	25	37.5
406	178	85	12.5	12.5	25	30	12.5	12.5	25	30
	178	74	12.5	12.5	25	30	12.5	12.5	25	37.5
	178	67	12.5	12.5	25	37.5	12.5	12.5	25	37.5
	178	60	12.5	12.5	25	37.5	12.5	12.5	25	37.5
	178	54	12.5	12.5	25	37.5	12.5	15	25	37.5
	140	53	12.5	12.5	25	37.5	12.5	12.5	25	37.5
	140	46	12.5	12.5	25	37.5	12.5	15	25	37.5
	140	39	12.5	15	25	37.5	12.5	25	27.5	40
356	171	67	12.5	12.5	25	30	12.5	12.5	25	37.5
	171	57	12.5	12.5	25	37.5	12.5	12.5	25	37.5
	171	51	12.5	12.5	25	37.5	12.5	12.5	25	37.5
	171	45	12.5	12.5	25	37.5	12.5	15	25	37.5
	127	39	12.5	12.5	25	37.5	12.5	15	25	40
	127	33	12.5	15	25	40	12.5	25	27.5	40
305	165	54	12.5	12.5	25	37.5	12.5	12.5	25	37.5
	165	46	12.5	12.5	25	37.5	12.5	12.5	25	37.5
	165	40	12.5	12.5	25	37.5	12.5	15	25	37.5
	127	48	12.5	12.5	25	37.5	12.5	12.5	25	37.5
	127	42	12.5	12.5	25	37.5	12.5	12.5	25	37.5
	127	37	12.5	12.5	25	37.5	12.5	15	25	37.5
	102	33	12.5	15	25	37.5	12.5	25	25	40
	102	28	12.5	25	25	40	12.5	25	27.5	42.5
	102	25	12.5	25	27.5	40	12.5	25	27.5	42.5
254	146	43	12.5	12.5	25	37.5	12.5	12.5	25	37.5
	146	37	12.5	12.5	25	37.5	12.5	15	25	37.5
	146	31	12.5	12.5	25	37.5	12.5	25	25	40
	102	28	12.5	15	25	37.5	12.5	25	25	40
	102	25	12.5	15	25	37.5	12.5	25	27.5	40
	102	22	12.5	25	27.5	40	12.5	25	27.5	42.5
203	133	30	12.5	12.5	25	37.5	12.5	15	25	37.5
	133	25	12.5	15	25	37.5	12.5	25	27.5	40
	102	23	12.5	15	25	37.5	12.5	25	27.5	40
178	102	19	12.5	15	25	37.5	12.5	25	27.5	42.5
152	89	16	12.5	15	25	40	12.5	25	27.5	42.5
127	76	13	12.5	25	25	40	12.5	25	27.5	42.5

[1] Gyproc FireLine thickness combinations

12.5mm = 1 x 12.5mm
15mm = 1 x 15mm
25mm = 2 x 12.5mm
27.5mm = 1 x 15mm + 1 x 12.5mm
30mm = 2 x 15mm
37.5mm = 3 x 12.5mm
40mm = 1 x 15mm + 2 x 12.5mm
42.5mm = 2 x 15mm + 1 x 12.5mm

Beam/column/joist dimension orientation:

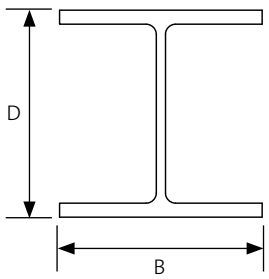

System reference: D150001

GypLyner ENCASE design (continued)

For details of when to specify fire resistance using BS
▶ Refer to **C02. S01. P05**

Table 3 – 550°C chart to *BS 476: Part 20* for selecting the required Gyproc FireLine lining thickness for universal column sizes

Universal columns serial size of steel (mm x mm x kg/m)			Total Gyproc FireLine board thickness (mm) to achieve fire resistance below[1]							
			3 sided encasements				4 sided encasements			
D	B	Mass/metre	30 min	60 min	90 min	120 min	30 min	60 min	90 min	120 min
356	406	634	12.5	12.5	25	30	12.5	12.5	25	30
	406	551	12.5	12.5	25	30	12.5	12.5	25	30
	406	467	12.5	12.5	25	30	12.5	12.5	25	30
	406	393	12.5	12.5	25	30	12.5	12.5	25	30
	406	340	12.5	12.5	25	30	12.5	12.5	25	30
	406	287	12.5	12.5	25	30	12.5	12.5	25	30
	406	235	12.5	12.5	25	30	12.5	12.5	25	30
	368	202	12.5	12.5	25	30	12.5	12.5	25	30
	368	177	12.5	12.5	25	30	12.5	12.5	25	30
	368	153	12.5	12.5	25	30	12.5	12.5	25	30
	368	129	12.5	12.5	25	30	12.5	12.5	25	30
305	305	283	12.5	12.5	25	30	12.5	12.5	25	30
	305	240	12.5	12.5	25	30	12.5	12.5	25	30
	305	198	12.5	12.5	25	30	12.5	12.5	25	30
	305	158	12.5	12.5	25	30	12.5	12.5	25	30
	305	137	12.5	12.5	25	30	12.5	12.5	25	30
	305	118	12.5	12.5	25	30	12.5	12.5	25	30
	305	97	12.5	12.5	25	30	12.5	12.5	25	30
254	254	167	12.5	12.5	25	30	12.5	12.5	25	30
	254	132	12.5	12.5	25	30	12.5	12.5	25	30
	254	107	12.5	12.5	25	30	12.5	12.5	25	30
	254	89	12.5	12.5	25	30	12.5	12.5	25	30
	254	73	12.5	12.5	25	30	12.5	12.5	25	30
203	203	127	12.5	12.5	25	30	12.5	12.5	25	30
	203	113	12.5	12.5	25	30	12.5	12.5	25	30
	203	100	12.5	12.5	25	30	12.5	12.5	25	30
	203	86	12.5	12.5	25	30	12.5	12.5	25	30
	203	71	12.5	12.5	25	30	12.5	12.5	25	30
	203	60	12.5	12.5	25	30	12.5	12.5	25	30
	203	52	12.5	12.5	25	30	12.5	12.5	25	37.5
	203	46	12.5	12.5	25	30	12.5	12.5	25	37.5
152	152	51	12.5	12.5	25	30	12.5	12.5	25	30
	152	44	12.5	12.5	25	30	12.5	12.5	25	37.5
	152	37	12.5	12.5	25	30	12.5	12.5	25	37.5
	152	30	12.5	12.5	25	37.5	12.5	12.5	25	37.5
	152	23	12.5	12.5	25	37.5	12.5	25	27.5	40

For details of when to specify fire resistance using BS
▶ Refer to **C02. S01. P05**

Table 4 – 550°C chart to *BS 476: Part 20* for selecting the required Gyproc FireLine lining thickness for universal joist sizes

Universal joist serial size of steel (mm x mm x kg/m)			Total Gyproc FireLine board thickness (mm) to achieve fire resistance below[1]							
			3 sided encasements				4 sided encasements			
D	B	Mass/metre	30 min	60 min	90 min	120 min	30 min	60 min	90 min	120 min
254	203	82	12.5	12.5	25	30	12.5	12.5	25	30
	114	37	12.5	12.5	25	37.5	12.5	12.5	25	37.5
203	152	52	12.5	12.5	25	30	12.5	12.5	25	30
	102	25	12.5	12.5	25	37.5	12.5	15	25	37.5
178	102	22	12.5	12.5	25	37.5	12.5	25	27.5	40
152	127	37	12.5	12.5	25	30	12.5	12.5	25	37.5
	89	17	12.5	15	25	37.5	12.5	25	27.5	40
	76	18	12.5	12.5	25	37.5	12.5	25	25	40
127	114	30	12.5	12.5	25	30	12.5	12.5	25	37.5
	114	27	12.5	12.5	25	30	12.5	12.5	25	37.5
	76	16	12.5	12.5	25	37.5	12.5	15	25	40
	76	13	12.5	15	25	40	12.5	25	27.5	42.5
114	114	27	12.5	12.5	25	30	12.5	12.5	25	37.5
102	102	23	12.5	12.5	25	30	12.5	12.5	25	37.5
	64	10	12.5	15	27.5	40				
	44	7	12.5	25	27.5	42.5				
89	89	19	12.5	12.5	25	30	12.5	12.5	25	37.5
76	76	15	12.5	12.5	25	37.5	12.5	12.5	25	37.5
	76	13	12.5	12.5	25	37.5	12.5	15	25	37.5

[1] Gyproc FireLine thickness combinations

12.5mm = 1 x 12.5mm
15mm = 1 x 15mm
25mm = 2 x 12.5mm
27.5mm = 1 x 15mm + 1 x 12.5mm
30mm = 2 x 15mm
37.5mm = 3 x 12.5mm

40mm = 1 x 15mm + 2 x 12.5mm
42.5mm = 2 x 15mm + 1 x 12.5mm
- protection not possible

System reference: D150001

Beam/column/joist dimension orientation:

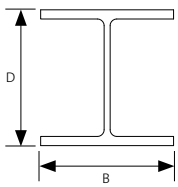

GypLyner ENCASE design (continued)

Table 5 – Section factor A/V (Hp/A) of universal beams

Universal beams serial size of steel (mm x mm x kg/m)			A / V values	
			3 sided encasements	4 sided encasements
D	B	Mass/ metre	m^{-1}	m^{-1}
1016	305	487	40	45
	305	438	40	50
	305	393	45	55
	305	349	50	60
	305	314	55	65
	305	272	65	75
	305	249	70	80
	305	222	80	90
914	419	388	45	55
	419	343	50	60
	305	289	60	65
	305	253	65	75
	305	224	75	85
	305	201	80	95
838	292	226	70	80
	292	194	80	90
	292	176	90	100
762	267	197	70	85
	267	173	80	95
	267	147	95	110
	267	134	105	120
686	254	170	75	90
	254	152	85	95
	254	140	90	105
	254	125	100	115
610	305	238	50	60
	305	179	70	80
	305	149	80	95
	229	140	80	95
	229	125	90	105
	229	113	100	115
	229	101	110	130
	178	100	110	125
	178	92	120	135
	178	82	130	150
533	312	273	40	50
	312	219	50	65
	312	182	60	75
	312	151	75	90
	210	138	75	85
	210	122	85	95
	210	109	95	110
	210	101	100	115
	210	92	110	125
	210	82	120	140
	165	85	115	130
	165	75	130	145
	165	66	145	165

Table 5 (continued) – Section factor A/V (Hp/A) of universal beams

Universal beams serial size of steel (mm x mm x kg/m)			A / V values	
			3 sided encasements	4 sided encasements
D	B	Mass/ metre	m^{-1}	m^{-1}
457	191	161	60	65
	191	133	70	80
	191	106	85	100
	191	98	90	105
	191	89	100	115
	191	82	105	125
	191	74	115	135
	191	67	130	150
	152	82	105	120
	152	74	115	130
	152	67	125	145
	152	60	140	160
	152	52	160	180
406	178	85	95	110
	178	74	105	125
	178	67	115	140
	178	60	130	155
	178	54	145	170
	140	53	140	160
	140	46	160	185
	140	39	190	215
356	171	67	105	125
	171	57	120	145
	171	51	135	160
	171	45	150	180
	127	39	165	195
	127	33	195	225
305	165	54	115	140
	165	46	135	160
	165	40	150	185
	127	48	120	145
	127	42	140	160
	127	37	155	180
	102	33	175	200
	102	28	200	230
	102	25	225	255
254	146	43	120	150
	146	37	140	170
	146	31	165	200
	102	28	175	200
	102	25	190	225
	102	22	220	255
203	133	30	145	180
	133	25	170	210
	102	23	175	205
178	102	19	190	230
152	89	16	195	235
127	76	13	200	245

Beam/column/joist dimension orientation:

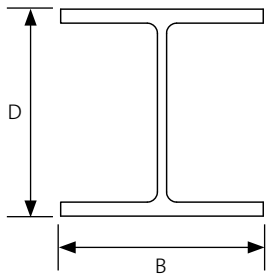

GypLyner ENCASE design (continued)

Table 6 – Section factor A/V (Hp/A) of universal columns

Universal columns serial size of steel (mm x mm x kg/m)			A / V values	
			3 sided encasements	4 sided encasements
D	B	Mass/metre	m^{-1}	m^{-1}
356	406	634	15	20
	406	551	20	25
	406	467	20	30
	406	393	25	35
	406	340	30	35
	406	287	30	45
	406	235	40	50
	368	202	45	60
	368	177	50	65
	368	153	55	75
	368	129	65	90
305	305	283	30	40
	305	240	35	45
	305	198	40	50
	305	158	50	65
	305	137	55	70
	305	118	60	85
	305	97	75	100
254	254	167	40	50
	254	132	50	65
	254	107	60	75
	254	89	70	90
	254	73	80	110
203	203	127	45	55
	203	113	45	60
	203	100	55	70
	203	86	60	80
	203	71	70	95
	203	60	80	110
	203	52	95	125
	203	46	105	140
152	152	51	75	100
	152	44	85	115
	152	37	100	135
	152	30	120	160
	152	23	155	210

Table 7 – Section factor A/V (Hp/A) of universal joist

Universal joist serial size of steel (mm x mm x kg/m)			A / V values	
			3 sided encasements	4 sided encasements
D	B	Mass/metre	m^{-1}	m^{-1}
254	203	82	70	90
	114	37	130	155
203	152	52	85	105
	102	25	155	190
178	102	22	165	205
152	127	37	90	120
	89	17	180	220
	76	18	165	200
127	114	30	100	130
	114	27	110	140
	76	16	155	195
	76	13	195	240
114	114	27	100	135
102	102	23	105	140
	64	10	215	270
	44	7	260	305
89	89	19	105	145
76	76	15	120	165
	76	13	140	185

Beam/column/joist dimension orientation:

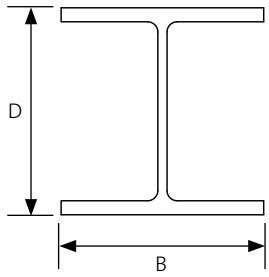

SPECSURE Lifetime System Warranty

SpecSure®

All our systems are covered by **SpecSure®** when using genuine British Gypsum and Saint-Gobain Isover products.

GypLyner ENCASE performance - columns and beams

Table 8
The 550°C chart to *BS 476: Part 20* for selecting Gyproc FireLine lining thickness
▶ Refer to **C02. S01. P05**

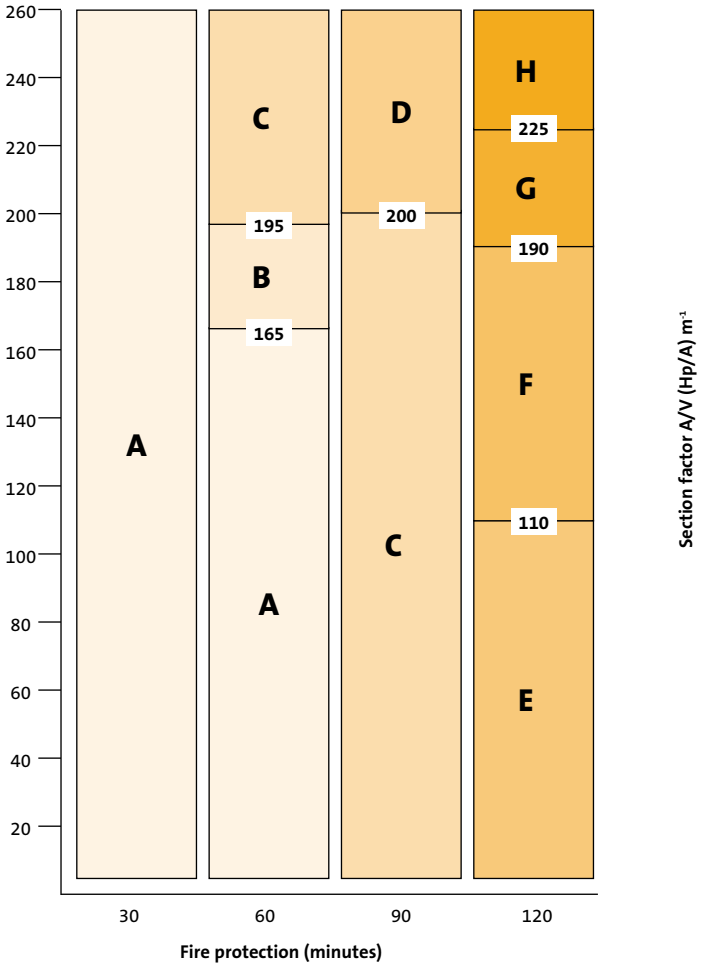

Key - Thickness of Gyproc FireLine required

A = 12.5mm
B = 15mm
C = 25mm (12.5mm + 12.5mm)
D = 27.5mm (15mm + 12.5mm)
E = 30mm (15mm + 15mm)
F = 37.5mm (12.5mm + 12.5mm + 12.5mm)
G = 40mm (15mm + 12.5mm + 12.5mm)
H = 42.5mm (15mm + 15mm + 12.5mm)

System reference: D150001

NB The fire resistance performances are for imperforate linings with all joints taped and filled or skimmed. The quoted performances are achieved only if British Gypsum and Saint-Gobain Isover components are used throughout, and the Company's fixing recommendations are strictly observed. Any variation in the specifications should be checked with British Gypsum.

GypLyner ENCASE performance - columns and beams (continued)

Table 9
Solutions to satisfy the 550°C criteria when tested in accordance with *BS 476: Part 20: 1987 (beam and column encasement)*
▶ Refer to **C02. S01. P05**

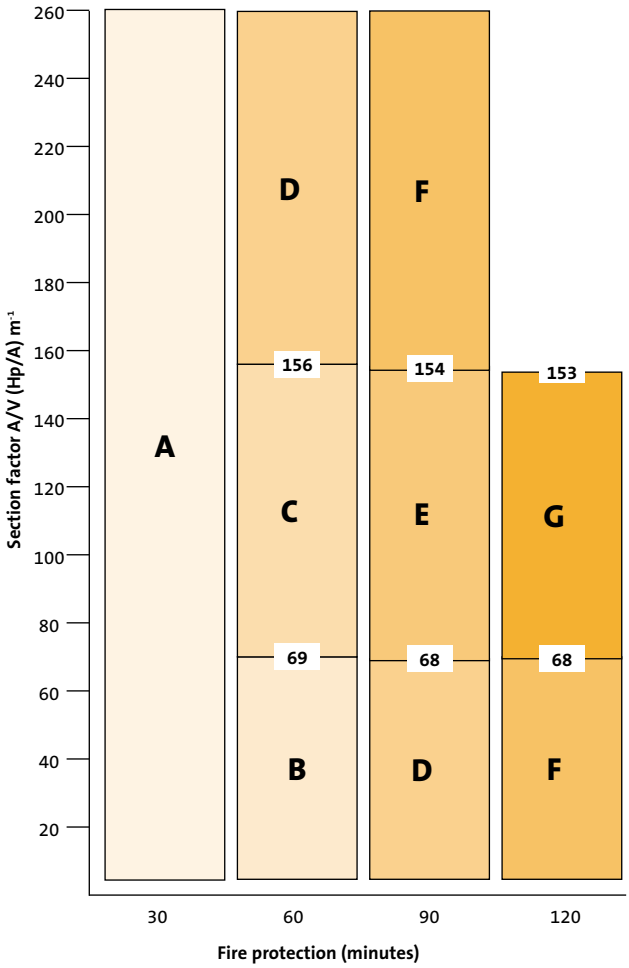

Key - Thickness of Glasroc F MULTIBOARD required

A = 6mm
B = 10mm
C = 12.5mm
D = 20mm (10mm + 10mm)
E = 25mm (12.5mm + 12.5mm)
F = 30mm (10mm + 10mm + 10mm)
G = 37.5mm (12.5mm + 12.5mm + 12.5mm)

System reference: D150002

Table 10
Solutions to satisfy the 550°C criteria when tested in accordance with *BS 476: Part 21: 1987 (column encasement)*
lining thickness
▶ Refer to **C02. S01. P05**

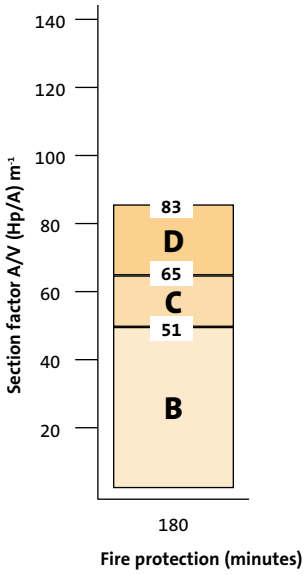

Key - Thickness of Glasroc F FIRECASE required

B = 40mm (20mm + 20mm)
C = 45mm (25mm + 20mm)
D = 50mm (25mm + 25mm)

System reference: D120003

NB The fire resistance performances are for imperforate linings with all joints taped and filled or skimmed. The quoted performances are achieved only if British Gypsum and Saint-Gobain Isover components are used throughout, and the Company's fixing recommendations are strictly observed. Any variation in the specifications should be checked with British Gypsum.

GypLyner ENCASE construction details

1

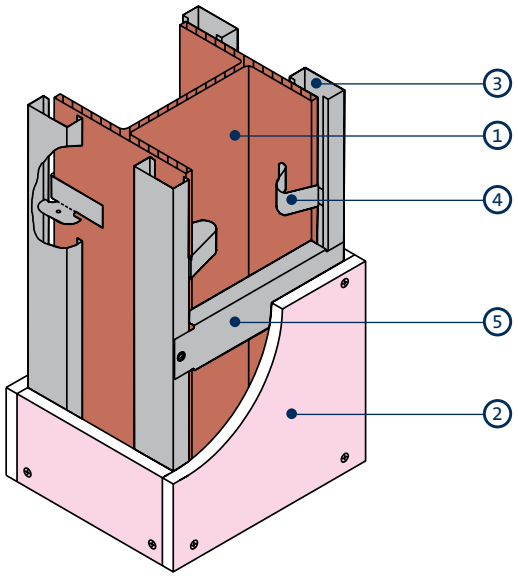

Four-sided column encasement - single layer

2

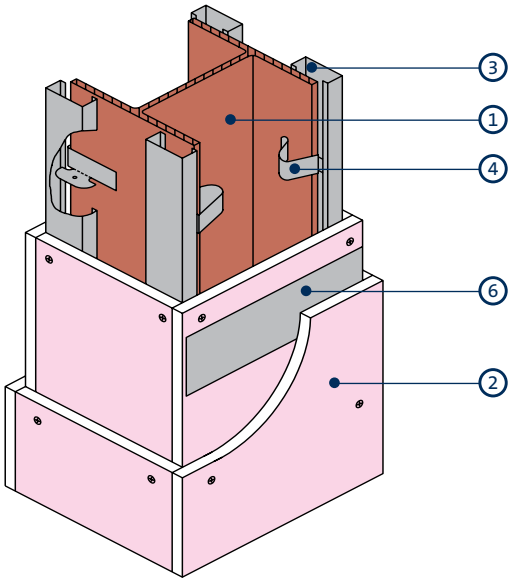

Four-sided column encasement - double layer

3

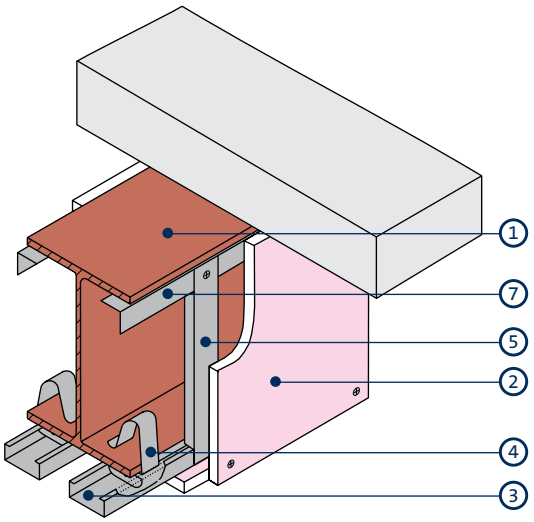

Three-sided beam encasement - single layer

4

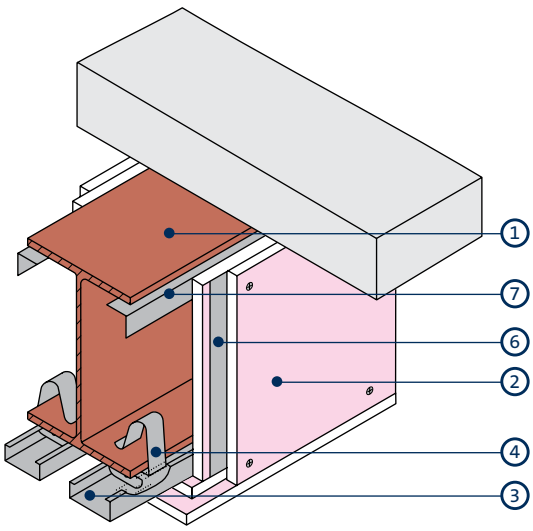

Three-sided beam encasement - double layer

1 Structural steel
2 Gyproc FireLine or Glasroc boards
3 Gypframe GL1 Lining Channel
4 Gypframe GL10 GypLyner Steel Framing Clip
5 Gypframe GL1 Lining Channel nogging or Gypframe GFT1 Fixing 'T' at board joints
6 Gypframe GFS1 Fixing Strap at board joints
7 Gypframe GA2 Steel Angle

GypLyner ENCASE construction details (continued)

5

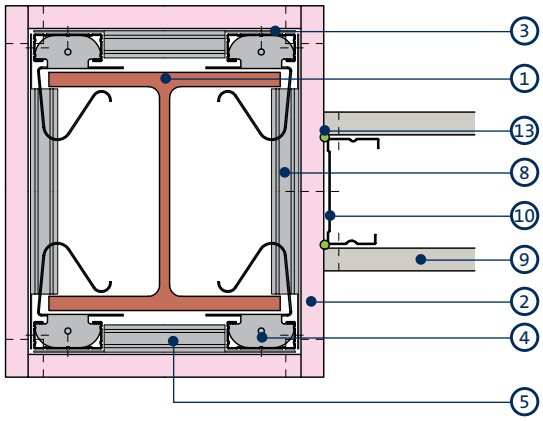

Column encasement and partition junction

6

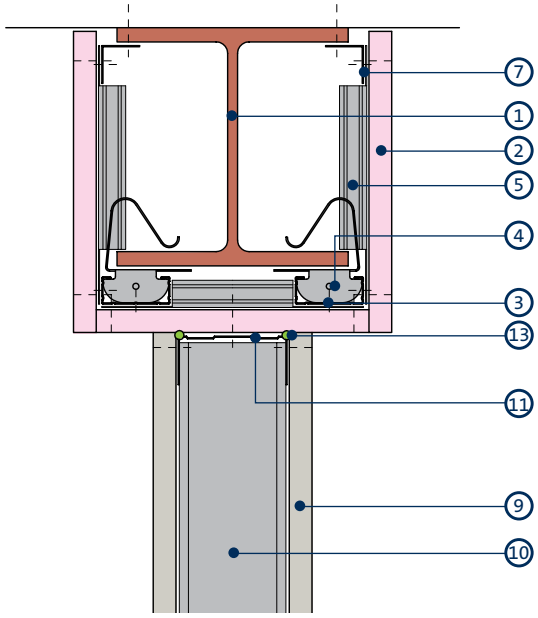

Beam encasement and partition junction

7

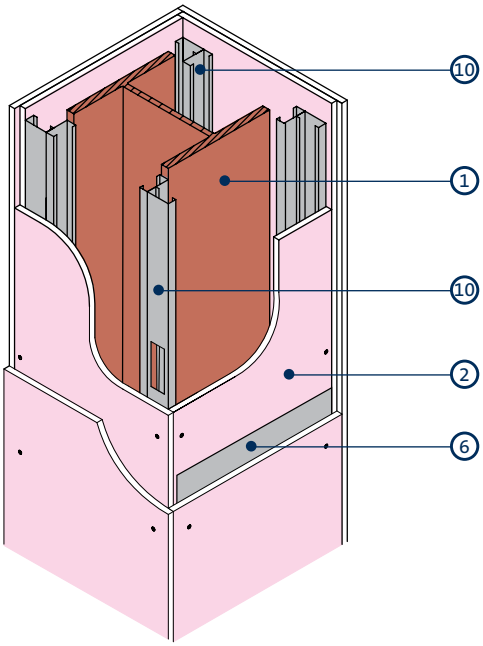

Boxing out for columns up to 600mm wide using **GypLyner IWL**

8

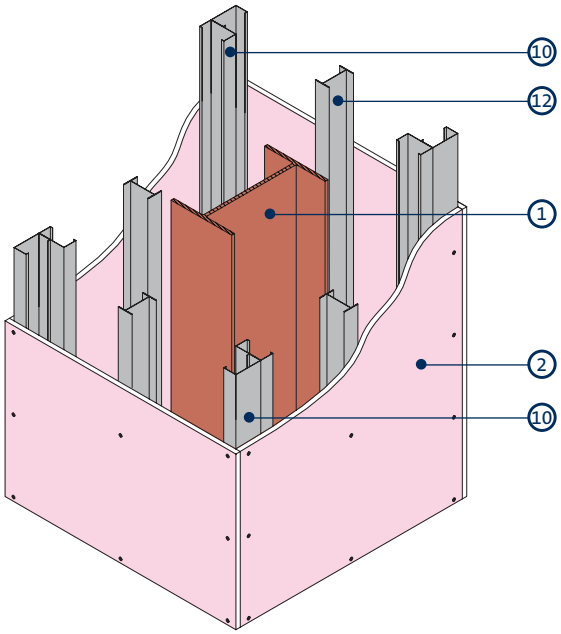

Boxing out for columns over 600mm wide using **GypLyner IWL**

1 Structural steel
2 Gyproc FireLine or Glasroc boards
3 Gypframe GL1 Lining Channel
4 Gypframe GL10 GypLyner Steel Framing Clip
5 Gypframe GL1 Lining Channel nogging or Gypframe GFT1 Fixing 'T' at board joints
6 Gypframe GFS1 Fixing Strap at board joints
7 Gypframe GA2 Steel Angle
8 Gypframe GL1 Lining Channel nogging at 600mm centres
9 Gyproc plasterboard
10 Gypframe 'C' Studs
11 Gypframe Folded Edge Standard Floor & Ceiling Channel
12 Gypframe 'I' Stud at 600mm centres
13 Gyproc Sealant

NB To optimise acoustic performance install Isover insulation within the encasement void.

GypLyner ENCASE system components

Gypframe metal components (▶ Refer to C10. S02. P02 for details)

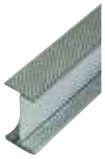

Gypframe 'I' Studs (48 I 50, 60 I 50, 60 I 70, 70 I 50, 70 I 70, 92 I 90, 146 I 80, 146 TI 90 Tabbed)
Enhanced strength stud that allows for increased lining height, designed to receive fixing of board. Allows an increase to the overall size of encasement.

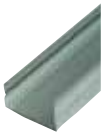

Gypframe 'C' Studs (48 S 50, 60 S 50, 70 S 50, 70 S 60, 95 S 50, 92 S 60, 92 S 10, 146 S 50)
Vertical stud providing acoustic and structural performances designed to receive fixing of board. Allows an increase to the overall size of encasement.

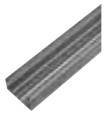

Gypframe GL1 Lining Channel
Main support channel to receive fixing of board.

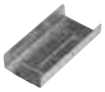

Gypframe GL3 Channel Connector
For joining two sections of Gypframe GL1 Lining Channel.

Gypframe GL10 GypLyner Steel Framing Clip
For connecting GL1 Lining Channel to flanges of structural steel.

Gypframe GA2 Steel Angle
Steel angle providing framing stability and board support.

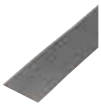

Gypframe GFS1 Fixing Strap
Used to support horizontal board joints.

Gypframe GFT1 Fixing 'T'
Used to support horizontal board joints.

Board products (▶ Refer to C10. S03. P02 for details)

Gyproc FireLine[1]
Gypsum plasterboard with fire resistant additives.

Glasroc F FIRECASE
Non-combustible glass-reinforced gypsum board giving up to 180 minutes fire protection.

Glasroc F MULTIBOARD
Non-combustible glass-reinforced gypsum board.

[1] Also available in a Moisture Resistant (MR) version. MR boards are specified in intermittent wet use areas.

Handy hint

- If you require 180 minutes fire protection, double layer Glasroc F FIRECASE provides the ideal solution.
- If you require a non-combustible lining Glasroc F FIRECASE provides the ideal solution.
- For semi-exposed applications, Glasroc F FIRECASE provides the ideal solution.

GypLyner ENCASE system components (continued)

Fixing products (▶ Refer to C10. S04. P02 for details)

British Gypsum Drywall Screws
Corrosion resistant self-tapping steel screws for fixing board to metal framing less than 0.8mm thick.

British Gypsum Wafer Head Drywall Screws
Corrosion resistant self-tapping steel screws for fixing metal to metal framing less than 0.8mm thick.

British Gypsum Collated Drywall Screws
Corrosion resistant self-tapping steel screws for fixing board to metal framing less than 0.8mm thick.

Glasroc F FIRECASE Screws
Corrosion resistant self-tapping steel screws with unique head design that countersinks itself into Glasroc F FIRECASE board to metal framing.

Plasterboard accessories (▶ Refer to C10. S05. P02 for details)

Gyproc Jointing Material
Jointing compounds, ready mixes and adhesives for reinforcement and finishing of board joints. Primers and sealers for treatment of boards for pre-decoration.

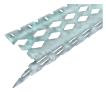

Gyproc Drywall Metal Angle Bead
Perforated, galvanised steel angle bead, designed as part of the jointing systems.

Gyproc Drywall Archbead
Extruded uPVC bead. This special design allows for curving around arches.

Gyproc Drywall Metal Edge Bead
Galvanised steel channel. Asymmetric profile with one perforated leg and pre-formed arris to accommodate jointing material.

Gyproc Drywall Plastic Edge Bead
Extruded uPVC channel. Asymmetric profile with one perforated leg and pre-formed arris to accommodate jointing material.

Finishing products (▶ Refer to C10. S06. P02 for details)

Thistle MultiFinish
To provide a plaster skim finish on most common backgrounds including undercoat plasters and plasterboard.

ThistlePro PureFinish
To provide a plaster skim finish with ACTIV*air* technology. Used to finish most common backgrounds including undercoat plasters and plasterboard. For more information refer to C02. S01. P49.

Thistle BoardFinish
To provide a plaster skim finish to Gyproc plasterboards.

ThistlePro DuraFinish
To provide a plaster skim finish and provide up to 60% tougher resistance to accidental damage.

Plaster accessories
Designed for the reinforcement and finishing of board joints before plaster skimming.

GypLyner ENCASE installation overview

This is intended to be a basic description of how the system is built.
For detailed installation guidance refer to the **British Gypsum Site Book**.

Four-sided protection to steel columns, Gypframe GL10 GypLyner Steel Framing Clips are friction-fitted onto the column / beam flanges at 800mm centres.

Gypframe GL1 Lining Channels are located over the clips to form the steel framework.

For two or three-sided beams or columns Gypframe GA2 Steel Angle is located to both sides of the wall / soffit flange and secured using appropriate fixings.

Boards are cut to width and fixed to all framing members using British Gypsum Drywall Screws.

Board-end joints are backed using horizontal noggings formed from an appropriate Gypframe component: Gypframe GL1 Lining Channel, Gypframe GFS1 Fixing Strap or Gypframe GFT1 Fixing 'T'.

Additional information

For full installation details, refer to the **British Gypsum Site Book**, available to download from british-gypsum.com