ZT510

Industrial Printer

User Guide

ZEBRA

P1095460-03EN

ZEBRA and the stylized Zebra head are trademarks of Zebra Technologies Corporation, registered in many jurisdictions worldwide. All other trademarks are the property of their respective owners.
© 2019 Zebra Technologies Corporation and/or its affiliates. All rights reserved.

Information in this document is subject to change without notice. The software described in this document is furnished under a license agreement or nondisclosure agreement. The software may be used or copied only in accordance with the terms of those agreements.

For further information regarding legal and proprietary statements, please go to:

SOFTWARE: http://www.zebra.com/linkoslegal
COPYRIGHTS: http://www.zebra.com/copyright
WARRANTY: http://www.zebra.com/warranty
END USER LICENSE AGREEMENT: http://www.zebra.com/eula

Terms of Use

Proprietary Statement

This manual contains proprietary information of Zebra Technologies Corporation and its subsidiaries (“Zebra Technologies”). It is intended solely for the information and use of parties operating and maintaining the equipment described herein. Such proprietary information may not be used, reproduced, or disclosed to any other parties for any other purpose without the express, written permission of Zebra Technologies.

Product Improvements

Continuous improvement of products is a policy of Zebra Technologies. All specifications and designs are subject to change without notice.

Liability Disclaimer

Zebra Technologies takes steps to ensure that its published Engineering specifications and manuals are correct; however, errors do occur. Zebra Technologies reserves the right to correct any such errors and disclaims liability resulting therefrom.

Limitation of Liability

In no event shall Zebra Technologies or anyone else involved in the creation, production, or delivery of the accompanying product (including hardware and software) be liable for any damages whatsoever (including, without limitation, consequential damages including loss of business profits, business interruption, or loss of business information) arising out of the use of, the results of use of, or inability to use such product, even if Zebra Technologies has been advised of the possibility of such damages. Some jurisdictions do not allow the exclusion or limitation of incidental or consequential damages, so the above limitation or exclusion may not apply to you.

Publication Date

November 11, 2019

Declaration of Conformity

We have determined that the Zebra printers identified as the

ZT510™

manufactured by:

Zebra Technologies Corporation
3 Overlook Point
Lincolnshire, Illinois 60069 U.S.A.

Have been shown to comply with the applicable technical standards of the FCC

For Home, Office, Commercial, and Industrial use

If no unauthorized change is made in the equipment,
and if the equipment is properly maintained and operated.

Compliance Information

FCC Compliance Statement

This device complies with Part 15 of the FCC Rules. Operation is subject to the following two conditions:

1. This device may not cause harmful interference, and
2. This device must accept any interference received, including interference that may cause undesired operation.

Note • This equipment has been tested and found to comply with the limits for a Class B digital device, pursuant to part 15 of the FCC Rules. These limits are designed to provide reasonable protection against harmful interference in a residential installation. This equipment generates, uses, and can radiate radio frequency energy and, if not installed and used in accordance with the instructions, may cause harmful interference to radio communications. However, there is no guarantee that interference will not occur in a particular installation. If this equipment does cause harmful interference to radio or television reception, which can be determined by turning the equipment off and on, the user is encouraged to try to correct the interference by one or more of the following measures:

- Reorient or relocate the receiving antenna.
- Increase the separation between the equipment and receiver.
- Connect the equipment into an outlet on a circuit different from that to which the receiver is connected.
- Consult the dealer or an experienced radio/TV technician for help.

FCC Radiation Exposure Statement (for printers with RFID encoders)

This equipment complies with FCC radiation exposure limits set forth for an uncontrolled environment. This equipment should be installed and operated with minimum distance 20cm between the radiator and your body.

This transmitter must not be co-located or operating in conjunction with any other antenna or transmitter.

Canadian DOC Compliance Statement

This Class B digital apparatus complies with Canadian ICES-003.

Cet appareil numérique de la classe B est conforme à la norme NMB-003 du Canada.

Contents

Declaration of Conformity 3

Compliance Information 4

About This Document 11

Who Should Use This Document 12

How This Document Is Organized 12

1 • Introduction 13

Printer Components 14

Printer Options 15

Communication Interfaces 16

Data Cables 17

Standard Control Panel 18

Navigating through Screens in the Standard Display 19

Idle Display, Home Menu, and User Menus in the Standard Display 21

Ribbon Overview 22

When to Use Ribbon 22

Coated Side of Ribbon 22

2 • Printer Setup and Operation 25

Handling the Printer 26

Unpack and Inspect the Printer 26

Store the Printer 26

Service the Printer 26

Ship the Printer 27

Select a Location for the Printer 28

Select a Print Mode 29

Load the Media 30

Insert the Media into the Printer 30

Tear-Off Mode 34
Peel-Off Mode or Applicator Mode 39
Rewind Mode 47
Cutter Mode or Delayed Cut Mode 55
Load the Ribbon 60
Install the Printer Driver and Connect the Printer to the Computer 65
Install Zebra Setup Utilities 65
Connect a Computer to the Printer's USB Port 74
Connect a Computer to the Printer's Serial or Parallel Port 78
Connect to Your Network through the Printer's Ethernet Port 86
Connect the Printer to Your Wireless Network 94
Print a Test Label and Make Adjustments 100

3 • Printer Configuration and Adjustment 103

Adjust Printer Settings 104
DARKNESS 106
PRINT SPEED 107
MEDIA TYPE 108
PRINT METHOD 109
TEAR OFF 110
PRINT WIDTH 111
PRINT MODE 112
LABEL TOP 113
LEFT POSITION 114
REPRINT MODE 115
LABEL LENGTH MAX 116
PRINT INFORMATION 117
IDLE DISPLAY 119
POWER UP ACTION 120
HEAD CLOSE ACTION 121
LOAD DEFAULTS 122
MEDIA/RIBBON CAL 124
DIAGNOSTIC MODE 125
ENERGY STAR 126
CONFIG INFO TO USB 127
ZBI ENABLED? 128
RUN ZBI PROGRAM 129
STOP ZBI PROGRAM 130
PRINT USB FILE 131
COPY USB FILE TO E: 132
STORE E: FILE TO USB 133
PRINT STATION 134
PASSWORD PROTECT 135

PRINT TEST FORMAT 136
ACTIVE PRINT SERVER 137
PRIMARY NETWORK 138
WIRED IP ADDRESS 139
WIRED SUBNET MASK 140
WIRED GATEWAY 141
WIRED IP PROTOCOL 142
WIRED MAC ADDRESS 143
WLAN IP ADDRESS 144
WLAN SUBNET MASK 145
WLAN GATEWAY 146
WLAN IP PROTOCOL 147
WLAN MAC ADDRESS 148
ESSID 149
CHANNEL 150
SIGNAL 151
IP PORT 152
IP ALTERNATE PORT 153
RESET NETWORK 154
VISIBILITY AGENT 155
LANGUAGE 156
COMMAND LANGUAGE 157
COMMAND CHAR 158
CONTROL CHAR 159
DELIMITER CHAR 160
ZPL MODE 161
VIRTUAL DEVICE 162
SENSOR TYPE 163
LABEL SENSOR 164
TAKE LABEL 165
BAUD RATE 166
DATA BITS 167
PARITY 168
HOST HANDSHAKE 169
WML 170
BLUETOOTH ADDRESS 171
MODE 172
DISCOVERY 173
CONNECTED 174
BT SPEC VERSION 175
MIN SECURITY MODE 176
Calibrate the Ribbon and Media Sensors 177

Adjust the Printhead Pressure and Toggle Position 183
Toggle Position Adjustment 184
Printhead Pressure Adjustment 186
Adjust the Transmissive Media Sensors 188
Remove Used Ribbon 191
Install the Rewind/Liner Take-Up Plate 193
Peel Mode/Applicator Mode 193
Rewind Mode 195

4 • Routine Maintenance 197

Cleaning Schedule and Procedures 198
Clean the Exterior, the Media Compartment, and the Sensors 199
Clean the Printhead and Platen Roller 200
Clean and Lubricate the Cutter Module 204
Replacing Printer Components 213
Ordering Replacement Parts 213
Recycling Printer Components 213
Ordering Supplies 213
Lubrication 213

5 • Diagnostics and Troubleshooting 215

QR Codes and QuickHelp Pages 216
Judging Barcode Quality 217
Printer Diagnostic Tests 219
Print Test Format Option 220
Optimal Darkness and Speed Test 225
Communication Diagnostics Test 227
Sensor Profile 228
Indicator Lights 230
Troubleshooting 232
Alerts and Error Messages 232
Printing Issues 236
Ribbon Issues 240
Communications Issues 242
Miscellaneous Issues 243

6 • Using a USB Host Port and the NFC Capabilities 247

Items Required for the Exercises 248
Files for Completing the Exercises 248
USB Host 251
Exercise 1: Copy Files to a USB Flash Drive and Perform USB Mirror 251
Exercise 2: Print a Label Format from a USB Flash Drive 253
Exercise 3: Copy Files to/from a USB Flash Drive 254

Exercise 4: Enter Data for a Stored File with a USB Keyboard and Print a Label . . 256
Near Field Communication (NFC) 257
Exercise 5: Enter Data for a Stored File with a Smart Device and Print a Label . . . 258

7 • Specifications 261

General Specifications 262
Power Specifications 265
Power Cord Specifications 266
Wireless Specifications 267
Printing Specifications 268
Media Specifications 269
Ribbon Specifications 270

Glossary 271

Index 277

Notes •

About This Document

This section provides you with contact information, document structure and organization, and additional reference documents.

Contents

Who Should Use This Document 12
How This Document Is Organized 12

Who Should Use This Document

This User Guide is intended for use by any person who needs to perform routine maintenance, upgrade, or troubleshoot problems with the printer.

How This Document Is Organized

The User Guide is set up as follows:

Section	Description
Introduction on page 13	This section provides a high-level overview of the printer and its components.
Printer Setup and Operation on page 25	This section assists the technician with initial setup and operation of the printer.
Printer Configuration and Adjustment on page 103	This section assists you with configuration of and adjustments to the printer.
Routine Maintenance on page 197	This section provides routine cleaning and maintenance procedures.
Diagnostics and Troubleshooting on page 215	This section provides diagnostic tests and other information that may help you to optimize printing or to troubleshoot issues with your printer.
Using a USB Host Port and the NFC Capabilities on page 247	This section will help you to learn how to use an optional USB host port on your Zebra printer and how to use the printer's Near Field Communication (NFC) capability. The information is presented in the form of exercises with some SGD commands listed for advanced users.
Specifications on page 261	This section lists general printer specifications, printing specifications, ribbon specifications, and media specifications.
Glossary on page 271	The glossary provides a list of common terms.

1

Introduction

This section provides a high-level overview of the printer and its components.

Contents

Printer Options 15
Communication Interfaces 16
Printer Components 14
Standard Control Panel 18
Navigating through Screens in the Standard Display 19
Idle Display, Home Menu, and User Menus in the Standard Display 21
Types of Media 22
Ribbon Overview 22
When to Use Ribbon 22
Coated Side of Ribbon 22

Printer Components

Note • Some components are highlighted in **light blue** in the illustrations in this manual for emphasis or clarity.

Figure 1 shows the components inside the media compartment of a standard printer. Depending on the printer model and the installed options, your printer may look slightly different. The components that are labeled are mentioned in procedures throughout this manual.

Figure 1 • Printer Components

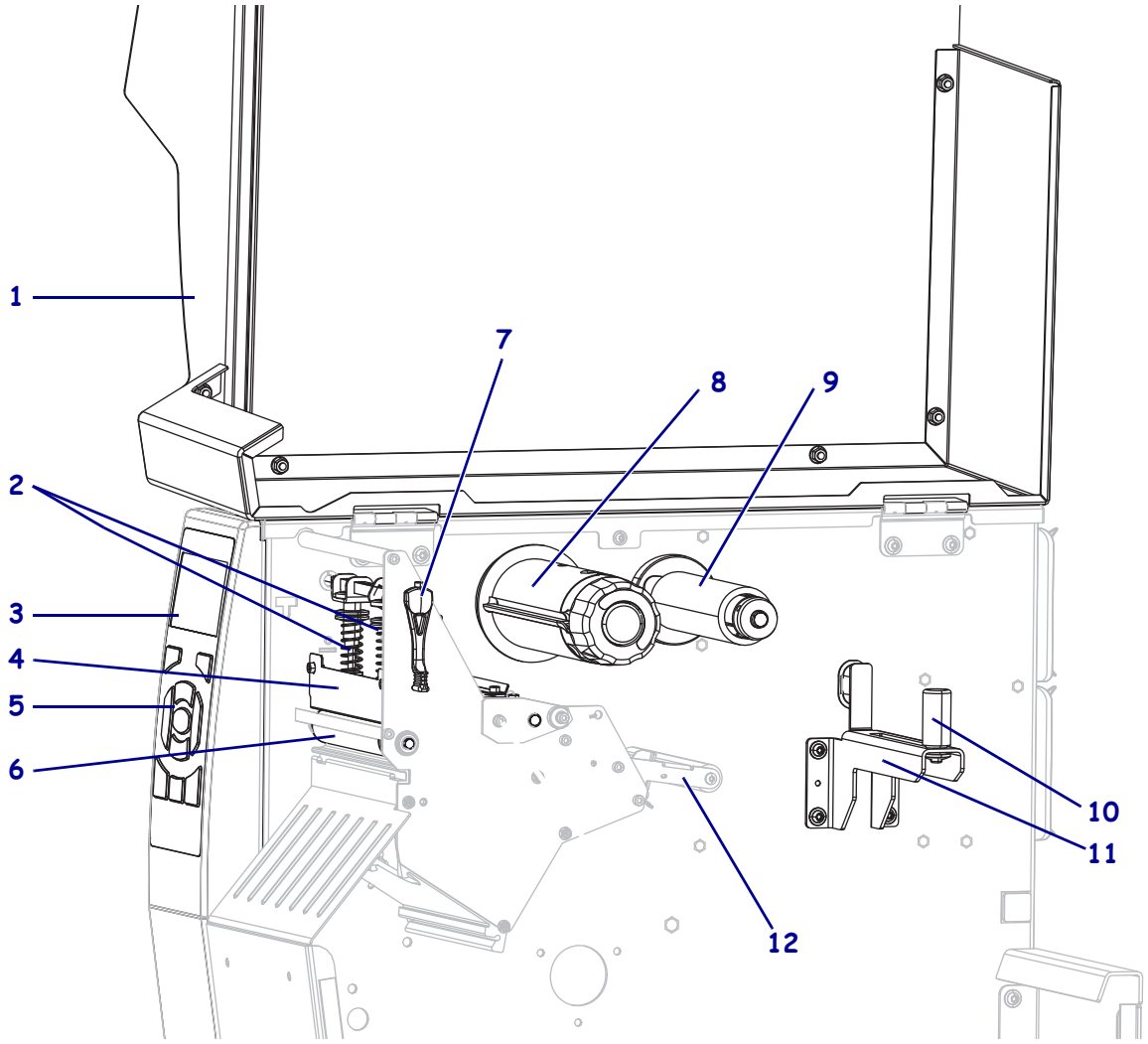

1	Media door
2	Printhead pressure toggles
3	Control panel display
4	Printhead assembly
5	Control panel
6	Platen roller

7	Printhead-open lever
8	Ribbon take-up spindle
9	Ribbon supply spindle
10	Media dancer assembly
11	Media supply guide
12	Media supply spindle

Printer Options

The available printer options are shown in Figure 2. For information about the print modes that can be used with the printer options, see *Select a Print Mode* on page 29.

Figure 2 • Printer Options

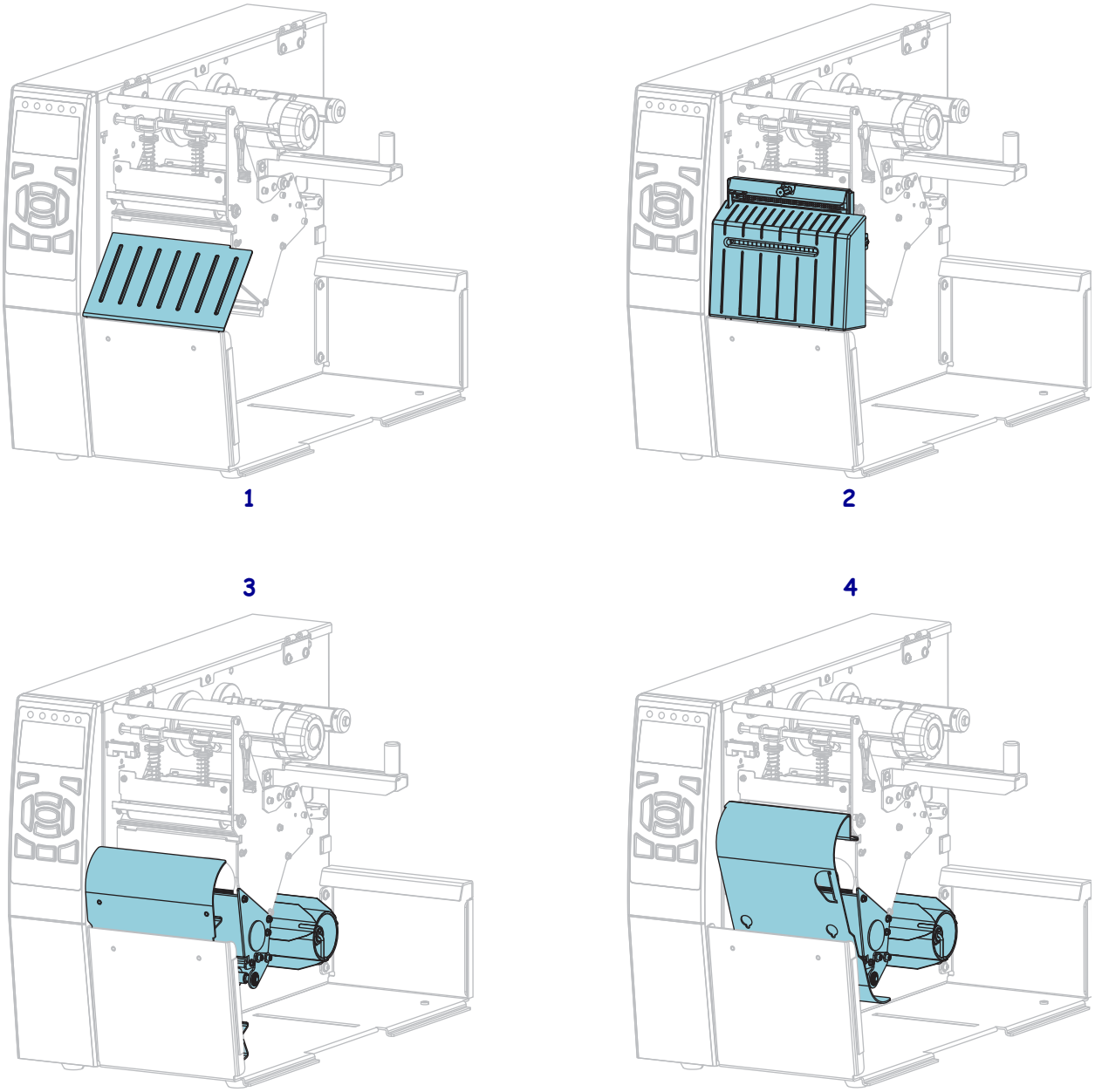

1	Tear-Off (standard)
2	Cutter option
3	Rewind option set for Peel mode
4	Rewind option set for Rewind mode

Communication Interfaces

The available communication interface connectors are shown in Figure 3. Your printer may not have all of the connections shown here, and a ZebraNet wireless print server option may also be present on your printer. You may send label formats to the printer through any communication interface that is available on your printer.

- For detailed information about the types of connections available, see *Communication Interface Specifications* on page 262.
- For instructions on when and how to connect your computer to one ore more of these communication interfaces, see *Install the Printer Driver and Connect the Printer to the Computer* on page 65.

Figure 3 • Location of Communication Interfaces

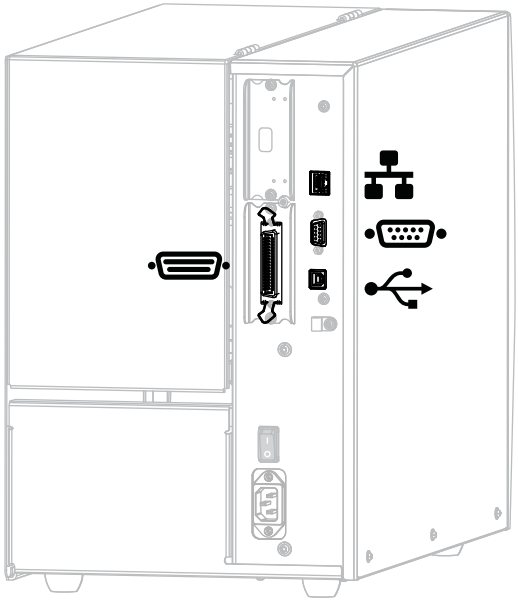

	Parallel port
	Internal wired Ethernet print server
	Serial port
	USB port

Data Cables

You must supply all data cables for your application. The use of cable strain relief clamps is recommended.

Ethernet cables do not require shielding, but all other data cables must be fully shielded and fitted with metal or metalized connector shells. Unshielded data cables may increase radiated emissions above the regulated limits.

To minimize electrical noise pickup in the cable:

- Keep data cables as short as possible.
- Do not bundle the data cables tightly with the power cords.
- Do not tie the data cables to power wire conduits.

Standard Control Panel

The standard control panel indicates the printer's current status and allows the user to control basic printer operation. An optional color touch control panel is available for purchase. Because it functions differently, it is documented in a separate User Guide.

Figure 4 • Control Panel

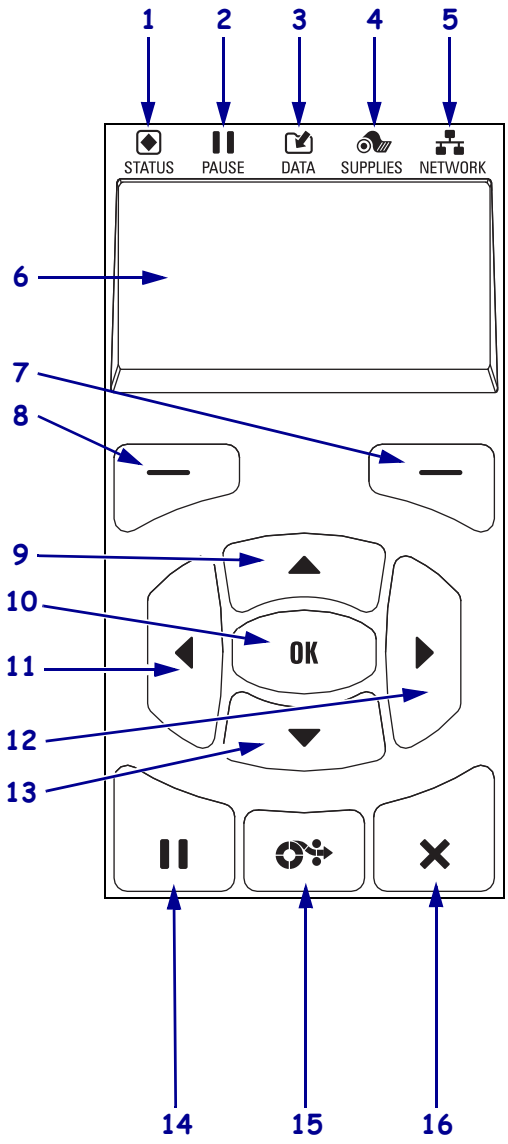

1	**STATUS light**	These **indicator lights** show the current status of the printer. For more information, see *Indicator Lights* on page 230.
2	**PAUSE light**	
3	**DATA light**	
4	**SUPPLIES light**	
5	**NETWORK light**	
6	The **display** shows the printer's current status and allows the user to navigate the menu system.	
7	**RIGHT SELECT button**	These buttons execute the commands shown directly above them in the display.
8	**LEFT SELECT button**	
9	The **UP ARROW button** changes the parameter values. Common uses are to increase a value or to scroll through choices.	
10	The **OK button** selects or confirms what is shown on the display.	
11	The **LEFT ARROW button**, which is active only in the menu system, navigates to the left.	
12	The **RIGHT ARROW button**, which is active only in the menu system, navigates to the right.	
13	The **DOWN ARROW button** changes the parameter values. Common uses are to decrease a value or to scroll through choices.	
14	The **PAUSE button** starts or stops printer operation when pressed.	
15	The **FEED button** forces the printer to feed one blank label each time the button is pressed.	
16	The **CANCEL button** cancels label formats when the printer is paused. • Press once to cancel the next label format. • Press and hold for 2 seconds to cancel all label formats.	

Navigating through Screens in the Standard Display

Table 1 shows the following:

- the options available for navigating through the screens in the control panel display
- how to select or modify things shown on the display

Table 1 • Navigation

Idle Display
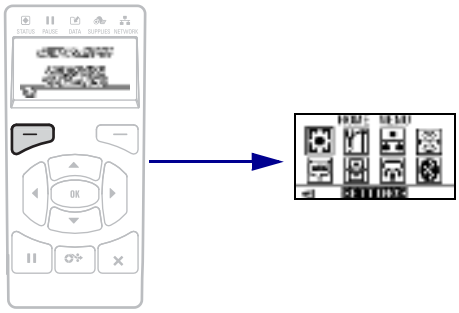 At the Idle Display (Figure 5 on page 21), press LEFT SELECT to go to the printer's Home menu (Figure 6 on page 21).

Home Menu		
To move from icon to icon in the Home menu, press any of the ARROW buttons. When an icon is selected, its colors are reversed to highlight it. SETTINGS menu icon SETTINGS menu icon highlighted	To select the highlighted menu icon and enter the menu, press OK.	Press LEFT SELECT to exit the Home menu and return to the Idle Display. The printer automatically returns to the Idle Display after 15 seconds of inactivity in the Home menu.

Table 1 • Navigation (Continued)

User Menus	
Press LEFT SELECT to return to the Home menu. The printer automatically returns to the Home menu after 15 seconds of inactivity in a user menu.	▲ and ▼ indicate that a value can be changed. Any changes that you make are saved immediately. Press the UP ARROW or DOWN ARROW to scroll through accepted values.
To scroll through the items in a user menu, press the LEFT ARROW or RIGHT ARROW.	A word in the bottom-right corner of the display indicates an available action. Press OK or press RIGHT SELECT to perform the action shown.
Menu Shortcuts	
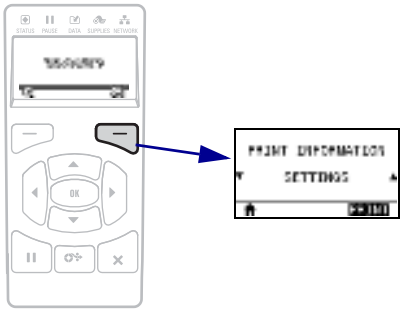	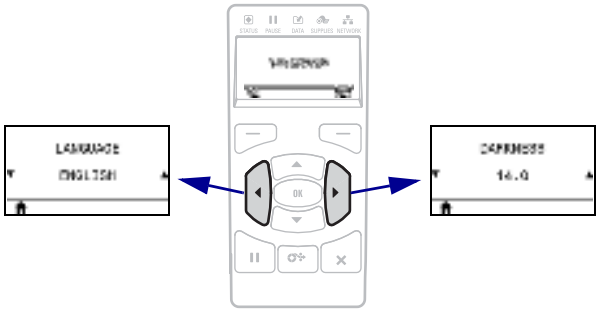
To go to the next user menu from a menu shortcut, press OK or press RIGHT SELECT to select GO.	To continue to navigate in the same user menu, press the LEFT ARROW or RIGHT ARROW.

Idle Display, Home Menu, and User Menus in the Standard Display

The printer's control panel includes a display, where you can view the printer's status or change its operating parameters. In this section, you will learn how to navigate through the printer's menu system and change values for menu items.

Idle Display After the printer completes the power-up sequence, it moves to the Idle Display (Figure 5). The printer displays the current firmware version and its IP address.

Figure 5 • Idle Display

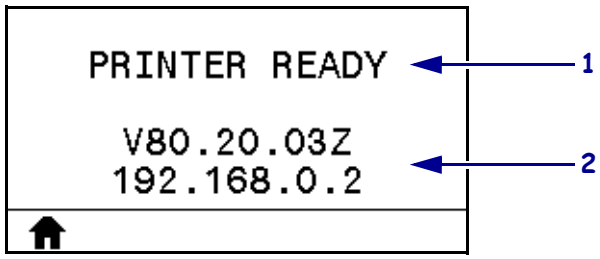

1	The printer's current status
2	The printer's firmware version (top line) and its IP address (bottom line)
	Home menu shortcut

Home Menu Use the Home menu (Figure 6) to access the printer's operating parameters through the eight user menus (see *Adjust Printer Settings* on page 104). Click any of the icons in Figure 6 to go to the descriptions of the menu items for that user menu.

Figure 6 • Home Menu

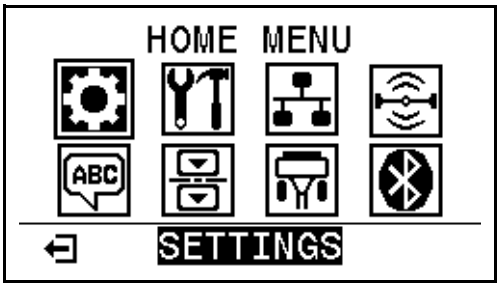

	Exit and return to the Idle Display (Figure 5).

Ribbon Overview

Ribbon is a thin film that is coated on one side with wax, resin, or wax resin, which is transferred to the media during the thermal transfer process. The media determines whether you need to use ribbon and how wide the ribbon must be.

When ribbon is used, it must be as wide as or wider than the media being used. If the ribbon is narrower than the media, areas of the printhead are unprotected and subject to premature wear.

When to Use Ribbon

Thermal transfer media requires ribbon for printing while direct thermal media does not. To determine if ribbon must be used with a particular media, perform a media scratch test.

To perform a media scratch test, complete these steps:

1. Scratch the print surface of the media rapidly with your fingernail.
2. Did a black mark appear on the media?

If a black mark...	Then the media is...
Does not appear on the media	**Thermal transfer**. A ribbon is required.
Appears on the media	**Direct thermal**. No ribbon is required.

Coated Side of Ribbon

Ribbon can be wound with the coated side on the inside or outside (Figure 7). This printer can only use ribbon that is coated on the outside.

If you are unsure which side of a particular roll of ribbon is coated, perform an adhesive test or a ribbon scratch test to determine which side is coated.

Figure 7 • Ribbon Coated on Outside or Inside

Adhesive Test

If you have labels available, perform the adhesive test to determine which side of a ribbon is coated. This method works well for ribbon that is already installed.

To perform an adhesive test, complete these steps:

1. Peel a label from its liner.
2. Press a corner of the sticky side of the label to the outer surface of the roll of ribbon.
3. Peel the label off of the ribbon.
4. Observe the results. Did flakes or particles of ink from the ribbon adhere to the label?

If ink from the ribbon...	Then...
Adhered to the label	The ribbon is coated on the outside and **can** be used in this printer.
Did not adhere to the label	The ribbon is coated on the inside and **cannot** be used in this printer. To verify this result, repeat the test on the other surface of the roll of ribbon.

Ribbon Scratch Test

Perform the ribbon scratch test when labels are unavailable.

To perform a ribbon scratch test, complete these steps:

1. Unroll a short length of ribbon.
2. Place the unrolled section of ribbon on a piece of paper with the outer surface of the ribbon in contact with the paper.
3. Scratch the inner surface of the unrolled ribbon with your fingernail.
4. Lift the ribbon from the paper.

5. Observe the results. Did the ribbon leave a mark on the paper?

If the ribbon...	Then...
Left a mark on the paper	The ribbon is coated on the outside and **can** be used in this printer.
Did not leave a mark on the paper	The ribbon is coated on the inside and **cannot** be used in this printer. To verify this result, repeat the test on the other surface of the roll of ribbon.

2

Printer Setup and Operation

This section assists the technician with initial setup and operation of the printer.

Contents

Handling the Printer 26
Unpack and Inspect the Printer 26
Store the Printer 26
Service the Printer 26
Ship the Printer 27
Select a Location for the Printer 28
Select a Print Mode 29
Load the Media 30
Insert the Media into the Printer 30
Tear-Off Mode 34
Peel-Off Mode or Applicator Mode 39
Rewind Mode 47
Cutter Mode or Delayed Cut Mode 55
Load the Ribbon 60
Install the Printer Driver and Connect the Printer to the Computer 65
Install Zebra Setup Utilities 65
Connect a Computer to the Printer's USB Port 74
Connect a Computer to the Printer's Serial or Parallel Port 78
Connect to Your Network through the Printer's Ethernet Port 86
Connect the Printer to Your Wireless Network 94
Print a Test Label and Make Adjustments 100

Handling the Printer

This section describes how to handle your printer.

Unpack and Inspect the Printer

When you receive the printer, immediately unpack it and inspect for shipping damage.

- Save all packing materials.
- Check all exterior surfaces for damage.
- Raise the media door, and inspect the media compartment for damage to components.

If you discover shipping damage upon inspection:

- Immediately notify the shipping company and file a damage report.
- Keep all packaging material for shipping company inspection.
- Notify your authorized Zebra reseller

Important • Zebra Technologies is not responsible for any damage incurred during the shipment of the equipment and will not repair this damage under warranty.

Store the Printer

If you are not placing the printer into immediate operation, repackage it using the original packing materials. You may store the printer under the following conditions:

- Temperature: –40°F to 140°F (–40° to 60°C)
- Relative humidity: 5% to 85% non-condensing

Service the Printer

If you have a problem using the printer, contact your facility's technical or systems support. If there is a problem with the printer, they will contact the Zebra Global Customer Support Center at: http://www.zebra.com/support.

When contacting Zebra Global Customer Support, have the following information available:

- Serial number of the unit
- Model number or product name
- Firmware version number

Zebra responds to calls by e-mail, telephone, or fax within the time limits set forth in service agreements. If your problem cannot be solved by Zebra Global Customer Support, you may need to return your equipment for servicing and will be given specific directions.

If you purchased your product from a Zebra business partner, please contact that business partner for support.

Ship the Printer

Zebra is not responsible for any damages incurred during shipment if an approved shipping container is not used. Shipping the units improperly can possibly void the warranty.

If you must ship the printer:

- Turn off (**O**) the printer, and disconnect all cables.
- Remove any media, ribbon, or loose objects from the printer interior.
- Close the printhead.
- Carefully pack the printer into the original container or a suitable alternate container to avoid damage during transit. A shipping container can be purchased from Zebra if the original packaging has been lost or destroyed.

Select a Location for the Printer

Select a location for the printer that meets these conditions:

- **Surface:** The surface where the printer will be located must be solid, level, and of sufficient size and strength to hold the printer.
- **Space:** The area where the printer will be located must include enough space for ventilation and for accessing the printer components and connectors. To allow for proper ventilation and cooling, leave open space on all sides of the printer.

Caution • Do not place any padding or cushioning material behind or under the printer because this restricts air flow and could cause the printer to overheat.

- **Power:** The printer should be within a short distance of an appropriate power outlet that is easily accessible.
- **Data communication interfaces:** The printer must be within range of your WLAN radio (if applicable) or within an acceptable range for other connectors to reach your data source (usually a computer). For more information on maximum cable lengths and configuration, see *General Specifications* on page 262.
- **Operating conditions:** Your printer is designed to function in a wide range of environmental and electrical conditions, including a warehouse or factory floor. Table 2 shows the temperature and relative humidity requirements for the printer when it is operating.

Table 2 • Operating Temperature and Humidity

Mode	Temperature	Relative Humidity
Thermal Transfer	40° to 104°F (5° to 40°C)	20 to 85% non-condensing
Direct Thermal	32° to 104°F (0° to 40°C)	

Select a Print Mode

Use a print mode that matches the media being used and the printer options available. The media path is the same for roll and fanfold media. To set the printer to use an available print mode, see *PRINT MODE* on page 112.

Table 3 • Print Modes and Printer Options

Print Mode	Description
TEAR OFF	*This mode (default) can be used with any printer options and most media types.* The printer prints label formats as it receives them. The printer operator can tear off the printed labels any time after they print.
PEEL-OFF	*This mode can be used if the printer has a rewind option.* The printer peels the label from the liner during printing and then pauses until the label is removed. The backing is wound on the rewind spindle without using the rewind plate.
REWIND	*This mode can be used only if the printer has a rewind option.* The printer prints without pausing between labels. The media is wound onto a core after printing. The rewind plate is used to keep the labels from separating from the backing.
CUTTER	*This mode can be used only if the printer has a cutter option.* The printer cuts between labels after each one is printed.
DELAYED CUT	*This mode can be used only if the printer has a cutter option.* The printer waits for a delayed cut ZPL command (~JK) before it cuts the last printed label.
LINERLESS PEEL*	* *Reserved for future use.*
LINERLESS REWIND*	
LINERLESS TEAR*	
APPLICATOR	*This mode is for use with a machine that applies labels.* The printer prints when it receives a signal from the applicator. Refer to the Advanced User Information section of the Maintenance Manual for additional information about the applicator interface.

Load the Media

Use the instructions in this section for loading roll or fanfold media in the appropriate print mode for your needs.

Caution • While performing any tasks near an open printhead, remove all rings, watches, hanging necklaces, identification badges, or other metallic objects that could touch the printhead. You are not required to turn off the printer power when working near an open printhead, but Zebra recommends it as a precaution. If you turn off the power, you will lose all temporary settings, such as label formats, and you must reload them before you resume printing.

Insert the Media into the Printer

The majority of the illustrations in this section show roll media because the media loading path is the same for both roll and fanfold media.

To load media, complete these steps:

1. Raise the media door.

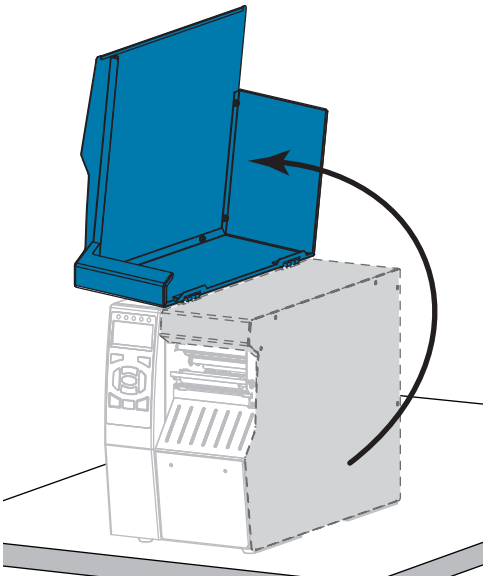

2. Remove and discard any tags or labels that are torn or dirty or that are held by adhesives or tape.

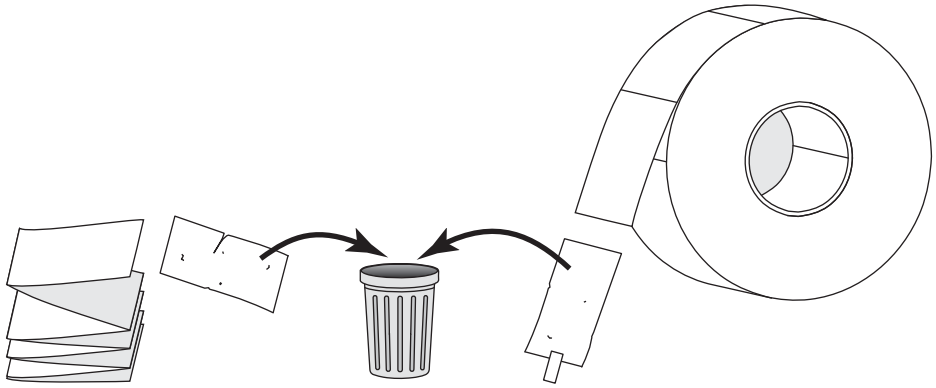

3. Insert roll or fanfold media into the printer.

Roll Media

a. Pull out the media supply guide as far as it goes.

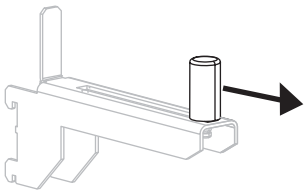

b. Place the roll of media on the media supply hanger. Push the roll back as far as it will go.

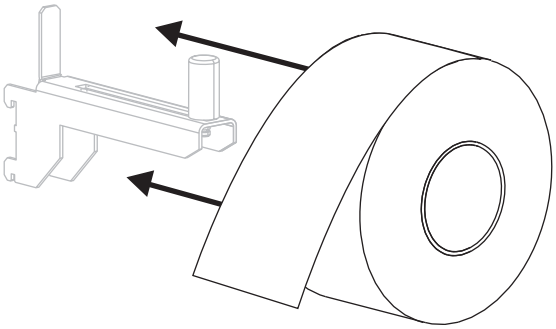

Fanfold Media

a. Fanfold media can be stored behind or under the printer. Depending on where the media is stored, feed the media from behind or through the bottom access slot.

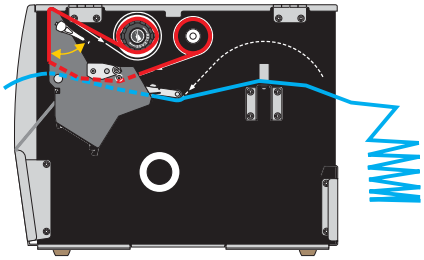

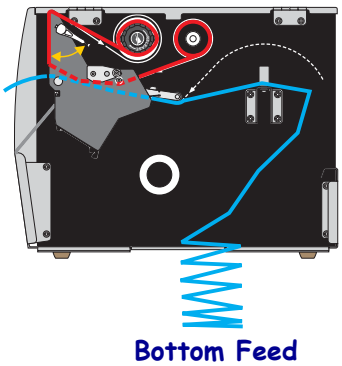

Roll Media (Continued)

c. Slide in the media supply guide until it touches the edge of the roll.

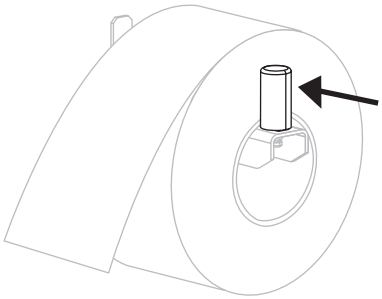

Fanfold Media (Continued)

b. Pull out the media supply guide as far as it goes.

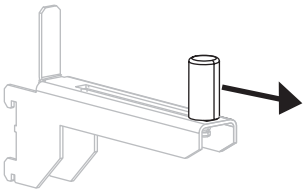

c. Drape the media over the media supply hanger.

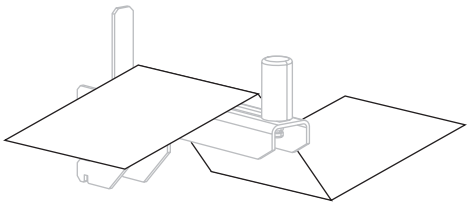

d. Slide in the media supply guide until it touches the edge of the media.

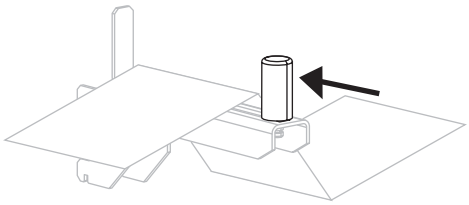

4. In which print mode will your printer be operating? (For more information on print modes, see *Select a Print Mode* on page 29.)

If using…	Then…
TEAR OFF 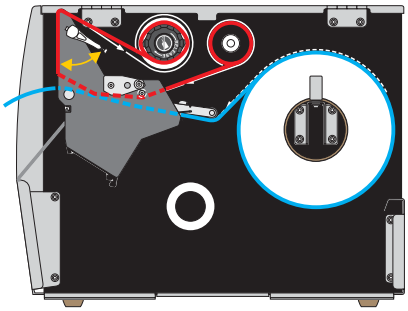	Continue with *Tear-Off Mode* on page 34.
PEEL-OFF or APPLICATOR 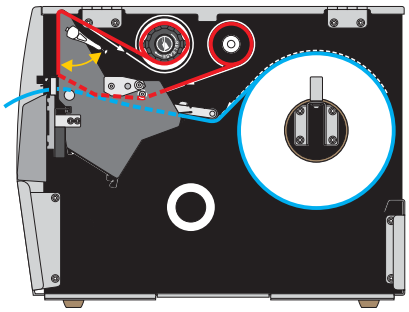	Continue with *Peel-Off Mode or Applicator Mode* on page 39.
REWIND 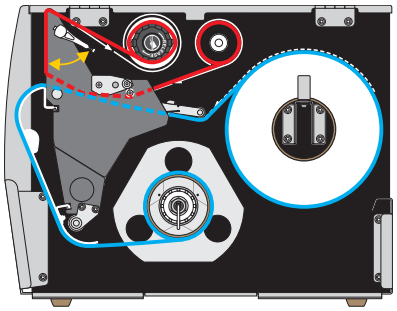	Continue with *Rewind Mode* on page 47.
CUTTER or DELAYED CUT 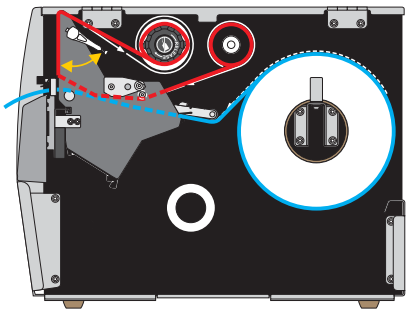	Continue with *Cutter Mode or Delayed Cut Mode* on page 55.

Tear-Off Mode

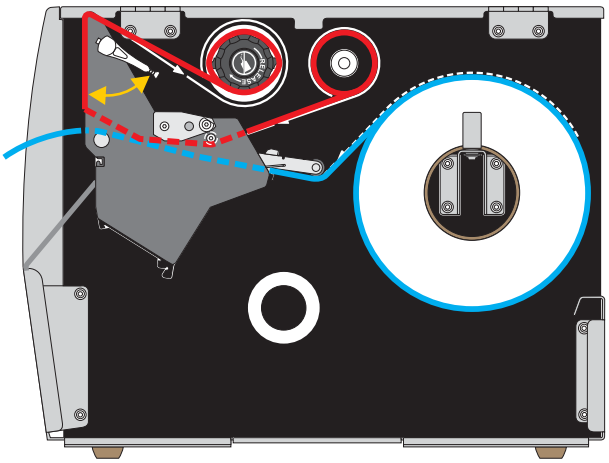

1. If you have not already done so, follow the instructions in the section *Insert the Media into the Printer* on page 30.

2. **Caution** • The printhead may be hot and could cause severe burns. Allow the printhead to cool.

   Open the printhead assembly by rotating the printhead-open lever upward.

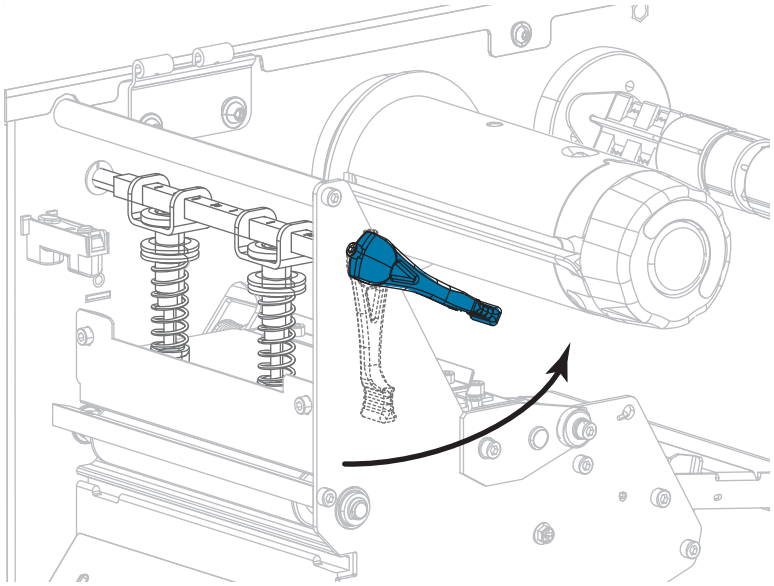

3. Loosen the thumb screw that is located on the bottom of the outer media guide (**1**).

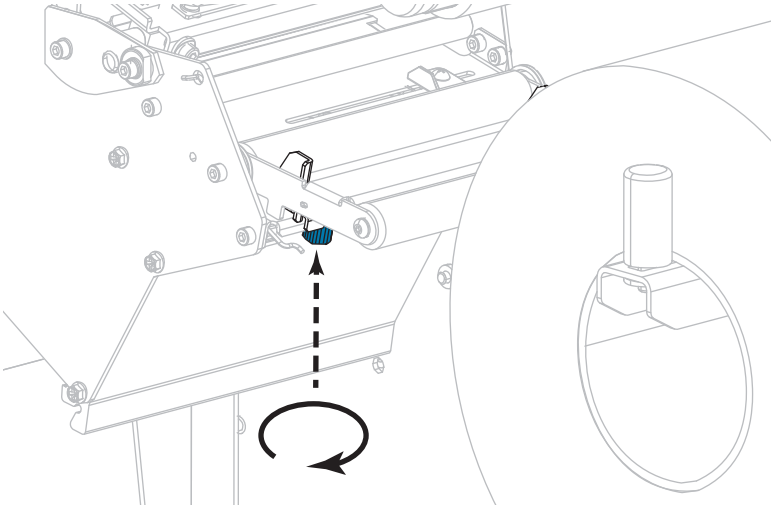

4. Slide the outer media guide all the way out.

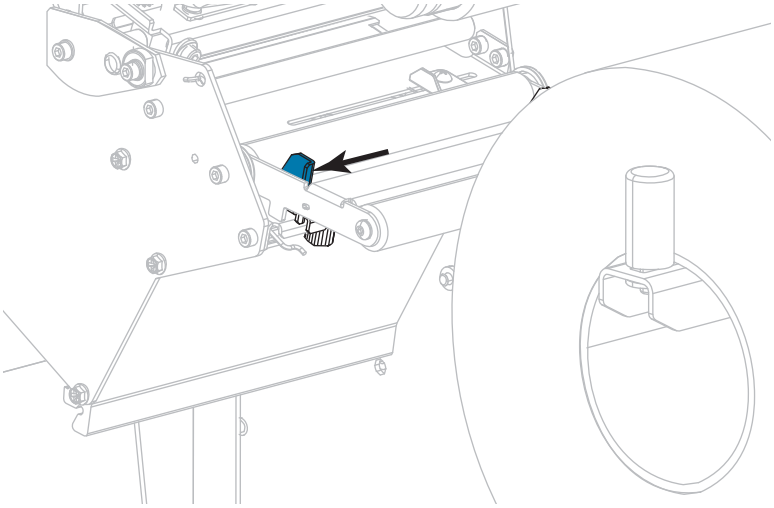

5. Thread the media under the media dancer assembly roller (**1**), the media guide roller (**2**), and then the upper media sensor (**3**).

Important • Make sure that you thread the media under these components. If you thread the media over them, the media obstructs the ribbon sensor and causes a false RIBBON OUT error.

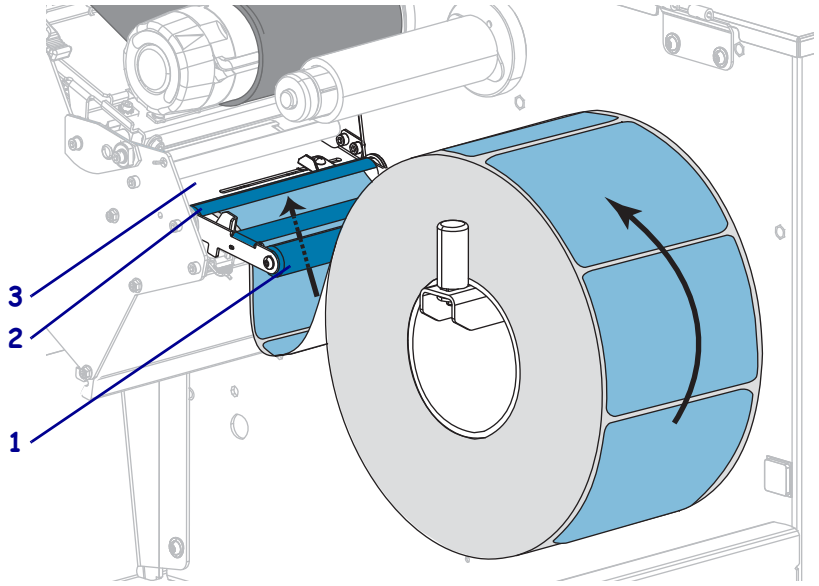

6. **Caution** • The printhead may be hot and could cause severe burns. Allow the printhead to cool.

Push the media forward until it passes under the printhead assembly (**1**), under the snap plate (**2**), and then over the platen roller (**3**).

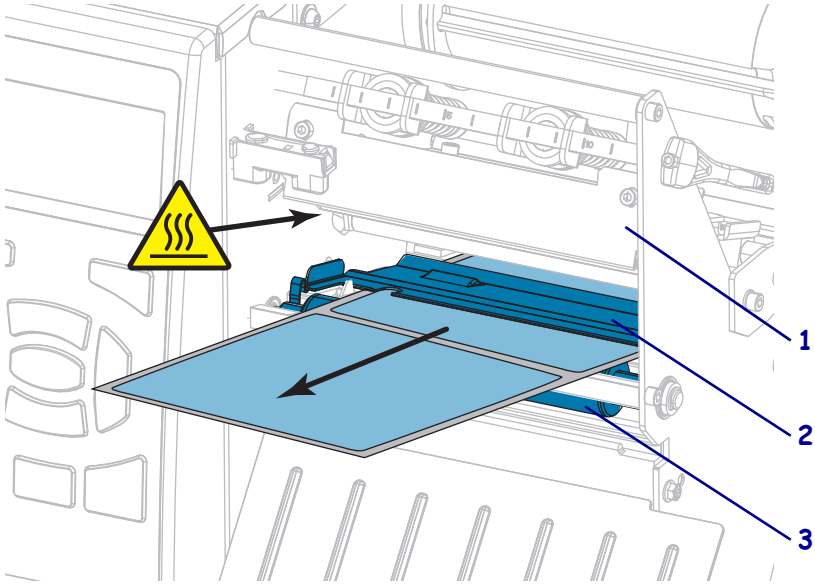

7. Does the media that you are using require ribbon for printing? If you are not sure, see *When to Use Ribbon* on page 22.

If using…	Then…
Direct Thermal media (no ribbon needed)	Continue with step 8.
Thermal Transfer media (ribbon needed)	**a.** If you have not already done so, load ribbon in the printer. See *Load the Ribbon* on page 60. **b.** Continue with step 8.

8. Push back the media as far as it goes, and then slide in the outer media guide until it just touches the edge of the media.

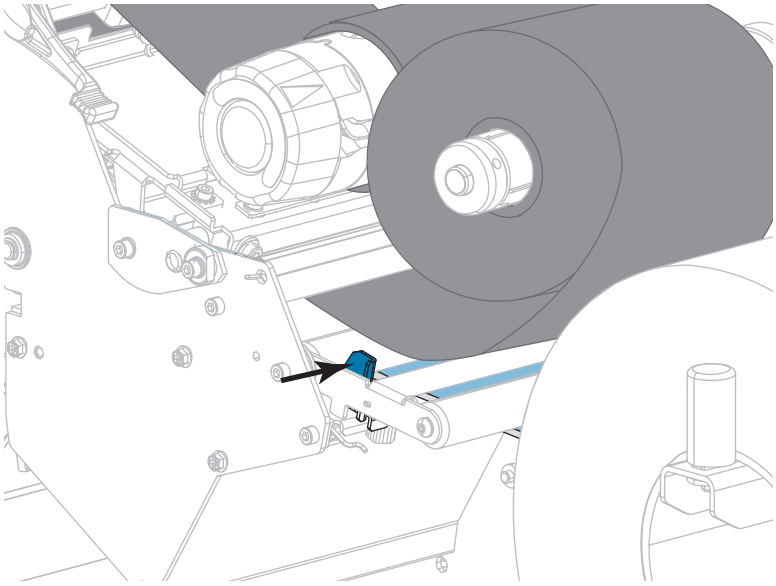

9. Tighten the thumb screw that is located on the bottom of the outer media guide.

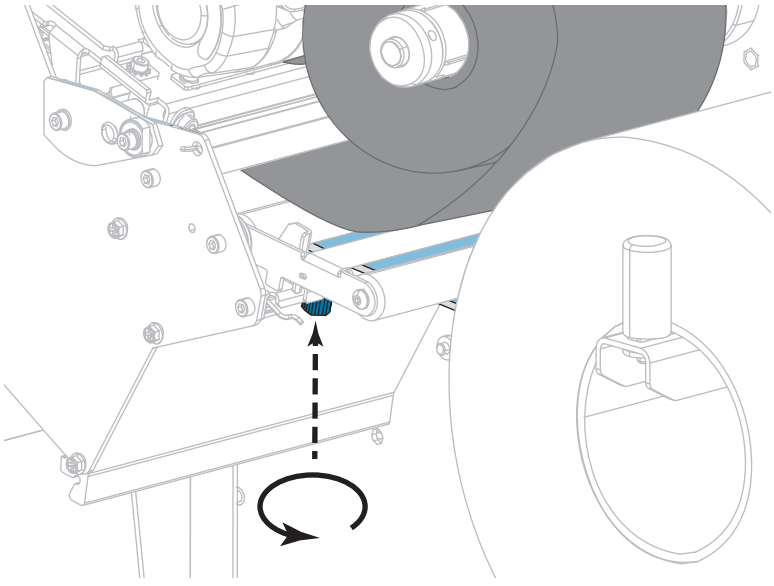

10. Rotate the printhead-open lever downward until it locks the printhead in place.

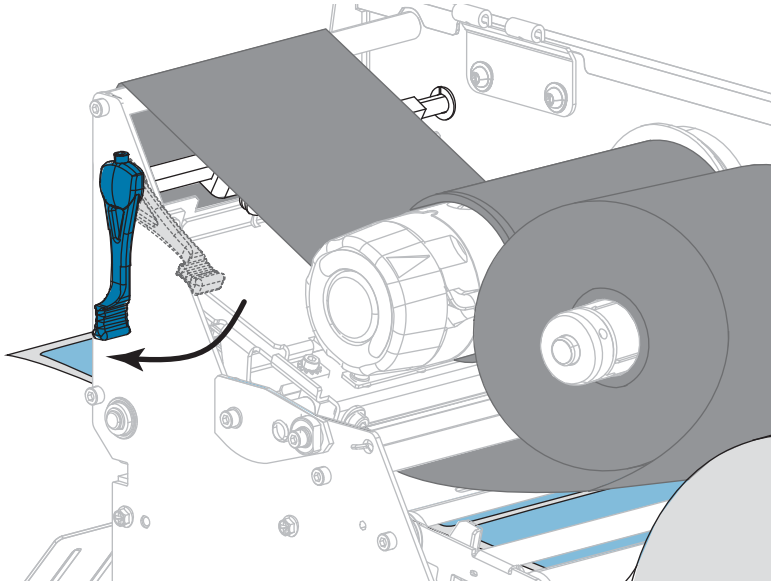

11. Close the media door.

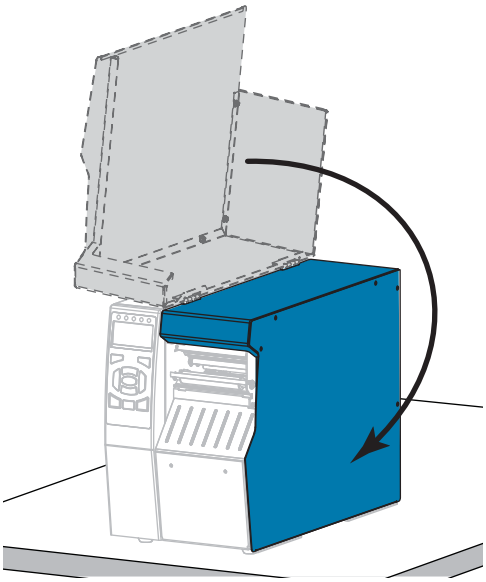

12. Set the printer to the appropriate print mode (see *PRINT MODE* on page 112).

13. Press PAUSE to exit pause mode and enable printing.

The printer may perform a label calibration or feed a label, depending on your settings.

14. For best results, calibrate the printer. See *Calibrate the Ribbon and Media Sensors* on page 177.

15. If desired, print a configuration or other label to verify that your printer is able to print. (See *PRINT INFORMATION* on page 117.)

Media loading in Tear-Off mode is complete.

Peel-Off Mode or Applicator Mode

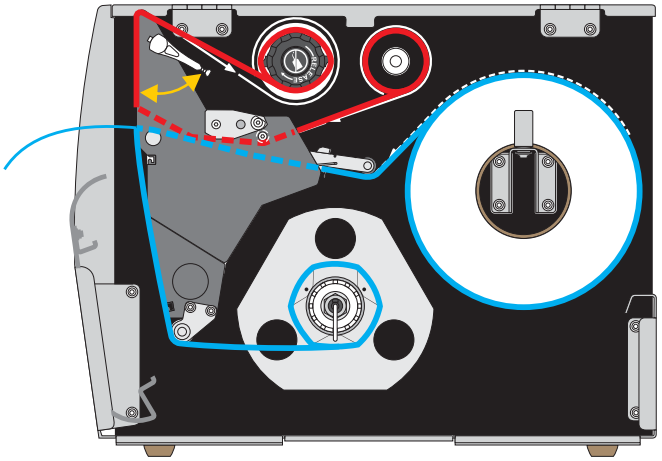

1. If you have not already done so, follow the instructions in the section *Insert the Media into the Printer* on page 30.
2. If necessary, install the rewind/liner take-up plate in the peel-off position as shown. See *Install the Rewind/Liner Take-Up Plate* on page 193 for instructions.

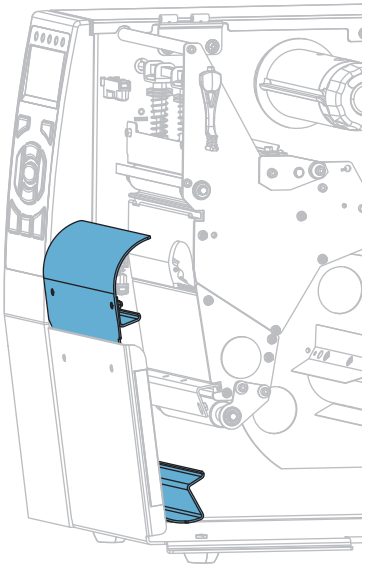

3. **Caution •** The printhead may be hot and could cause severe burns. Allow the printhead to cool.

   Open the printhead assembly by rotating the printhead-open lever upward.

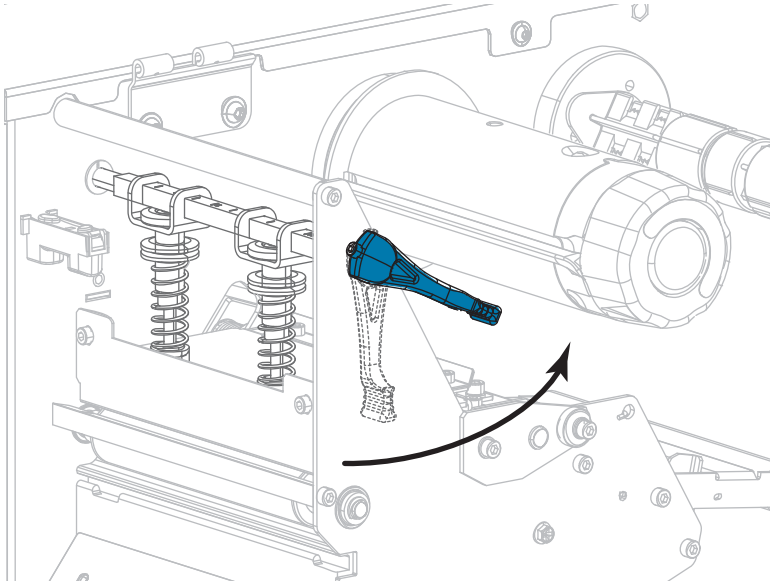

4. Loosen the thumb screw that is located on the bottom of the outer media guide.

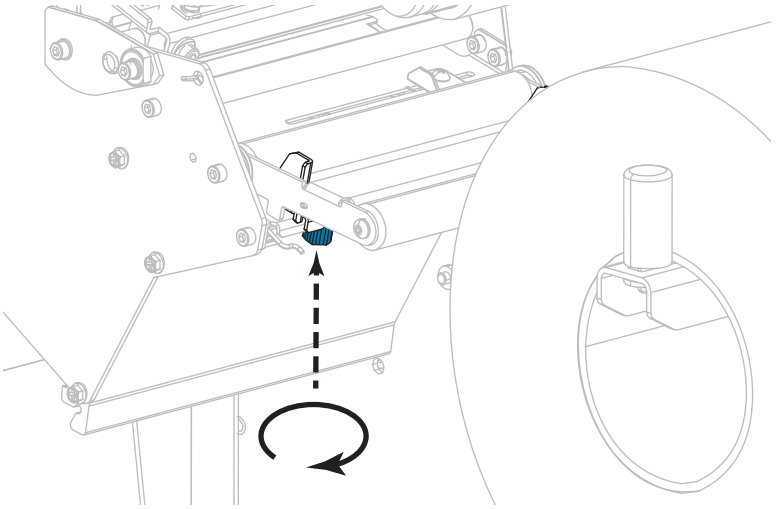

5. Slide the outer media guide all the way out.

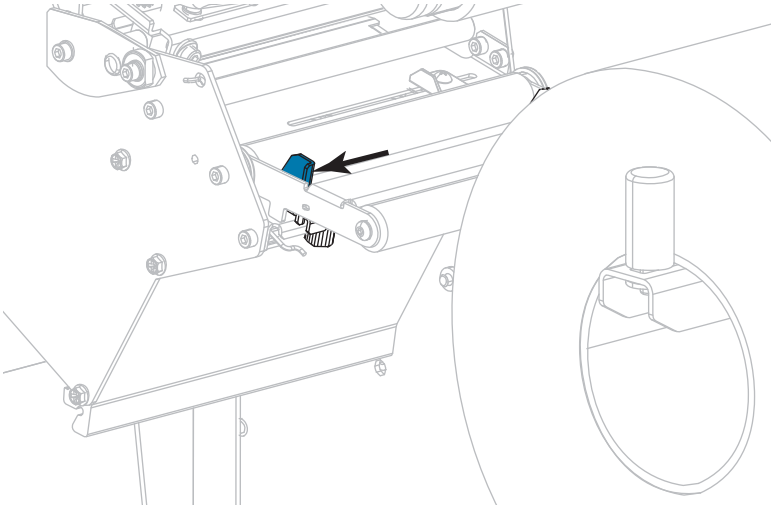

6. Thread the media under the media dancer assembly roller (**1**), the media guide roller (**2**), and then the upper media sensor (**3**).

Important • Make sure that you thread the media under these components. If you thread the media over them, the media obstructs the ribbon sensor and causes a false RIBBON OUT error.

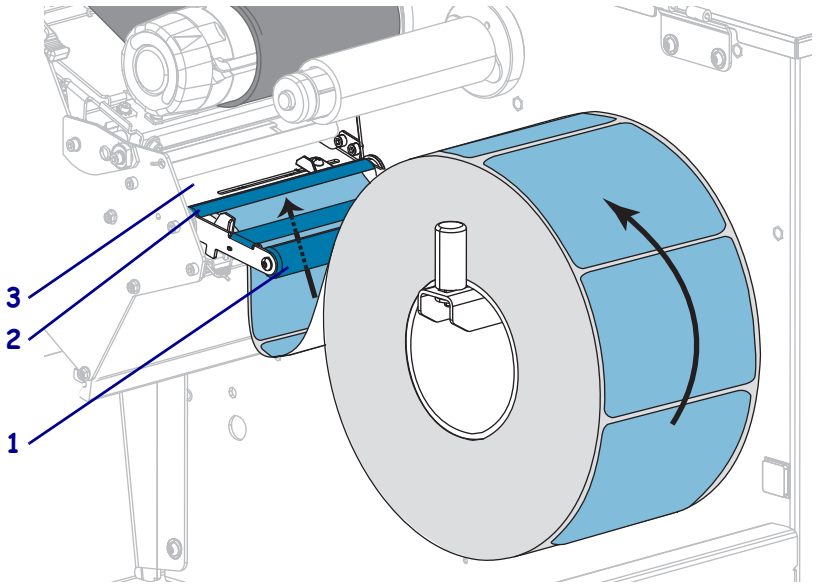

7. **Caution** • The printhead may be hot and could cause severe burns. Allow the printhead to cool.

   Push the media forward until it passes under the printhead assembly (**1**), under the snap plate (**2**), and then over the platen roller (**3**).

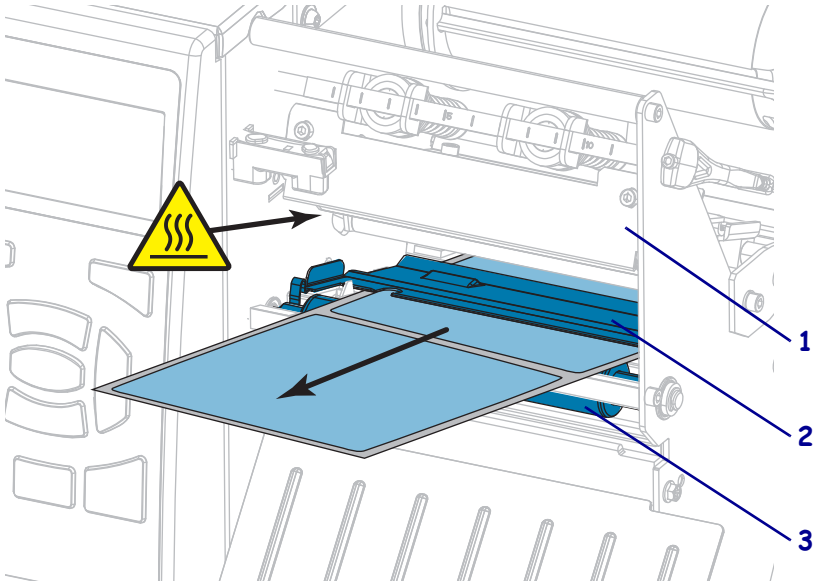

8. Extend approximately 18 in. (500 mm) of media out of the printer. Remove and discard the labels from this exposed media, leaving just the liner.

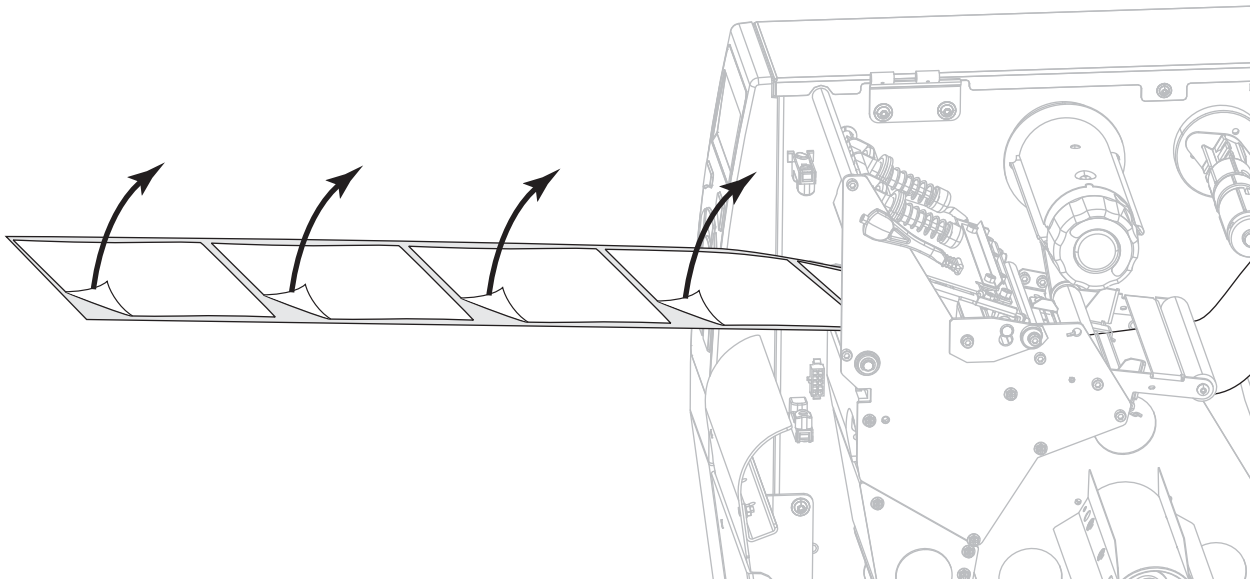

9. Feed the liner behind the rewind/liner take-up plate.

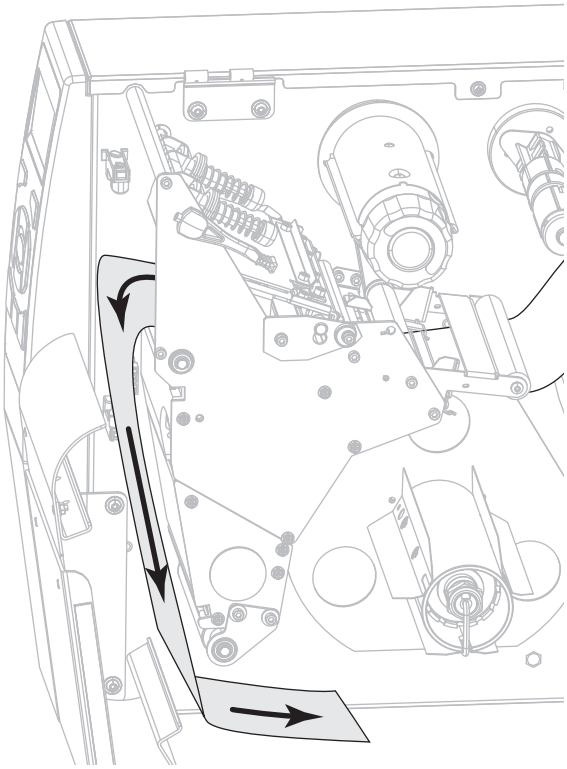

10. If desired, slide a core onto the rewind spindle until it is flush against the guide plate. A core is not necessary for liner take-up.

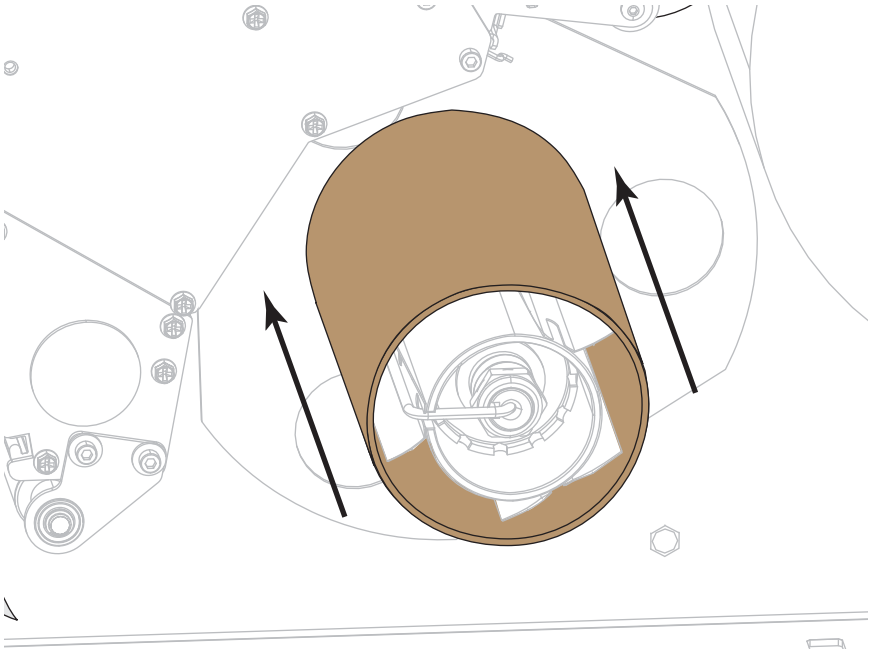

11. Remove the hook from the rewind spindle.

12. Wind the liner around the rewind spindle as shown. Rotate the rewind spindle several turns to tighten the liner and remove any slack.

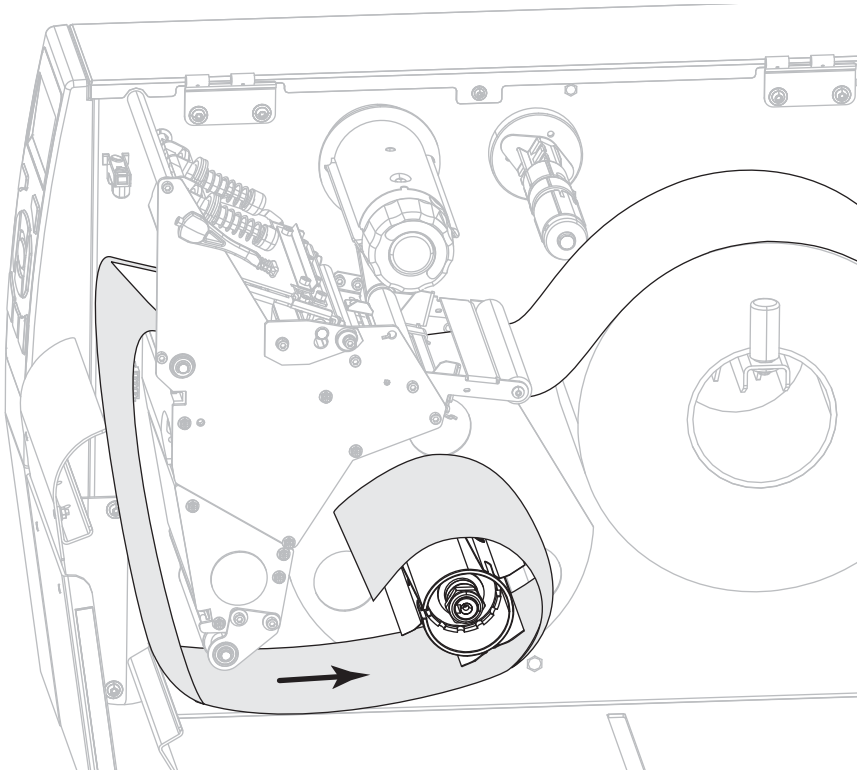

13. Reinstall the spindle hook over the liner. Insert the long end of the hook into the small hole on the guide plate (**1**). Insert the short end of the hook into the hole in the center of the adjusting nut (**2**).

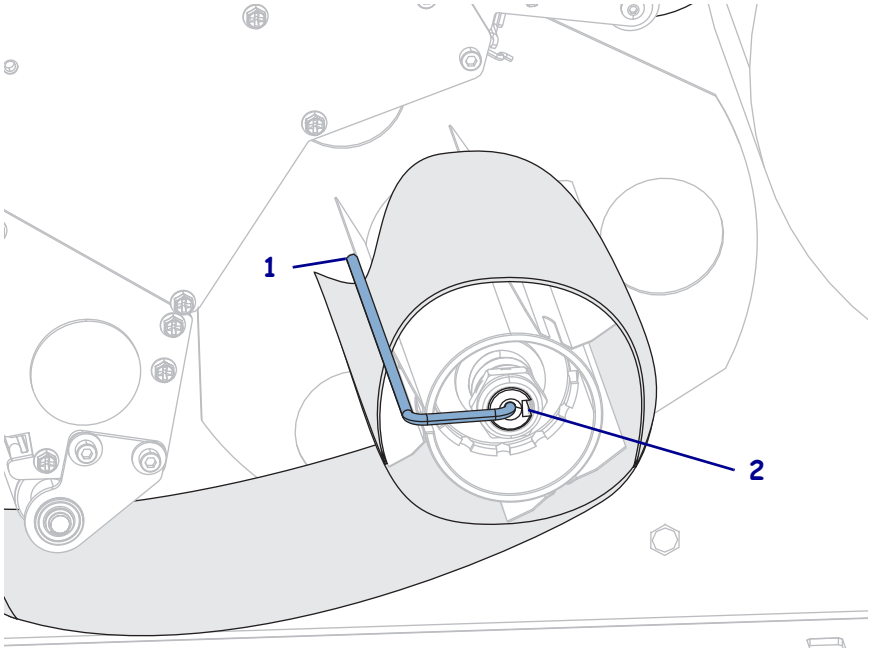

14. Does the media that you are using require ribbon for printing? If you are not sure, see *When to Use Ribbon* on page 22.

If using…	Then…
Direct Thermal media (no ribbon needed)	Continue with step 15.
Thermal Transfer media (ribbon needed)	**a.** If you have not already done so, load ribbon in the printer. See *Load the Ribbon* on page 60. **b.** Continue with step 15.

15. Push back the media as far as it goes, and then slide in the outer media guide until it just touches the edge of the media.

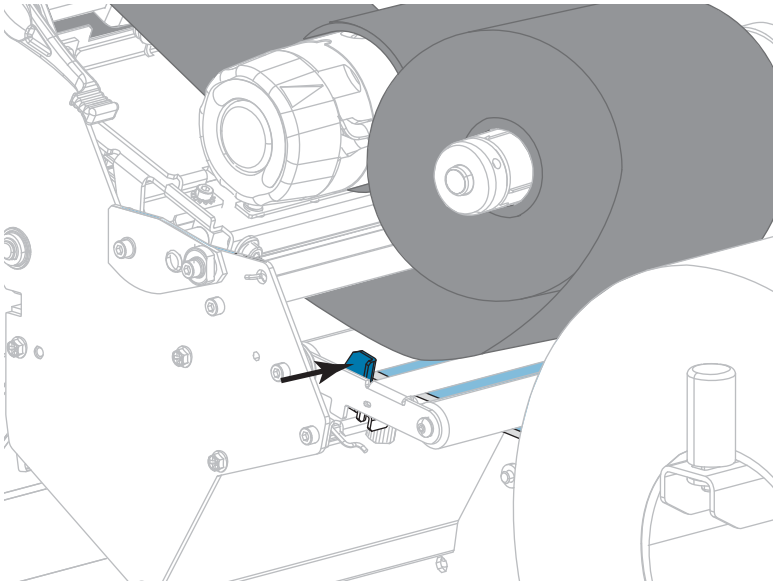

16. Tighten the thumb screw that is located on the bottom of the outer media guide.

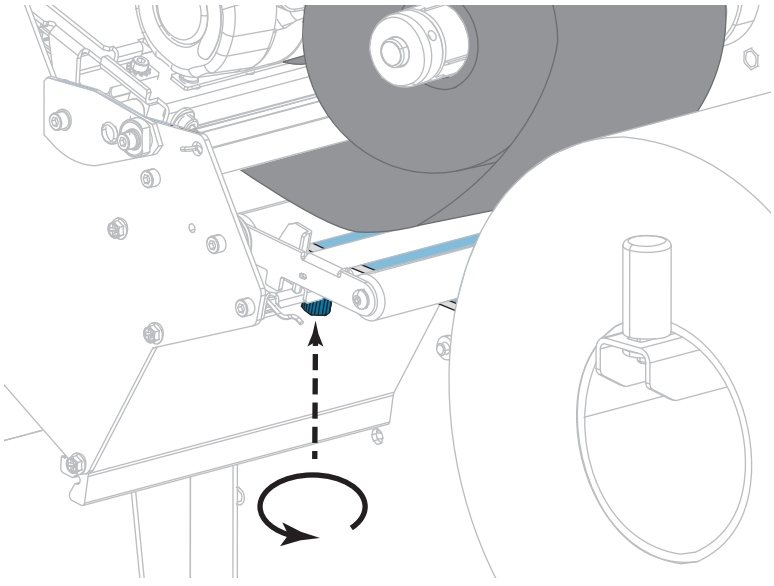

17. Rotate the printhead-open lever downward until it locks the printhead in place.

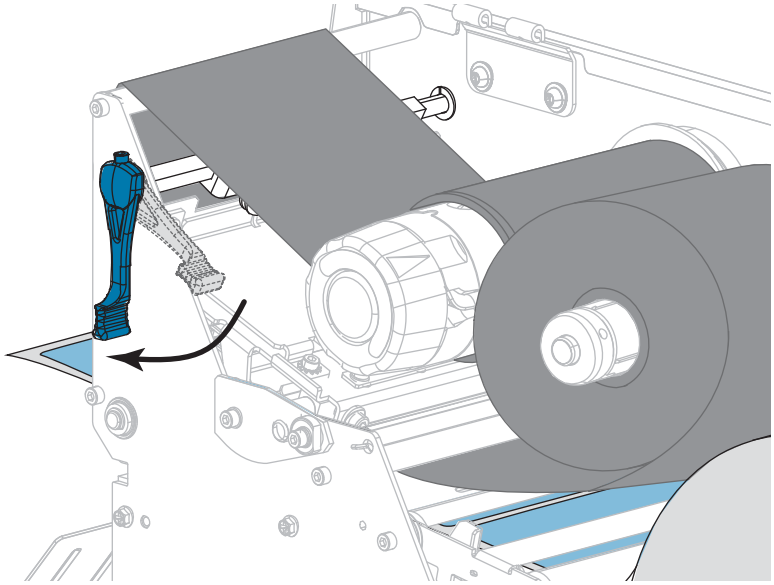

18. Close the media door.

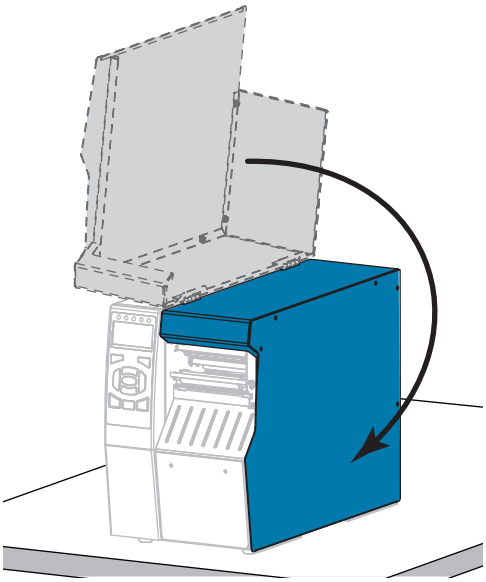

19. Set the printer to the appropriate print mode (for more information, see *PRINT MODE* on page 112).

20. Press PAUSE to exit pause mode and enable printing.

The printer may perform a label calibration or feed a label, depending on your settings.

21. For best results, calibrate the printer. See *Calibrate the Ribbon and Media Sensors* on page 177.

22. If desired, print a configuration or other label to verify that your printer is able to print. (See *PRINT INFORMATION* on page 117.)

Media loading in Peel-Off mode is complete.

Rewind Mode

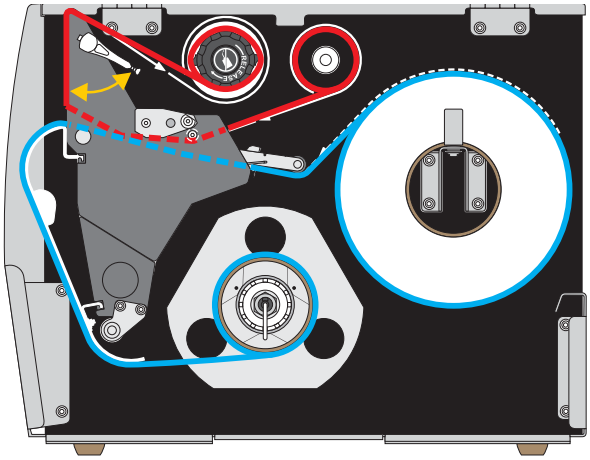

1. If you have not already done so, follow the instructions in the section *Insert the Media into the Printer* on page 30.
2. If necessary, install the rewind/liner take-up plate in the rewind position as shown. See *Install the Rewind/Liner Take-Up Plate* on page 193 for instructions.

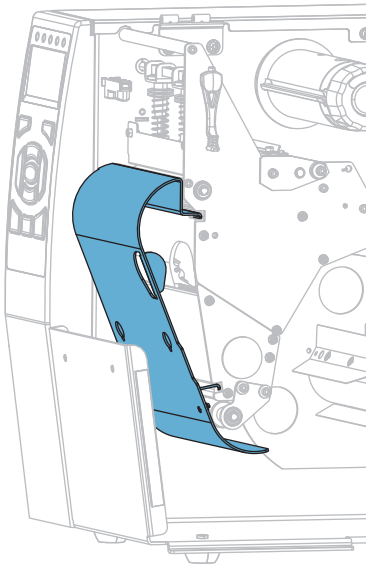

3. Slide a core onto the rewind spindle until it is flush against the guide plate.

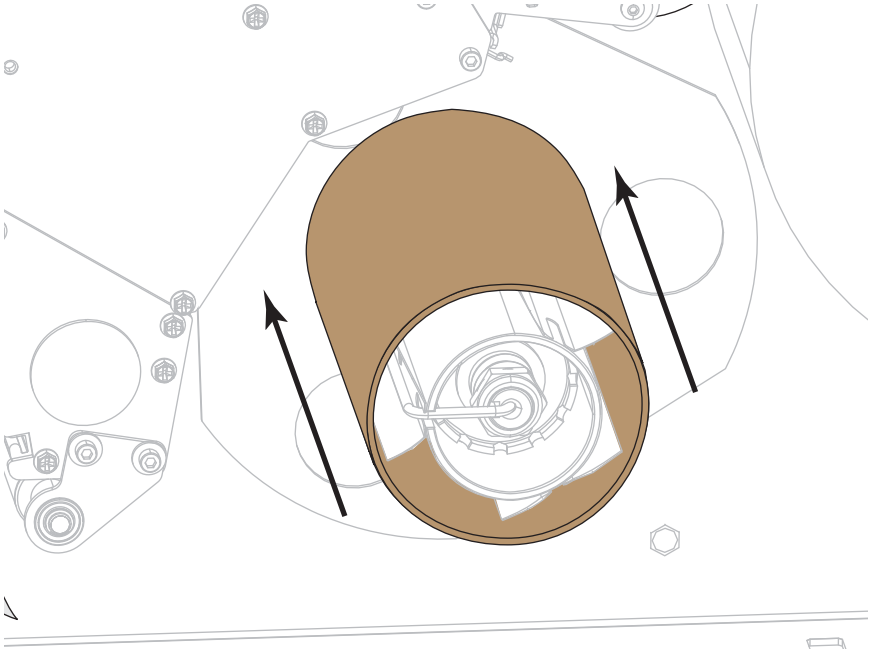

4. **Caution •** The printhead may be hot and could cause severe burns. Allow the printhead to cool.

Open the printhead assembly by rotating the printhead-open lever upward.

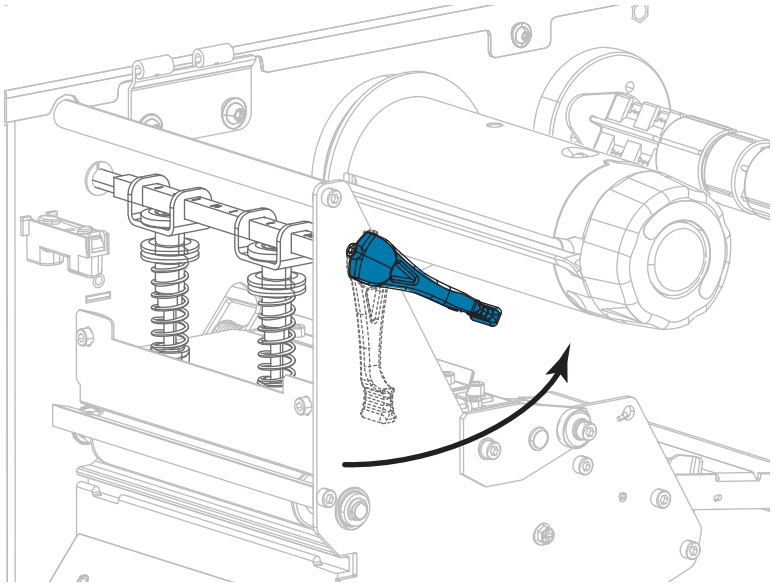

5. Loosen the thumb screw that is located on the bottom of the outer media guide (**1**).

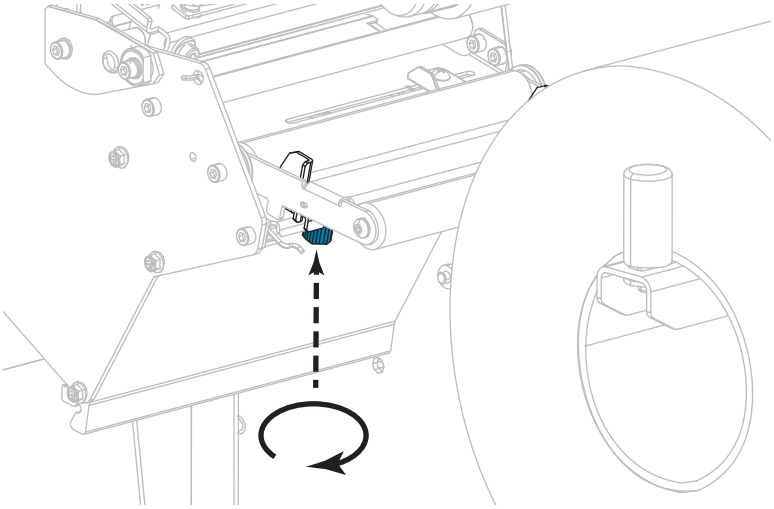

6. Slide the outer media guide all the way out.

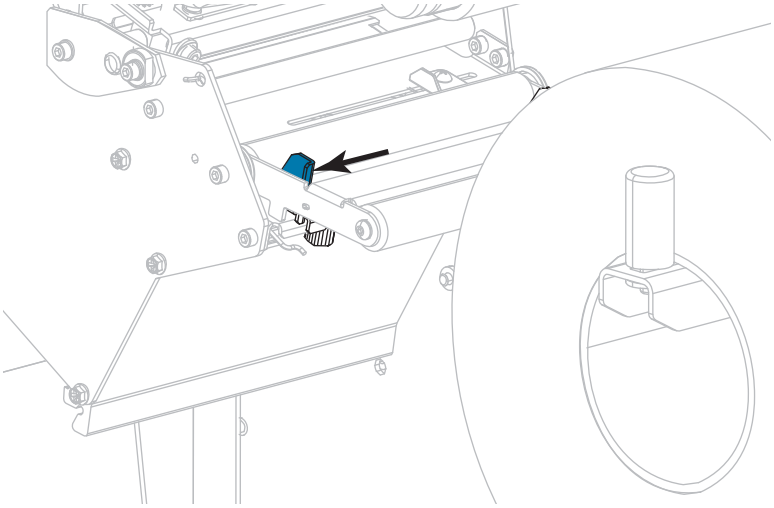

7. Thread the media under the media dancer assembly roller (**1**), the media guide roller (**2**), and then the upper media sensor (**3**).

Important • Make sure that you thread the media under these components. If you thread the media over them, the media obstructs the ribbon sensor and causes a false RIBBON OUT error.

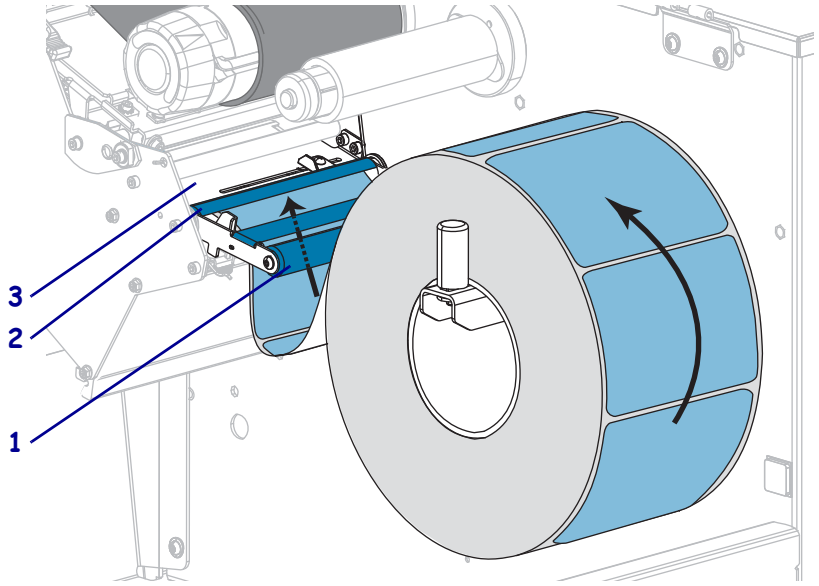

8. **Caution** • The printhead may be hot and could cause severe burns. Allow the printhead to cool.

Push the media forward until it passes under the printhead assembly (**1**), under the snap plate (**2**), and then over the platen roller (**3**).

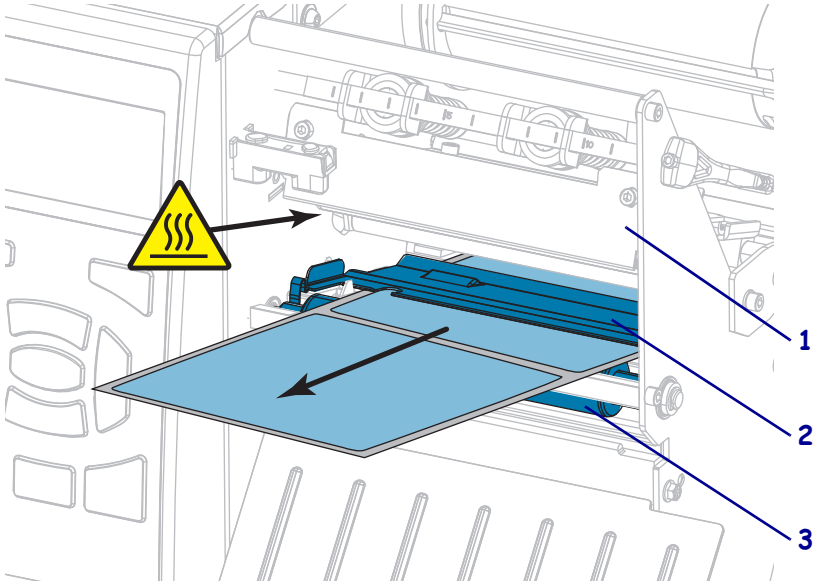

9. Extend approximately 18 in. (500 mm) of media out of the printer.

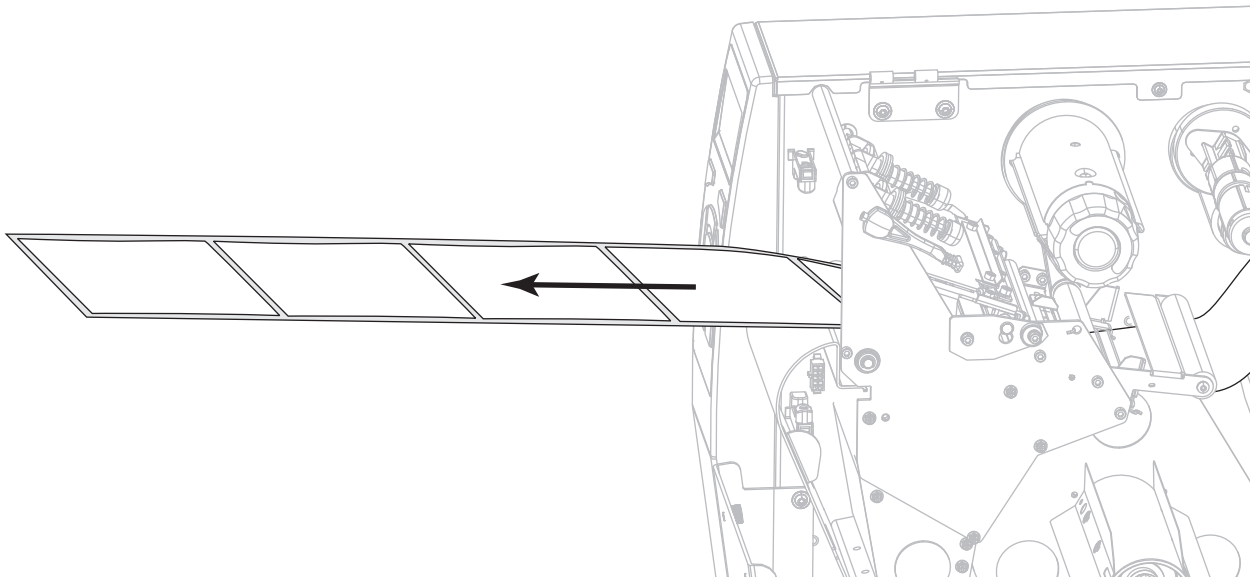

10. Feed the media over the rewind/liner take-up plate.

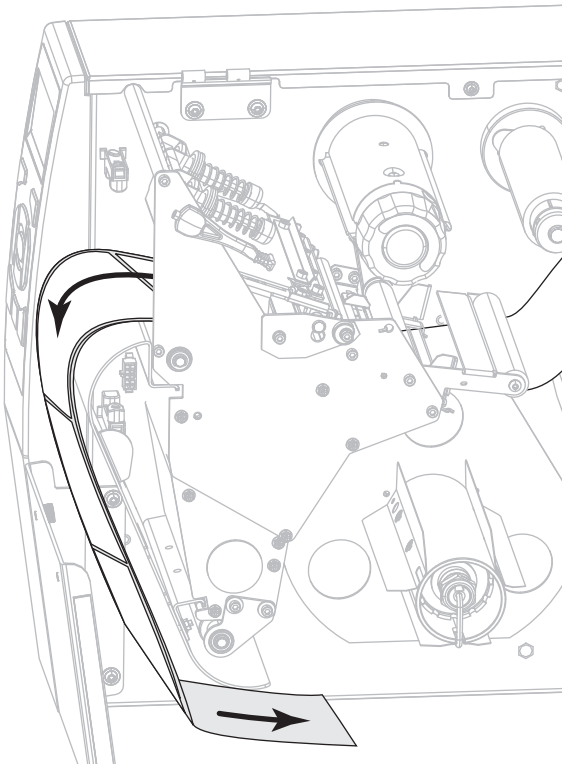

11. Wind the media around the rewind spindle as shown. Rotate the rewind spindle several turns to tighten the media and remove any slack.

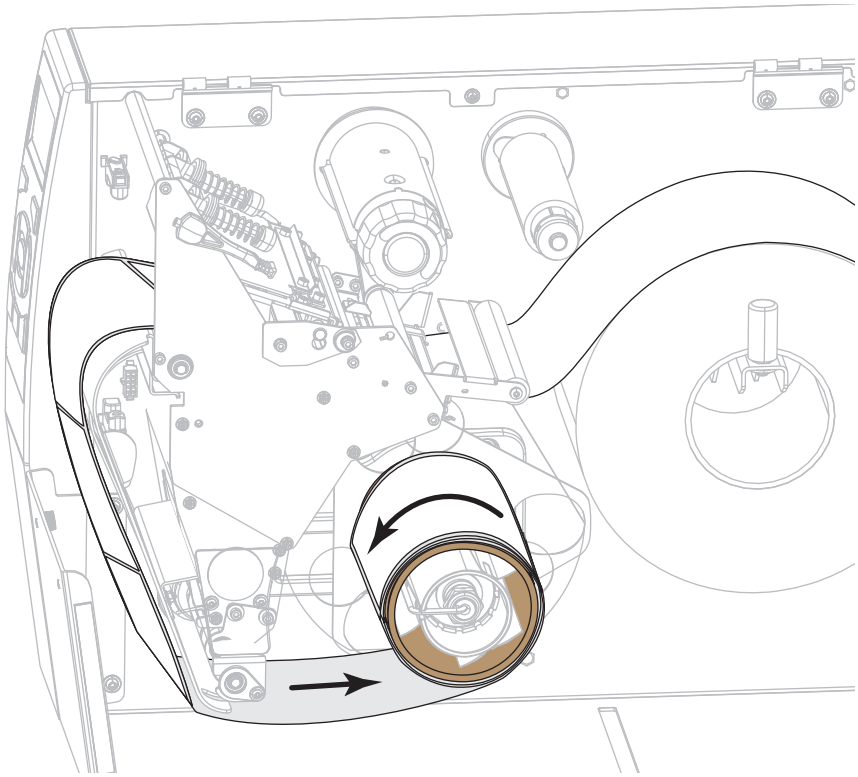

12. Does the media that you are using require ribbon for printing? If you are not sure, see *When to Use Ribbon* on page 22.

If using…	Then…
Direct Thermal media (no ribbon needed)	Continue with step 13.
Thermal Transfer media (ribbon needed)	**a.** If you have not already done so, load ribbon in the printer. See *Load the Ribbon* on page 60. **b.** Continue with step 13.

13. Push back the media as far as it goes, and then slide in the outer media guide until it just touches the edge of the media.

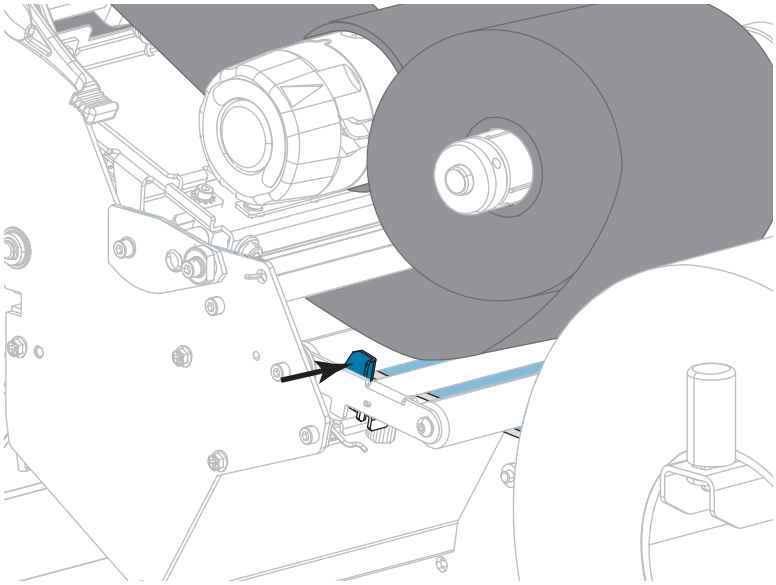

14. Tighten the thumb screw that is located on the bottom of the outer media guide.

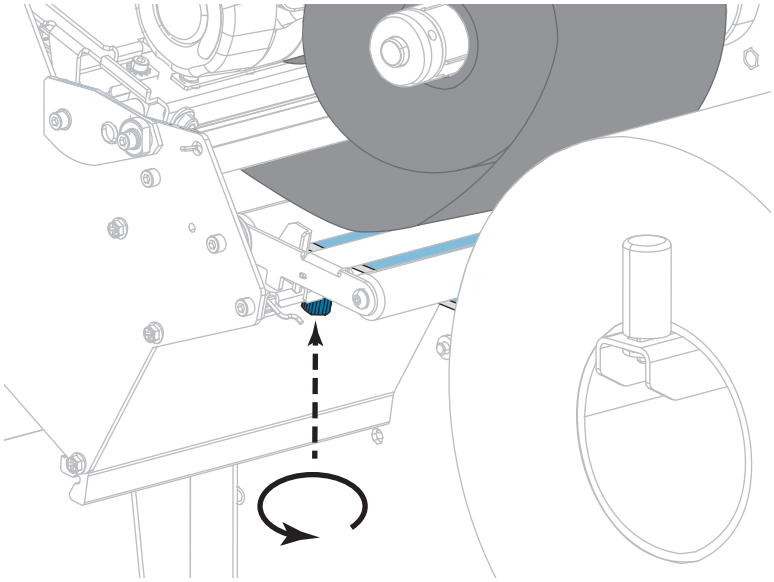

15. Rotate the printhead-open lever downward until it locks the printhead in place.

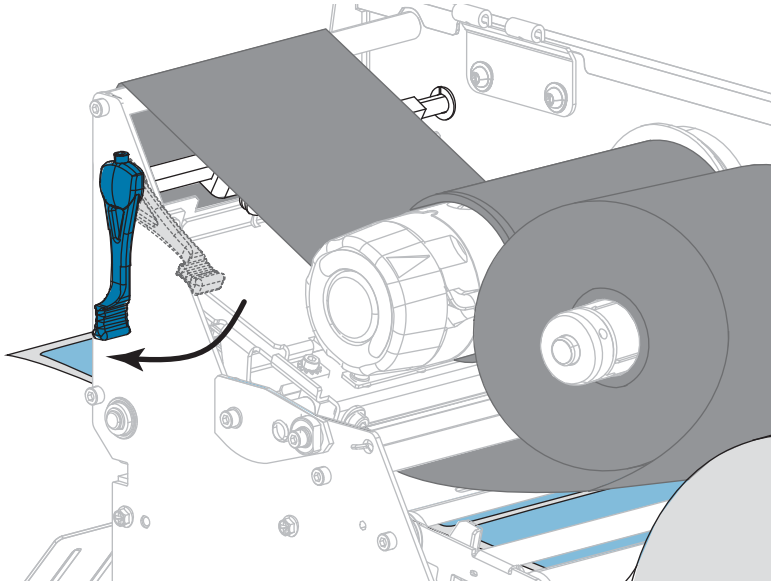

16. Close the media door.

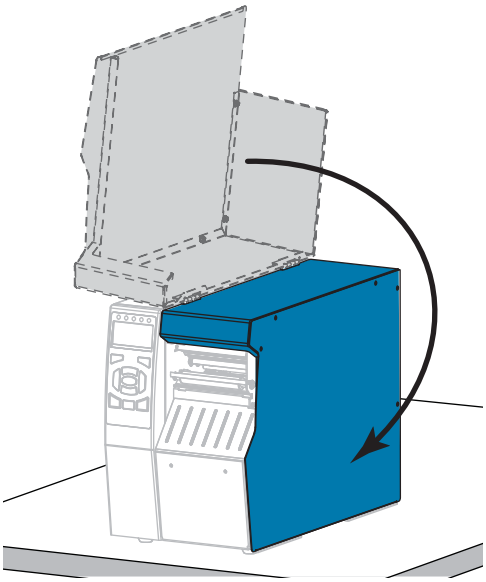

17. Set the printer to Rewind mode (for more information, see *PRINT MODE* on page 112).

18. Press PAUSE to exit pause mode and enable printing.

    The printer may perform a label calibration or feed a label, depending on your settings.

19. For best results, calibrate the printer. See *Calibrate the Ribbon and Media Sensors* on page 177.

20. If desired, print a configuration or other label to verify that your printer is able to print. (See *PRINT INFORMATION* on page 117.)

Media loading in Rewind mode is complete.

Cutter Mode or Delayed Cut Mode

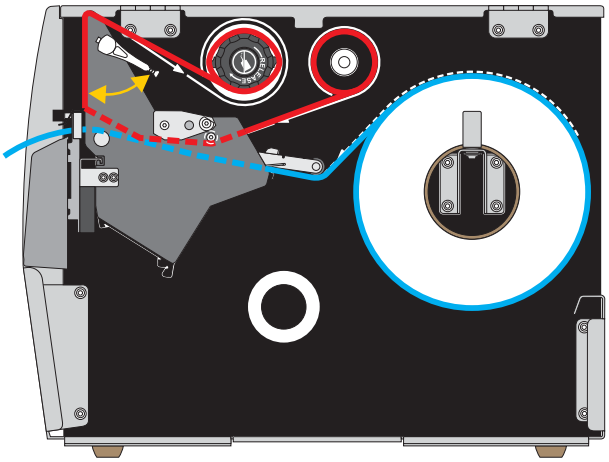

1. If you have not already done so, follow the instructions in the section *Insert the Media into the Printer* on page 30.

2. **Caution** • The printhead may be hot and could cause severe burns. Allow the printhead to cool.

   Open the printhead assembly by rotating the printhead-open lever upward.

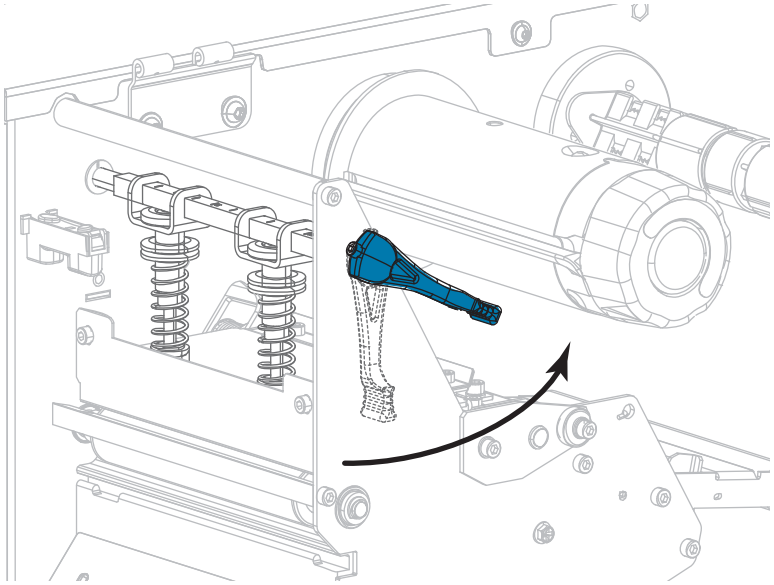

3. Loosen the thumb screw that is located on the bottom of the outer media guide (**1**).

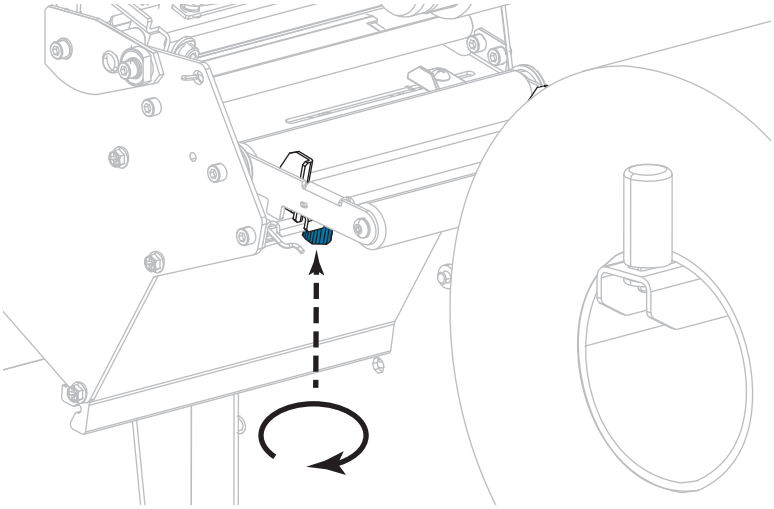

4. Slide the outer media guide all the way out.

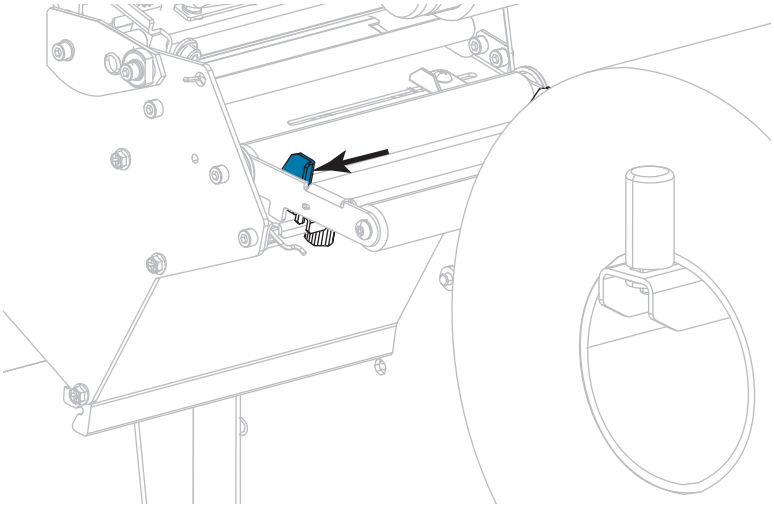

5. Thread the media under the media dancer assembly roller (**1**), the media guide roller (**2**), and then the upper media sensor (**3**).

Important • Make sure that you thread the media under these components. If you thread the media over them, the media obstructs the ribbon sensor and causes a false RIBBON OUT error.

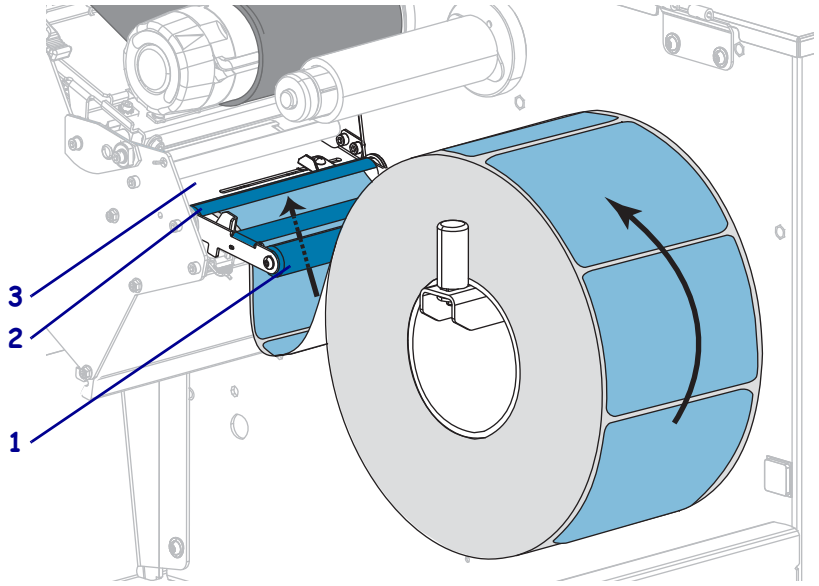

6. **Caution** • The printhead may be hot and could cause severe burns. Allow the printhead to cool.

Caution • The cutter blade is sharp. Do not touch or rub the blade with your fingers.

Push the media forward until it passes under the printhead assembly (**1**), under the snap plate (**2**), and then through the cutter assembly (**3**).

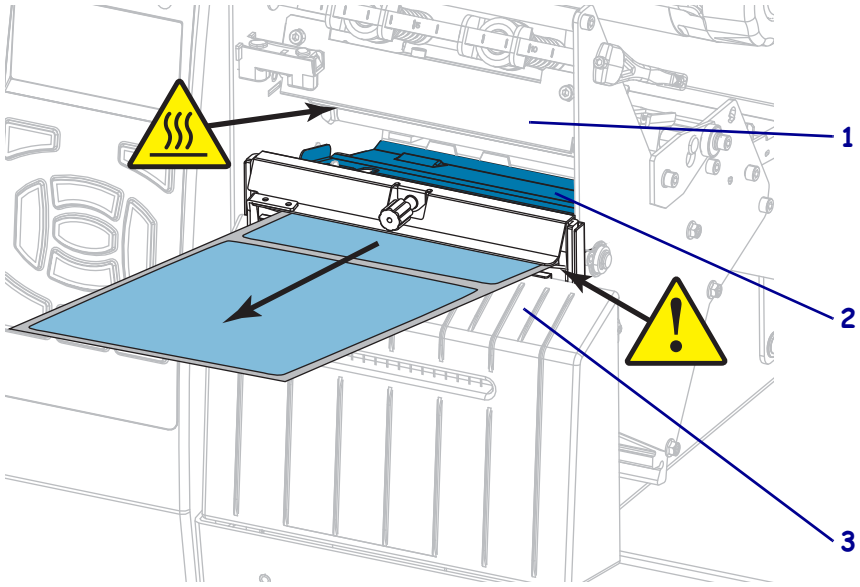

7. Does the media that you are using require ribbon for printing? If you are not sure, see *When to Use Ribbon* on page 22.

If using…	Then…
Direct Thermal media (no ribbon needed)	Continue with step 8.
Thermal Transfer media (ribbon needed)	**a.** If you have not already done so, load ribbon in the printer. See *Load the Ribbon* on page 60. **b.** Continue with step 8.

8. Push back the media as far as it goes, and then slide in the outer media guide until it just touches the edge of the media.

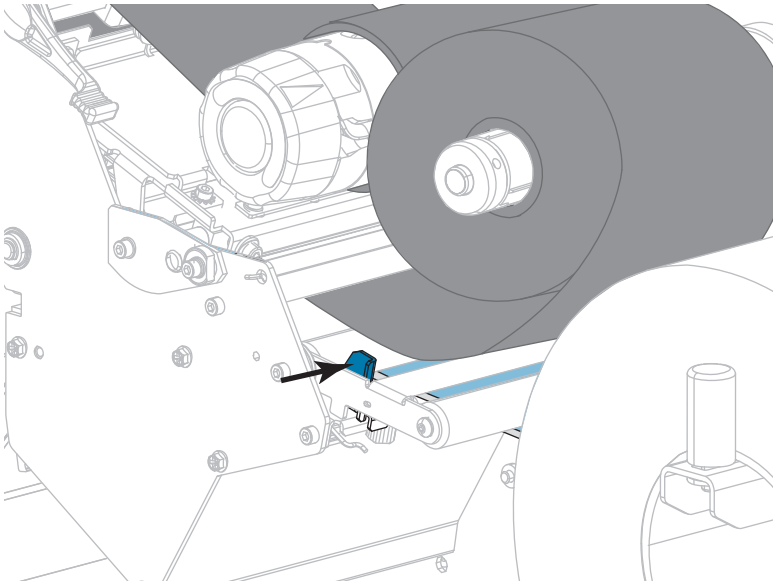

9. Tighten the thumb screw that is located on the bottom of the outer media guide.

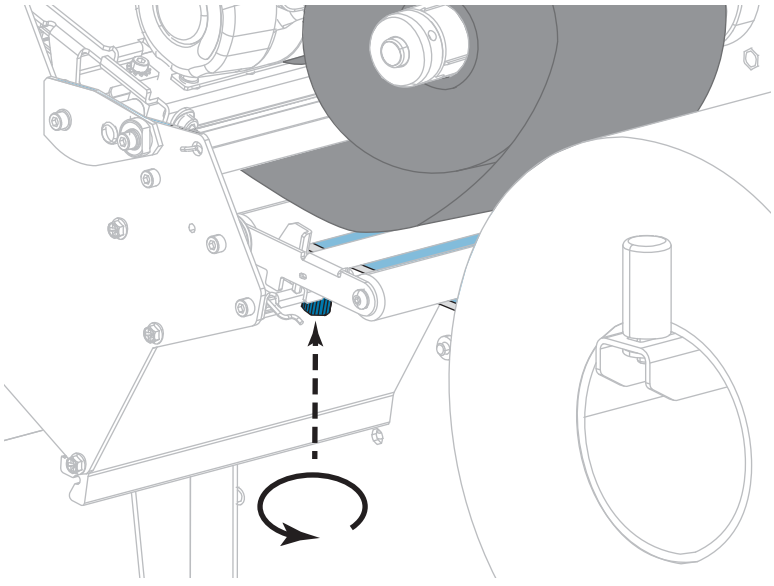

10. Rotate the printhead-open lever downward until it locks the printhead in place.

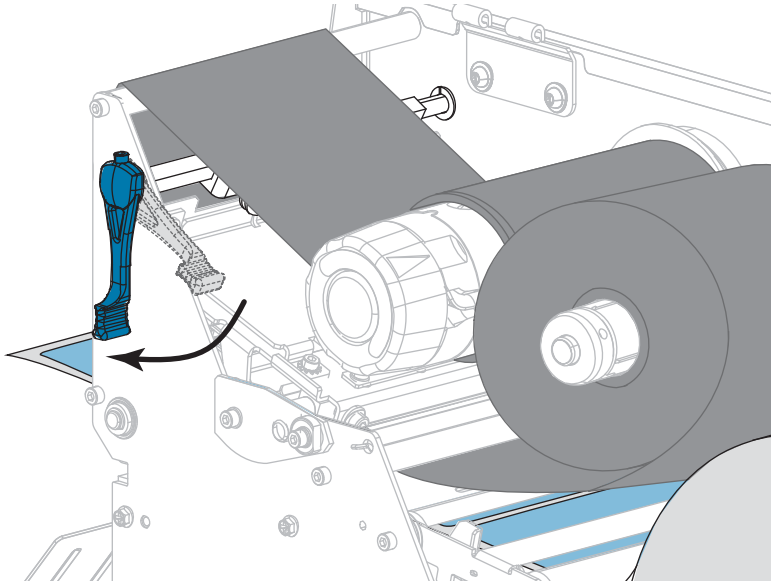

11. Close the media door.

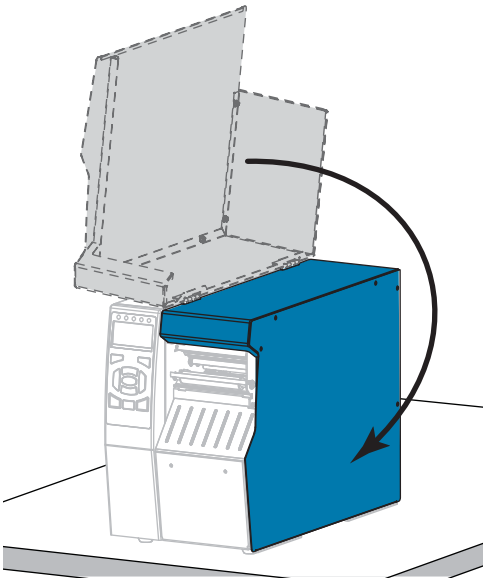

12. Set the printer to the appropriate print mode (for more information, see *PRINT MODE* on page 112).

13. Press PAUSE to exit pause mode and enable printing.

The printer may perform a label calibration or feed a label, depending on your settings.

14. For best results, calibrate the printer. See *Calibrate the Ribbon and Media Sensors* on page 177.

15. If desired, print a configuration or other label to verify that your printer is able to print. (See *PRINT INFORMATION* on page 117.)

Media loading in Cutter mode is complete.

Load the Ribbon

Note • This section applies only to printers that have the Thermal Transfer option installed.

Ribbon is used only with thermal transfer labels. For direct thermal labels, do not load ribbon in the printer. To determine if ribbon must be used with a particular media, see *When to Use Ribbon* on page 22.

Caution • While performing any tasks near an open printhead, remove all rings, watches, hanging necklaces, identification badges, or other metallic objects that could touch the printhead. You are not required to turn off the printer power when working near an open printhead, but Zebra recommends it as a precaution. If you turn off the power, you will lose all temporary settings, such as label formats, and you must reload them before you resume printing.

Important • Use ribbon that is wider than the media to protect the printhead from wear. Ribbon must be coated on the outside.

To load ribbon, complete these steps:

1. Raise the media door.

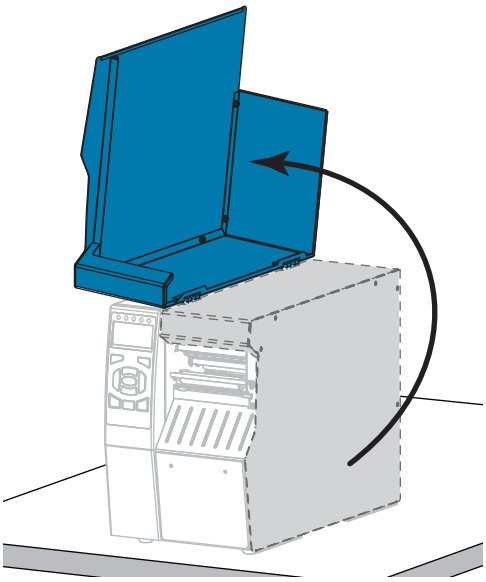

2. **Caution •** The printhead may be hot and could cause severe burns. Allow the printhead to cool.

   Open the printhead assembly by rotating the printhead-open lever upward.

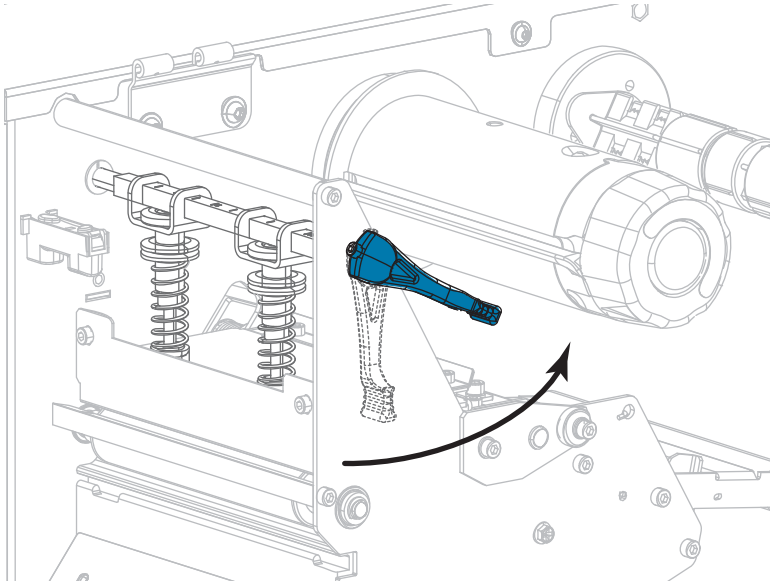

3. Align the segments of the ribbon supply spindle.

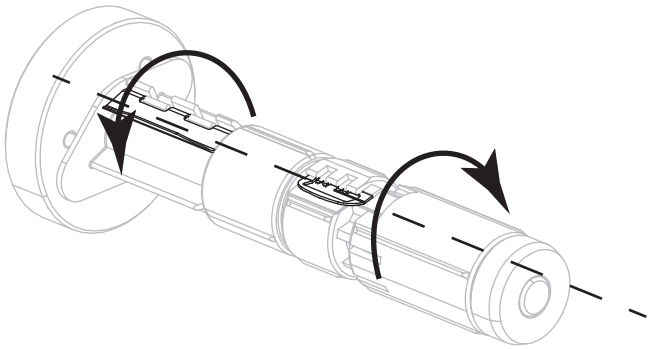

4. Place the roll of ribbon on the ribbon supply spindle with the loose end of the ribbon unrolling as shown. Push the roll back as far as it will go.

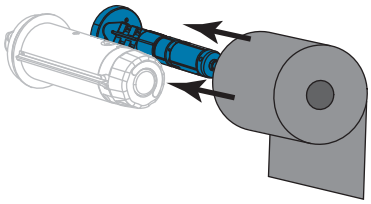

5. A ribbon leader makes ribbon loading and unloading easier. Does your roll of ribbon have paper or something else attached to the end to serve as a ribbon leader?

If…	Then…
Yes	Continue with the next step.
No	**a.** Cut or tear about 4–6 in. (100–150 mm) of media from the roll. 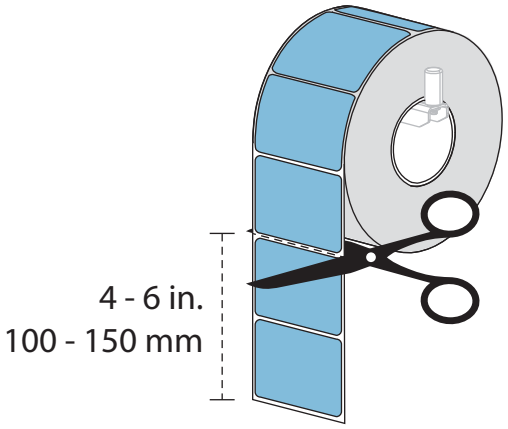 **b.** Peel a label from the media strip. 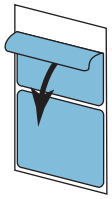 **c.** Use this label to attach the end of the ribbon to the media strip. The media strip acts as a ribbon leader. 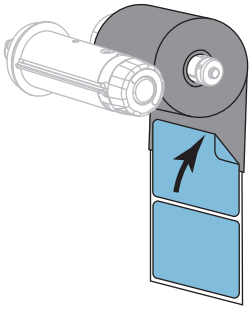

6. Thread the ribbon leader under the ribbon guide roller (**1**) and the printhead assembly (**2**).

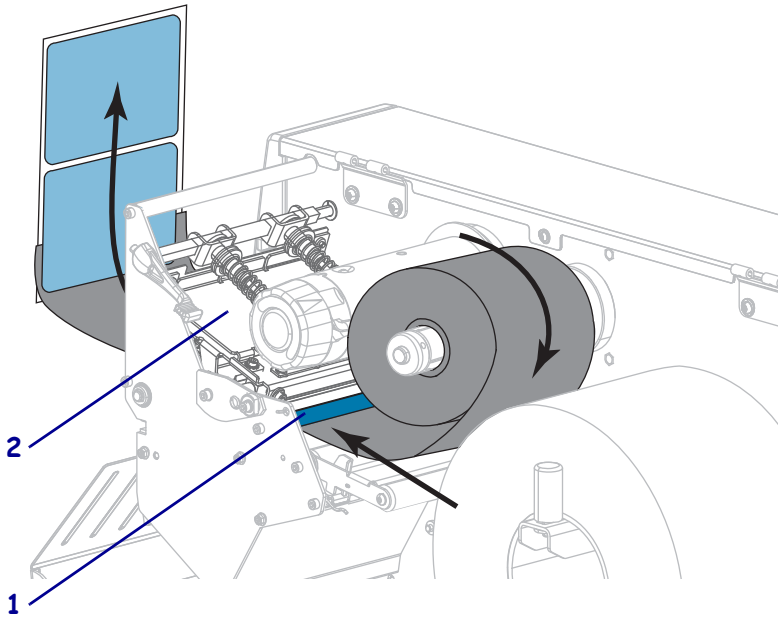

7. Bring the ribbon leader over the upper ribbon roller (**1**) and then under the ribbon take-up spindle (**2**). Wrap the leader and the ribbon around the ribbon take-up spindle as shown. Rotate the spindle several turns to wind the ribbon and remove any slack.

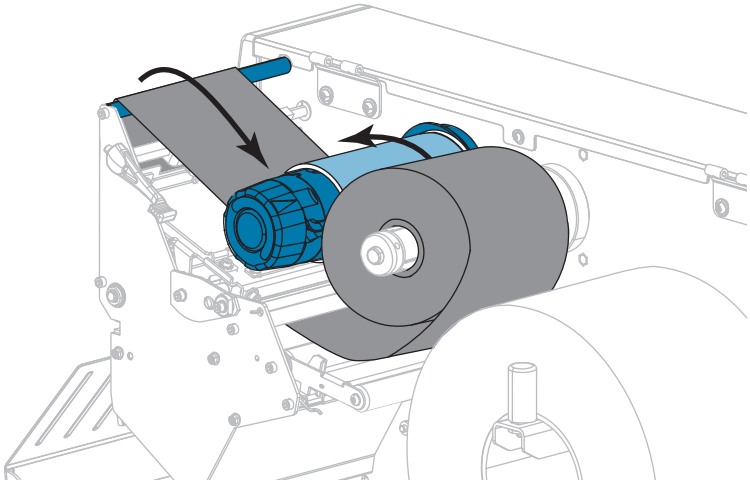

8. Is media already loaded in the printer?

If...	Then...
No	Continue with *Load the Media* on page 30 to load media in the printer.
Yes	**a.** Rotate the printhead-open lever downward until it locks the printhead in place. 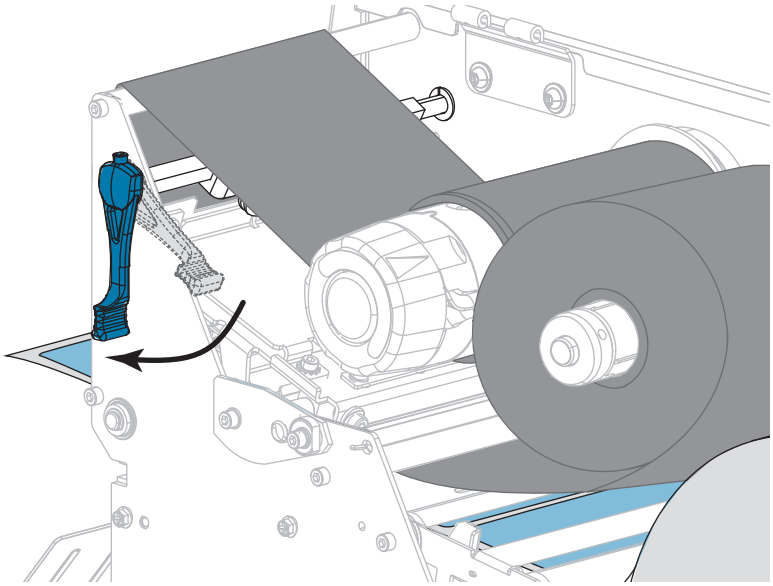 **b.** Close the media door. 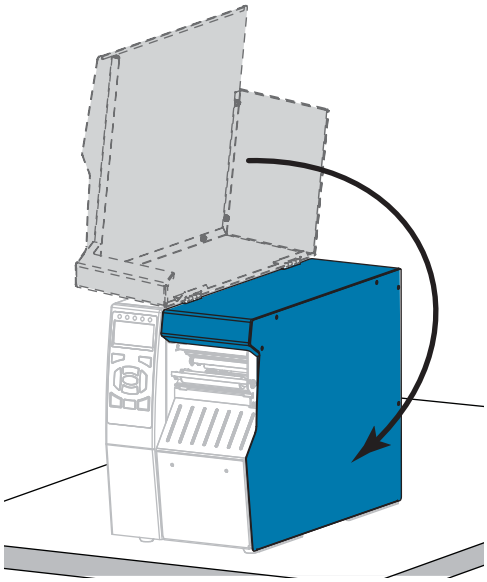 **c.** If necessary, press PAUSE to enable printing.

Install the Printer Driver and Connect the Printer to the Computer

In this section, you are shown how to use the Zebra Setup Utilities program to prepare a computer running Microsoft Windows® for the printer driver before connecting the printer to any of the computer's data communication interfaces. Use this section for directions to install this program if you have not already done so. You may connect your printer to your computer using any of the connections that you have available.

Important • You must use the Zebra Setup Utilities program or the Zebra Printer Setup Utility app for Android devices (available for free from Google Play™ at https://play.google.com/store/apps/details?id=com.zebra.printersetup) before connecting the printer to your computer. Your computer will not install the correct printer drivers if you connect the printer to it without the Zebra Setup Utilities program or the Zebra Printer Setup Utility app.

Install Zebra Setup Utilities

Follow the directions in this section if you do not have Zebra Setup Utilities installed on your computer or if you want to update an existing version of the program. You do not need to uninstall any older versions or any Zebra printer drivers to do so.

To install the Zebra Setup Utilities program, complete these steps:

Download the Zebra Setup Utilities Installer

1. Go to http://www.zebra.com/setup.

   The Zebra Setup Utilities page displays.

2. On the DOWNLOADS tab, click Download under the ZEBRA SETUP UTILITIES option.

   You are prompted to read and accept the End User License Agreement (EULA).

3. If you agree with the terms of the EULA, click

   ACCEPT AND BEGIN DOWNLOAD NOW

   Depending on your browser, you are given options to run or save the executable file.

Run the Zebra Setup Utilities Installer

4. Save the program to your computer. (Optional if your browser gave you the option to run the program instead of saving it.)

5. Run the executable file. If your computer prompts you for permission to run the file, click the appropriate button to allow it to run.

   What the computer displays next depends on whether Zebra Setup Utilities was already installed. Follow the instructions based on what your computer prompts you to do.

If your computer...	Then...
Did not previously have the Zebra Setup Utilities installed	**a.** The Zebra Setup Utilities - InstallAware Wizard displays the following. 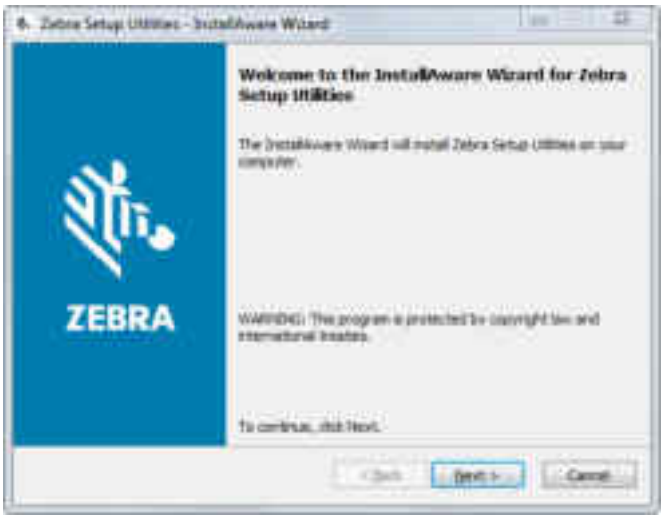 **b.** Go to *New Installations of Zebra Setup Utilities* on page 67.

If your computer...	Then...
Did previously have the Zebra Setup Utilities installed	**a.** The Zebra Setup Utilities - InstallAware Wizard displays the following. 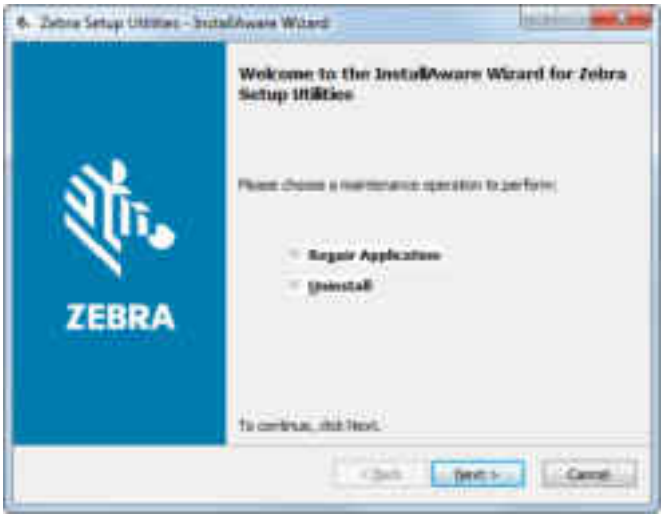 **b.** Go to *Updating Existing Installations of Zebra Setup Utilities* on page 69.

New Installations of Zebra Setup Utilities

6. Click Next.

   You are prompted again to read and accept the End User License Agreement (EULA).

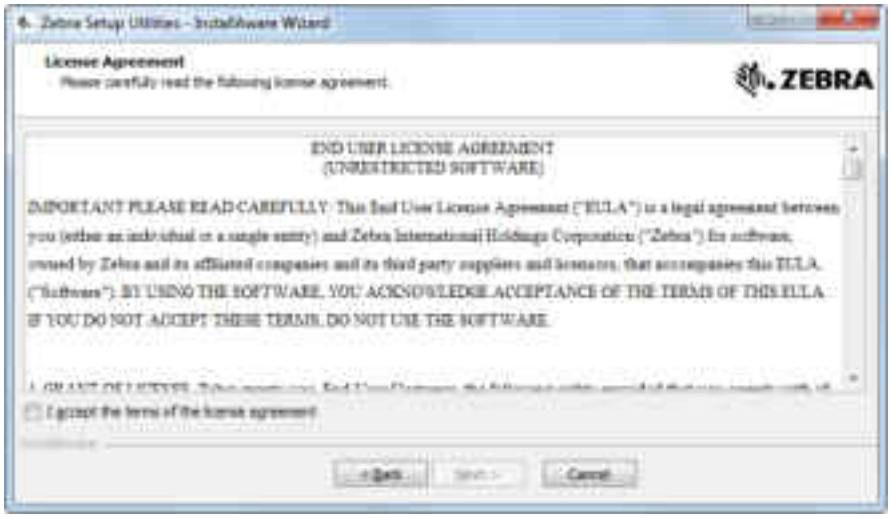

7. If you agree with the terms of the EULA, check the box that says

   I accept the terms of the license agreement

8. Click Next.

   You are prompted to select where the files will be installed.

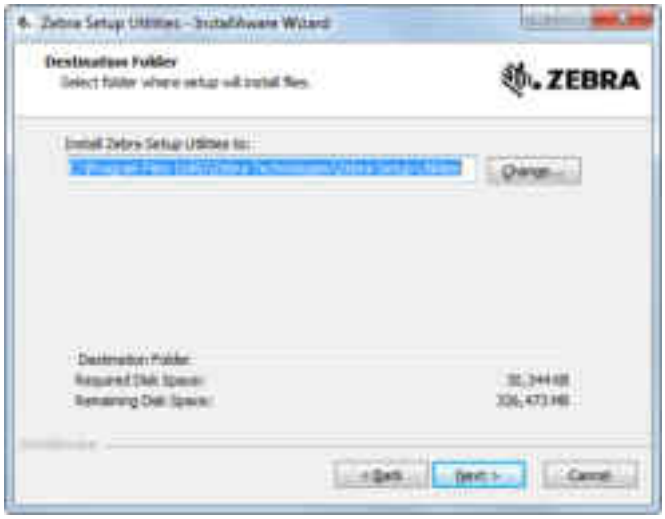

9. Change the destination folder, if necessary, and then click Next.

   You are prompted to select a location for program shortcuts.

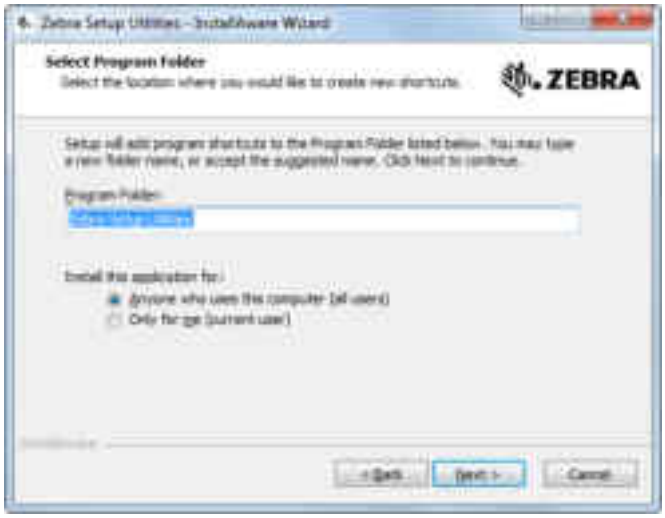

10. Change the location, if desired, and then click Next.

You are prompted to complete the InstallAware wizard.

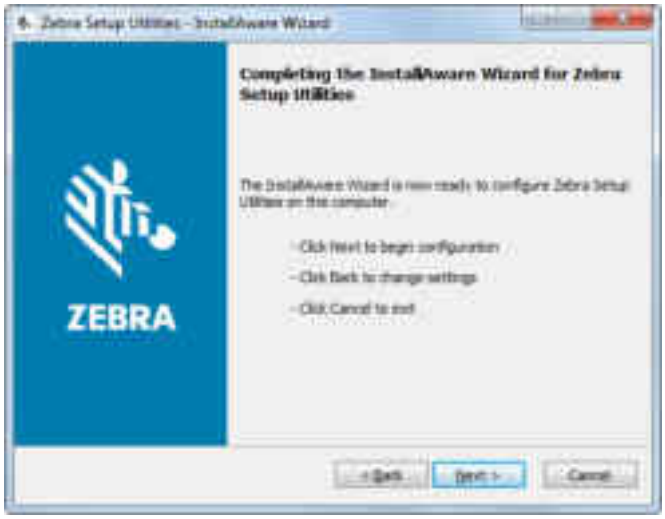

11. Skip to *Continuing with New or Updated Installations* on page 70.

Updating Existing Installations of Zebra Setup Utilities

12. Click Next.

You are prompted to choose the features that you would like to install.

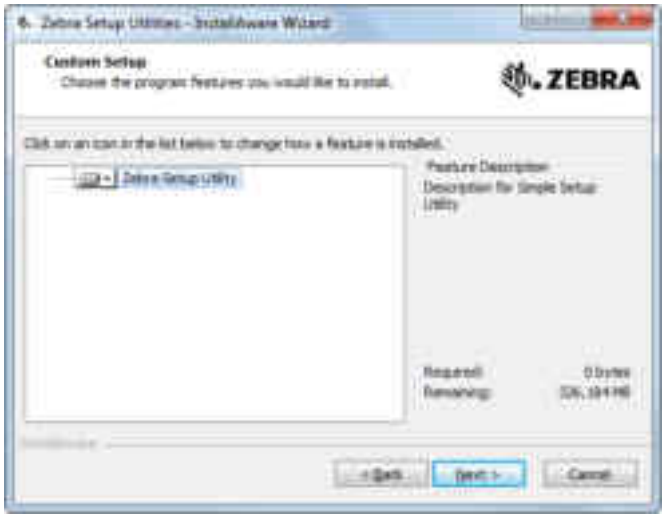

13. Click Next.

    You are prompted to complete the InstallAware wizard.

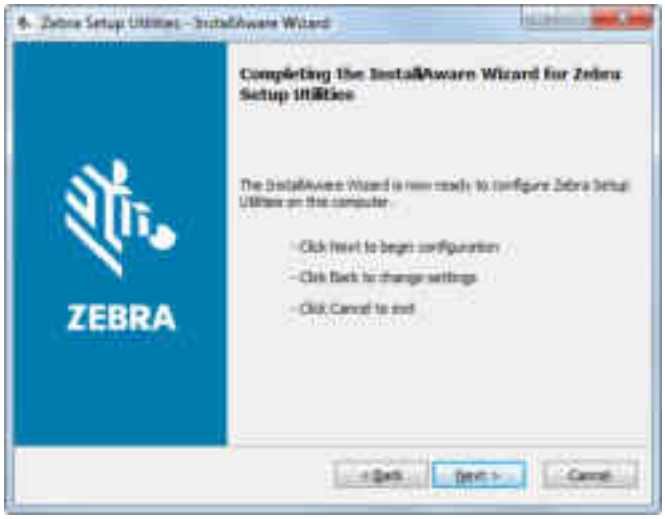

Continuing with New or Updated Installations

14. Click Next.

    Installation begins.

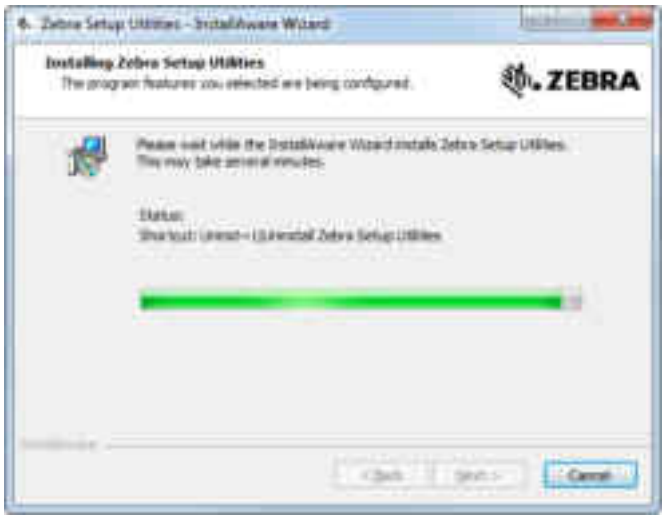

During installation, you are presented with information about drivers.

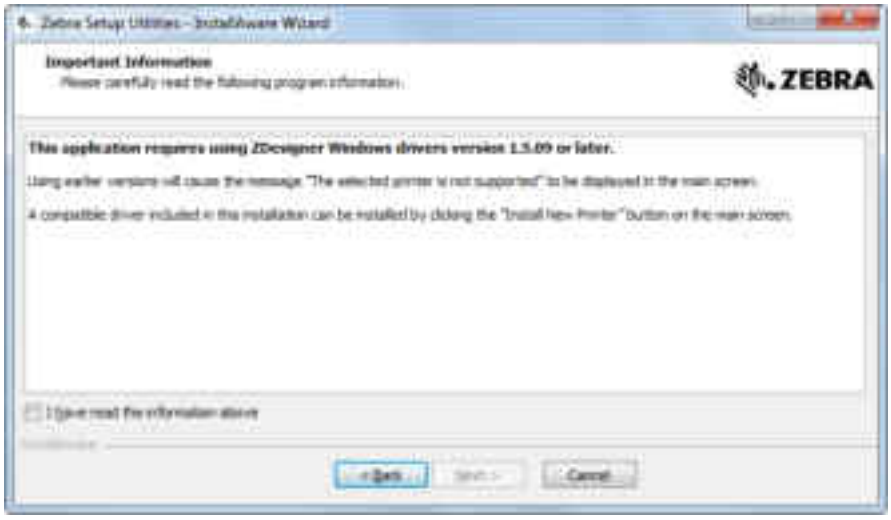

15. Read the information, and then check the box that says "I have read the information above".

16. Click Next.

    You are shown options that can take place when the wizard exits the installation.

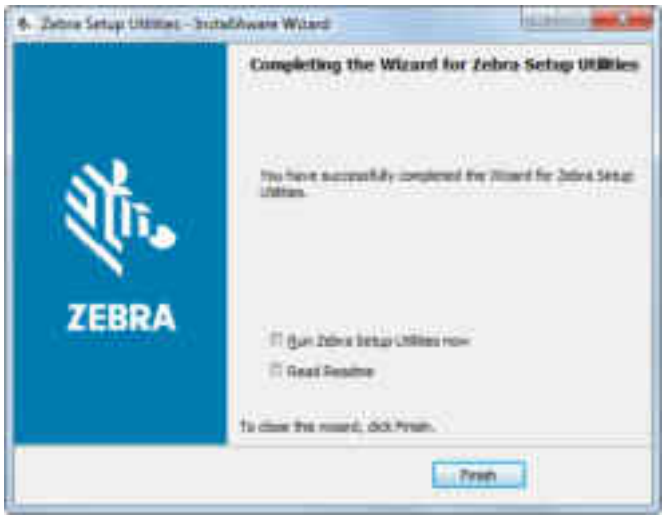

17. Check the box that says "Run Zebra Setup Utilities now."

18. Click Finish.

    What the computer displays next depends on whether any Zebra printer drivers are already installed on your computer. Follow the instructions based on what your computer displays.

<table>
<tr><th>If your computer...</th><th colspan="2">Then...</th></tr>
<tr><td rowspan="3">Did not previously have any Zebra printer drivers installed</td><td colspan="2">The System Prepare Wizard displays.
 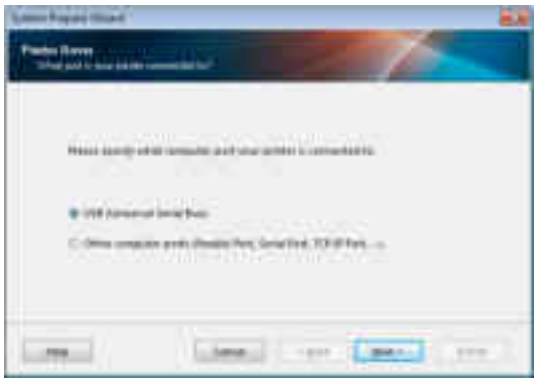 </td></tr>
<tr><th>To connect by...</th><th>Then...</th></tr>
<tr><td>USB port</td><td>Continue with Connect a Computer to the Printer's USB Port on page 74.</td></tr>
<tr><td>Serial or optional parallel port</td><td>Continue with Connect a Computer to the Printer's Serial or Parallel Port on page 78.</td></tr>
</table>

<table>
<tr><th>If your computer...</th><th>Then...</th></tr>
<tr><td>Did previously have any Zebra printer drivers installed</td><td>The Zebra Setup Utilities screen displays.

<table><tr><th>To connect by the...</th><th>Then...</th></tr><tr><td>USB port</td><td>Continue with Connecting the printer to a USB port on your computer on page 75.</td></tr><tr><td>Serial or optional parallel port</td><td>Continue with Adding a Printer from the Zebra Setup Utilities Screen on page 81.</td></tr></table></td></tr>
</table>

Connect a Computer to the Printer's USB Port

Complete the steps in this section only after you have installed the Zebra Setup Utilities program. If necessary, complete the steps in *Install Zebra Setup Utilities* on page 65 before continuing.

Important • You must install the Zebra Setup Utilities program before connecting the printer to your computer. Your computer will not install the correct printer drivers if you connect the printer to it without the Zebra Setup Utilities program.

Caution • Ensure that the printer power is off (**O**) before connecting data communications cables. Connecting a data communications cable while the power is on (**I**) may damage the printer.

To connect the printer to your computer by USB, complete these steps:

Running the System Prepare Wizard

If you are at the Zebra Setup Utilities screen, you do not need to complete this section. Continue with *Connecting the printer to a USB port on your computer* on page 75.

The first time that you install the Zebra Setup Utilities program and printer drivers, you are prompted to follow the System Prepare Wizard.

Figure 8 • System Prepare Wizard

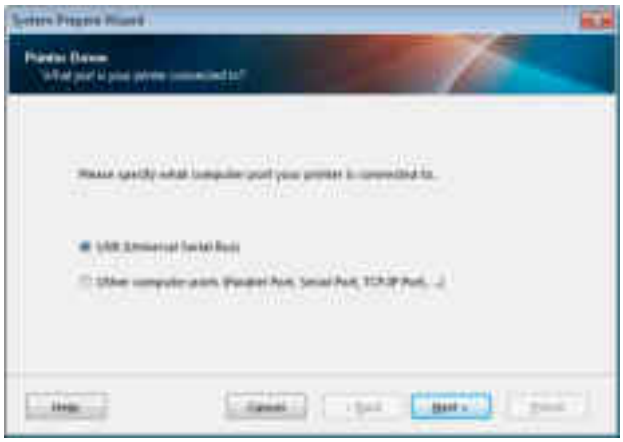

1. Click Next.

   The System Prepare Wizard prompts you to connect the printer to the USB port on your computer.

2. Click Finish.

   The Zebra Setup Utilities screen displays.

Connecting the printer to a USB port on your computer

Complete the steps in this section only after the System Prepare Wizard prompts you to do so or after you have opened the Zebra Setup Utilities program. If necessary, complete the steps in *Install Zebra Setup Utilities* on page 65 before continuing.

Figure 9 • Zebra Setup Utilities Screen

3. Connect one end of the USB cord to the USB port on your printer and the other end to your computer.

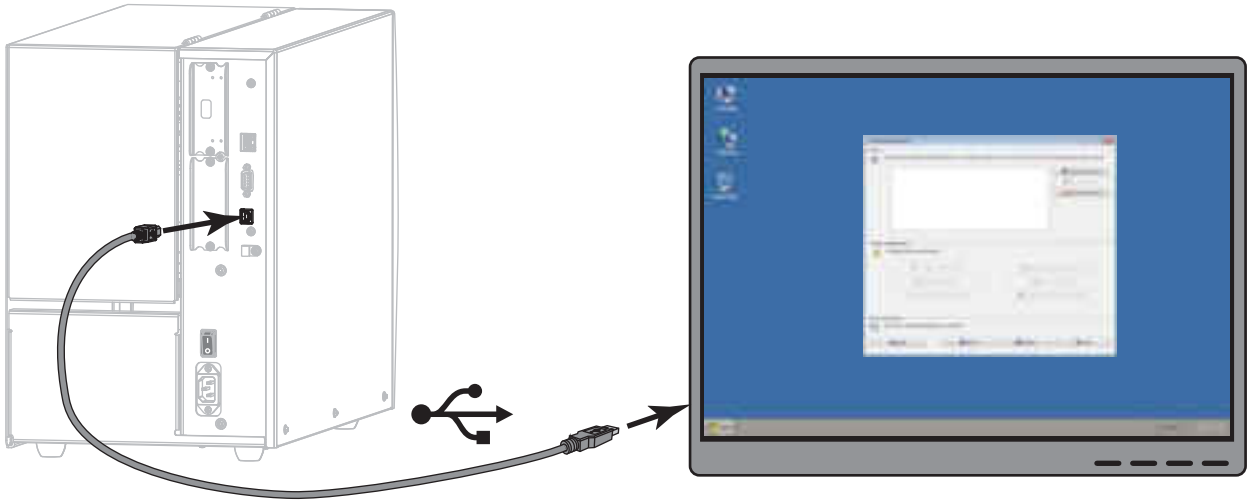

4. Plug the female end of the A/C power cord into the A/C power connector on the back of the printer.

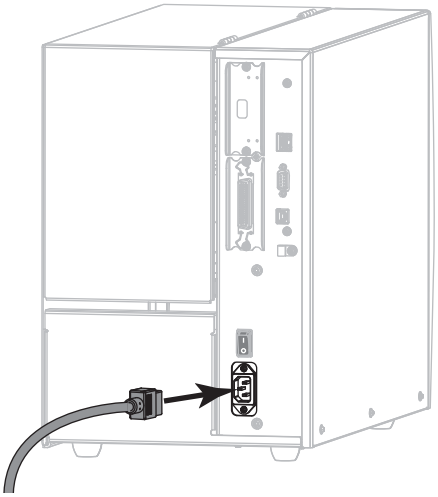

5. Plug the male end of the A/C power cord into an appropriate power outlet.

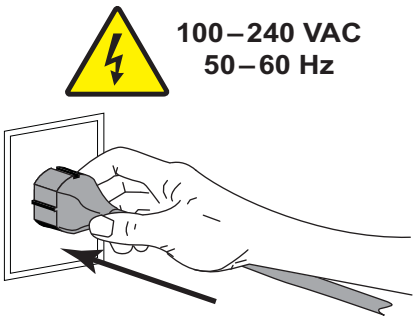

6. Turn on (**I**) the printer.

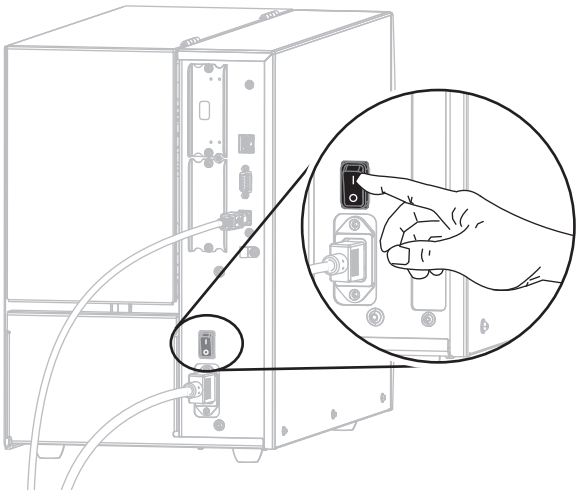

As the printer boots up, your computer completes the driver installation and recognizes your printer.

The installation for the USB connection is complete.

Connect a Computer to the Printer's Serial or Parallel Port

Complete the steps in this section only after you have installed the Zebra Setup Utilities program. If necessary, complete the steps in *Install Zebra Setup Utilities* on page 65 before continuing.

Important • You must install the Zebra Setup Utilities program before connecting the printer to your computer. Your computer will not install the correct printer drivers if you connect the printer to it without the Zebra Setup Utilities program.

Caution • Ensure that the printer power is off (**O**) before connecting data communications cables. Connecting a data communications cable while the power is on (**I**) may damage the printer.

To connect the printer to your computer by USB, complete these steps:

If you are at the Zebra Setup Utilities screen, you do not need to complete this section. Continue with *Adding a Printer from the Zebra Setup Utilities Screen* on page 81.

Running the System Prepare Wizard

The first time that you install the Zebra Setup Utilities program and printer drivers, you are prompted to follow the System Prepare Wizard.

Figure 10 • System Prepare Wizard

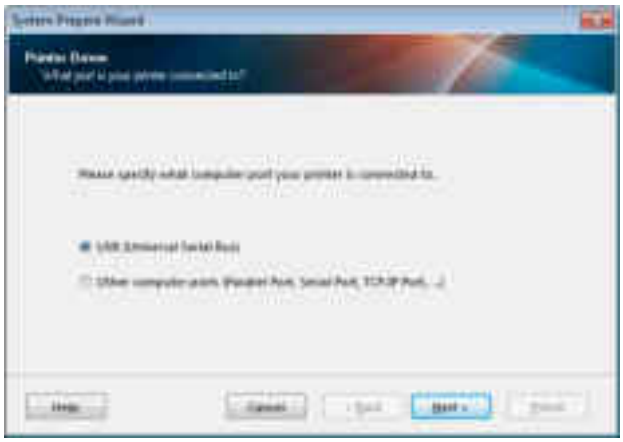

1. Select “Other computer ports (Parallel Port, Serial Port, TCP-IP Port, ...), and then click Next.

   The new printer wizard prompts you to begin the installation procedure.

2. Click Finish.

   The printer driver wizard displays.

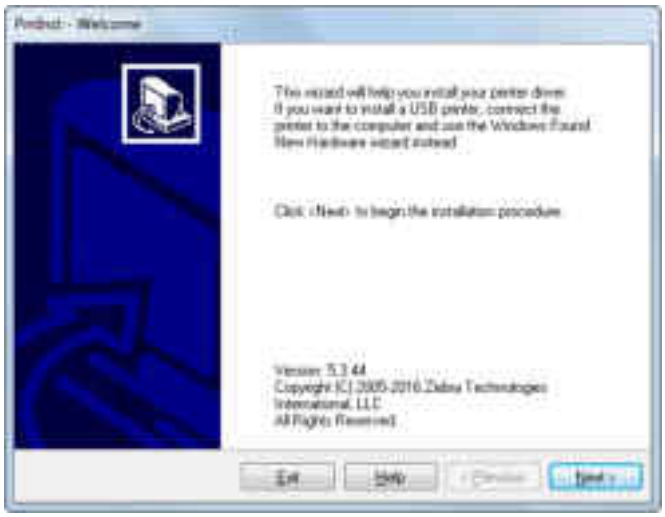

3. Click Next.

   You are prompted to select an installation option.

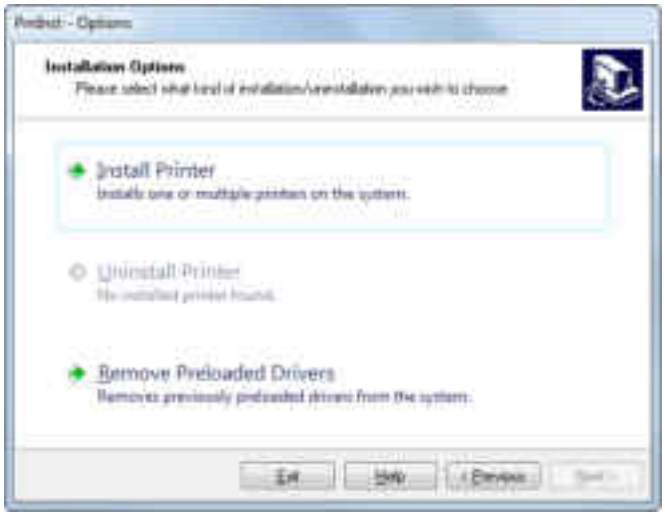

4. Continue with step 6 on page 82.

Adding a Printer from the Zebra Setup Utilities Screen

Figure 11 • Zebra Setup Utilities Screen

5. On the Zebra Setup Utilities screen, click Install New Printer.
   You are prompted to select an installation option.

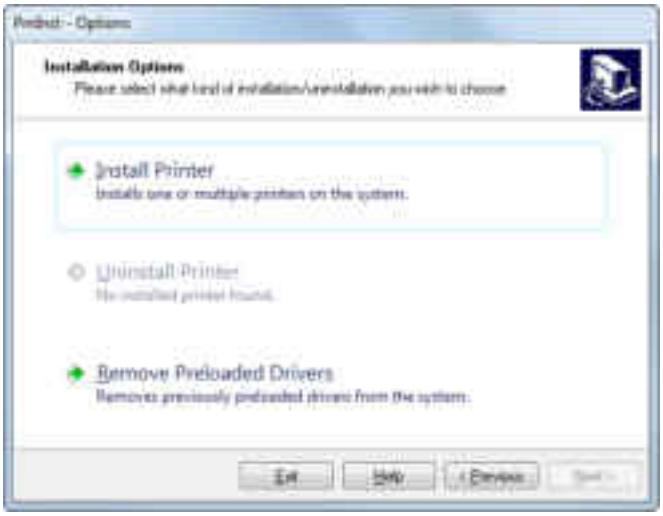

6. Click Install Printer.

   You are prompted to select a printer type.

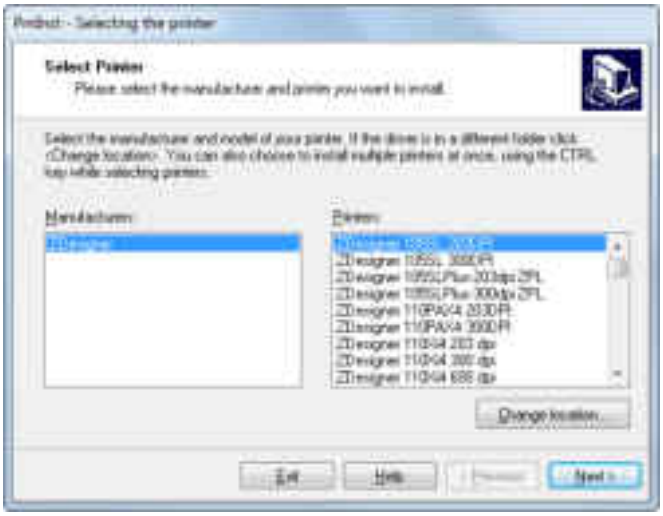

7. Select your printer model and resolution.

   The model and resolution are on a part number sticker on the printer, usually located below the media spindle. The information will be in the following format:

   `Part Number: XXXXXxY - xxxxxxxx`

   where

   XXXXX = the printer model

   Y = the printer resolution (2 = 203 dpi, 3 = 300 dpi)

   For example, in the part number **ZT510**x**3** – xxxxxxxx

   ZT510 indicates that the printer is a ZT510 model

   3 indicates that the printhead resolution is 300 dpi

8. Click Next.

   You are prompted for a printer name, the port to which the printer will be connected, and the language for the program.

9. Change the printer name (if desired), and select the appropriate port and language.

10. Click Next.

You are prompted to launch other setup wizards.

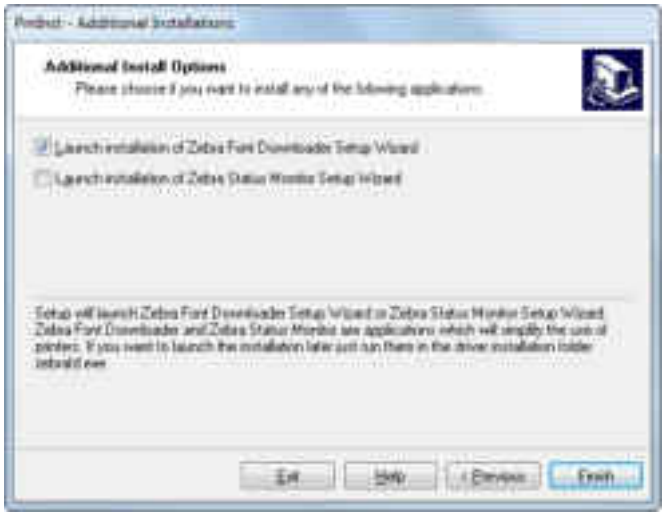

11. Check the desired options, and then click Finish.

The printer driver is installed. If you are prompted that other programs might be affected, click Next.

Connecting the printer to a serial or parallel port on your computer

12. Connect one or both cords to the appropriate ports on your printer.

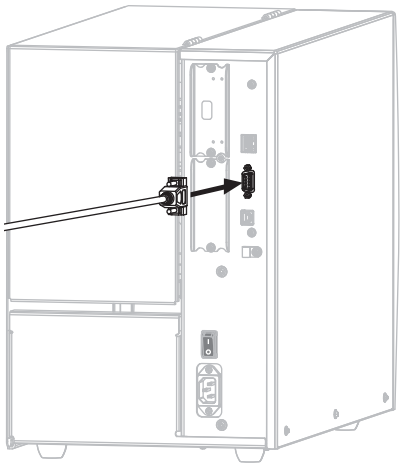

Serial Connector

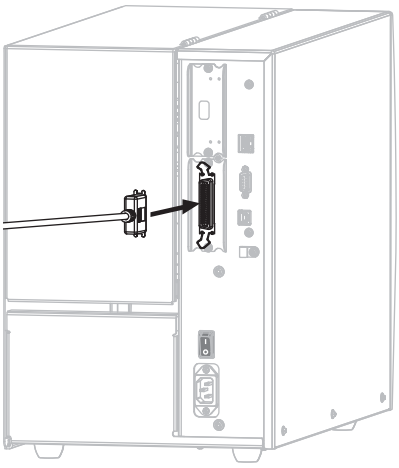

Parallel Connector

13. Connect the other end of the cord to the appropriate port on your computer.

14. Plug the female end of the A/C power cord into the A/C power connector on the back of the printer.

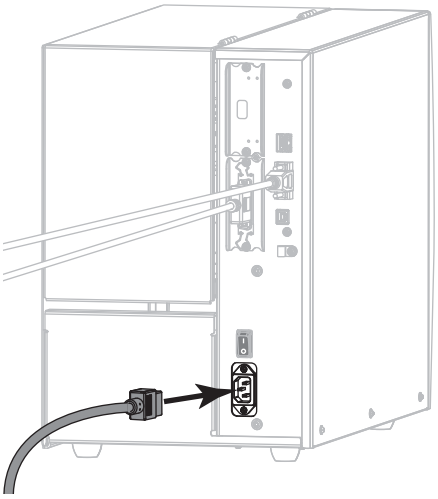

15. Plug the male end of the A/C power cord into an appropriate power outlet.

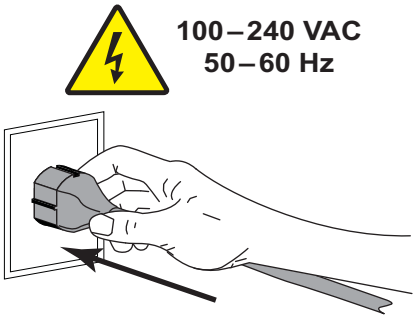

16. Turn on (**I**) the printer.

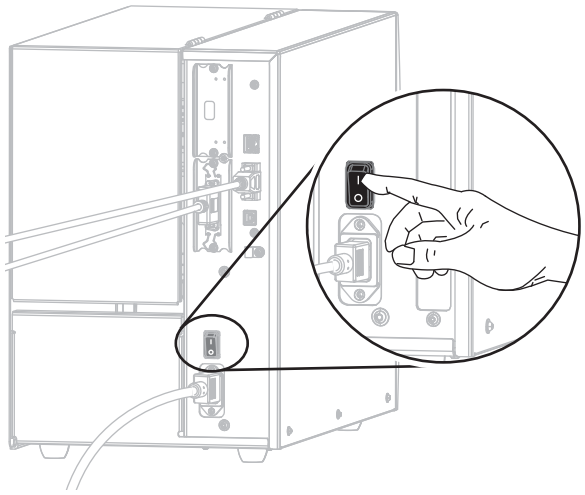

The printer boots up.

Configuring the printer (if necessary)

17. If necessary, adjust the printer's port settings to match those of your computer. For more information, see *PORTS* on page 105.

The installation for serial or parallel connections is complete.

Connect to Your Network through the Printer's Ethernet Port

If you wish to use a wired print server (Ethernet) connection, you may need to connect the printer to your computer using one of the other available connections. While the printer is connected via one of those connections, you would configure the printer to communicate with your Local Area Network (LAN) through the printer's wired print server.

For additional information about Zebra print servers, refer to the *ZebraNet Wired and Wireless Print Server User Guide*. To download the latest version of this guide, go to http://www.zebra.com/zt500-info.

To connect the printer to your computer by a wired print server, complete these steps:

1. Install Zebra Setup Utilities as instructed in *Install Zebra Setup Utilities* on page 65.
2. Plug the female end of the A/C power cord into the A/C power connector on the back of the printer.

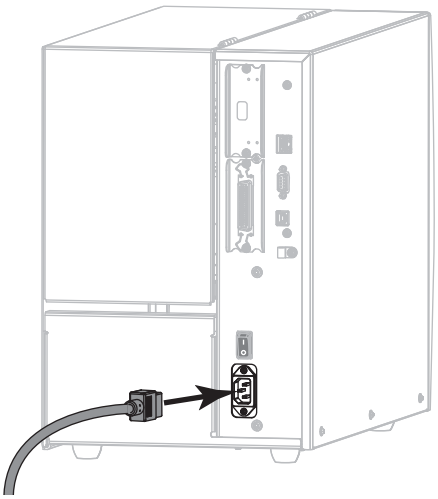

3. Plug the male end of the A/C power cord into an appropriate power outlet.

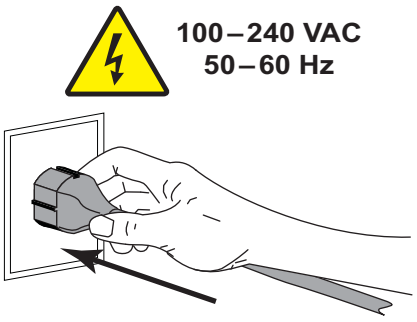

4. Turn on (**I**) the printer.

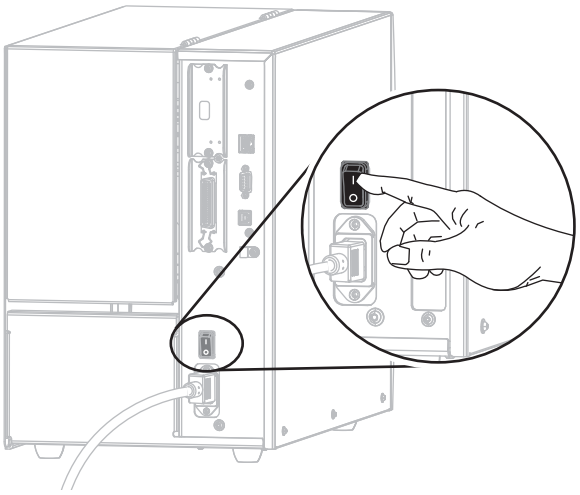

The printer boots up.

5. Connect the printer to an Ethernet cable that is connected to your network.

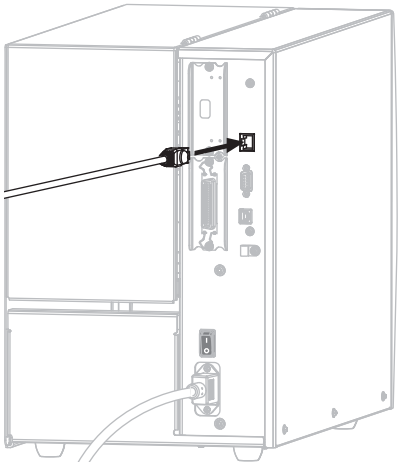

The printer attempts to communicate with your network. If it is successful, it fills in your LAN's gateway and subnet values and gets an IP address. The printer display will alternate between the printer's firmware version and its IP address.

6. Check the display to see if an IP address was assigned to the printer. See *WIRED IP ADDRESS* on page 139.

If the printer's IP address is...	Then...
0.0.0.0 **or** **000.000.000.000**	Continue with *Configuring the printer with your LAN information (if necessary)* on page 88.
any other value	Continue with *Adding a Printer from the Zebra Setup Utilities Screen* on page 89.

Configuring the printer with your LAN information (if necessary)

If your printer connected to your network automatically, you do not need to complete this section. Continue with *Adding a Printer from the Zebra Setup Utilities Screen* on page 89.

7. Connect the printer to your computer using a USB, serial, or optional parallel port as instructed in *Connect a Computer to the Printer's USB Port* on page 74 or *Connect a Computer to the Printer's Serial or Parallel Port* on page 78.

8. Configure the following printer settings. You can change the values through the Zebra Setup Utilities (click Configure Printer Connectivity on the Zebra Setup Utilities screen) or by the ways listed at the following links. Contact your network administrator for the proper values for your network.

   - *WIRED IP PROTOCOL* on page 142 (change the value from ALL to PERMANENT)
   - *WIRED GATEWAY* on page 141 (match the gateway value of your LAN)
   - *WIRED SUBNET MASK* on page 140 (match the subnet value of your LAN)
   - *WIRED IP ADDRESS* on page 139 (assign a unique IP address to the printer)

9. After the print server settings have been configured, reset the network to apply the changes. See *RESET NETWORK* on page 154.

Adding a Printer from the Zebra Setup Utilities Screen

10. If necessary, open the Zebra Setup Utilities program.

The Zebra Setup Utilities screen displays.

Figure 12 • Zebra Setup Utilities Screen

11. Click Install New Printer.

The printer driver wizard displays.

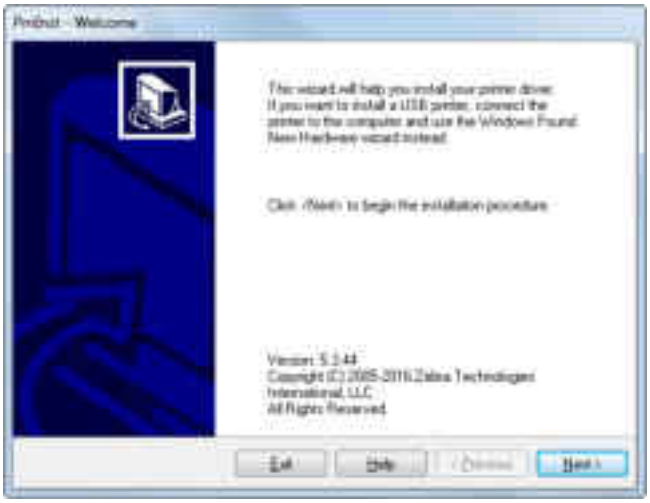

12. Click Next.

You are prompted to select an installation option.

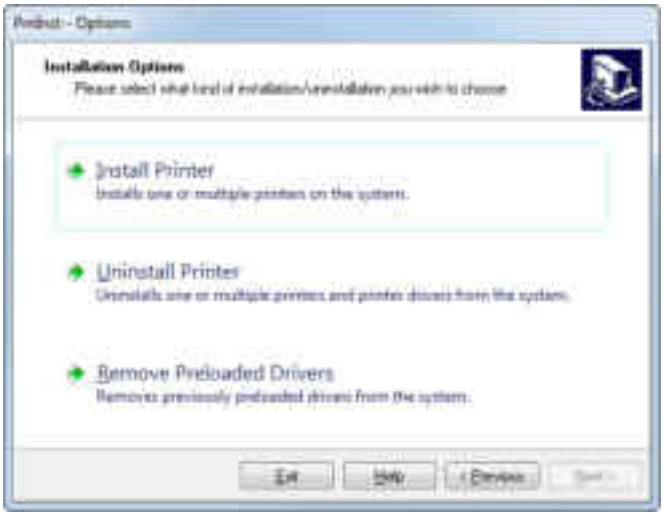

13. Click Install Printer.

You are prompted to select a printer type.

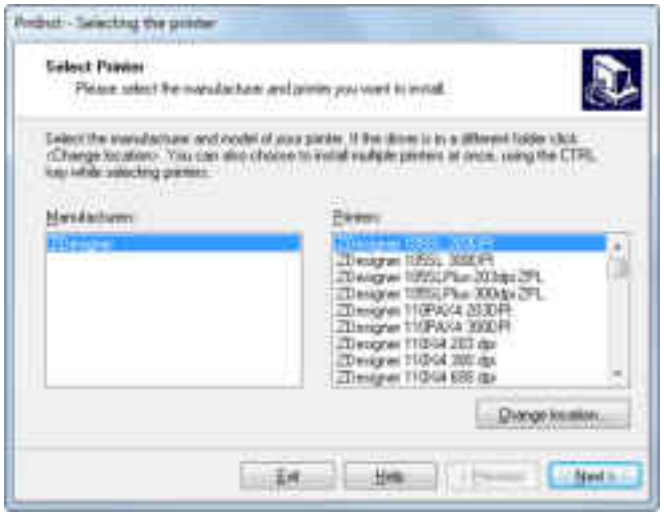

14. Select your printer model and resolution.

The model and resolution are on a part number sticker on the printer, usually located below the media spindle. The information will be in the following format:

`Part Number: XXXXXxY – xxxxxxxx`

where

XXXXX = the printer model

Y = the printer resolution (2 = 203 dpi, 3 = 300 dpi)

For example, in the part number **ZT510x3** – xxxxxxxx

ZT510 indicates that the printer is a ZT510 model

3 indicates that the printhead resolution is 300 dpi

15. Click Next.

You are notified that the printer is already installed.

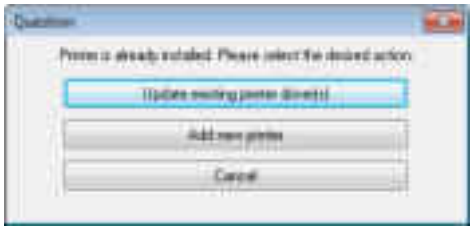

16. Click Add new printer.

You are prompted for a printer name, the port to which the printer will be connected, and the language for the printer display.

17. Click Add Port.

The wizard prompts you for a name for the port and the IP address of your printer.

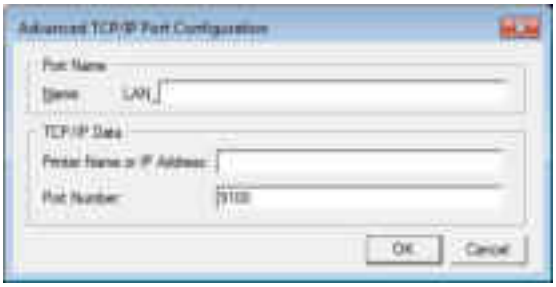

Note • If you have other applications open, you may be prompted that the driver is locked by another process. You may click Next to continue or Exit to allow you to save your work before continuing with this installation.

18. Give the port a name that you can recognize when it appears in the list of available ports.

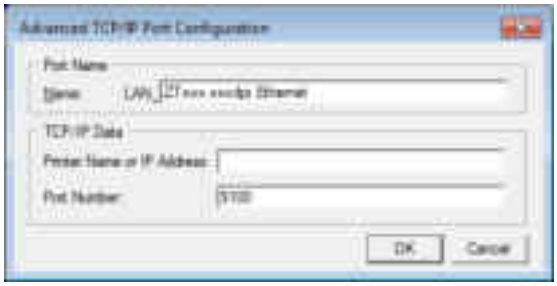

19. Enter the printer's IP address. This could be one that was assigned automatically or one that you specified manually in the previous section.

20. Click OK.

    A printer driver is created with the port name that you assigned. The new printer port appears in the list of available ports.

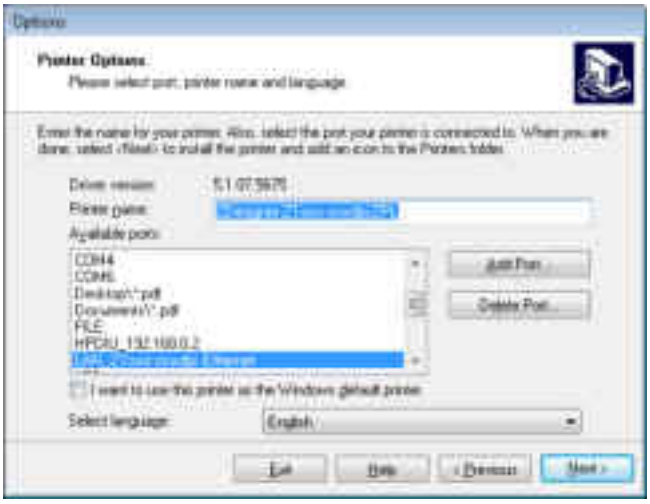

21. Click Next.

    You are prompted to launch other setup wizards.

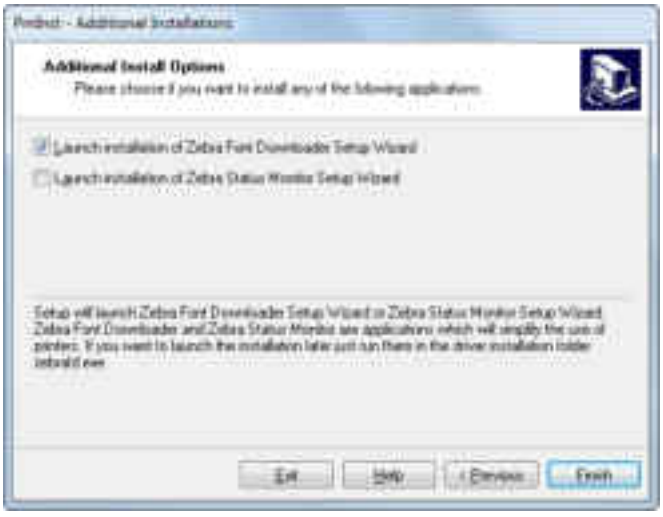

22. Check the desired options, and then click Finish.

The printer driver is installed. If you are prompted that other programs might be affected, click the appropriate option to continue.

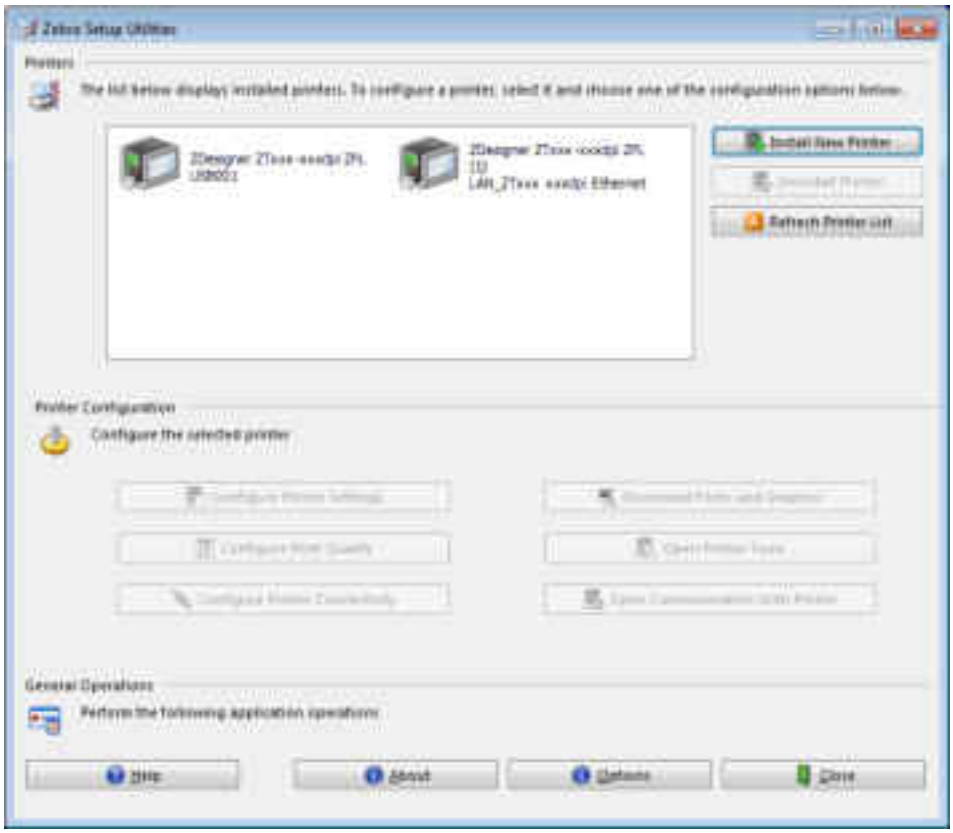

The installation for wired (Ethernet) connections is complete.

Connect the Printer to Your Wireless Network

If you wish to use the printer's optional wireless print server, you must first connect the printer to your computer using one of the other available connections. While the printer is connected via one of those connections, you configure the printer to communicate with your Wireless Local Area Network (WLAN) through the wireless print server.

For additional information about Zebra print servers, refer to the *ZebraNet Wired and Wireless Print Server User Guide*. To download the latest version of this guide, go to http://www.zebra.com/zt500-info.

To connect the printer to your computer by an optional wireless print server, complete these steps:

1. Install Zebra Setup Utilities as instructed in *Install Zebra Setup Utilities* on page 65.
2. Connect the printer to your computer using a USB, serial, or optional parallel port as instructed in *Connect a Computer to the Printer's USB Port* on page 74 or *Connect a Computer to the Printer's Serial or Parallel Port* on page 78.
3. Configure the following printer settings. You can change the values through the Zebra Setup Utilities (click Configure Printer Connectivity on the Zebra Setup Utilities screen) or by the ways listed at the following links. Contact your network administrator for the proper values for your network.
   - *WLAN IP PROTOCOL* on page 147 (change the value from ALL to PERMANENT)
   - *WLAN GATEWAY* on page 146 (match the gateway value of your WLAN)
   - *WLAN SUBNET MASK* on page 145 (match the subnet value of your WLAN)
   - *WLAN IP ADDRESS* on page 144 (assign a unique IP address to the printer)
4. After the print server settings have been configured, reset the network to apply the changes. See *RESET NETWORK* on page 154.

Adding a Printer from the Zebra Setup Utilities Screen

5. If necessary, open the Zebra Setup Utilities program.
   The Zebra Setup Utilities screen displays.

Figure 13 • Zebra Setup Utilities Screen

6. Click Install New Printer.
   The printer driver wizard displays.

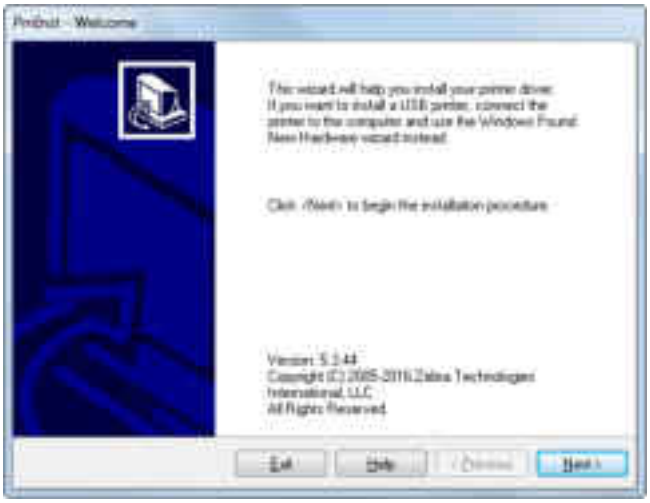

7. Click Next.

   You are prompted to select an installation option.

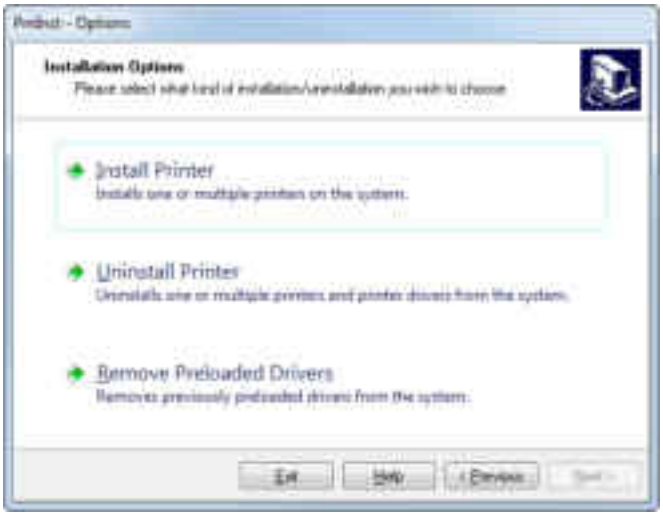

8. Click Install Printer.

   You are prompted to select a printer type.

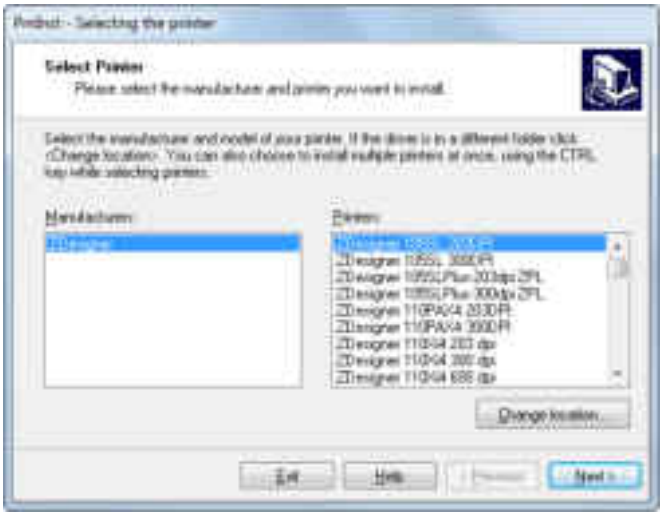

9. Select your printer model and resolution.

   The model and resolution are on a part number sticker on the printer, usually located below the media spindle. The information will be in the following format:

   `Part Number: XXXXXxY – xxxxxxxx`

   where

   XXXXX = the printer model

   Y = the printer resolution (2 = 203 dpi, 3 = 300 dpi)

   For example, in the part number **ZT510x3** – xxxxxxxx

   ZT510 indicates that the printer is a ZT510 model

   3 indicates that the printhead resolution is 300 dpi

10. Click Next.

You are notified that the printer is already installed.

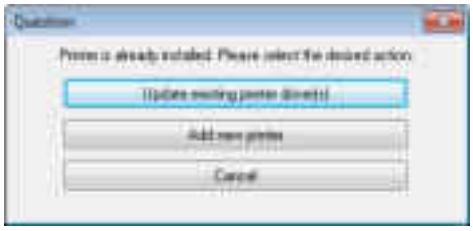

11. Click Add new printer.

You are prompted for a printer name, the port to which the printer will be connected, and the language for the printer display.

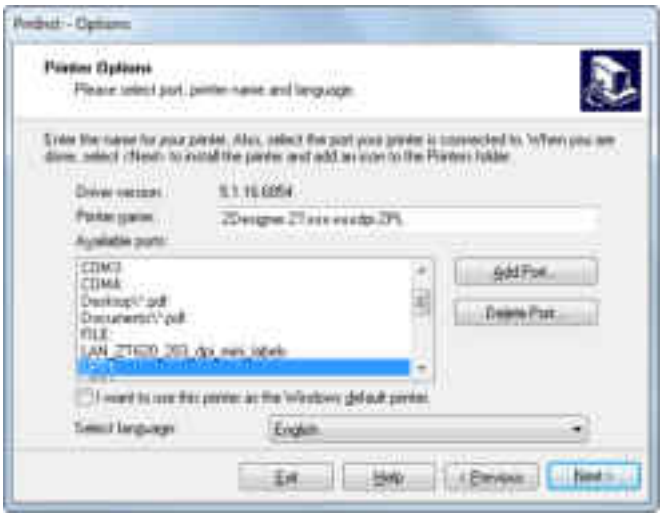

12. Click Add Port.

The wizard prompts you for a name for the port and the IP address of your printer.

Note • If you have other applications open, you may be prompted that the driver is locked by another process. You may click Next to continue or Exit to allow you to save your work before continuing with this installation.

13. Give the port a name that you can recognize when it appears in the list of available ports.

14. Enter the printer's IP address. This could be one that was assigned automatically or one that you specified manually in the previous section.

15. Click OK.

    A printer driver is created with the port name that you assigned. The new printer port appears in the list of available ports.

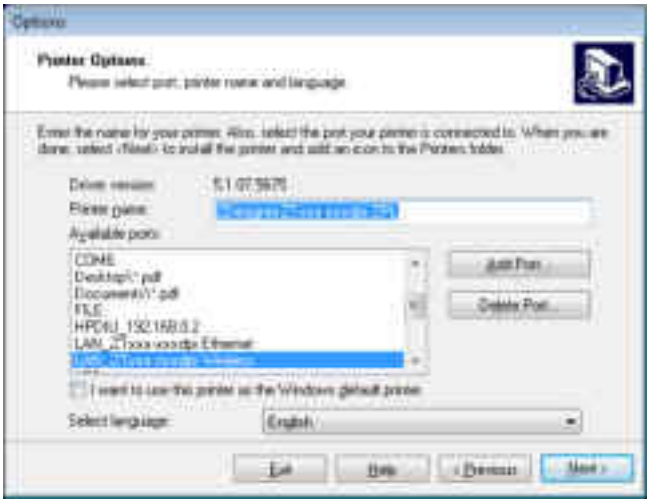

16. Click Next.

    You are prompted to launch other setup wizards.

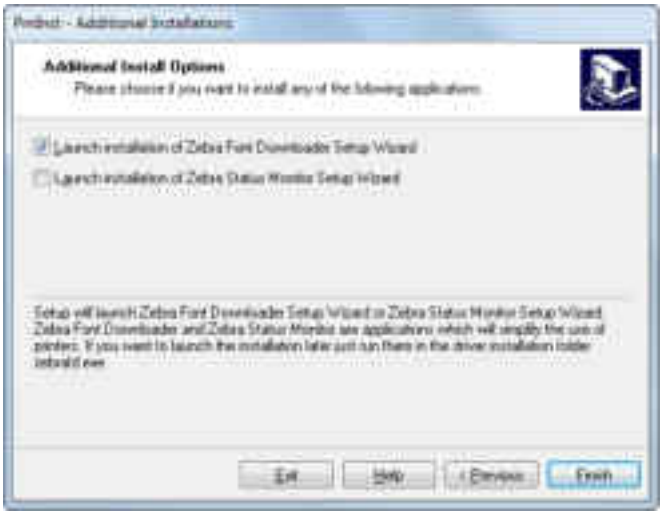

17. Check the desired options, and then click Finish.

The printer driver is installed. If you are prompted that other programs might be affected, click the appropriate option to continue.

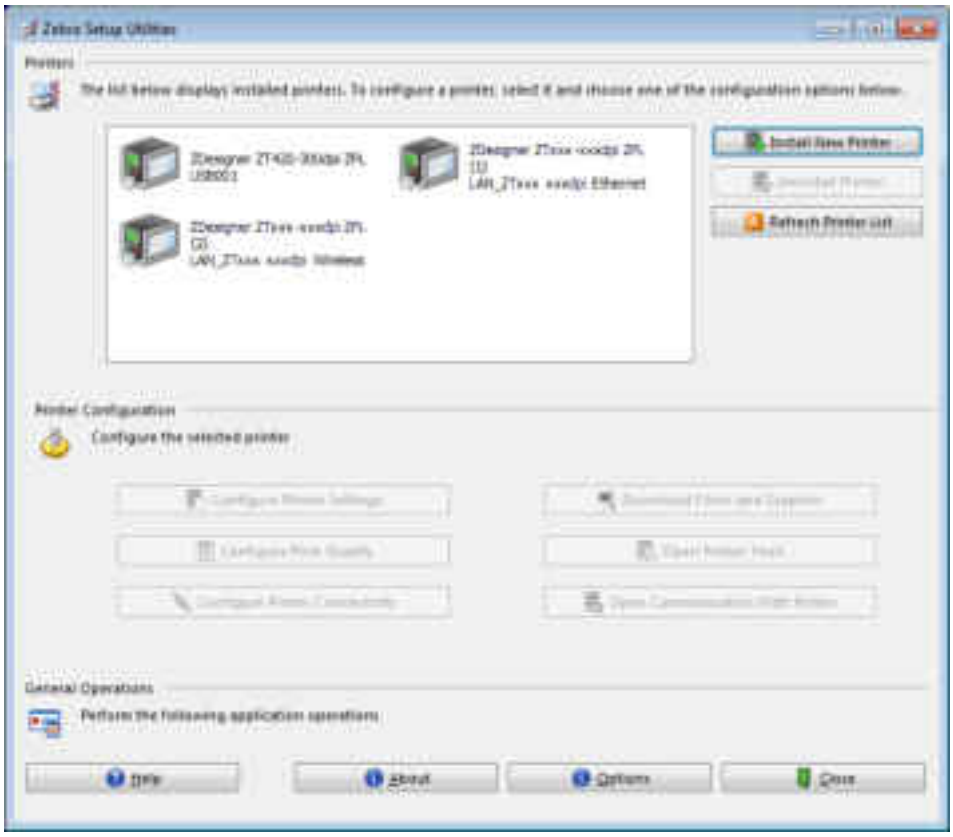

The installation for wireless communication is complete.

Print a Test Label and Make Adjustments

After you have loaded media, loaded ribbon (if using Thermal Transfer media), installed the printer driver, and connected your printer to your computer, use the directions in this section to print a test label. Printing this label allows you to see if your connection is working and if you need to adjust any of the printer settings.

To print a test label and adjust the printer (if necessary), complete these steps:

1. Open the Zebra Setup Utilities to return to the Zebra Setup Utilities screen.

2. Click on one of the available print drivers for your printer.
3. Click Open Printer Tools.

   The Tools window displays the available printer commands.

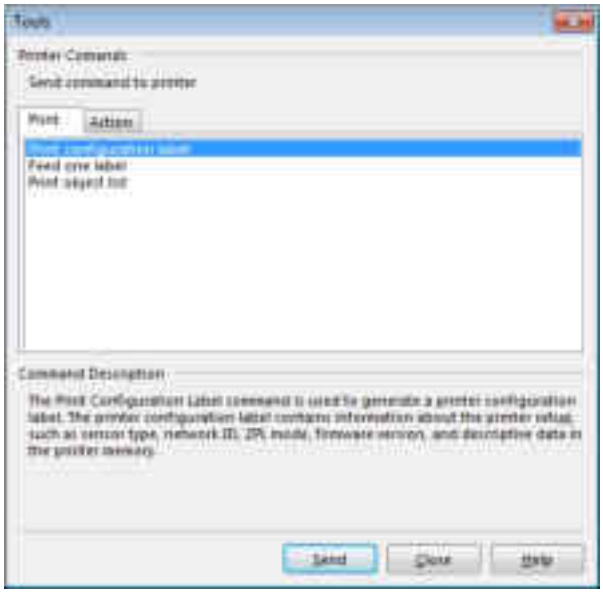

4. Click Send to print a printer configuration label.

   If your connection is working correctly and your printer is correctly loaded with media and ribbon (if used), a printer configuration label prints.

Figure 14 • Sample Printer Configuration Label

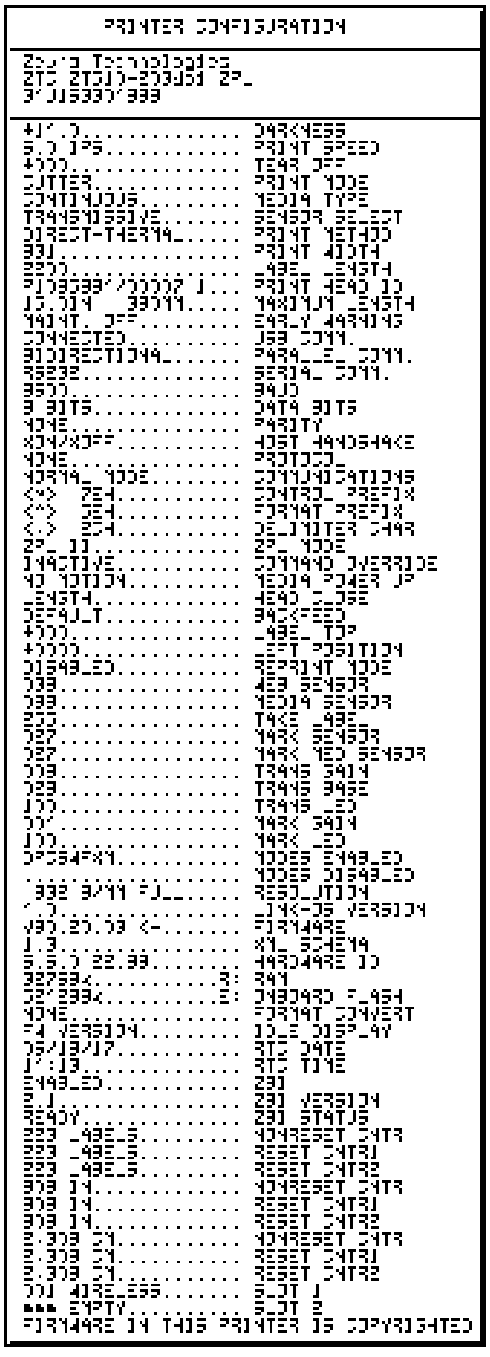

5. Did the printer configuration label print, and is the print quality acceptable?

If...	Then...
The label printed and the print quality is acceptable	Your printer is ready for printing. Continue with the label designer program of your choice. You may use ZebraDesigner™, which you can download from http://www.zebra.com.
The label did not print	**a.** Close the Tools window and make sure that you selected the correct printer driver before you click Open Printer Tools. Try printing the label again. **b.** If the label still did not print, check the connections between your printer and your computer or your printer and your network. **c.** If necessary, modify the printer's settings to make them match your computer's settings.
The label prints, but with poor quality or other issues	See *Diagnostics and Troubleshooting* on page 215.

3

Printer Configuration and Adjustment

This section assists you with configuration of and adjustments to the printer.

Contents

Adjust Printer Settings 104
Calibrate the Ribbon and Media Sensors 177
Adjust the Printhead Pressure and Toggle Position 183
Adjust the Transmissive Media Sensors 188
Remove Used Ribbon 191
Install the Rewind/Liner Take-Up Plate 193

Adjust Printer Settings

This section presents the printer settings that you can change and identifies the tools for changing them. These tools include the following:

- The printer's **user menus**
  See the information that follows in this section.
- ZPL and Set/Get/Do (SGD) commands
  See the *Zebra® Programming Guide* for more information.
- The printer's **web pages** when the printer has an active wired or wireless print server connection
  See the *ZebraNet Wired and Wireless Print Servers User Guide* for more information.

Copies of the referenced manuals are available at http://www.zebra.com/manuals.

User Menus The following are the printer's user menus and the menu items that appear in each. Click any menu item to go to its description. For navigation instructions, see *Navigating through Screens in the Standard Display* on page 19.

SETTINGS

- DARKNESS
- PRINT SPEED
- MEDIA TYPE
- PRINT METHOD
- TEAR OFF
- PRINT WIDTH
- PRINT MODE
- LABEL TOP
- LEFT POSITION
- REPRINT MODE
- LABEL LENGTH MAX
- LANGUAGE**
- TOOLS MENU*

TOOLS

- PRINT INFORMATION**
- IDLE DISPLAY
- POWER UP ACTION
- HEAD CLOSE ACTION
- LOAD DEFAULTS
- MEDIA/RIBBON CAL**
- DIAGNOSTIC MODE
- ENERGY STAR
- CONFIG INFO TO USB
- ZBI ENABLED?
- RUN ZBI PROGRAM
- STOP ZBI PROGRAM
- PRINT USB FILE
- COPY USB FILE TO E:
- STORE E: FILE TO USB
- PRINT STATION
- PASSWORD PROTECT
- PRINT TEST FORMAT
- NETWORK MENU*

NETWORK

- ACTIVE PRINT SERVER
- PRIMARY NETWORK
- WIRED IP ADDRESS
- WIRED SUBNET MASK
- WIRED GATEWAY
- WIRED IP PROTOCOL
- WIRED MAC ADDRESS
- WLAN IP ADDRESS
- WLAN SUBNET MASK
- WLAN GATEWAY
- WLAN IP PROTOCOL
- WLAN MAC ADDRESS
- ESSID
- CHANNEL
- SIGNAL
- IP PORT
- IP ALTERNATE PORT
- PRINT INFORMATION**
- RESET NETWORK
- VISIBILITY AGENT
- LOAD DEFAULTS
- RFID MENU*

RFID

NOT SUPPORTED

LANGUAGE

- LANGUAGE**
- COMMAND LANGUAGE
- COMMAND CHAR
- CONTROL CHAR
- DELIMITER CHAR
- ZPL MODE
- VIRTUAL DEVICE
- SENSORS MENU*

SENSORS

- SENSOR TYPE
- MEDIA/RIBBON CAL**
- PRINT INFORMATION**
- LABEL SENSOR
- TAKE LABEL
- PORTS MENU*

PORTS

- BAUD RATE
- DATA BITS
- PARITY
- HOST HANDSHAKE
- WML
- BLUETOOTH MENU*

BLUETOOTH

- BLUETOOTH ADDRESS
- MODE
- DISCOVERY
- CONNECTED
- BT SPEC VERSION
- MIN SECURITY MODE
- SETTINGS MENU*

* Denotes a shortcut to the next user menu.

** Appears in multiple user menus for your convenience.

SETTINGS > DARKNESS

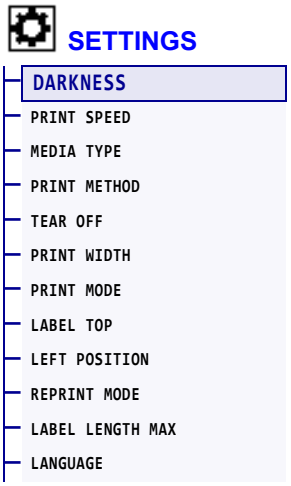

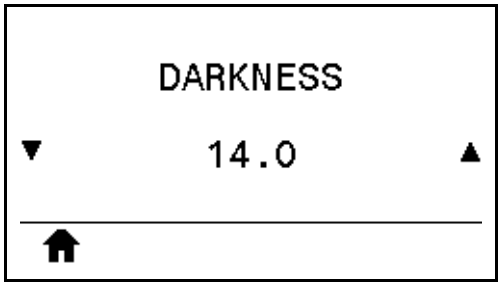

Set the print darkness to the lowest setting that provides good print quality. If you set the darkness too high, the label image may print unclearly, barcodes may not scan correctly, the ribbon may burn through, or the printhead may wear prematurely.

If desired, use the *Optimal Darkness and Speed Test* on page 225 to determine the best darkness setting.

Accepted values:	`0.0` to `30.0`
Related ZPL command(s):	`^MD`, `~SD`
SGD command used:	`print.tone`
Printer web page:	View and Modify Printer Settings > General Setup > Darkness

SETTINGS > PRINT SPEED

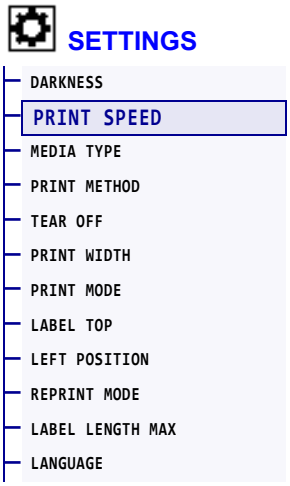

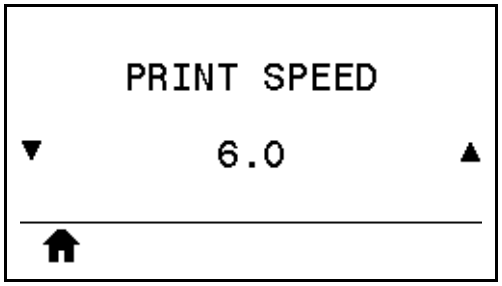

Select the speed, in inches per second (ips), for printing a label. Slower print speeds typically yield better print quality.

Accepted values:	203 dpi = 2 to 12 ips 300 dpi = 2 to 10 ips
Related ZPL command(s):	^PR
SGD command used:	media.speed

SETTINGS > MEDIA TYPE

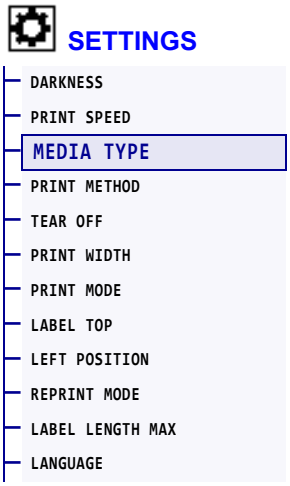

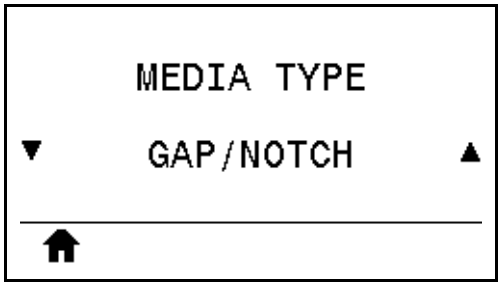

Select the type of media that you are using.

Accepted values:	• CONTINUOUS • GAP/NOTCH • MARK If you select CONTINUOUS, you must include a label length in your label format (^LL if you are using ZPL). If you select GAP/NOTCH or MARK for various noncontinuous media, the printer feeds media to calculate the label length. See *Types of Media on page 22* for more information.
Related ZPL command(s):	^MN
SGD command used:	ezpl.media_type
Printer web page:	View and Modify Printer Settings > Media Setup > Media Type

SETTINGS > PRINT METHOD

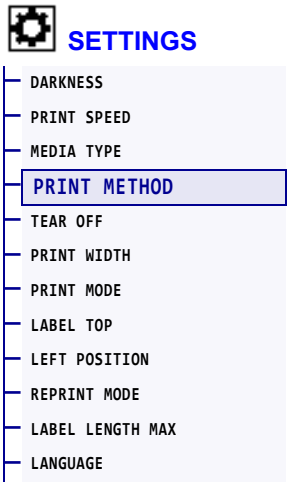

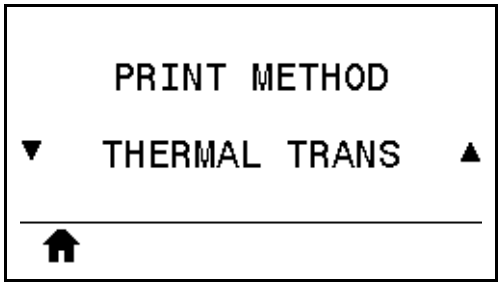

Specify if the printer needs to use ribbon for printing.

Accepted values:	• THERMAL TRANS—Uses ribbon and thermal transfer media. • DIRECT THERMAL—Uses direct thermal media and no ribbon.
Related ZPL command(s):	^MT
SGD command used:	ezpl.print_method
Printer web page:	View and Modify Printer Settings > Media Setup > Print Method

SETTINGS > TEAR OFF

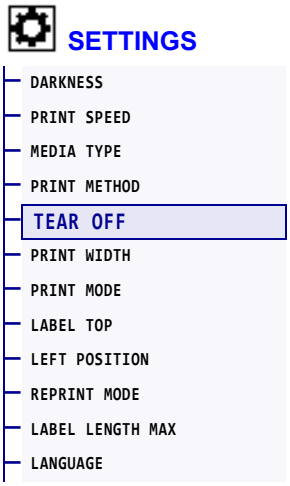

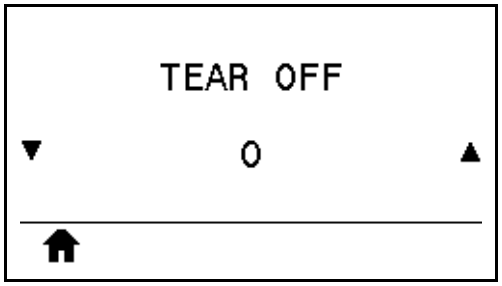

If necessary, shift the position of the media over the tear-off bar after printing.

- Lower numbers move the media into the printer by the specified number of dots (the tear line moves closer to the edge of the label just printed).
- Higher numbers move the media out of the printer (the tear line moves closer to the leading edge of the next label).

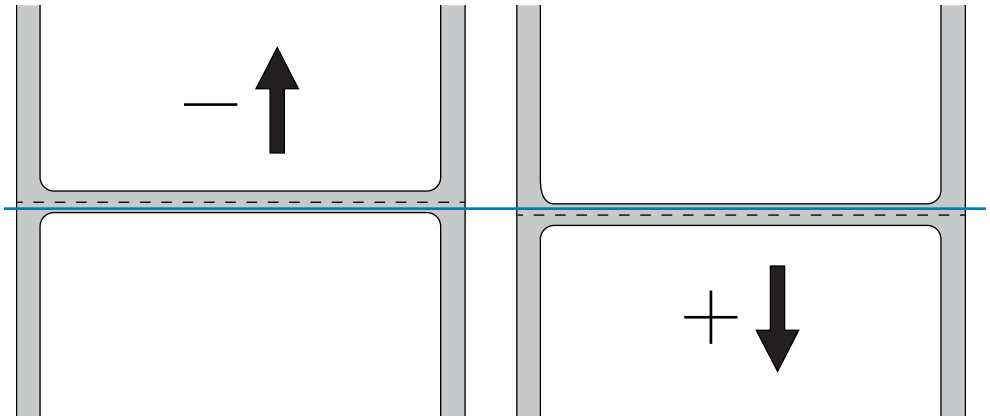

Accepted values:	`-120` to `120`
Related ZPL command(s):	`~TA`
SGD command used:	`ezpl.tear_off`
Printer web page:	View and Modify Printer Settings > General Setup > Tear Off

SETTINGS > PRINT WIDTH

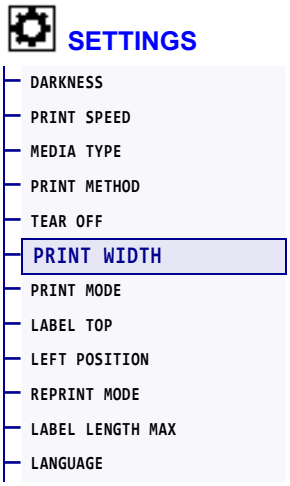

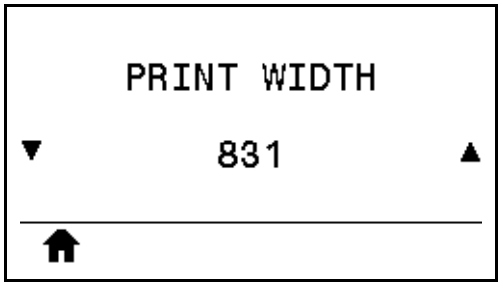

Specify the width of the labels being used, in dots. The default value is the maximum width for the printer, based on the printhead's DPI value.

Accepted values:	**Note •** Setting the width too narrow can result in portions of a label format not being printed on the media. Setting the width too wide wastes formatting memory and can cause the printer to print off of the label and onto the platen roller. This setting can affect the horizontal position of the label format if the image was inverted using the `^POI` ZPL II command. 203 dpi = `0002` to `832` 300 dpi = `0002` to `1248`
Related ZPL command(s):	`^PW`
SGD command used:	`ezpl.print_width`
Printer web page:	View and Modify Printer Settings > Media Setup > Print Width

SETTINGS > PRINT MODE

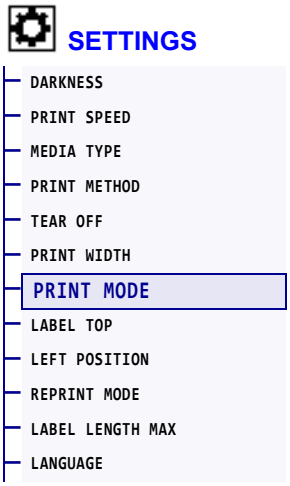

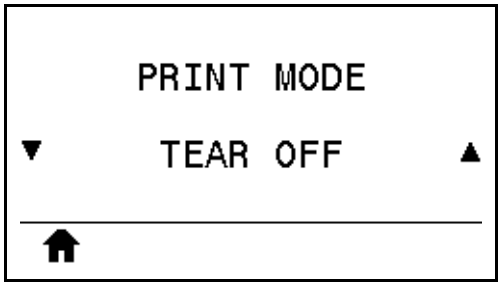

Select a print mode that is compatible with your printer options. For information about how the print mode selections work with different printer options, see *Select a Print Mode* on page 29.

Accepted values:	• TEAR OFF • PEEL-OFF • REWIND • CUTTER • DELAYED CUT • LINERLESS PEEL • LINERLESS REWIND • LINERLESS TEAR • APPLICATOR
Related ZPL command(s):	^MM
SGD command used:	media.printmode
Printer web page:	View and Modify Printer Settings > General Setup > Print Mode

SETTINGS > LABEL TOP

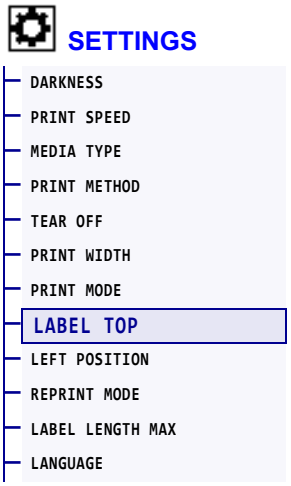

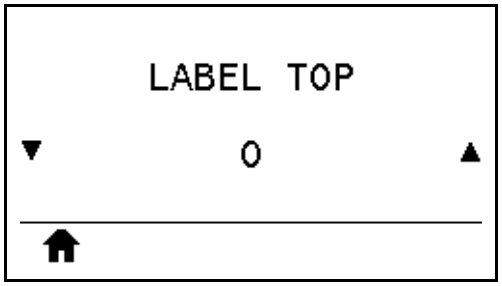

If necessary, shift the position of the image vertically on the label.

- Negative numbers move the image higher on the label (toward the printhead).
- Positive numbers move the image farther down on the label (away from the printhead) by the specified number of dots.

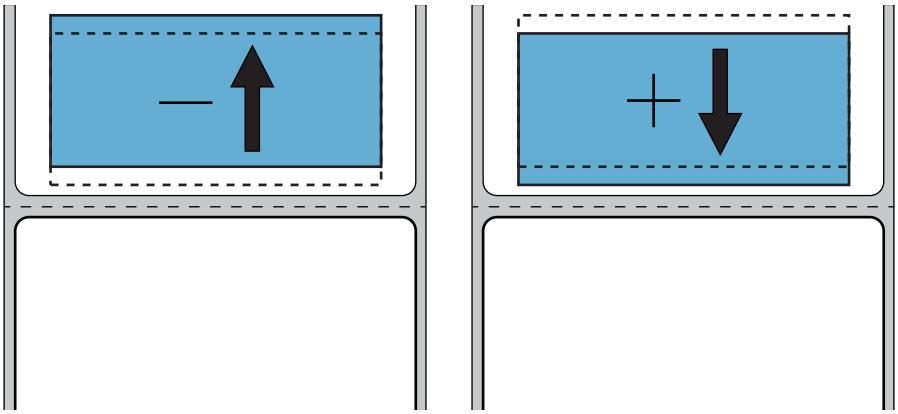

Accepted values:	`-120` to `+120`
Related ZPL command(s):	`^LT`
SGD command used:	`media.printmode`
Printer web page:	View and Modify Printer Settings > General Setup > Print Mode

SETTINGS > LEFT POSITION

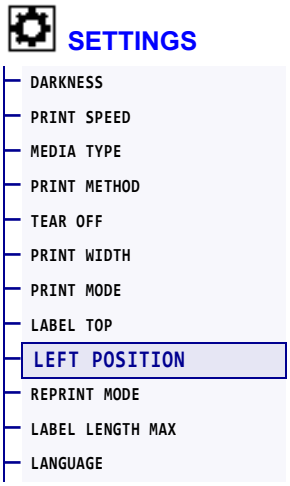

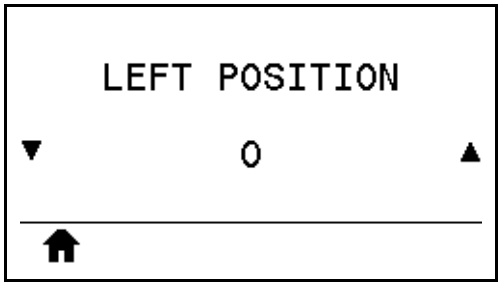

If necessary, shift the position of the image horizontally on the label.

- Negative numbers move the left edge of the image toward the left edge of the label by the number of dots selected.
- Positive numbers move the edge of the image toward the right edge of the label.

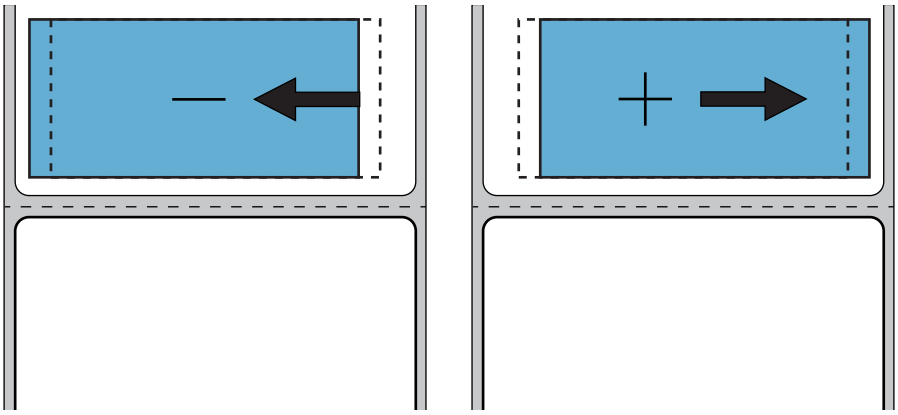

Accepted values:	`-9999` to `9999`
Related ZPL command(s):	`^LS`
SGD command used:	`zpl.left_position`
Printer web page:	View and Modify Printer Settings > Advanced Setup > Left Position

SETTINGS > REPRINT MODE

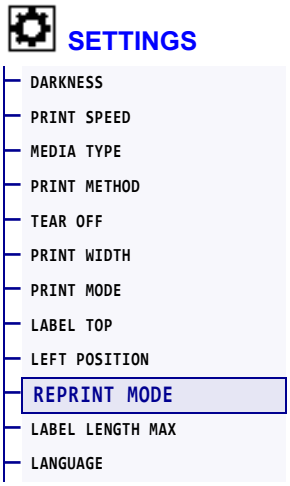

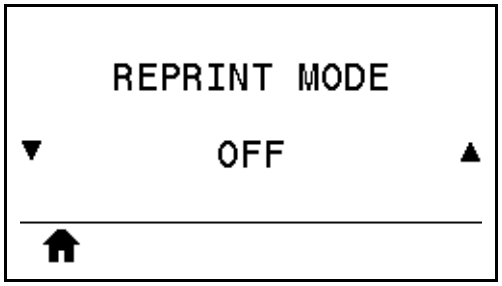

When reprint mode is enabled, you can reprint the last label printed by pressing the DOWN ARROW when at the printer's Idle Display.

Accepted values:	• ON • OFF
Related ZPL command(s):	^JZ
SGD command used:	ezpl.reprint_mode

SETTINGS > LABEL LENGTH MAX

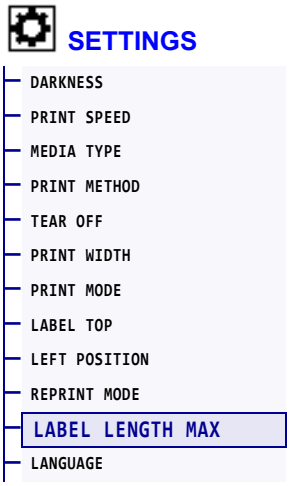

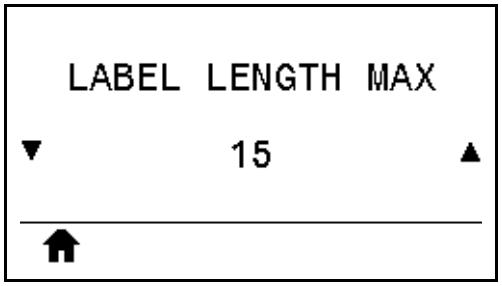

Set a maximum label length that is at least 1.0 in. (25.4 mm) greater than the actual label length plus the interlabel gap. If you set this value too small, the printer assumes that continuous media is loaded and cannot calibrate.

Accepted values:	`0` to the maximum label length supported by the printer For example, if the label length is 6.0 inches (152 mm) including the interlabel gap, set the parameter for at least 7.0 inches (178 mm).
Related ZPL command(s):	`^ML`
SGD command used:	`ezpl.label_length_max`
Printer web page:	View and Modify Printer Settings > Media Setup > Maximum Length

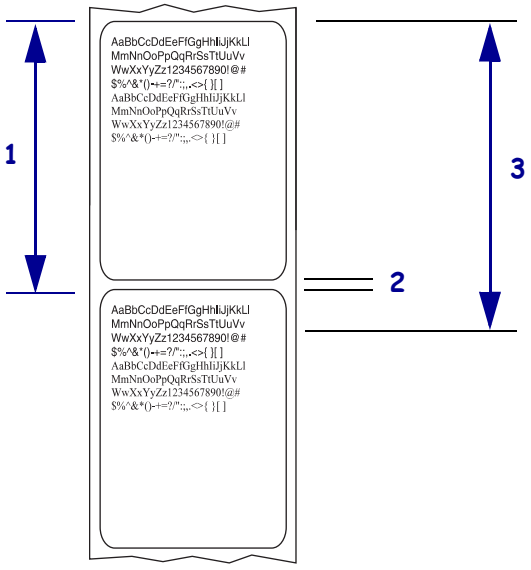

1	Label length (including interlabel gap)
2	Interlabel gap
3	Minimum label length value

TOOLS > PRINT INFORMATION

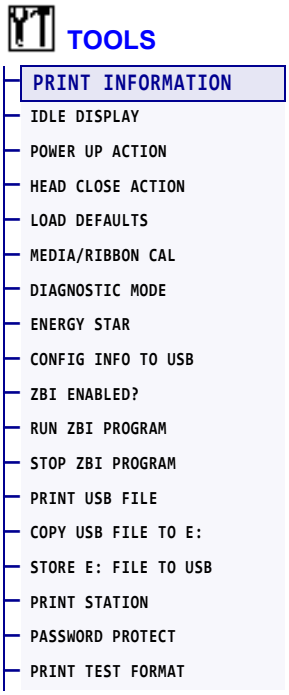

TOOLS Menu

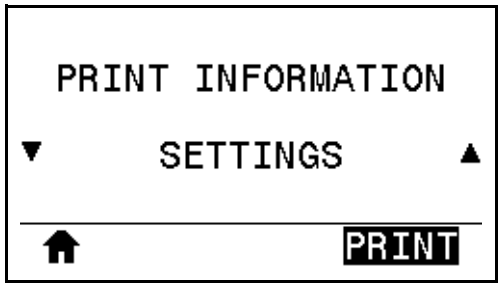

NETWORK Menu

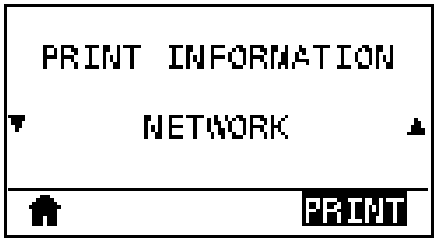

SENSORS Menu

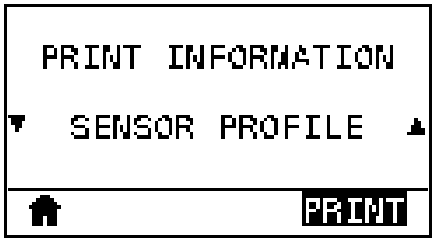

Print the specified information on one or more labels. This menu item is available through three user menus with different default values for each.

Accepted values:	• SETTINGS—Prints a printer configuration label. (See *CONFIG INFO TO USB* on page 127 for other ways to view this information.) A sample label is shown in Figure 15 on page 118. • NETWORK—Prints the settings for any print server or Bluetooth device that is installed. A sample label is shown in Figure 16 on page 118. • FORMATS—Prints the available formats stored in the printer's RAM, Flash memory, or optional memory card. • IMAGES—Prints the available images stored in the printer's RAM, Flash memory, or optional memory card. • FONTS—Prints the available fonts in the printer, including standard printer fonts plus any optional fonts. Fonts may be stored in RAM or Flash memory. • BARCODES—Prints the available barcodes in the printer. Barcodes may be stored in RAM or Flash memory. • ALL—Prints the previous six labels. • SENSOR PROFILE—Shows the sensor settings compared to actual sensor readings. To interpret the results, see *Sensor Profile* on page 228.

Related ZPL command(s):	SETTINGS: ~WC NETWORK: ~WL SENSOR PROFILE: ~JG Others: ^WD
Control panel key(s):	SETTINGS and NETWORK: Do one of the following: • Hold CANCEL during printer power-up. (Formerly called a CANCEL self test. • Hold FEED + CANCEL for 2 seconds when the printer is in the Ready state. SENSOR PROFILE: Hold FEED + CANCEL during printer power-up.
Printer web page:	View and Modify Printer Settings > Print Listings on Label

Figure 15 • Sample Printer Configuration Label

Figure 16 • Sample Network Configuration Label

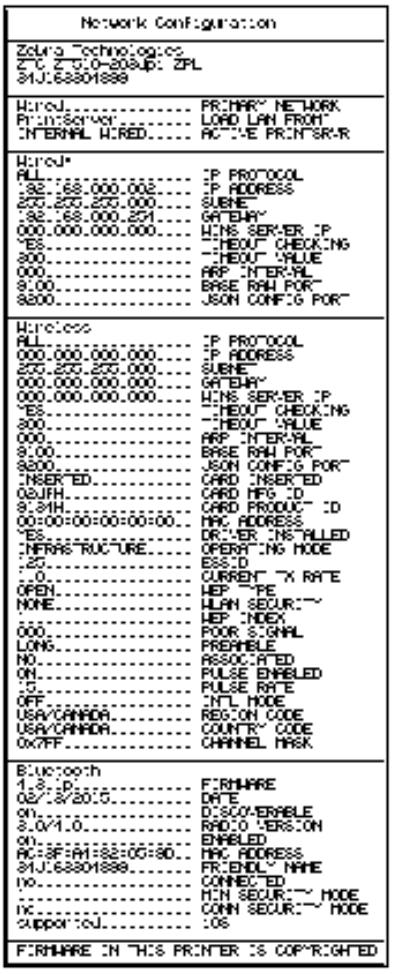

TOOLS > IDLE DISPLAY

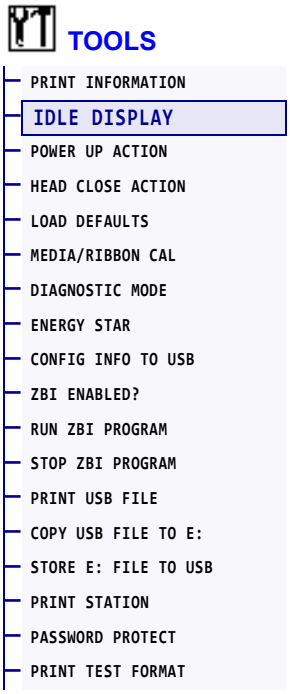

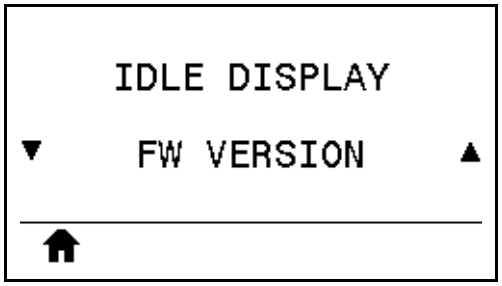

Select the information shown on the printer's display when the printer is idle.

Accepted values:	• FW VERSION • IP ADDRESS • MM/DD/YY 24 HR • MM/DD/YY 12 HR • DD/MM/YY 24 HR • DD/MM/YY 12 HR
SGD command used:	device.idle_display_format device.idle_display_value

TOOLS > POWER UP ACTION

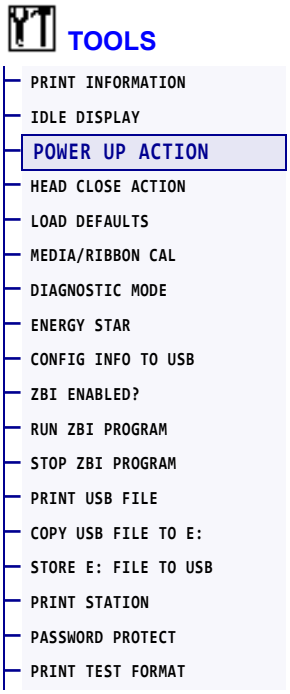

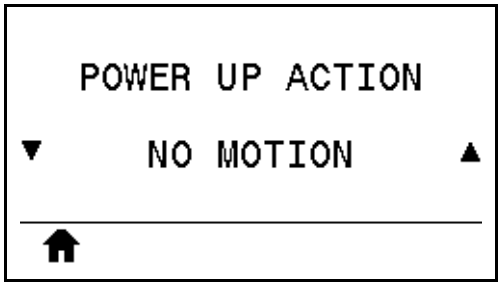

Set the action for the printer to take during the power-up sequence.

Accepted values:	• `CALIBRATE`—Adjusts sensor levels and thresholds, determines the label length, and feeds the media to the next web. • `FEED`—Feeds the labels to the first registration point. • `LENGTH`—Determines the label length using current sensor values, and feeds the media to the next web. • `NO MOTION`—Tells the printer not to move the media. You must manually ensure that the web is positioned correctly, or press feed to position the next web. • `SHORT CAL`—Sets the media and web thresholds without adjusting sensor gain, determines the label length, and feeds the media to the next web.
Related ZPL command(s):	`^MF`
SGD command used:	`ezpl.power_up_action`
Printer web page:	View and Modify Printer Settings > Calibration

TOOLS > HEAD CLOSE ACTION

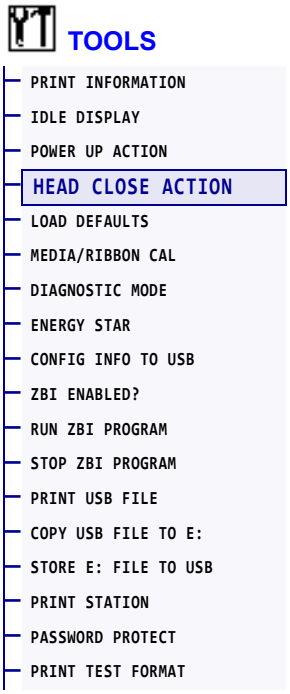

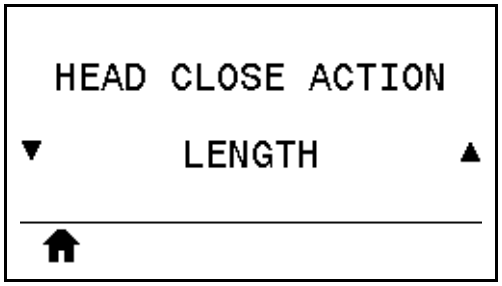

Set the action for the printer to take when you close the printhead.

Accepted values:	• CALIBRATE—Adjusts sensor levels and thresholds, determines the label length, and feeds the media to the next web. • FEED—Feeds the labels to the first registration point. • LENGTH—Determines the label length using current sensor values, and feeds the media to the next web. • NO MOTION—Tells the printer not to move the media. You must manually ensure that the web is positioned correctly, or press feed to position the next web. • SHORT CAL—Sets the media and web thresholds without adjusting sensor gain, determines the label length, and feeds the media to the next web.
Related ZPL command(s):	^MF
SGD command used:	ezpl.head_close_action
Printer web page:	View and Modify Printer Settings > Calibration

TOOLS > LOAD DEFAULTS

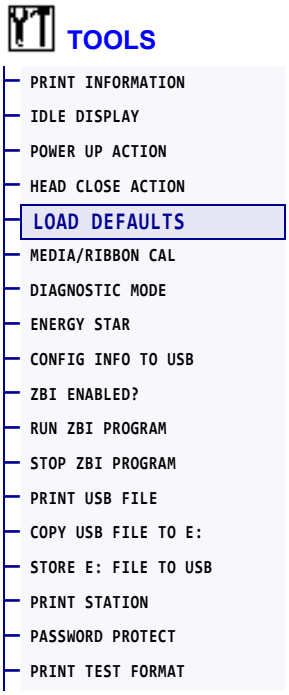

TOOLS Menu

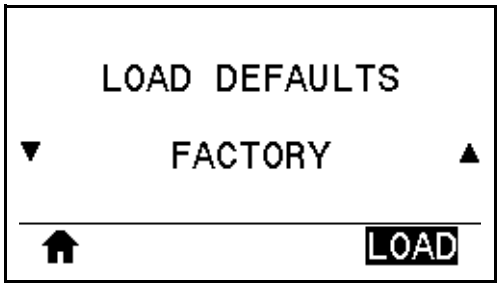

NETWORK Menu

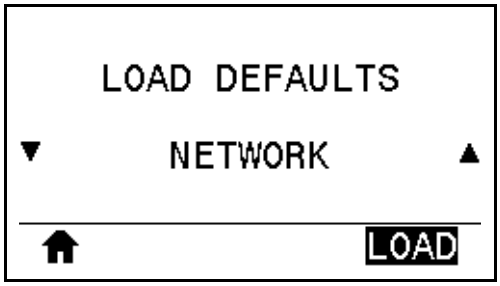

Restore specific printer, print server, and network settings back to the factory defaults. Use care when loading defaults because you will need to reload all settings that you changed manually. This menu item is available through two user menus with different default values for each.

Accepted values:	• FACTORY—Restores all printer settings other than the network settings back to the factory defaults. Use care when loading defaults because you will need to reload all settings that you changed manually. • NETWORK—Reinitializes the printer's wired or wireless print server. With a wireless print server, the printer also reassociates with your wireless network. • LAST SAVED—Loads settings from the last permanent save.
Related ZPL command(s):	FACTORY: ^JUF NETWORK: ^JUN LAST SAVED: ^JUR

Control panel key(s):	FACTORY: Hold FEED + PAUSE during printer power-up to reset the printer parameters to factory values. (Formerly called a FEED + PAUSE self test.) NETWORK: Hold CANCEL + PAUSE during printer power-up to reset the network parameters to factory values. (Formerly called a CANCEL + PAUSE self test.) LAST SAVED: N/A
Printer web page:	FACTORY: View and Modify Printer Settings > Restore Default Configuration NETWORK: Print Server Settings > Reset Print Server LAST SAVED: View and Modify Printer Settings > Restore Saved Configuration

TOOLS > MEDIA/RIBBON CAL

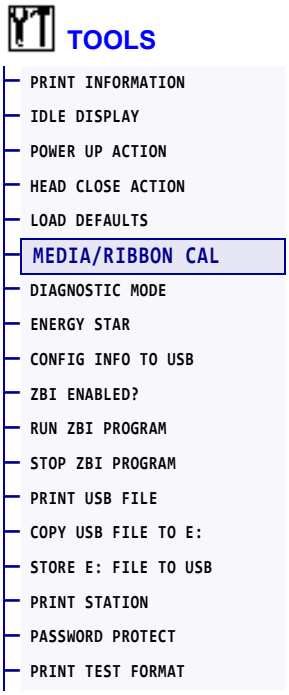

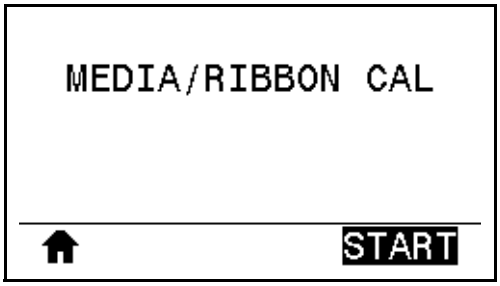

Calibrate the printer to adjust the sensitivity of the media and ribbon sensors.

For complete instructions on how to perform a calibration procedure, see *Calibrate the Ribbon and Media Sensors* on page 177.

Related ZPL command(s):	`~JC`
SGD command used:	`ezpl.manual_calibration`
Control panel key(s):	Hold PAUSE + CANCEL for 2 seconds to initiate calibration.
Printer web page:	The calibration procedure cannot be initiated through the web pages. See the following web page for settings that are set during sensor calibration: View and Modify Printer Settings > Calibration **Important** • Do not change these settings unless you are told to do so by Zebra Technical Support or by an authorized service technician.

TOOLS > DIAGNOSTIC MODE

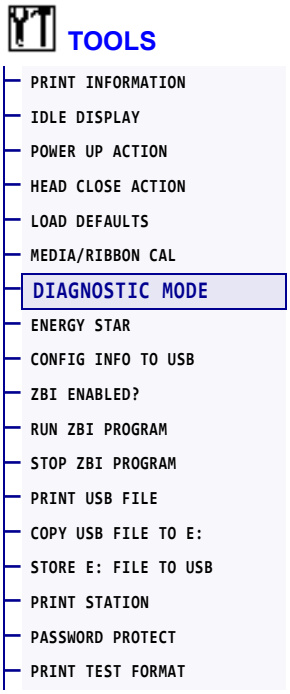

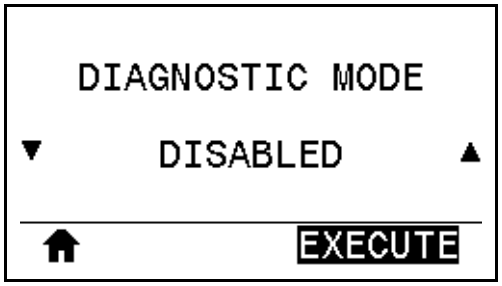

Use this diagnostics tool to cause the printer to output the hexadecimal values for all data received by the printer. For more information, see *Communication Diagnostics Test* on page 227.

Accepted values:	• DISABLED • ENABLED
Related ZPL command(s):	~JD to enable, ~JE to disable
SGD command used:	device.diagnostic_print
Control panel key(s):	Hold PAUSE + FEED for 2 seconds when the printer is in the Ready state.

TOOLS > ENERGY STAR

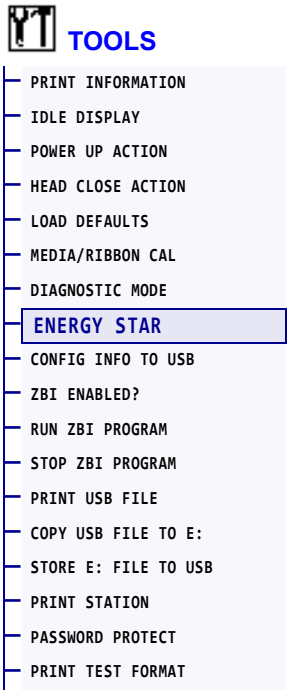

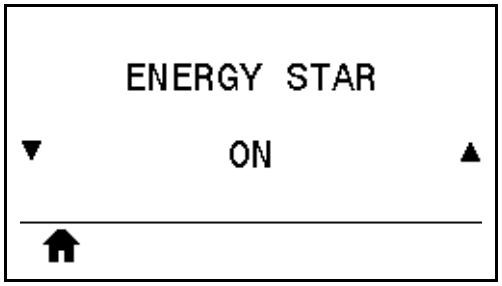

When Energy Star mode is enabled, the printer goes into a “sleep” mode after a timeout period, thereby lowering power consumption. Press any button on the control panel to bring the printer back to an active state.

Accepted values:	• ON • OFF
SGD command used:	power.energy_star.enable power.energy_star_timeout (to set the amount of idle time before Energy Star is invoked)

TOOLS > CONFIG INFO TO USB

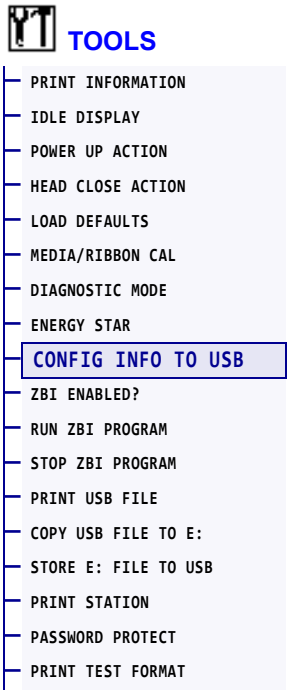

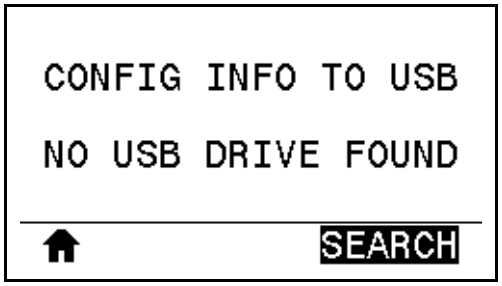

* *This menu item can be used only if a USB Flash drive is inserted into an optional USB host port on the printer.*

Use this function to copy the printer's configuration information to a USB mass storage device, such as a USB Flash drive, that is plugged into a USB host port option. This makes the information accessible without having to print physical labels. To print the information to labels, see *PRINT INFORMATION* on page 117.

Related ZPL command(s):	^HH—Returns the printer configuration information returned to the host computer.
Printer web page:	Printer Home Page > View Printer Configuration (to view printer configuration information on your web browser) View and Modify Printer Settings > Print Listings on Label (to print the configuration information on labels)

TOOLS > ZBI ENABLED?

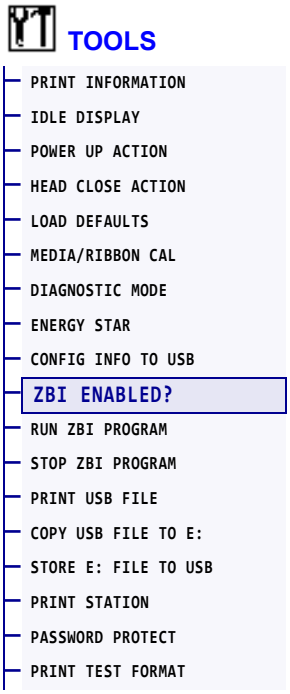

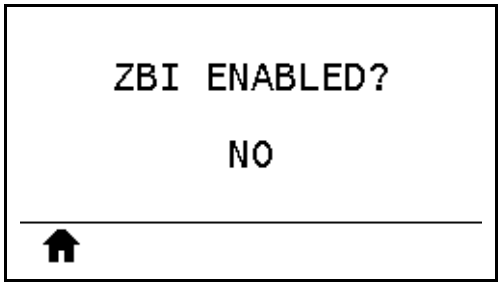

Zebra Basic Interpreter (ZBI 2.0™) is a programming option that may be purchased for your printer. If you would like to purchase this option, contact your Zebra reseller for more information.

SGD command used:	`zbi.key` (identifies if the ZBI 2.0 option is enabled or disabled on the printer)

TOOLS > RUN ZBI PROGRAM

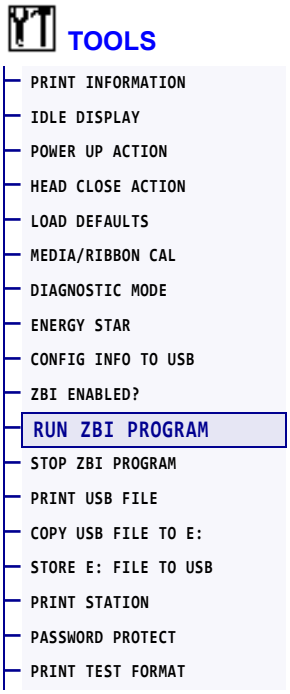

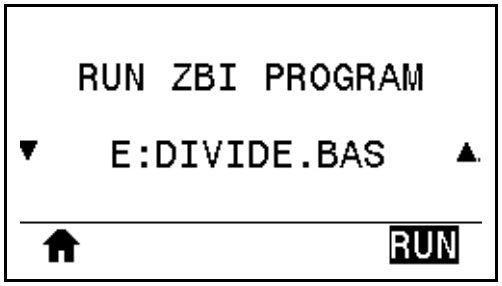

* *This menu item appears only if ZBI is enabled on your printer.*

If ZBI programs have been downloaded to your printer, you may select one to run using this menu item. If no program exists on your printer, NONE is listed.

To run a ZBI program that you have downloaded to your printer:

1. Use the UP ARROW or DOWN ARROW to select a file from this menu.
2. Press RIGHT SELECT to select **RUN**. If no program exists, the **RUN** option does not perform an action.

Related ZPL command(s):	`^JI`, `~JI`
SGD command used:	`zbi.control.run`
Printer web page:	Printer Home Page > Directory Listing

TOOLS > STOP ZBI PROGRAM

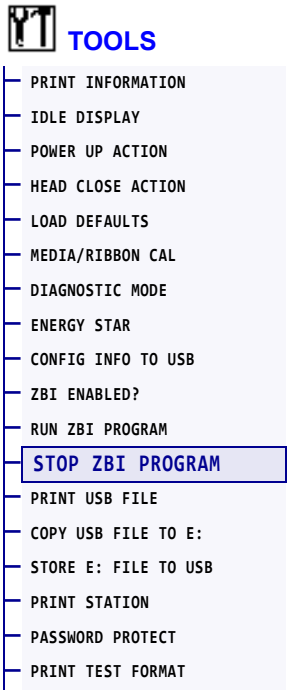

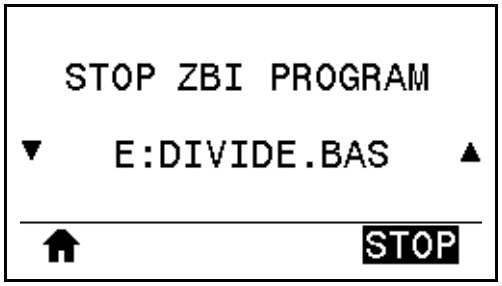

* *This menu item appears only if a ZBI program is running on your printer.*

Use this menu item to stop a ZBI program. The printer lists only programs that are running.

To stop a ZBI program:

1. If necessary, use the UP ARROW or DOWN ARROW to select the file from this menu.
2. Press RIGHT SELECT to select **STOP**.

Related ZPL command(s):	~JQ
SGD command used:	zbi.control.terminate
Printer web page:	Printer Home Page > Directory Listing

TOOLS > PRINT USB FILE

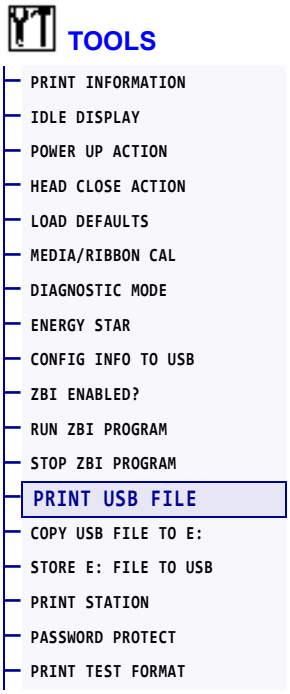

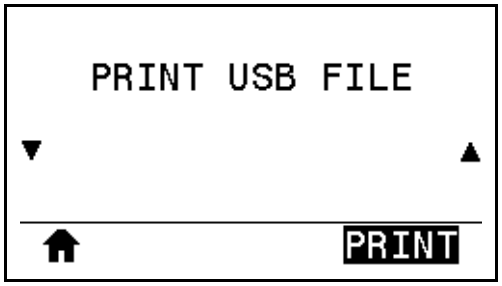

* *This menu item can be used only if a USB Flash drive is inserted into an optional USB host port on the printer.*

Select files to print from a USB Flash drive. See the exercises in *Using a USB Host Port and the NFC Capabilities* on page 247 for an exercise using this capability.

To print files from a USB Flash drive:

1. Insert a USB Flash drive into the printer's USB host port (available as an option).

   The printer lists available files. **SELECT ALL** is available to print all available files on the USB Flash drive.

2. Use the UP ARROW or DOWN ARROW to select a file from this menu.

3. Press RIGHT SELECT to select **PRINT**.

SGD command used:	`usb.host.read_list`

TOOLS > COPY USB FILE TO E:

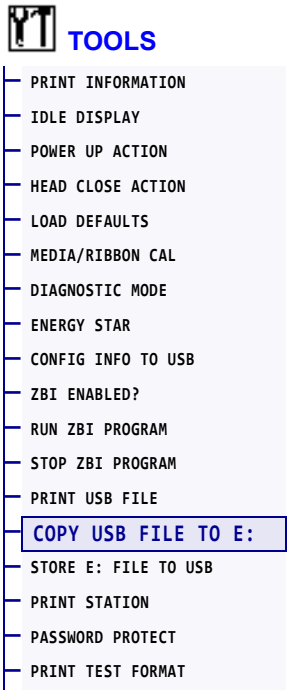

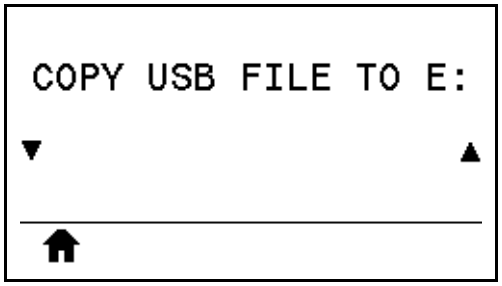

* *This menu item can be used only if a USB Flash drive is inserted into an optional USB host port on the printer.*

Select files to copy to the printer from a USB Flash drive. See the exercises in *Using a USB Host Port and the NFC Capabilities* on page 247 for an exercise using this capability.

To copy files to the printer from a USB Flash drive:

1. Insert a USB Flash drive into the printer's USB host port (available as an option).

   The printer lists available files. **SELECT ALL** is available to copy all available files from the USB Flash drive.

2. Use the UP ARROW or DOWN ARROW to select a file from this menu.

3. Press RIGHT SELECT to select **STORE**.

SGD command used:	`usb.host.read_list`

TOOLS > STORE E: FILE TO USB

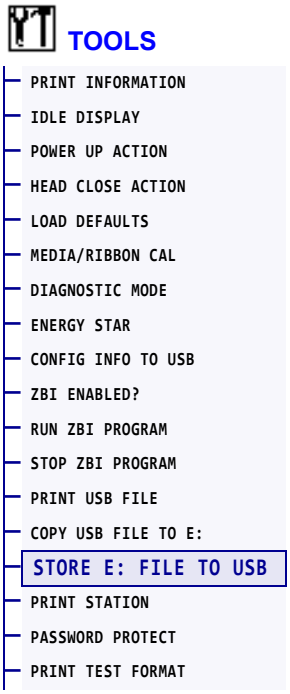

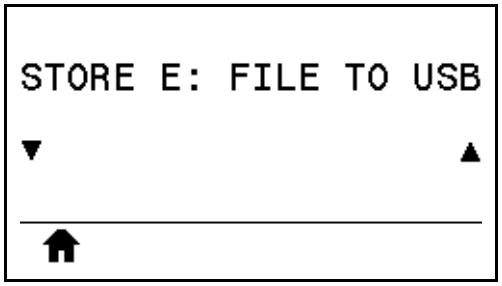

* *This menu item can be used only if a USB Flash drive is inserted into an optional USB host port on the printer.*

Select files from the printer to store on a USB Flash drive. See the exercises in *Using a USB Host Port and the NFC Capabilities* on page 247 for an exercise using this capability.

To copy files from the printer to a USB Flash drive:

1. Insert a USB Flash drive into the printer's USB host port (available as an option).

   The printer lists available files. **SELECT ALL** is available to store all files available files from the printer on the USB Flash drive.

2. Use the UP ARROW or DOWN ARROW to select a file from this menu.

3. Press RIGHT SELECT to select **STORE**.

SGD command used:	`usb.host.write_list`

TOOLS > PRINT STATION

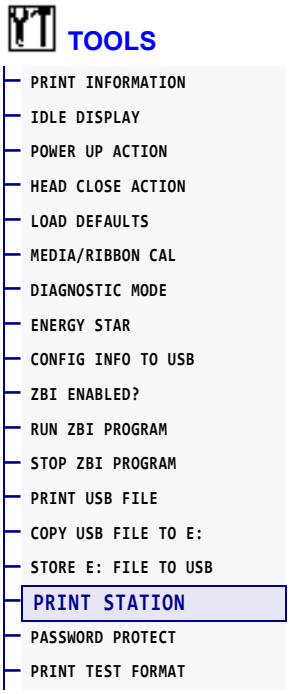

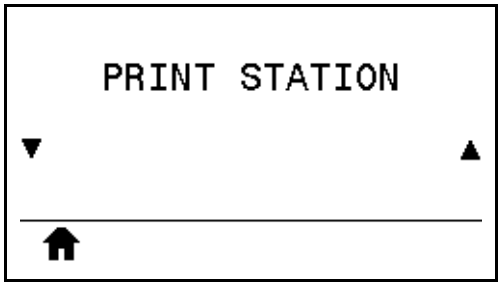

* *This menu item can be used only if a USB Flash drive is inserted into an optional USB host port on the printer.*

Use this menu item to fill in variable fields in a label format and print the label using a Human Input Device (HID), such as a USB keyboard, scale, or barcode scanner. A suitable label format must be stored on the E: drive of the printer to use this option. See the exercises in *Using a USB Host Port and the NFC Capabilities* on page 247 for an exercise using this capability.

When you plug an HID into one of the printer's USB host ports, use this user menu to select a form on the printer's E: drive. After you have been prompted to fill in each variable `^FN` field on the form, you can specify the desired quantity of labels to print.

For more information about using the `^FN` command or the SGD commands related to this feature, refer to the *Zebra Programming Guide*. You can download a copy of the manual from http://www.zebra.com/manuals/.

SGD command used:	`usb.host.keyboard_input` (must be set to ON)
	`usb.host.template_list`
	`usb.host.fn_field_list`
	`usb.host.fn_field_data`
	`usb.host.fn_last_field`
	`usb.host.template_print_amount`

TOOLS > PASSWORD PROTECT

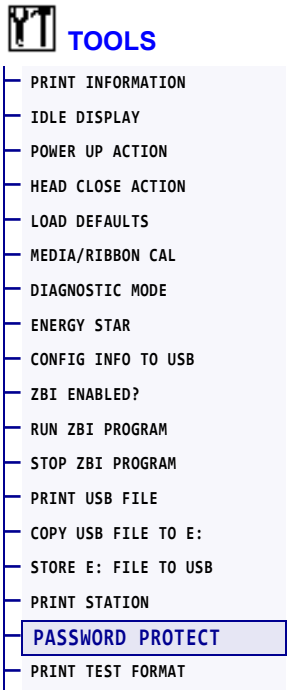

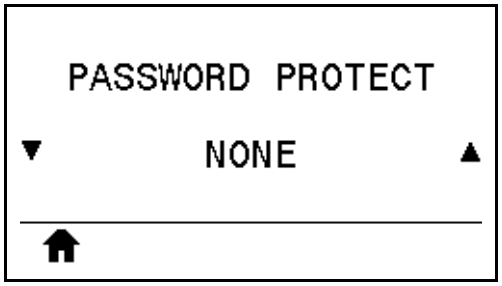

Select the level of password protection for user menu items. The default printer password is 1234.

Accepted values:	• NONE • SELECTED • ALL
Related ZPL command(s):	^KP (to change the printer password)

TOOLS > PRINT TEST FORMAT

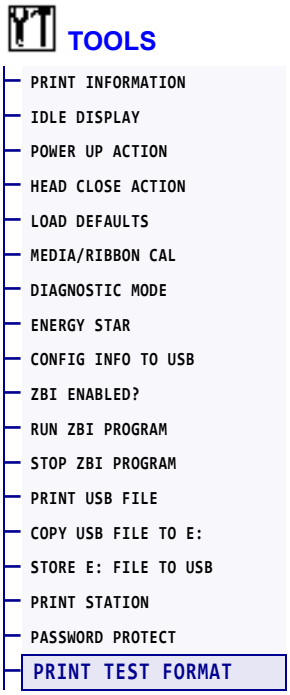

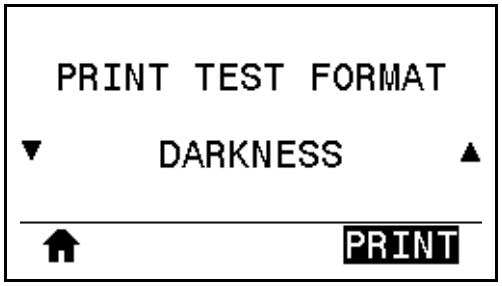

Use this menu option to initiate test sequences that print specific types of labels to help you troubleshoot printing issues. See *Print Test Format Option* on page 220 for samples of the labels and additional information.

Accepted values:	• DARKNESS—Runs a repeated image in incrementing darkness levels. • FIRST DOT LOCATION—Identifies the first dot location and label top to assist you with adjusting the position of the label. • PRINT LINE—Initiates a test sequence. See *PRINT LINE* on page 222 for details.* • IMAGE COMPRESSION—Prints an image with lines and circles to assist with issues regarding compression or stretching of an image. • ELEMENT OUT—Prints a horizontal image designed to show if a printhead element is not functioning.
SGD command used:	`print.troubleshooting_label_choices` (specifies the type of label) `print.troubleshooting_label_print` (prints the label)
Control panel key(s):	As an alternate way to initiate the PRINT LINE test sequence, reboot the printer while holding PAUSE. Hold PAUSE until the first control panel light turns off. (Formerly called a PAUSE self test.)*

* This test sequence prints a large number of labels. See *PRINT LINE* on page 222 for additional information.

NETWORK > ACTIVE PRINT SERVER

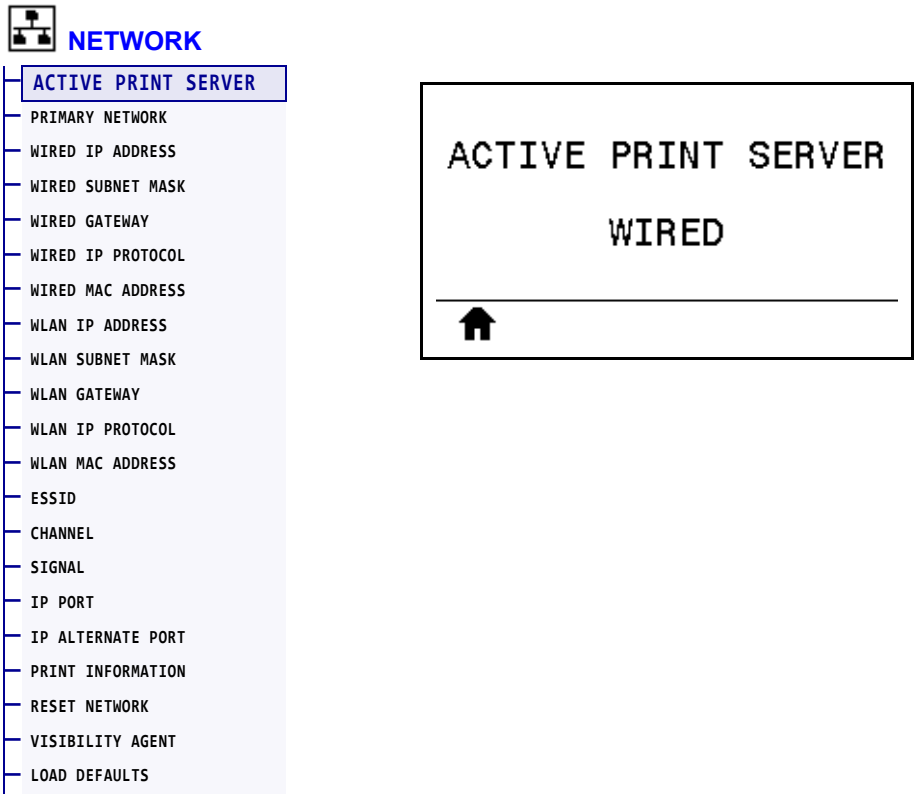

View whether the wired or wireless print server is currently active.

NETWORK > PRIMARY NETWORK

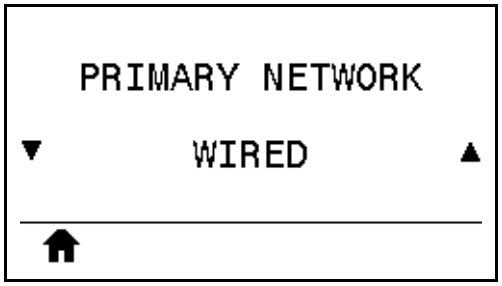

View or modify whether the wired or wireless print server is considered primary. You may select which one is primary.

NETWORK > WIRED IP ADDRESS

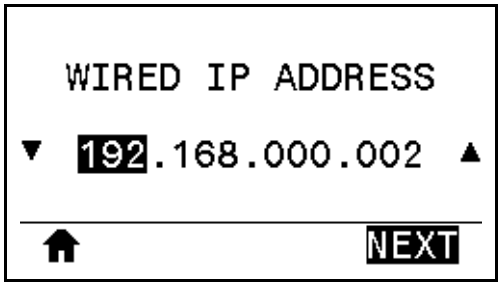

View and, if necessary, change the printer's wired IP address.

To save changes to this setting, set *WIRED IP PROTOCOL* on page 142 to PERMANENT, and then reset the print server (see *RESET NETWORK* on page 154). See *IP Address Changing* on page 244 for additional information.

Accepted values:	000 to 255 for each field
Related ZPL command(s):	^ND
SGD command used:	internal_wired.ip.addr
Printer web page:	View and Modify Printer Settings > Network Communications Setup > TCP/IP Settings

NETWORK > WIRED SUBNET MASK

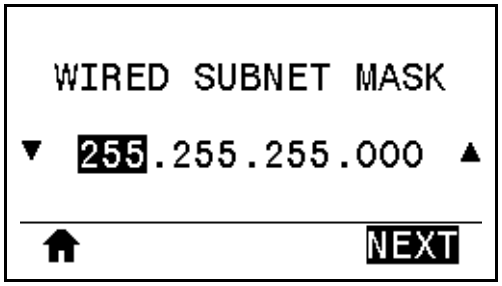

View and, if necessary, change the wired subnet mask.

To save changes to this setting, set *WIRED IP PROTOCOL* on page 142 to PERMANENT, and then reset the print server (see *RESET NETWORK* on page 154). See *IP Address Changing* on page 244 for additional information.

Accepted values:	`000` to `255` for each field
Related ZPL command(s):	`^ND`
SGD command used:	`internal_wired.ip.netmask`
Printer web page:	View and Modify Printer Settings > Network Communications Setup > TCP/IP Settings

NETWORK > WIRED GATEWAY

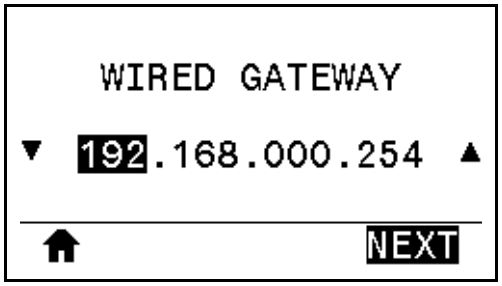

View and, if necessary, change the default wired gateway.

To save changes to this setting, set *WIRED IP PROTOCOL* on page 142 to PERMANENT, and then reset the print server (see *RESET NETWORK* on page 154). See *IP Address Changing* on page 244 for additional information.

Accepted values:	`000` to `255` for each field
Related ZPL command(s):	`^ND`
SGD command used:	`internal_wired.ip.gateway`
Printer web page:	View and Modify Printer Settings > Network Communications Setup > TCP/IP Settings

NETWORK > WIRED IP PROTOCOL

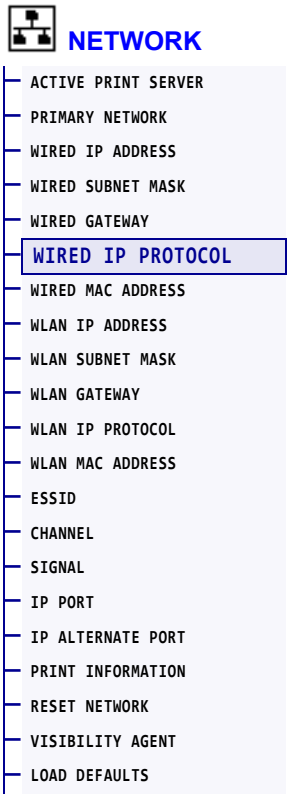

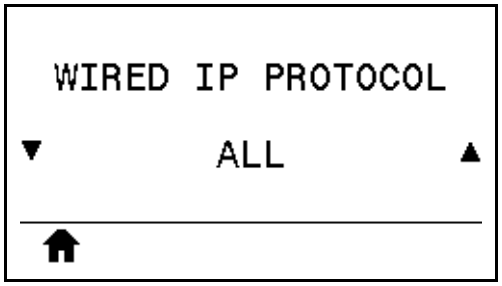

This parameter indicates if the user (permanent) or the server (dynamic) selects the wired print server's IP address. When a dynamic option is chosen, this parameter tells the method(s) by which this print server receives the IP address from the server. See *IP Address Changing* on page 244 for additional information.

Important • You must reset the print server to allow changes to the network settings to take effect.

Accepted values:	• ALL • GLEANING ONLY • RARP • BOOTP • DHCP • DHCP & BOOTP • PERMANENT
Related ZPL command(s):	^ND
SGD command used:	internal_wired.ip.protocol
Printer web page:	View and Modify Printer Settings > Network Communications Setup > TCP/IP Settings

NETWORK > WIRED MAC ADDRESS

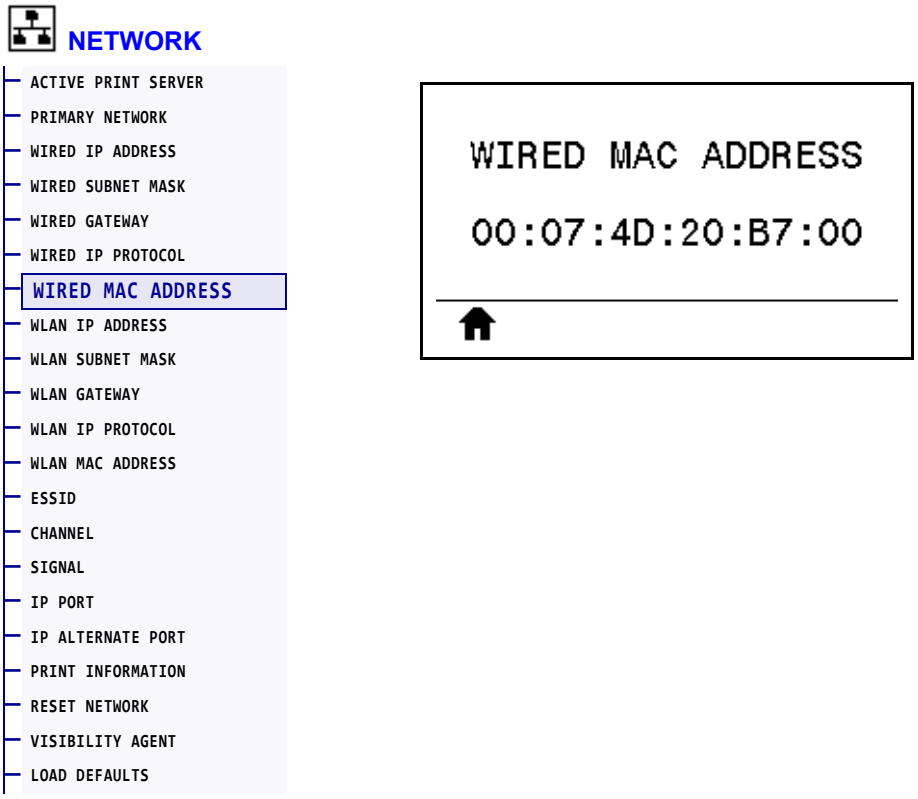

View the Media Access Control (MAC) address of the wired print server.

SGD command used:	`internal_wired.mac_addr`
Printer web page:	View and Modify Printer Settings > Network Communications Setup > TCP/IP Settings

NETWORK > WLAN IP ADDRESS

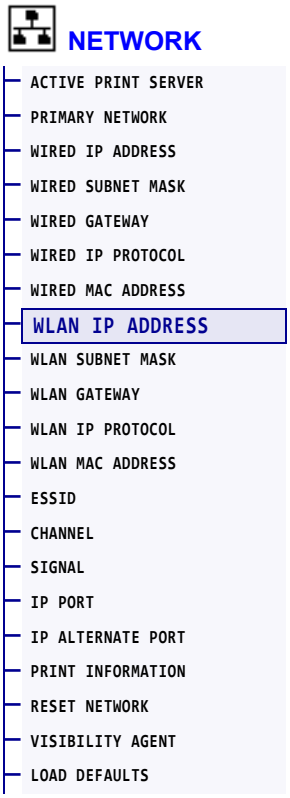

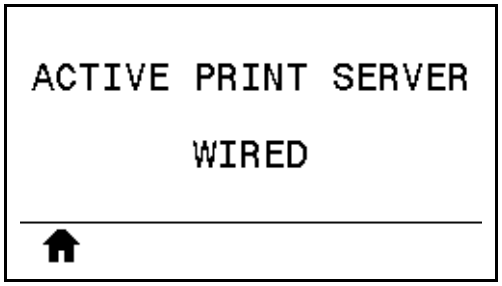

View and, if necessary, change the printer's wireless IP address.

To save changes to this setting, set *WLAN IP PROTOCOL* on page 147 to PERMANENT, and then reset the print server (see *RESET NETWORK* on page 154). See *IP Address Changing* on page 244 for additional information.

Accepted values:	`000` to `255` for each field
Related ZPL command(s):	`^ND`
SGD command used:	`ip.addr`, `wlan.ip.addr`
Printer web page:	View and Modify Printer Settings > Network Communications Setup > Wireless Setup

NETWORK > WLAN SUBNET MASK

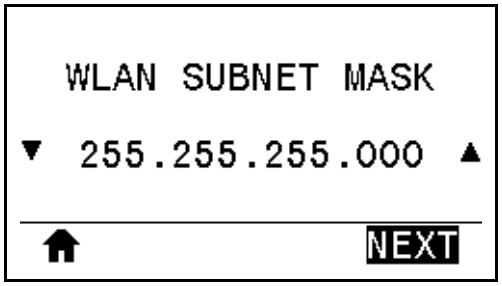

View and, if necessary, change the wireless subnet mask.

To save changes to this setting, set *WLAN IP PROTOCOL* on page 147 to PERMANENT, and then reset the print server (see *RESET NETWORK* on page 154). See *IP Address Changing* on page 244 for additional information.

Accepted values:	`000` to `255` for each field
Related ZPL command(s):	`^ND`
SGD command used:	`wlan.ip.netmask`
Printer web page:	View and Modify Printer Settings > Network Communications Setup > Wireless Setup

NETWORK > WLAN GATEWAY

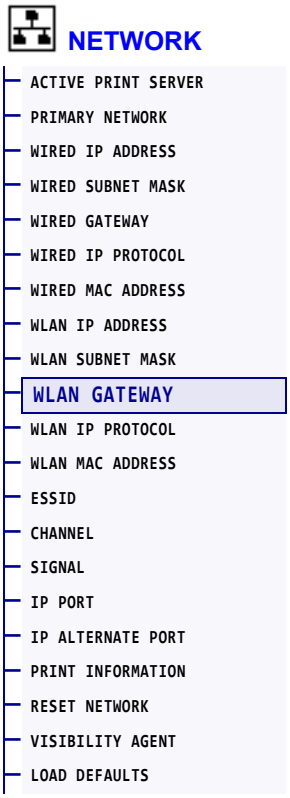

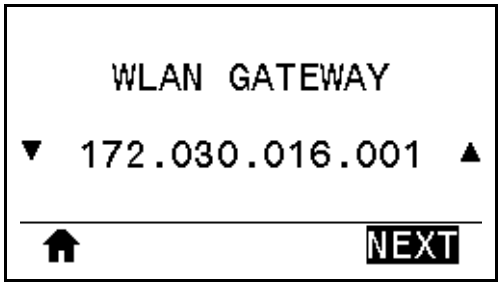

View and, if necessary, change the default wireless gateway.

To save changes to this setting, set *WLAN IP PROTOCOL* on page 147 to PERMANENT, and then reset the print server (see *RESET NETWORK* on page 154). See *IP Address Changing* on page 244 for additional information.

Accepted values:	`000` to `255` for each field
Related ZPL command(s):	`^ND`
SGD command used:	`wlan.ip.gateway`
Printer web page:	View and Modify Printer Settings > Network Communications Setup > Wireless Setup

NETWORK > WLAN IP PROTOCOL

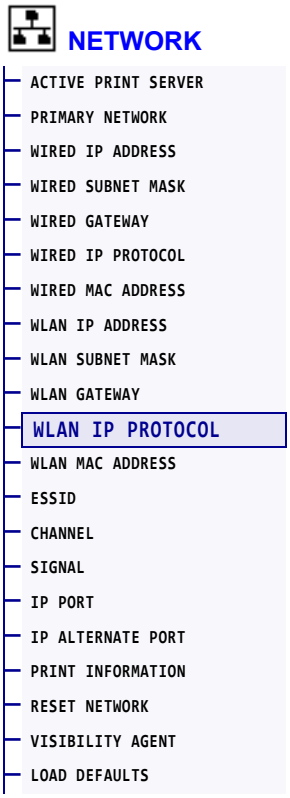

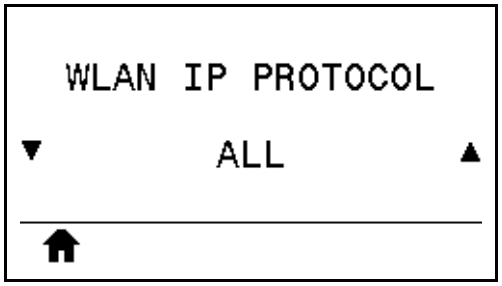

This parameter indicates if the user (permanent) or the server (dynamic) selects the wireless print server's IP address. When a dynamic option is chosen, this parameter tells the method(s) by which this print server receives the IP address from the server. See *IP Address Changing* on page 244 for additional information.

Important • You must reset the print server to allow changes to the network settings to take effect.

Accepted values:	• ALL • GLEANING ONLY • RARP • BOOTP • DHCP • DHCP & BOOTP • PERMANENT
Related ZPL command(s):	^ND
SGD command used:	wlan.ip.protocol
Printer web page:	View and Modify Printer Settings > Network Communications Setup > Wireless Setup

NETWORK > WLAN MAC ADDRESS

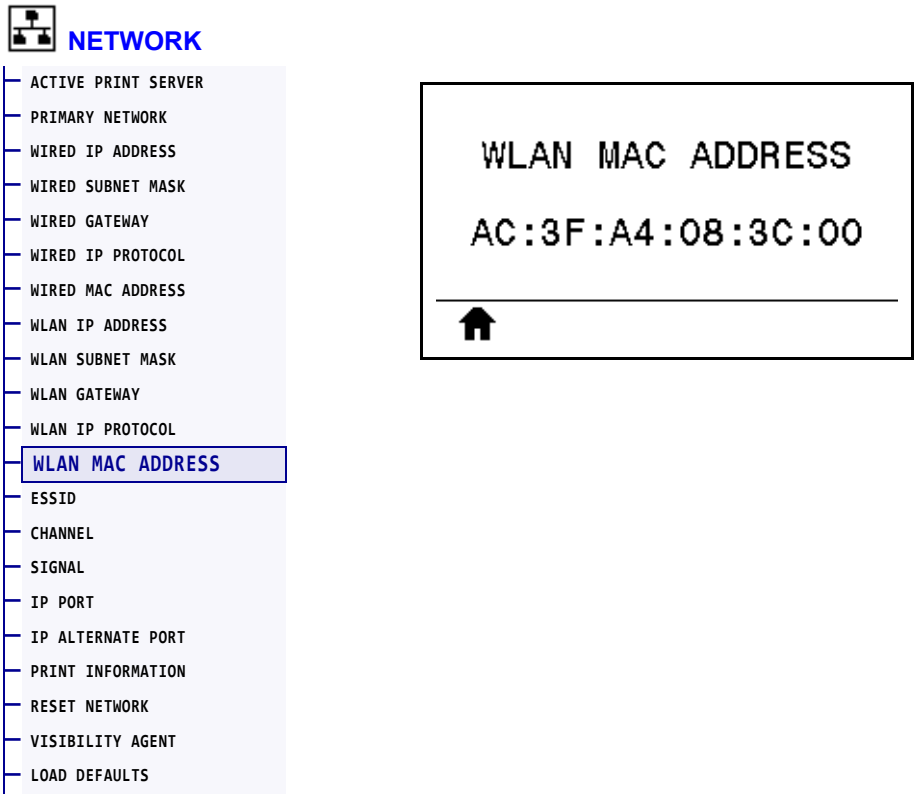

View the Media Access Control (MAC) address of the wireless print server.

SGD command used:	`wlan.mac_addr`
Printer web page:	View and Modify Printer Settings > Network Communications Setup > Wireless Setup

NETWORK > ESSID

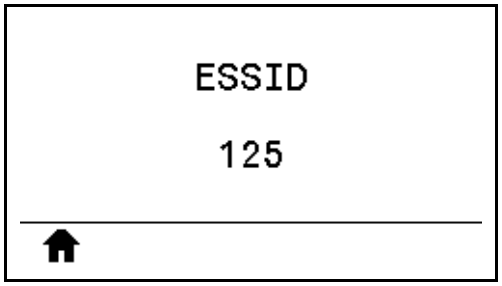

The Extended Service Set Identification (ESSID) is an identifier for your wireless network. This setting, which cannot be modified from the control panel, gives the ESSID for the current wireless configuration.

Accepted values:	32-character alphanumeric string (default `125`)
SGD command used:	`wlan.essid`
Printer web page:	View and Modify Printer Settings > Network Communications Setup > Wireless Setup

NETWORK > CHANNEL

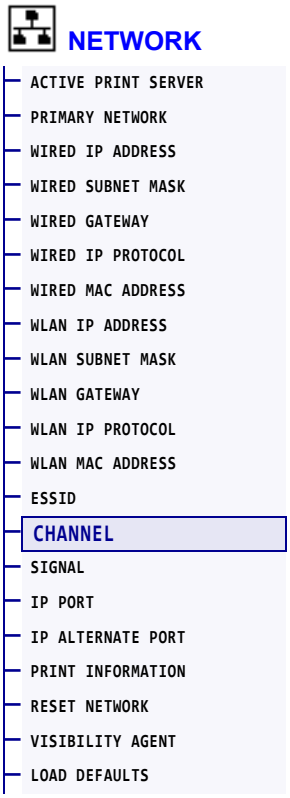

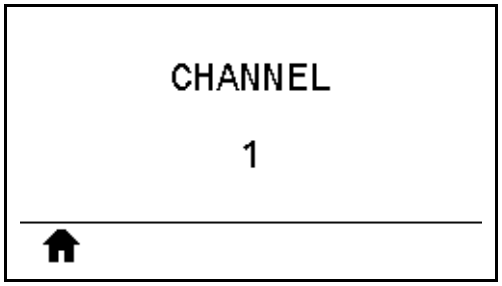

View the wireless channel being used when the wireless network is active and authenticated.

SGD command used:	`wlan.channel`
Printer web page:	View and Modify Printer Settings > Network Communications Setup > Wireless Setup

NETWORK > SIGNAL

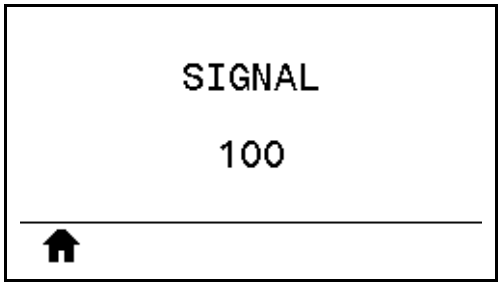

View the wireless signal strength when the wireless network is active and authenticated.

SGD command used:	`wlan.signal_strength`
Printer web page:	View and Modify Printer Settings > Network Communications Setup > Wireless Setup

NETWORK > IP PORT

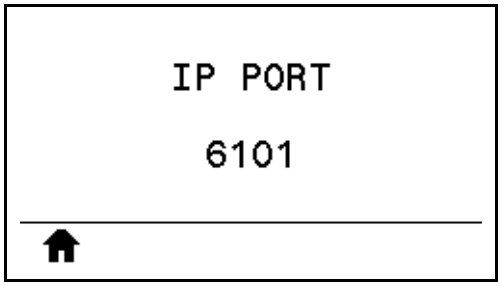

This printer setting refers to the internal wired print servers port number that the TCP print service is listening on. Normal TCP communications from the host should be directed to this port.

SGD command used:	`internal_wired.ip.port`
Printer web page:	View and Modify Printer Settings > Network Communications Setup > TCP/IP Settings

NETWORK > IP ALTERNATE PORT

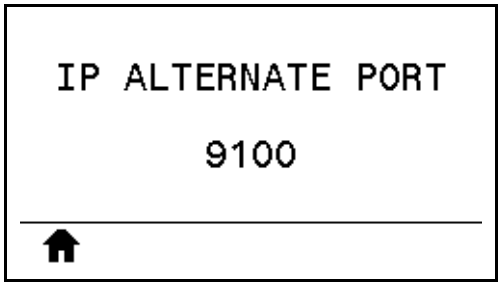

This command sets the port number of the alternate TCP port.

Note • Print servers supporting this command will monitor both the primary port and the alternate port for connections at the same time.

SGD command used:	`internal_wired.ip.port_alternate`
Printer web page:	View and Modify Printer Settings > Network Communications Setup > TCP/IP Settings

NETWORK > RESET NETWORK

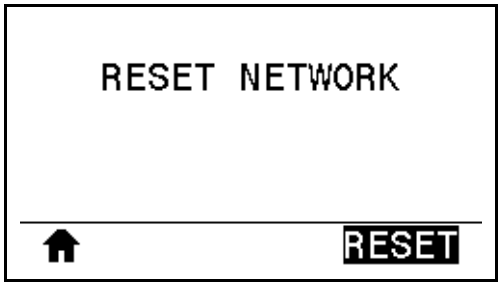

This option resets the wired or wireless print server and saves any changes that you made to any network settings.

Important • You must reset the print server to allow changes to the network settings to take effect.

Related ZPL command(s):	~WR
SGD command used:	device.reset
Printer web page:	Print Server Settings > Reset Print Server

NETWORK > VISIBILITY AGENT

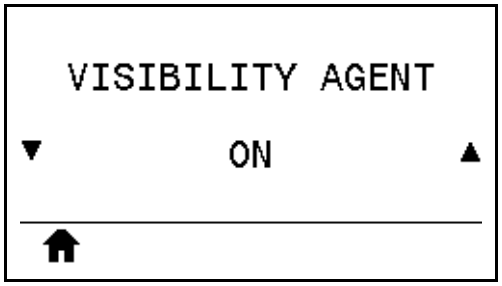

When the printer is connected to a wired or wireless network, it will attempt to connect to Zebra's Asset Visibility Service via the Cloud-based Zebra Printer Connector using an encrypted, certificate-authenticated web socket connection. The printer sends Discovery Data and Settings and Alerts Data. Data printed via any label formats is NOT transmitted.

To opt out of this feature, disable this setting. For more information, see the "Opting Out of the Asset Visibility Agent" application note at http://www.zebra.com.

Accepted values:	• ON • OFF
SGD command used:	`weblink.zebra_connector.enable`
Printer web page:	View and Modify Printer Settings > Network Configuration > Cloud Connect Settings

LANGUAGE > LANGUAGE

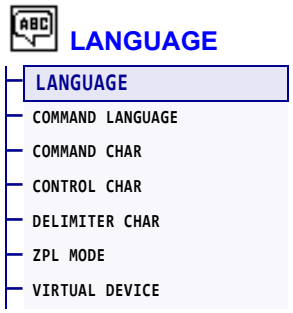

If necessary, change the language that the printer displays. This change affects the words shown on the following:

- the Home menu
- the user menus
- error messages
- the printer configuration label, the network configuration label, and other labels that you can select to print through the user menus

Accepted values:	ENGLISH, SPANISH, FRENCH, GERMAN, ITALIAN, NORWEGIAN, PORTUGUESE, SWEDISH, DANISH, SPANISH 2, DUTCH, FINNISH, CZECH, JAPANESE, KOREAN, ROMANIAN, RUSSIAN, POLISH, SIMPLIFIED CHINESE, TRADITIONAL CHINESE **Note •** The selections for this parameter are displayed in the actual languages to make it easier for you to find one that you are able to read.
Related ZPL command(s):	^KL
SGD command used:	display.language
Printer web page:	View and Modify Printer Settings > General Setup > Language

LANGUAGE > COMMAND LANGUAGE

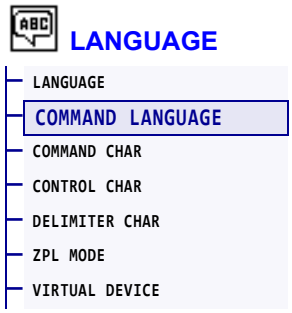

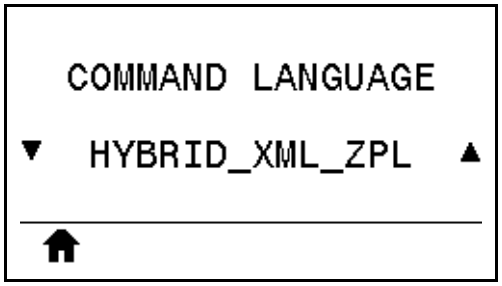

View or select the appropriate command language.

LANGUAGE > COMMAND CHAR

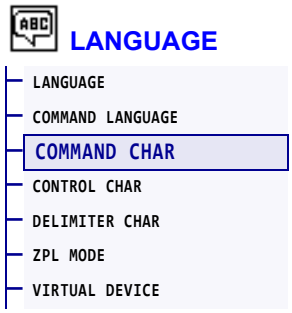

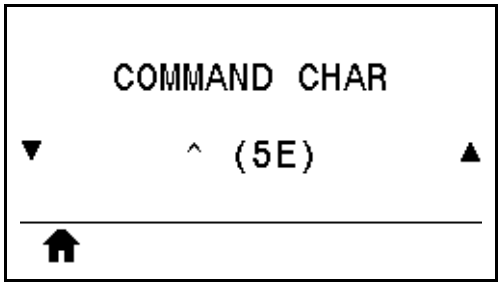

The format command prefix is a two-digit hex value used as a parameter place marker in ZPL/ZPL II format instructions. The printer looks for this hex character to indicate the start of a ZPL/ZPL II format instruction.

Set the format command character to match what is used in your label formats.

Important • You cannot use the same hex value for the format command prefix, control character, and delimiter characters. The printer must see different characters to work properly. If you are setting the value through the control panel, the printer will skip any value that is already in use.

Accepted values:	`00` to `FF`
Related ZPL command(s):	`^CC` or `~CC`
SGD command used:	`zpl.caret`
Printer web page:	View and Modify Printer Settings > ZPL Control

LANGUAGE > CONTROL CHAR

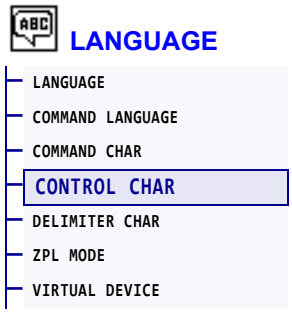

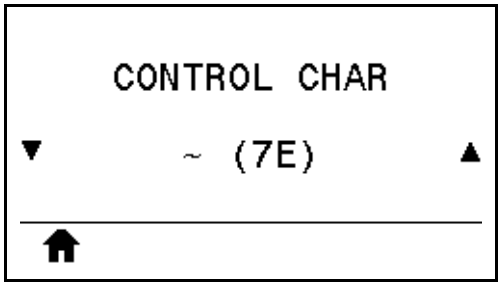

The printer looks for this two-digit hex character to indicate the start of a ZPL/ZPL II control instruction. Set the control prefix character to match what is used in your label formats.

Accepted values:	`00` to `FF`
Related ZPL command(s):	`^CT` or `~CT`
SGD command used:	`zpl.control_character`
Printer web page:	View and Modify Printer Settings > ZPL Control

LANGUAGE > DELIMITER CHAR

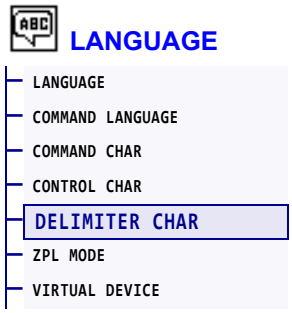

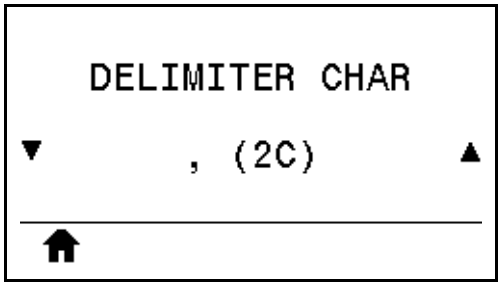

The delimiter character is a two-digit hex value used as a parameter place marker in ZPL/ZPL II format instructions. Set the delimiter character to match what is used in your label formats.

Accepted values:	`00` to `FF`
Related ZPL command(s):	`^CD` or `~CD`
SGD command used:	`zpl.delimiter`
Printer web page:	View and Modify Printer Settings > ZPL Control

LANGUAGE > ZPL MODE

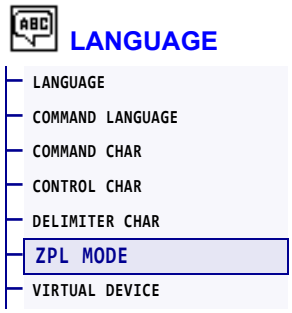

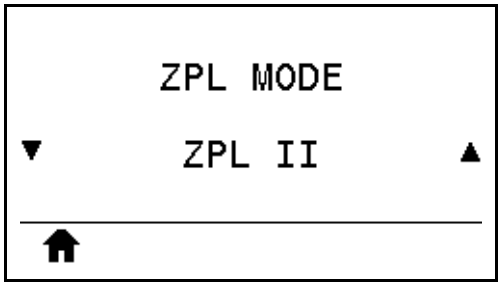

Select the mode that matches what is used in your label formats. This printer accepts label formats written in either ZPL or ZPL II, eliminating the need to rewrite any ZPL formats that already exist. The printer remains in the selected mode until it is changed in one of the ways listed here.

Accepted values:	• `ZPL II` • `ZPL`
Related ZPL command(s):	`^SZ`
SGD command used:	`zpl.zpl_mode`
Printer web page:	View and Modify Printer Settings > ZPL Control

LANGUAGE > VIRTUAL DEVICE

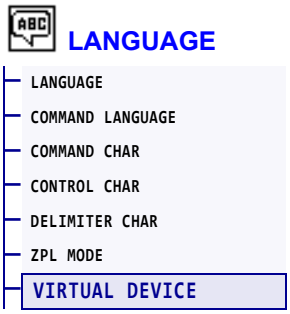

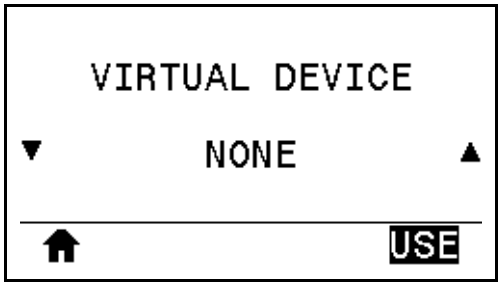

If any Virtual Device apps are installed on your printer, you may view or enable/disable them from this user menu. For more information about Virtual Devices, go to the User Guide for the appropriate Virtual Device, or contact your local reseller.

SENSORS > SENSOR TYPE

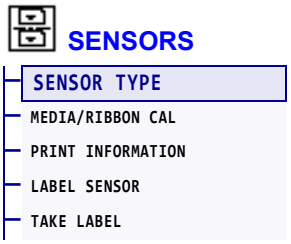

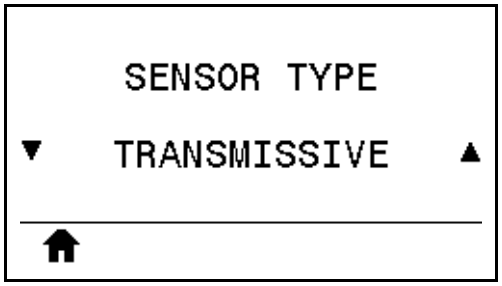

Select the media sensor that is appropriate for the media that you are using. The reflective sensor typically is used only for black mark media. The transmissive sensor typically is used for other media types.

Accepted values:	• TRANSMISSIVE • REFLECTIVE
Related ZPL command(s):	^JS
SGD command used:	device.sensor_select
Printer web page:	View and Modify Printer Settings > Media Setup

SENSORS > LABEL SENSOR

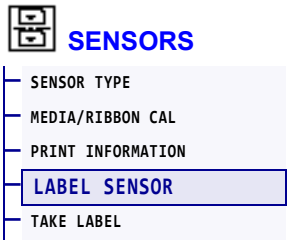

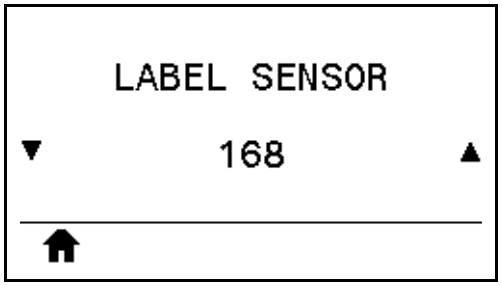

Set the sensitivity of the label sensor.

Important • This value is set during sensor calibration. Do not change this setting unless you are told to do so by Zebra Technical Support or by an authorized service technician.

Accepted values:	`0` to `255`
SGD command used:	`ezpl.label_sensor`
Printer web page:	View and Modify Printer Settings > Calibration

SENSORS > TAKE LABEL

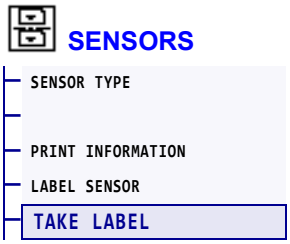

Set the intensity of the take label LED.

Important • This value is set during sensor calibration. Do not change this setting unless you are told to do so by Zebra Technical Support or by an authorized service technician.

Accepted values:	`0` to `255`
SGD command used:	`ezpl.take_label`
Printer web page:	View and Modify Printer Settings > Calibration

PORTS > BAUD RATE

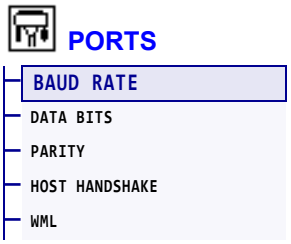

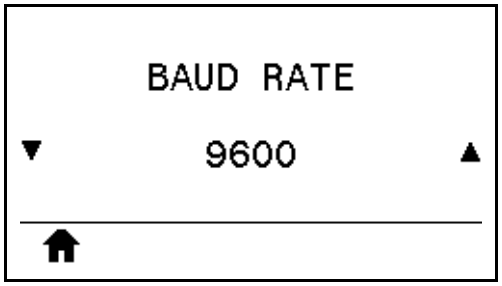

Select the baud value that matches the one being used by the host computer.

Accepted values:	• 115200 • 57600 • 38400 • 28800 • 19200 • 14400 • 9600 • 4800
Related ZPL command(s):	^SC
SGD command used:	comm.baud
Printer web page:	View and Modify Printer Settings > Serial Communications Setup

PORTS > DATA BITS

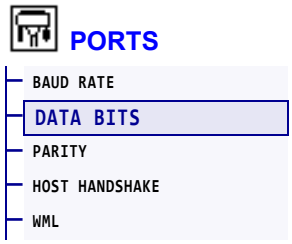

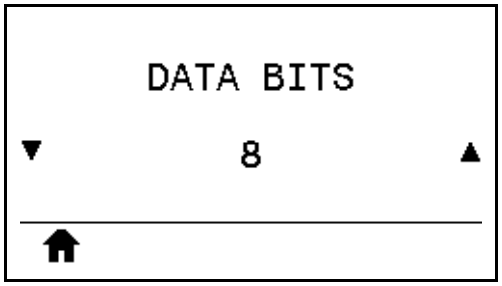

Select the data bits value that matches the one being used by the host computer.

Accepted values:	7 or 8
Related ZPL command(s):	^SC
SGD command used:	comm.data_bits
Printer web page:	View and Modify Printer Settings > Serial Communications Setup

PORTS > PARITY

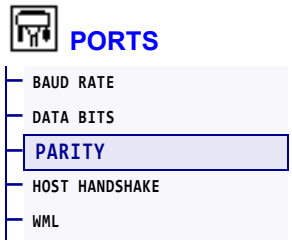

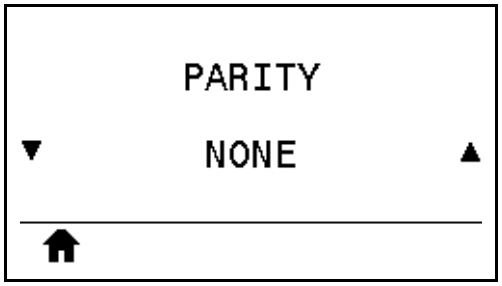

Select the parity value that matches the one being used by the host computer.

Accepted values:	• NONE • EVEN • ODD
Related ZPL command(s):	^SC
SGD command used:	comm.parity
Printer web page:	View and Modify Printer Settings > Serial Communications Setup

PORTS > HOST HANDSHAKE

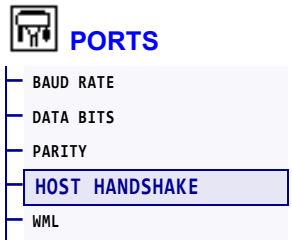

Select the handshake protocol that matches the one being used by the host computer.

Accepted values:	• XON/XOFF • RTS/CTS • DSR/DTR
Related ZPL command(s):	^SC
SGD command used:	comm.handshake
Printer web page:	View and Modify Printer Settings > Serial Communications Setup

PORTS > WML

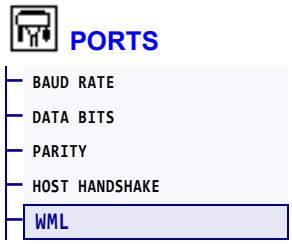

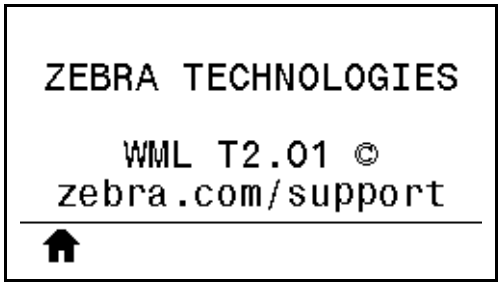

View the Wireless Markup Language (WML) version. This value cannot be changed.

BLUETOOTH > BLUETOOTH ADDRESS

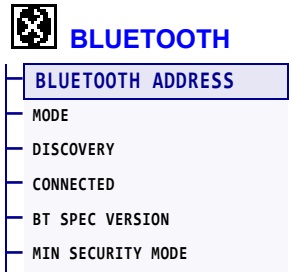

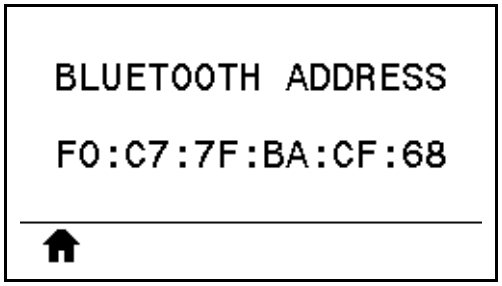

View the printer's Bluetooth Device Address

SGD command used:	`bluetooth.address`

BLUETOOTH > MODE

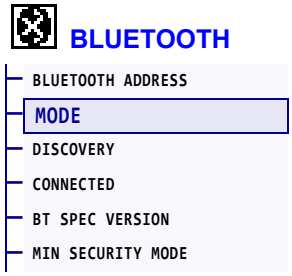

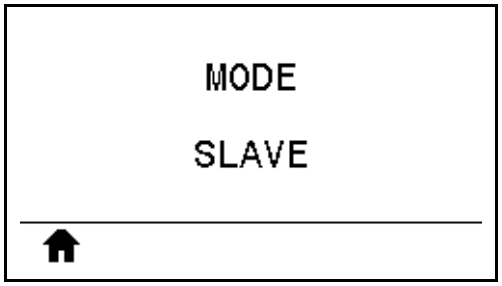

View the Bluetooth connection pair printer's device type—Slave (typical) or Master.

BLUETOOTH > DISCOVERY

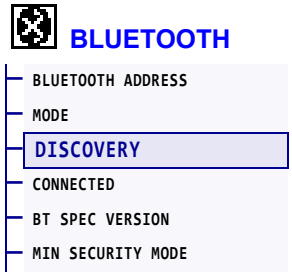

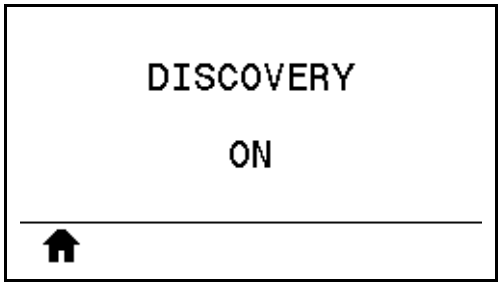

Select if the printer is “Discoverable” for Bluetooth device pairing.

Accepted values:	• `ON`—Enables Bluetooth discoverable mode. • `OFF`—Disables Bluetooth discoverable mode.
SGD command used:	`bluetooth.discoverable`

BLUETOOTH > CONNECTED

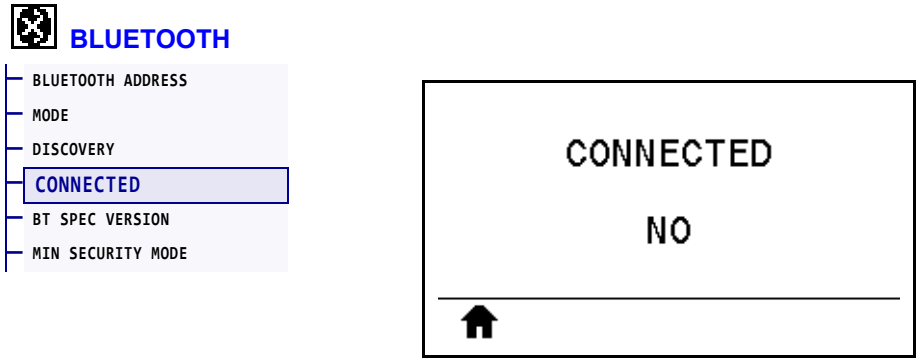

View the Bluetooth connection status to its paired device (Yes or No).

BLUETOOTH > BT SPEC VERSION

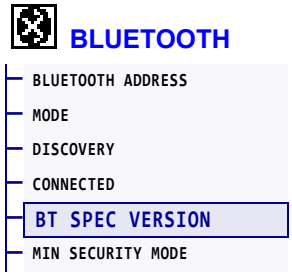

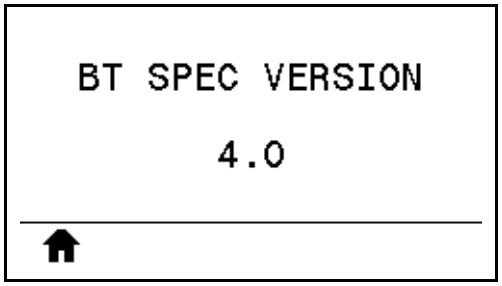

View the Bluetooth operational specification level.

SGD command used:	`bluetooth.radio_version`

BLUETOOTH > MIN SECURITY MODE

View the printer’s Bluetooth minimum level of applied security.

Calibrate the Ribbon and Media Sensors

Use the procedure in this section to calibrate the printer, which adjusts the sensitivity of the media and ribbon sensors. For a summary of the options for initiating calibration, see *MEDIA/RIBBON CAL* on page 124.

Important • Follow the calibration procedure exactly as presented. All of the steps must be performed even if only one of the sensors requires adjustment. You may press and hold CANCEL at any step in this procedure to cancel the process.

To perform sensor calibration, complete these steps:

1. With the printer in the Ready state, initiate media and ribbon calibration in one of these ways:
   - Press and hold PAUSE + CANCEL for 2 seconds.
   - Send the `ezpl.manual_calibration` SGD command to the printer. See the *Zebra Programming Guide* for more information about this command.
   - Navigate to the following menu item on the control panel display. This item is located under the TOOLS menu and the SENSORS menu. Press RIGHT SELECT to select START.

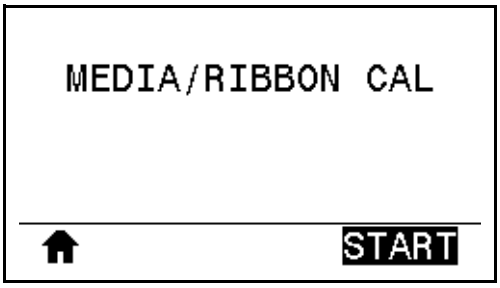

The printer does the following:

- The **STATUS light** and **SUPPLIES light** flash yellow once.
- The **PAUSE light** blinks yellow.
- The control panel displays:

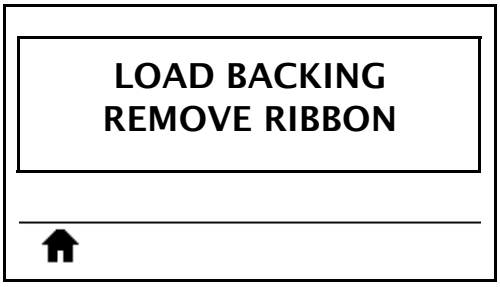

2. **Caution •** The printhead may be hot and could cause severe burns. Allow the printhead to cool.

   Open the printhead assembly by rotating the printhead-open lever upward.

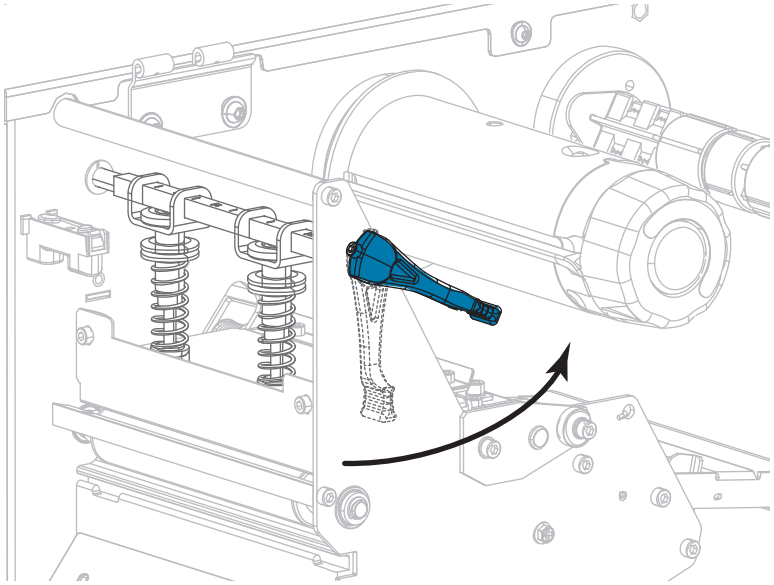

3. Extend the media approximately 8 in. (203 mm) out of the printer.

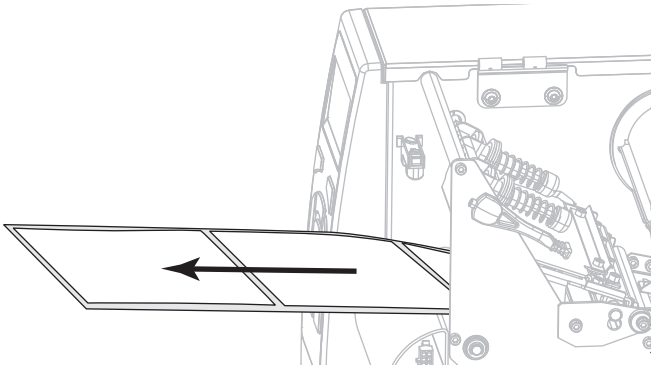

4. Remove the exposed labels so that only the liner remains.

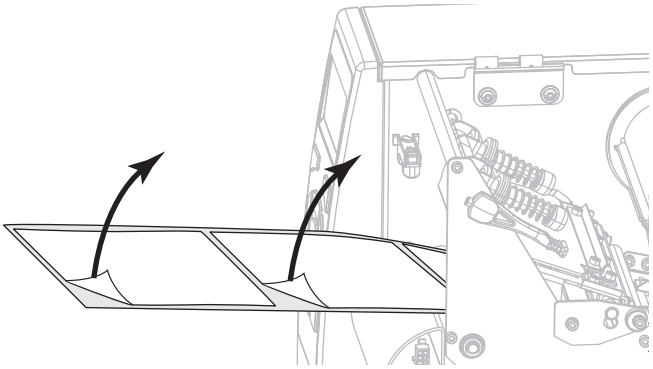

5. Pull the media into the printer so that only the backing is in the sensor.

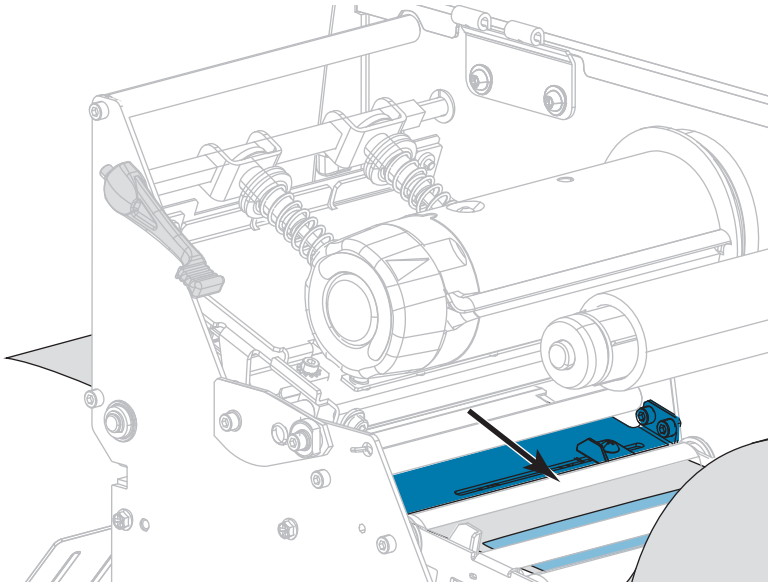

6. Remove the ribbon (if used).

7. Rotate the printhead-open lever downward until it locks the printhead in place.

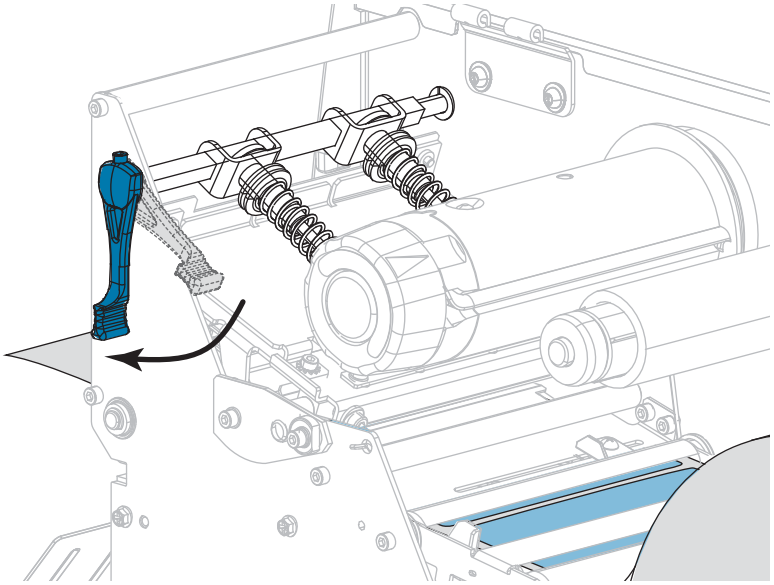

8. Press PAUSE to begin the media calibration process.
   - The **PAUSE light** turns off.
   - The **SUPPLIES light** flashes.
   - The control panel displays:

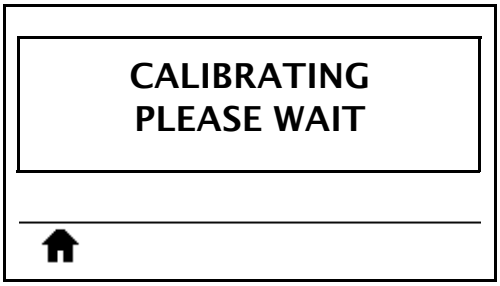

When the process is complete:

- The **SUPPLIES light** stops flashing.
- The **PAUSE light** flashes yellow.
- The control panel displays:

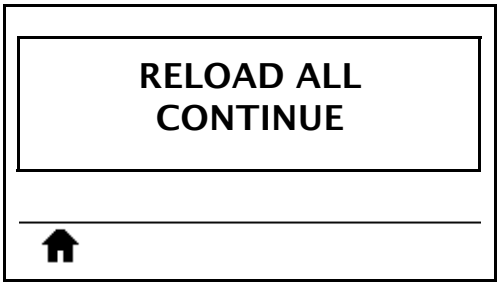

9. Open the printhead assembly by rotating the printhead-open lever upward.

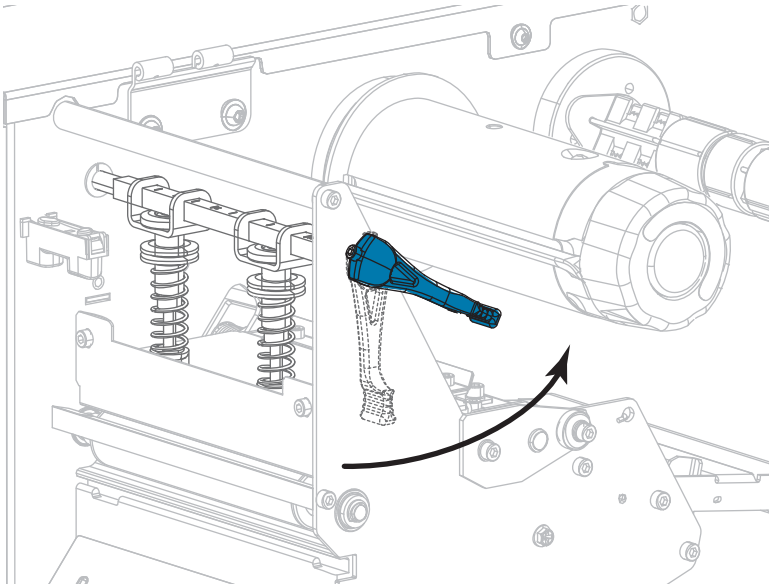

10. Pull the media forward until a label is positioned under the media sensors.

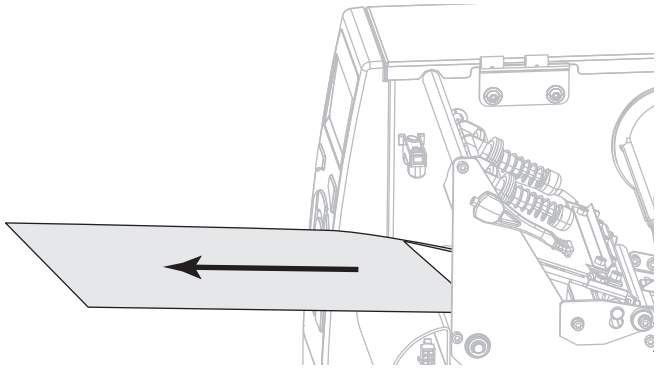

11. Reload the ribbon (if used).

12. Rotate the printhead-open lever downward until it locks the printhead in place.

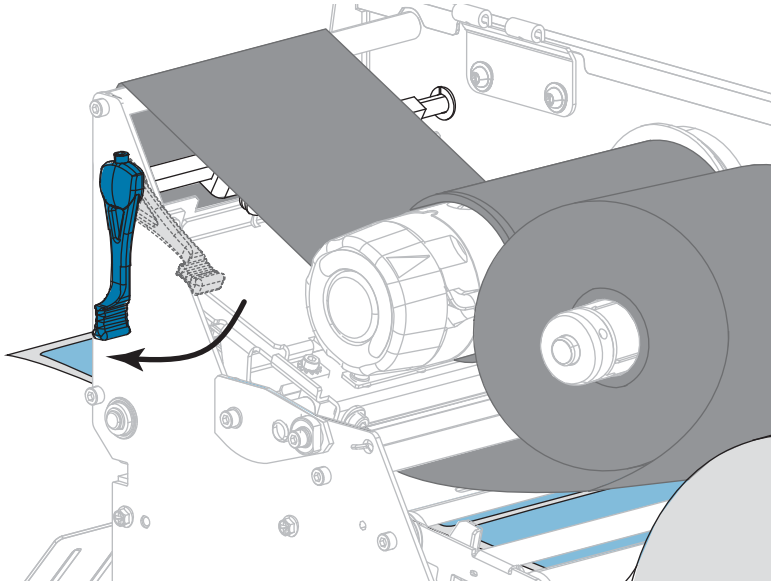

13. Close the media door.

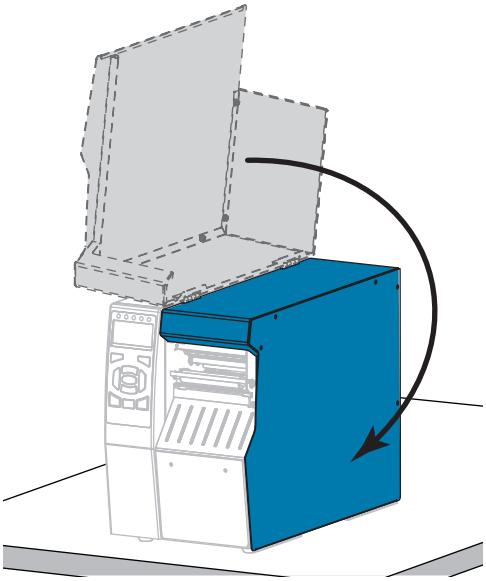

14. Press PAUSE to enable printing.

Adjust the Printhead Pressure and Toggle Position

The printhead pressure toggles (Figure 17) can be adjusted to create more or less pressure, as needed. They can also be moved from side to side to adjust the pressure in certain areas. Use the lowest printhead pressure necessary to produce good print quality. Higher pressures may cause premature wear on the printhead elements.

If the toggles are not positioned correctly or adjusted to apply the correct pressure, the following types of issues may result:

- media and ribbon may slip
- ribbon may wrinkle
- media may move from side to side during printing
- printing may be too light or too dark on one side of the media

Figure 17 • Printhead Pressure Toggles

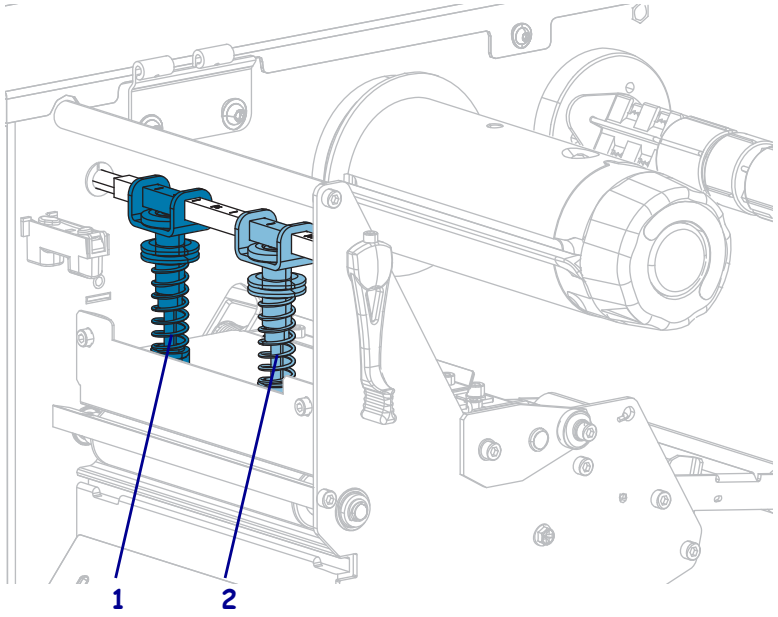

1	Inside toggle
2	Outside toggle

Toggle Position Adjustment

To adjust the printhead toggle positions, complete these steps:

1. Rotate the printhead-open lever upward to lessen the pressure on the toggles.

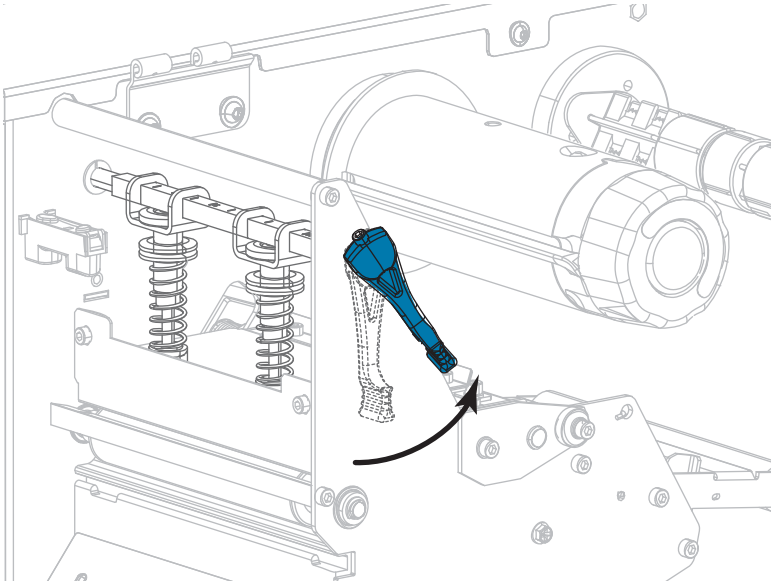

2. Loosen the locking nut at the top of the toggle to be moved.

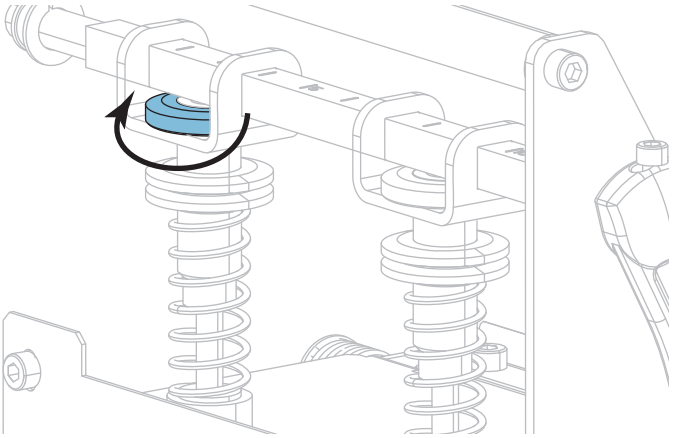

3. Reposition the toggle as necessary to provide even pressure on the media. For extremely narrow media, position the inside toggle over the center of the media, and decrease the pressure on the outside toggle.

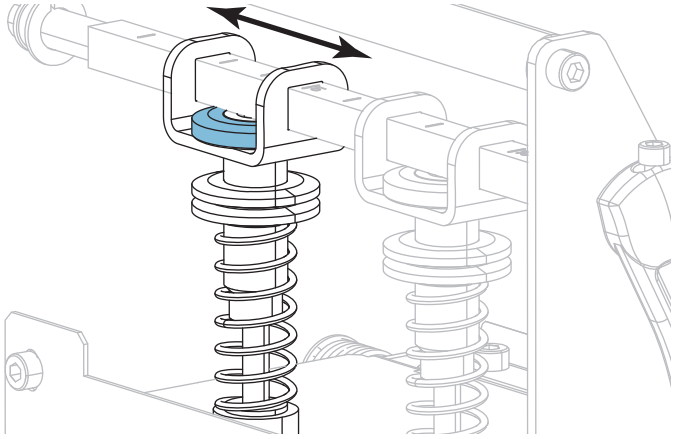

4. Tighten the locking nut.

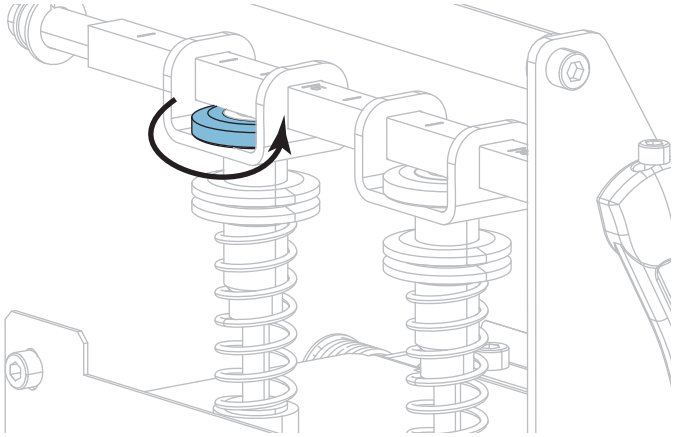

Printhead Pressure Adjustment

If positioning the toggles properly does not solve a print quality or other issue, try adjusting the printhead pressure. Maximize printhead life by using the lowest pressure that produces the desired print quality.

Perform this procedure if you are experiencing any of the following:

- The media requires higher pressure overall to print well
- The media requires lower pressure overall to print well
- The prints is too light on the left side of the label.
- The print is too light on the right side of the label.
- The media shifts left while printing
- The media shifts right while printing

If none of these issues exist, do not continue with this procedure.

To adjust printhead pressure, complete these steps:

1. Equally space the toggles across the width of the media.
2. Measure the distance from the top of the toggle foot (**1**) to the bottom of the lower knurled nut (**2**). If the measurement is not 1-3/16 in. (30 mm), loosen the upper knurled nut (**3**) and adjust the lower knurled nut until the distance is correct.

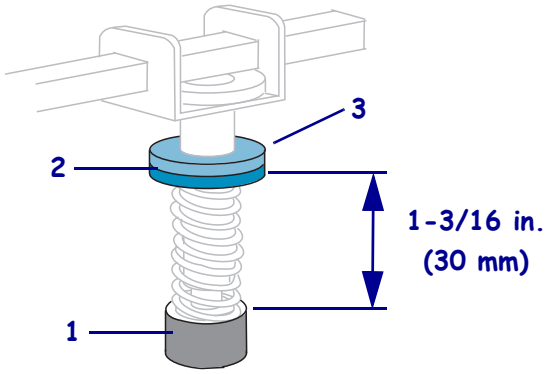

3. Initiate the PRINT LINE option of *PRINT TEST FORMAT* on page 136.
4. While printing labels, use the control panel to lower the darkness setting until the labels are printing gray instead of black. (See *DARKNESS* on page 106.)

5. Which of the following issues are you experiencing?

If the media...	Then...
Requires higher pressure overall to print well	Increase the pressure on both toggles.
Requires lower pressure overall to print well	Decrease the pressure on both toggles.
Prints too lightly on the left side of the label.	Increase the pressure on the inside toggle.
Prints too lightly on the right side of the label.	Increase the pressure on the outside toggle.
Shifts left while printing	Increase the pressure on the outside toggle. OR Decrease the pressure on the inside toggle.
Shifts right while printing	Increase the pressure on the inside toggle. OR Decrease the pressure on the outside toggle.

Note • To increase toggle pressure, loosen the upper knurled nut and adjust the lower knurled nut downward. To decrease printhead pressure, loosen the upper knurled nut and adjust the lower knurled nut upward.

6. Lock the toggle pressure by tightening the upper knurled nut against the lower knurled nut.
7. Reposition the toggles for printing.
8. If necessary, reinitiate the PRINT LINE option of *PRINT TEST FORMAT* on page 136.
9. While printing labels, use the control panel to raise the darkness setting until the labels are again printing black instead of gray. (See *DARKNESS* on page 106.)
10. Check the print quality, and if necessary, repeat this procedure until the printhead pressure is adequate.

Adjust the Transmissive Media Sensors

The transmissive media sensor assembly consists of two parts. The media passes between the two parts.

Adjust these sensors only when the printer cannot detect the top of the labels. In this situation, the printer displays MEDIA OUT - LOAD MEDIA even though there are labels loaded in the printer. For non-continuous media with a notch or hole in the media, the sensor must be positioned directly above the notch or hole.

To reposition the media sensors, complete these steps:

1. Remove the ribbon (if ribbon is used).
2. Locate the upper media sensor. The upper media sensor eye is directly below the adjustment screw head.

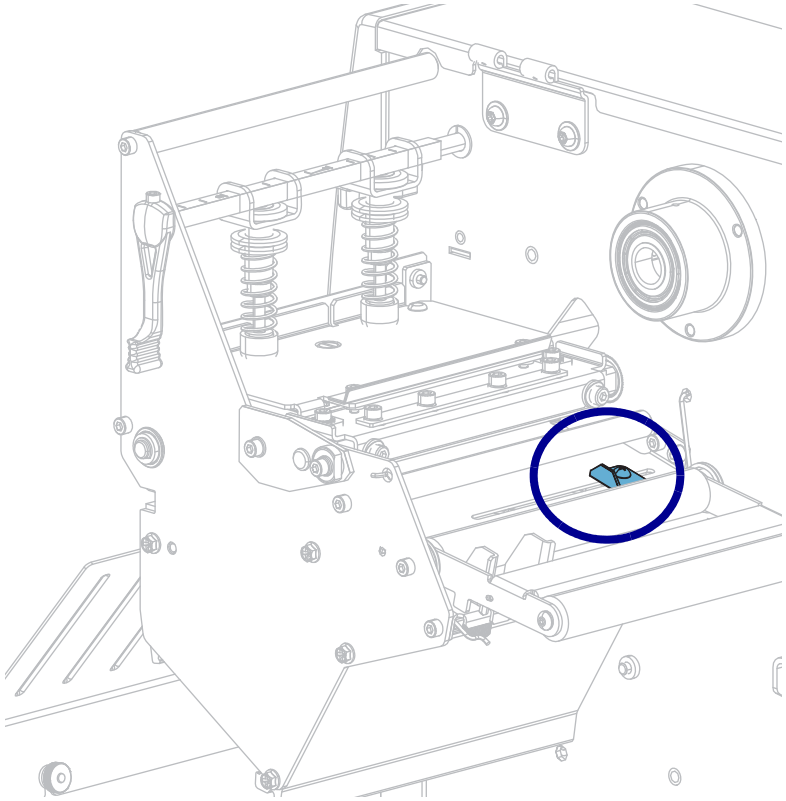

3. Slide the upper media sensor along the slot to the desired position.

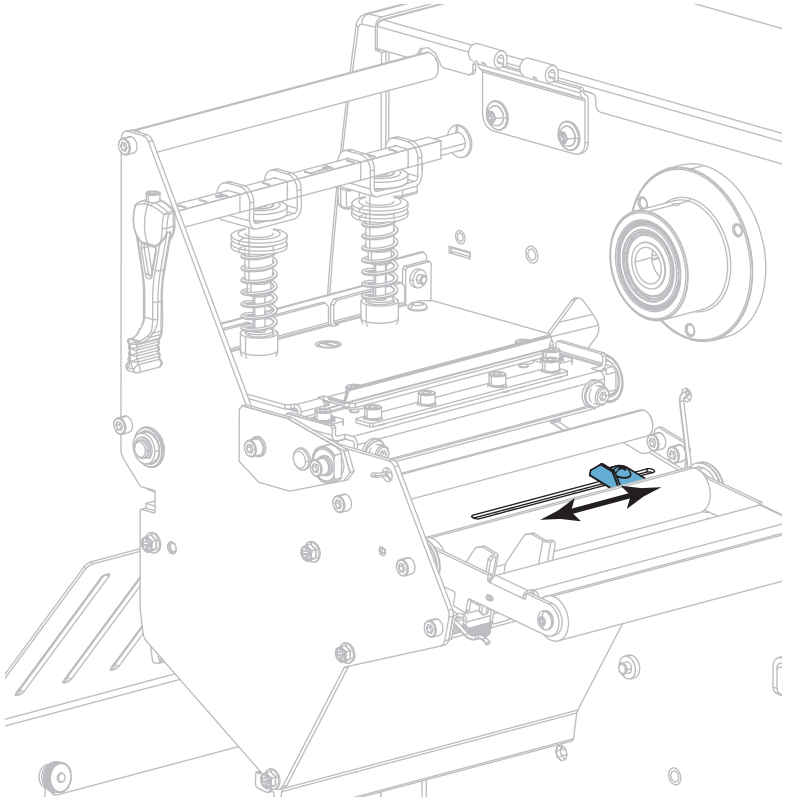

4. Locate the lower media sensor assembly under the rear roller.

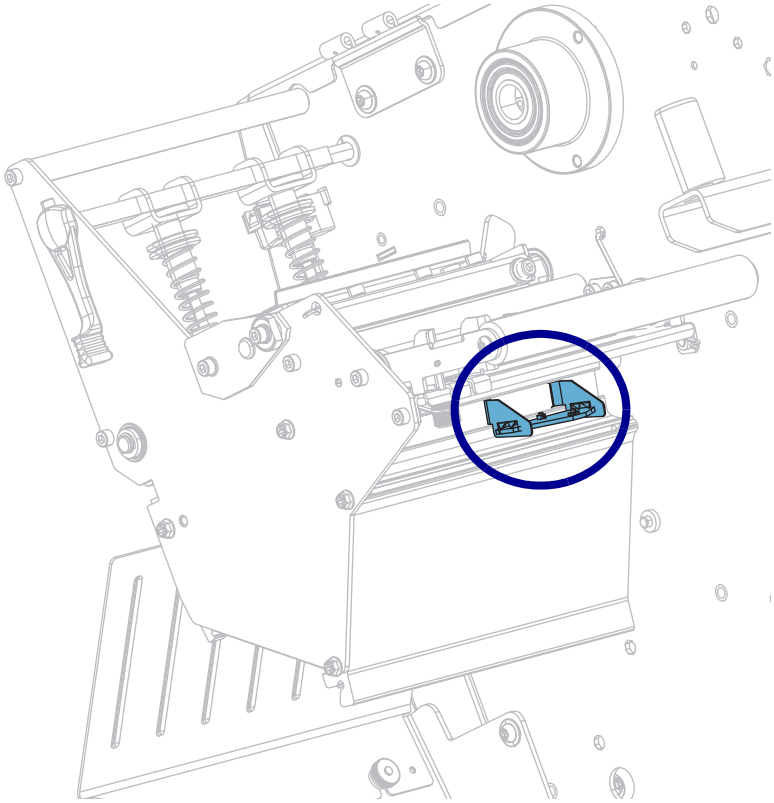

5. Slide the lower sensor until it is under the upper media sensor. Gently pull the wires as needed (wires should have a little slack).

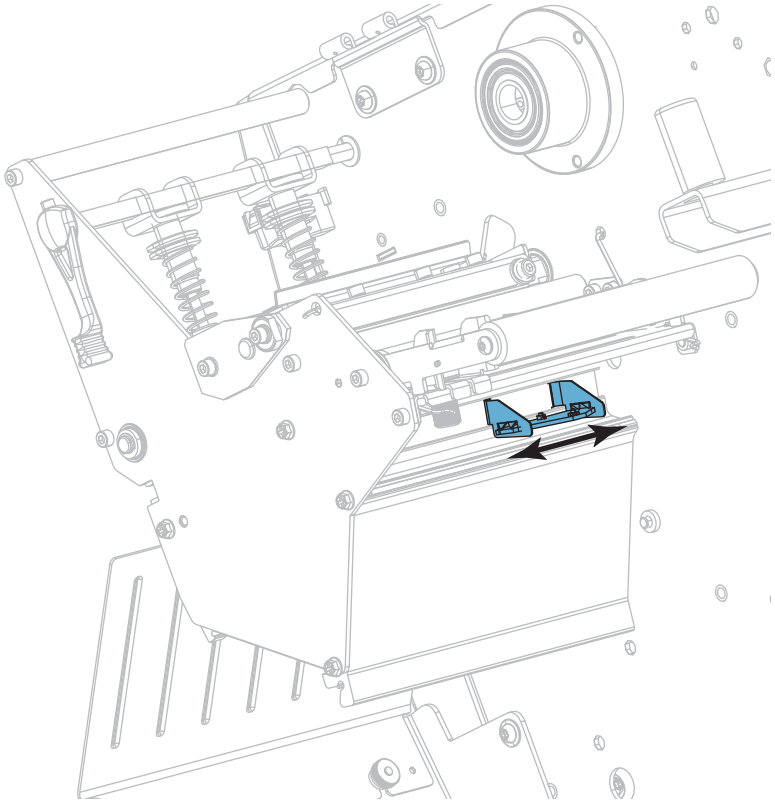

Remove Used Ribbon

At minimum, remove used ribbon from the ribbon take-up spindle each time you change the roll of ribbon. With ribbon that is half or less the width of the printhead, remove used ribbon each time you load a new roll of media. This ensures that uneven pressure on the ribbon take-up spindle does not interfere with the ribbon release bars on the spindle.

To remove used ribbon, complete these steps:

1. Has the ribbon run out?

If the ribbon...	Then
Ran out	Continue with the next step.
Did not run out	Cut or break the ribbon before the ribbon take-up spindle. 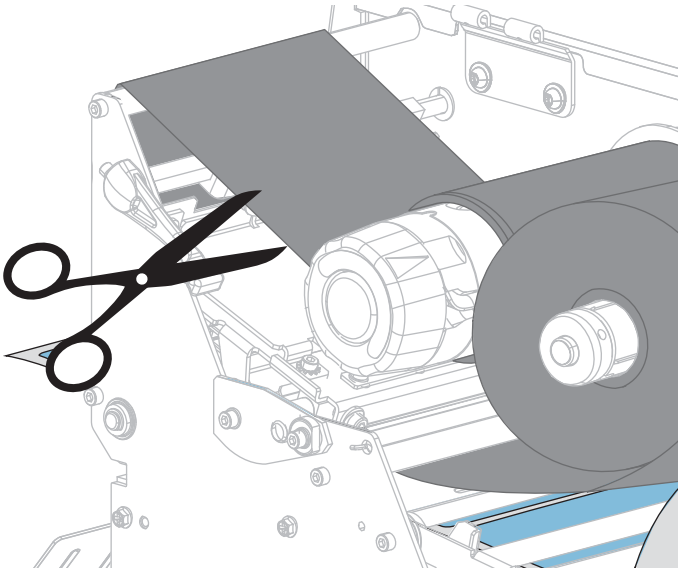 **Caution** • Do not cut the ribbon directly on the ribbon take-up spindle. Doing so may damage the spindle.

2. While holding the ribbon take-up spindle, turn the ribbon release knob to the left until it stops.

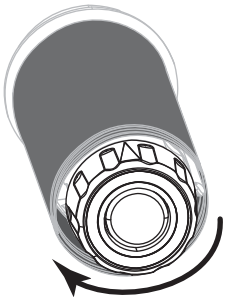

The ribbon release bars pivot down, easing the spindle's grip on the used ribbon.

3. After the ribbon release bars have pivoted down, if possible, turn the ribbon take-up spindle one full to the right to help loosen the ribbon on the spindle.

4. Slide the used ribbon off of the ribbon take-up spindle and discard.

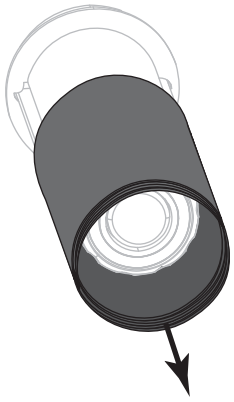

Install the Rewind/Liner Take-Up Plate

The rewind/liner take-up plate is used in different positions for Rewind mode versus Peel mode or Applicator Mode.

Peel Mode/Applicator Mode

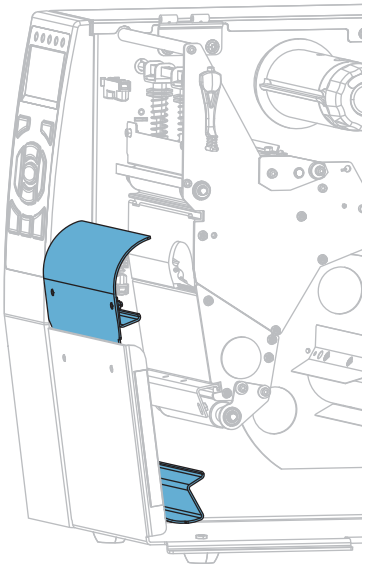

To install the rewind/liner take-up plate for Peel mode or Applicator mode:

1. Loosen the two knurled nuts on the outside stud on the printer's base.

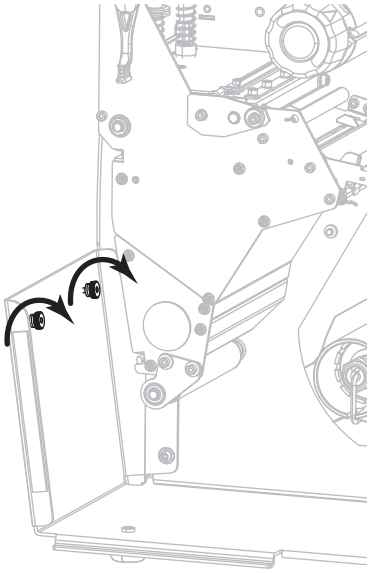

2. Align the large holes of the keyholes in the rewind/peel plate over the knurled nuts, and then slide the plate down until it hits the studs.

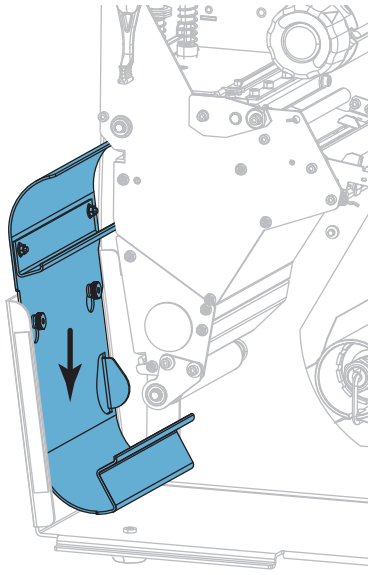

3. Tighten the two knurled nuts.

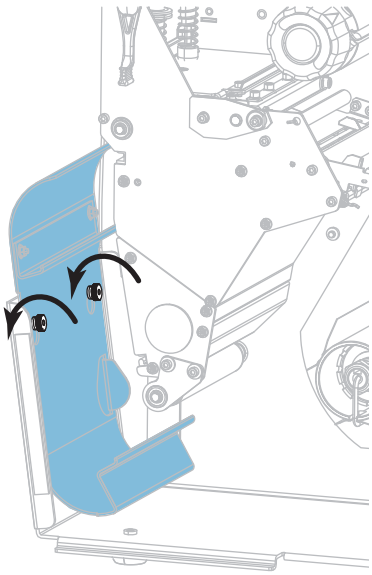

Rewind Mode

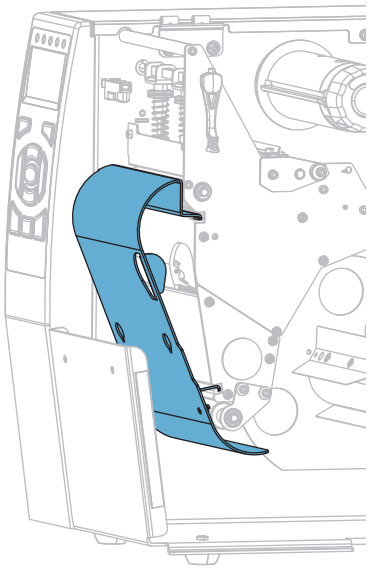

To install the rewind/liner take-up plate for Rewind mode:

1. Align the upper and lower lips of the rewind plate with the slots in the print mechanism and the rewind assembly.

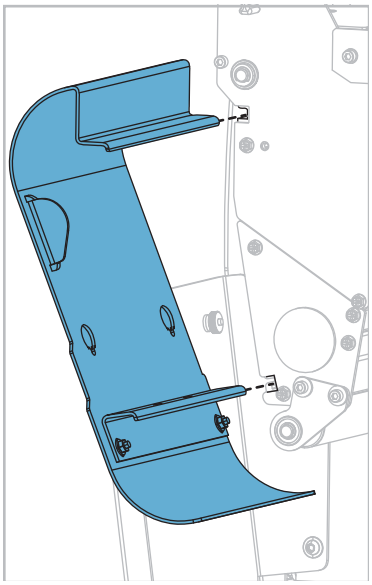

2. Slide the plate into the slots until it stops.

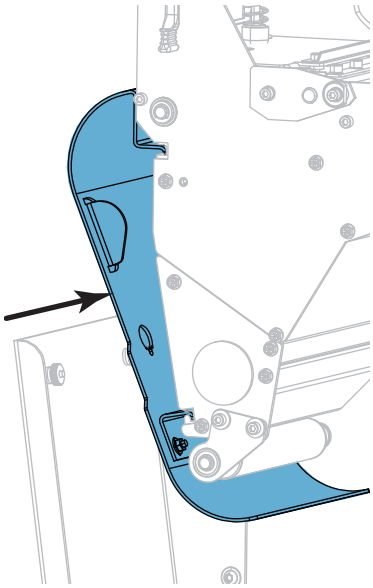

4

Routine Maintenance

This section provides routine cleaning and maintenance procedures.

Contents

Cleaning Schedule and Procedures. 198
Clean the Exterior, the Media Compartment, and the Sensors 199
Clean the Printhead and Platen Roller. 200
Clean and Lubricate the Cutter Module 204
Replacing Printer Components 213
Ordering Replacement Parts 213
Recycling Printer Components 213
Ordering Replacement Parts 213
Lubrication 213

Cleaning Schedule and Procedures

Routine preventive maintenance is a crucial part of normal printer operation. By taking good care of your printer, you can minimize the potential problems that you might have with it and help to achieve and to maintain your standards for print quality.

Over time, the movement of media or ribbon across the printhead wears through the protective ceramic coating, exposing and eventually damaging the print elements (dots). To avoid abrasion:

- Clean the printhead frequently.
- Minimize printhead pressure and burn temperature (darkness) settings by optimizing the balance between the two.
- When using Thermal Transfer mode, ensure that the ribbon is as wide or wider than the media to prevent exposing the printhead elements to the more abrasive label material.

Note • Zebra is not responsible for damage caused by the use of cleaning fluids on this printer.

Specific cleaning procedures are provided on the following pages. Table 4 shows the recommended cleaning schedule. These intervals are intended as guidelines only. You may have to clean more often, depending upon your application and media.

Table 4 • Recommended Cleaning Schedule

Area		Method	Interval
Printhead		Solvent*	**Direct Thermal Mode:** After every roll of media (or 500 feet of fanfold media). **Thermal Transfer Mode:** After every roll of ribbon.
Platen roller		Solvent*	
Media sensors		Air blow	
Ribbon sensor		Air blow	
Media path		Solvent*	
Ribbon path		Solvent*	
Pinch roller (part of Peel-Off option)		Solvent*	
Cutter module	If cutting continuous, pressure-sensitive media	Solvent*	After every roll of media (or more often, depending upon your application and media).
	If cutting tag stock or label liner material	Solvent* and air blow	After every two or three rolls of media.
Tear-off/peel-off bar		Solvent*	Once a month.
Take-label sensor		Air blow	Once every six months.

* Zebra recommends using the Preventive Maintenance Kit (p/n 47362 or p/n 105950-035 - multipack). In place of this kit, you may use a clean swab dipped in 99.7% isopropyl alcohol.

Clean the Exterior, the Media Compartment, and the Sensors

Over time, dust, grime, and other debris may build up on the outside and inside of your printer, particularly in a harsh operating environment.

Printer Exterior

You may clean the exterior surfaces of the printer with a lint-free cloth and a small amount of a mild detergent, if necessary. Do not use harsh or abrasive cleaning agents or solvents.

Important • Zebra is not responsible for damage caused by the use of cleaning fluids on this printer.

Media Compartment and Sensors

To clean the sensors, complete these steps:

1. Brush, air blow, or vacuum any accumulated paper lint and dust away from the media and ribbon paths and the sensors.

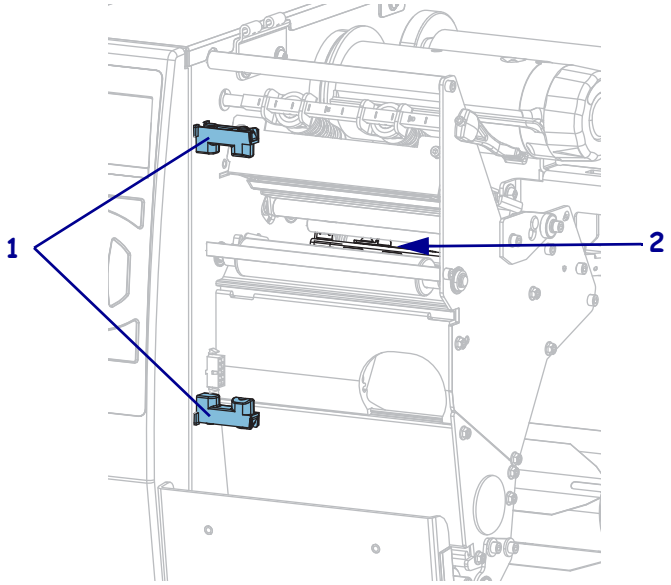

1	Take-label sensor
2	Snap plate

Clean the Printhead and Platen Roller

Inconsistent print quality, such as voids in the barcode or graphics, may indicate a dirty printhead. For the recommended cleaning schedule, see Table 4 on page 198.

Caution • While performing any tasks near an open printhead, remove all rings, watches, hanging necklaces, identification badges, or other metallic objects that could touch the printhead. You are not required to turn off the printer power when working near an open printhead, but Zebra recommends it as a precaution. If you turn off the power, you will lose all temporary settings, such as label formats, and you must reload them before you resume printing.

Caution • The printhead may be hot and could cause severe burns. Allow the printhead to cool.

Caution • Before touching the printhead assembly, discharge any built-up static electricity by touching the metal printer frame or by using an antistatic wriststrap and mat.

To clean the printhead and platen roller, complete these steps:

1. Raise the media door.

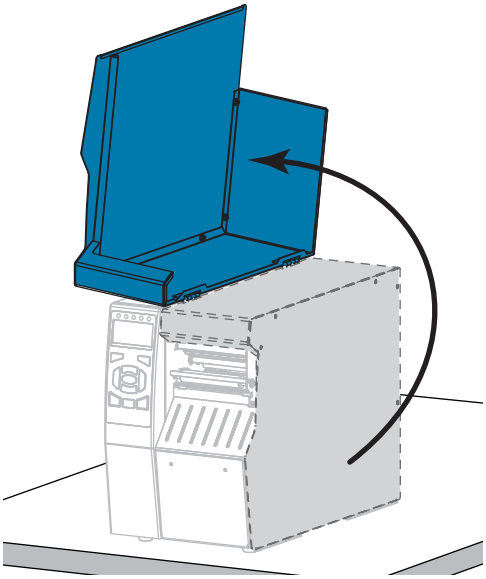

2. **Caution •** The printhead may be hot and could cause severe burns. Allow the printhead to cool.

   Open the printhead assembly by rotating the printhead-open lever upward.

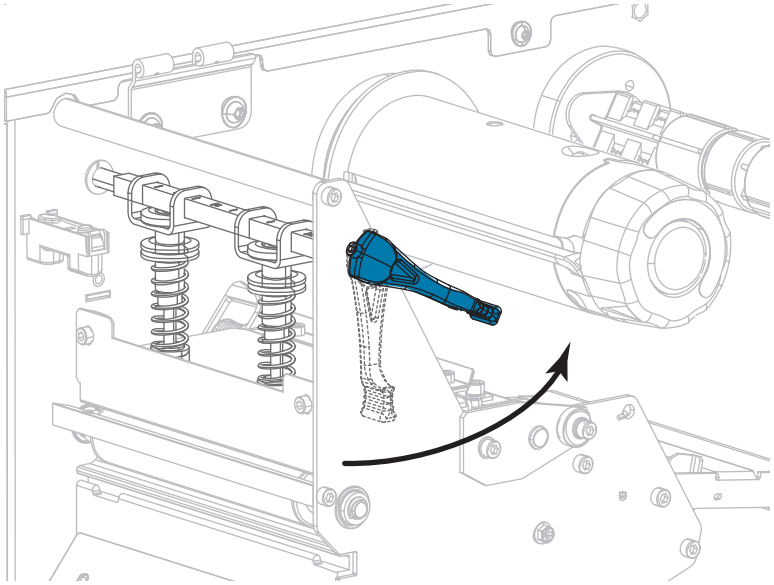

3. Remove the ribbon (if used) and the media.

4. Using the swab from a Zebra Preventive Maintenance Kit, wipe along the brown strip on the printhead assembly from end to end. In place of the Preventive Maintenance Kit, you may use a clean swab dipped in 99.7% isopropyl alcohol. Allow the solvent to evaporate.

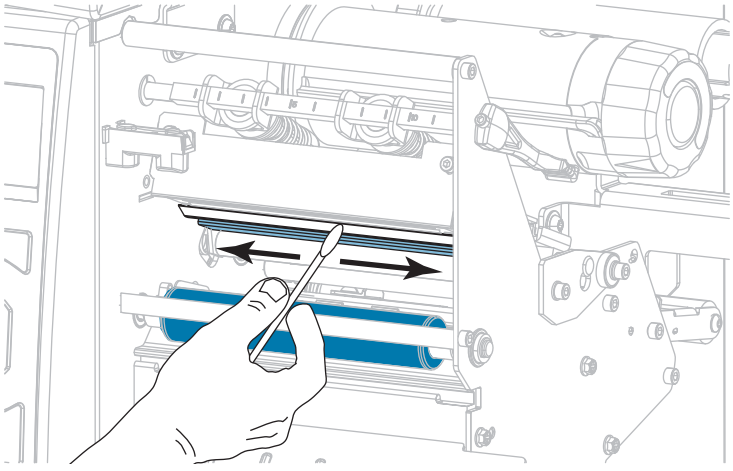

5. While manually rotating the platen roller, clean it thoroughly with the swab. Allow the solvent to evaporate.

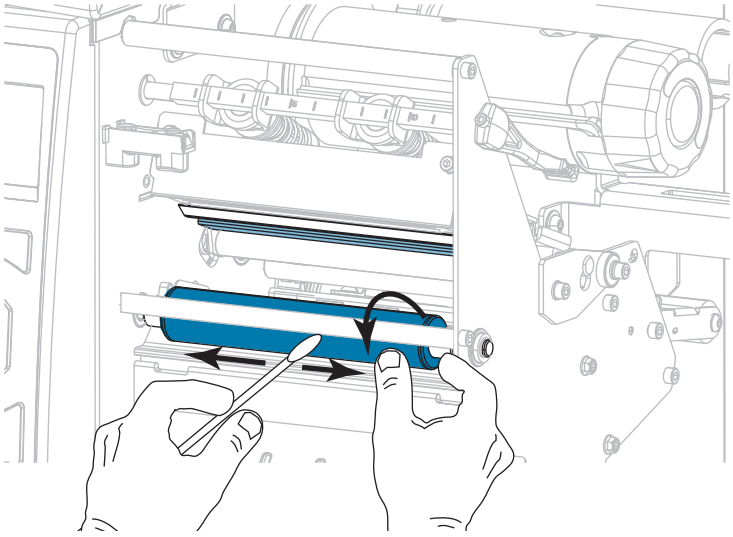

6. Reload the ribbon (if used) and the media. For instructions, see *Load the Ribbon* on page 60 or *Load the Media* on page 30.

7. Rotate the printhead-open lever downward until it locks the printhead in place.

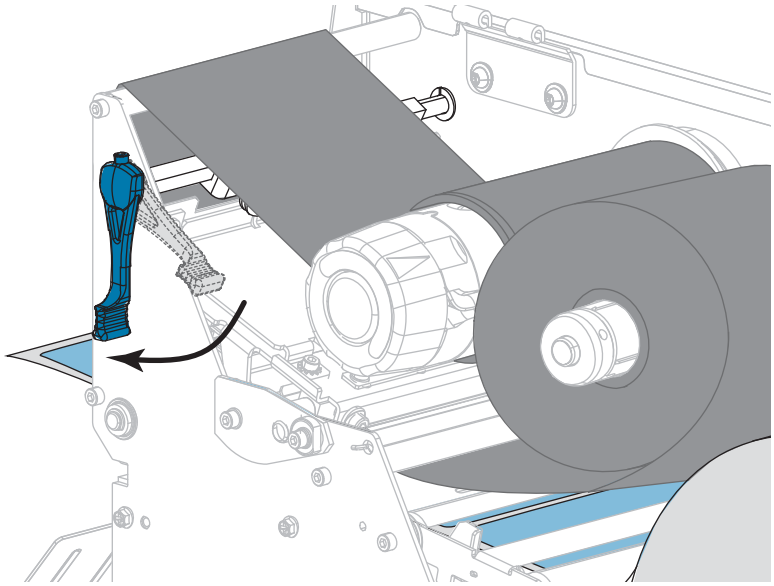

8. Close the media door.

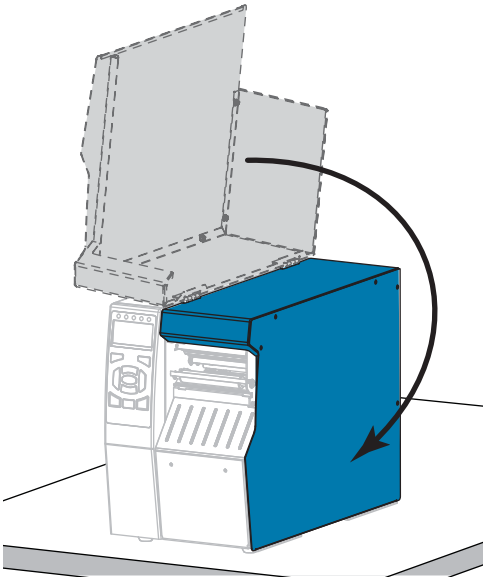

The printer is ready to operate.

9. Press PAUSE to exit pause mode and enable printing.

The printer may perform a label calibration or feed a label, depending on your settings.

Note • If performing this procedure does not improve print quality, try cleaning the printhead with *Save-A-Printhead* cleaning film. This specially coated material removes contamination buildup without damaging the printhead. Call your authorized Zebra reseller for more information.

Clean and Lubricate the Cutter Module

If the cutter is not cutting the labels cleanly or if it jams with labels, clean the cutter blades. After cleaning the blades, apply lubrication to them to help extend the life of your cutter module.

Caution • For personnel safety, always power off and unplug the printer before performing this procedure.

To clean the cutter module, complete these steps:

1. **Caution •** Turn off (**O**) the printer and disconnect it from the power source before performing the following procedure.

   Turn off (**O**) the printer and disconnect the AC power cord.

2. Raise the media door.

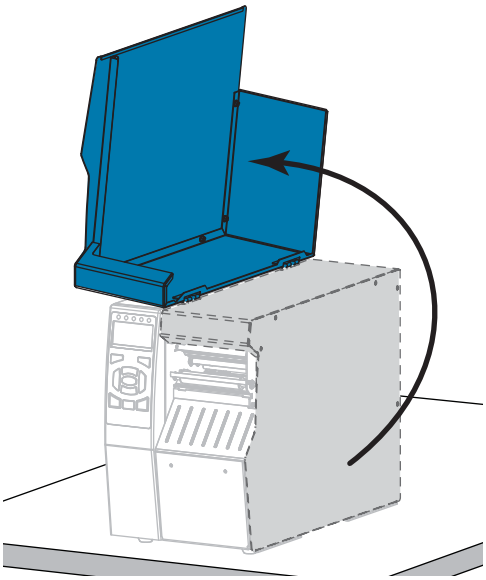

3. Remove the media from the cutter module.

4. Remove the cutter catch tray (if used).

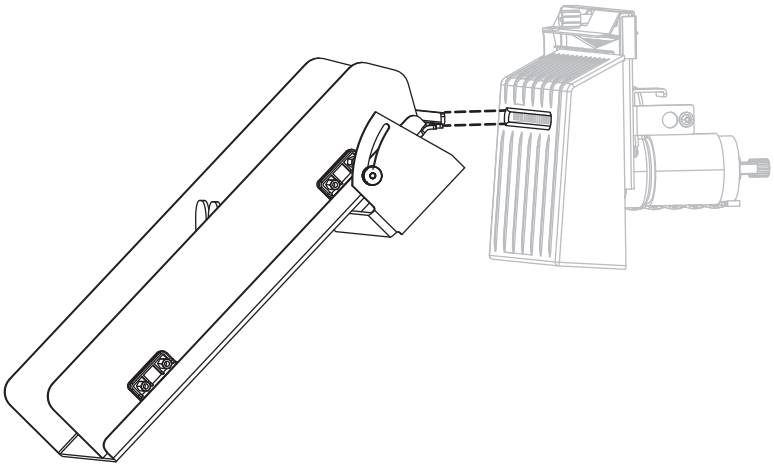

5. Loosen and remove the thumbscrew and lock washer on the cutter shield.

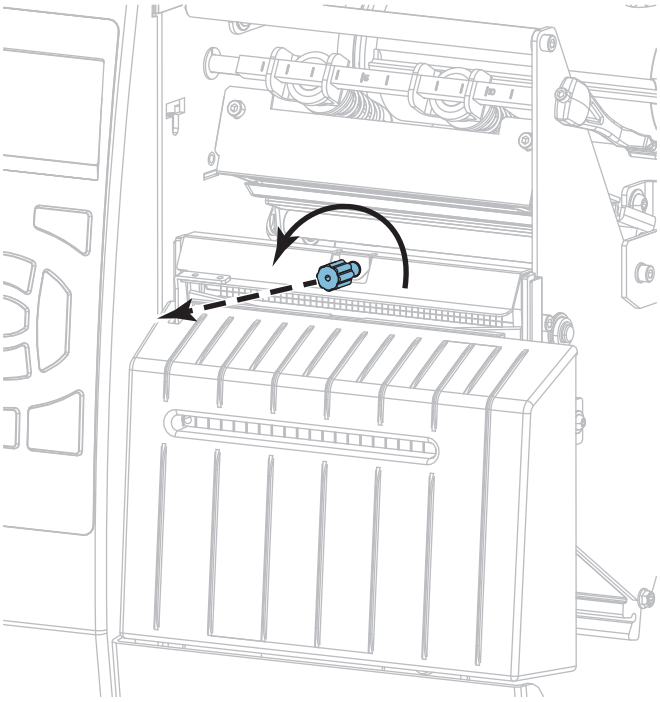

6. **Caution** • The cutter blade is sharp. Do not touch or rub the blade with your fingers.

Remove the cutter shield.

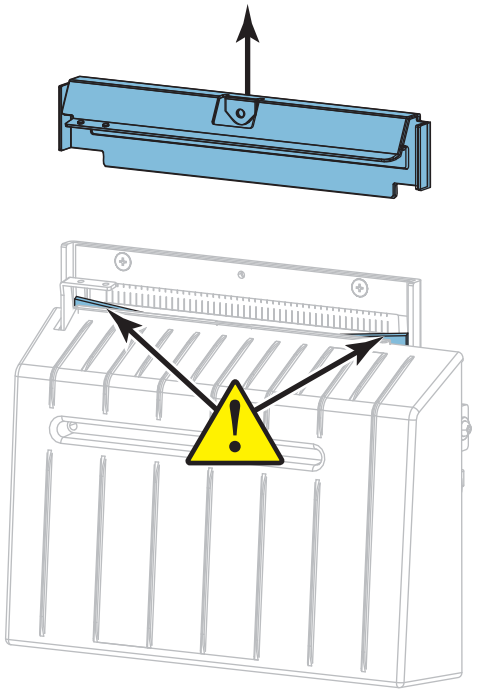

7. Is the cutter blade fully exposed?

Blade in lowered position

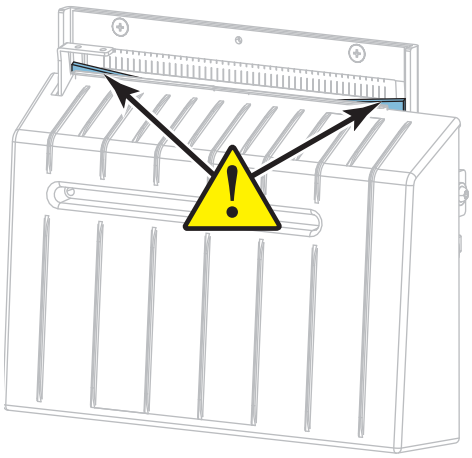

Blade fully exposed

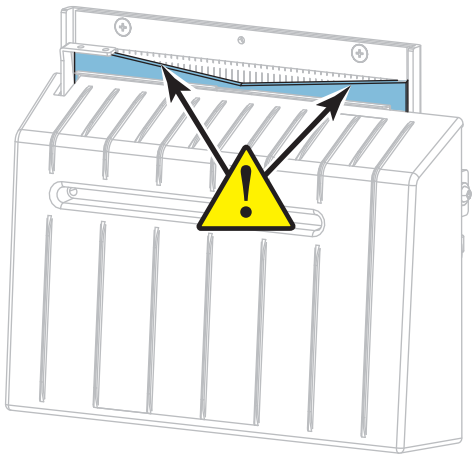

If the blade is…	Then…
Lowered	Continue with step 8 to remove the cutter module from the printer so that you can rotate the blade upward.
Fully exposed	Skip to step 9 on page 209.

8.

Important • This part of the procedure should be performed only by experienced users and only when the cutter blade is not fully exposed for cleaning, as shown in the previous step.

8-a. Remove the cutter mounting screw.

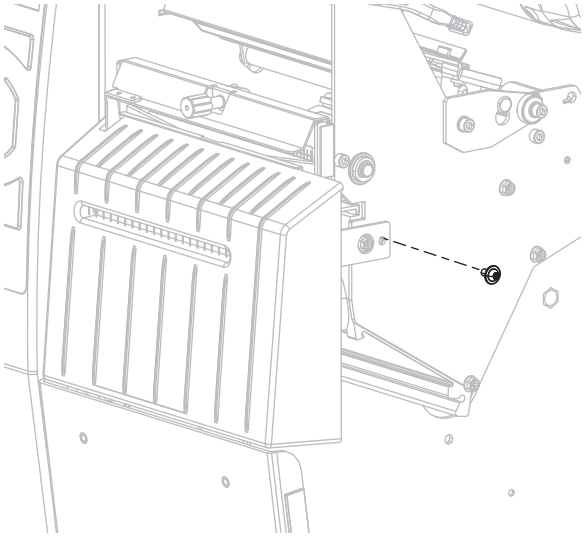

8-b. Slide the cutter module to the right to align the cutter assembly tabs (**1**) and cutter cover tabs (**2**) with the corresponding slots (**3**) in the printer, and then lift the cutter module out of the printer. Take care not to damage the wires that connect the cutter module to the printer. If desired, you may disconnect these wires.

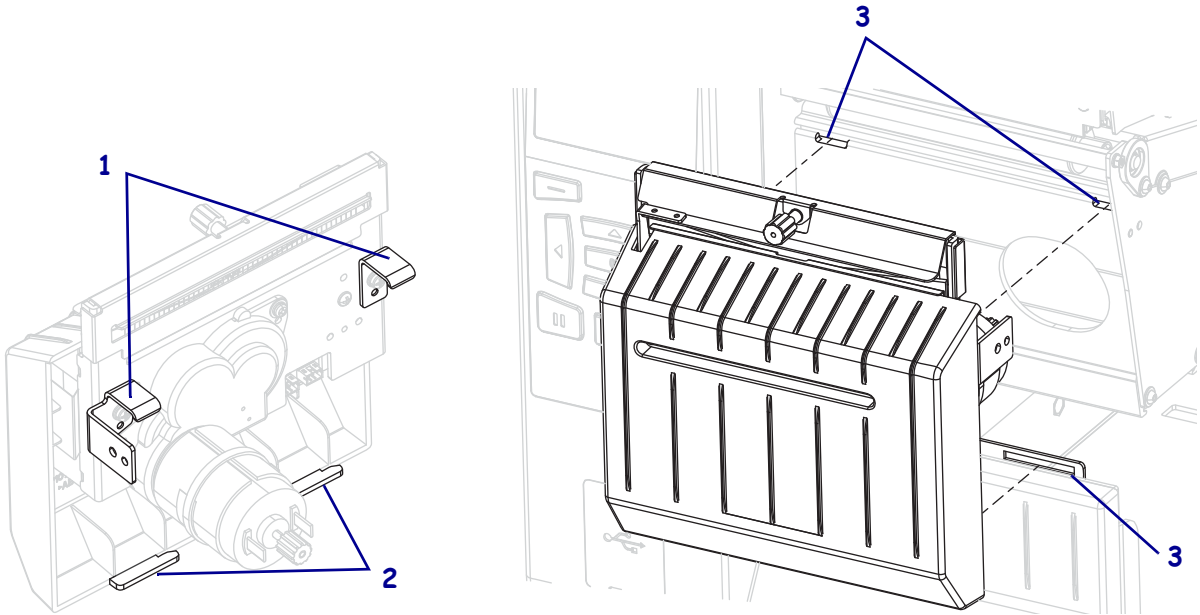

8-c. On the back of the cutter module, rotate the cutter motor thumbscrew to fully expose the cutter blade.

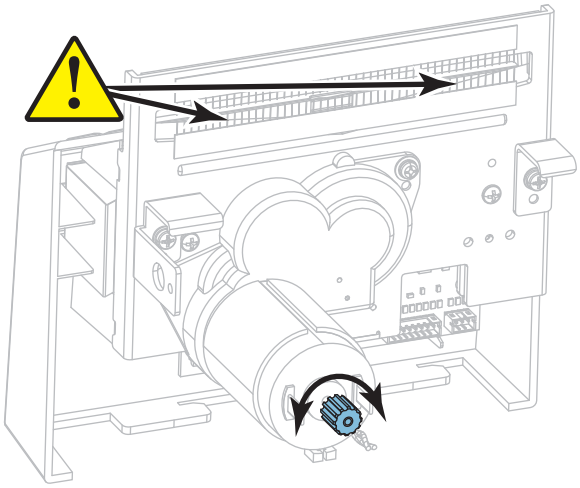

8-d. If you disconnected the wires that connect the cutter module to the printer, reconnect them.

8-e. Align the cutter assembly tabs (**1**) and cutter cover tabs (**2**) with the corresponding slots (**3**) in the printer, and then slide the cutter assembly back into the printer. Take care not to damage the wires that connect the cutter module to the printer.

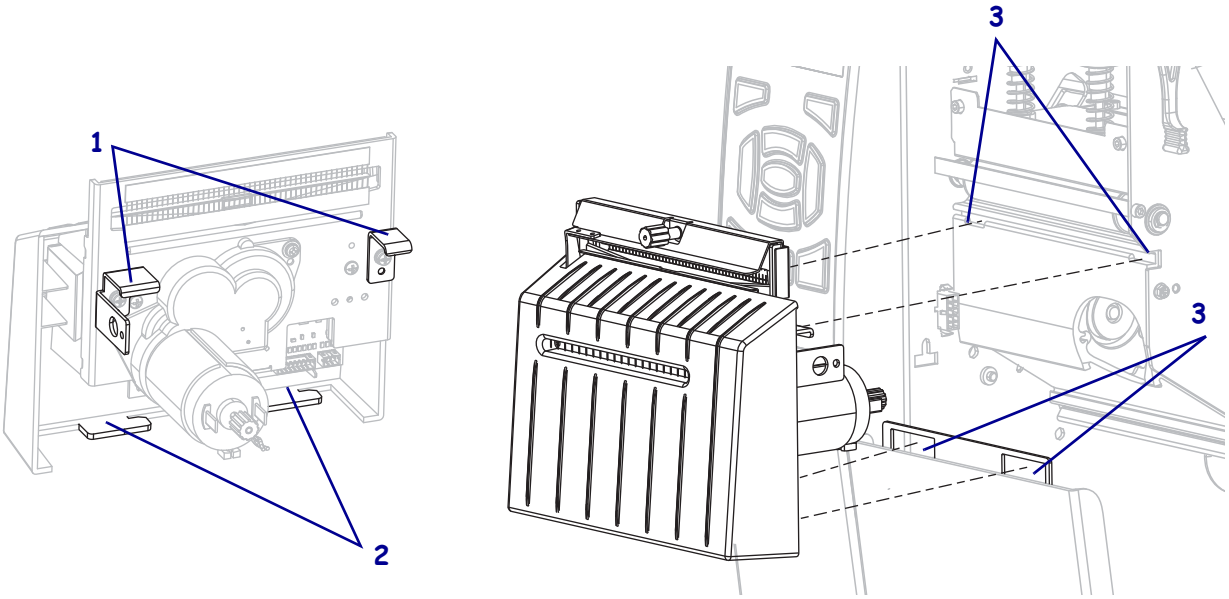

8-f. Slide the cutter module to the left, and then reinstall the cutter mounting screw.

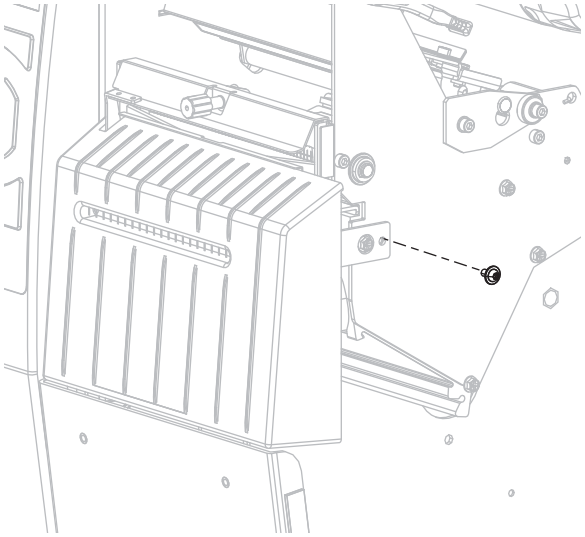

8-g. Continue with step 9.

9. Using the swab from the Preventive Maintenance Kit (part number 47362), wipe along the upper cutting surface and the cutter blade. In place of the Preventive Maintenance Kit, you may use a clean swab dipped in 99.7% isopropyl alcohol. Allow the solvent to evaporate.

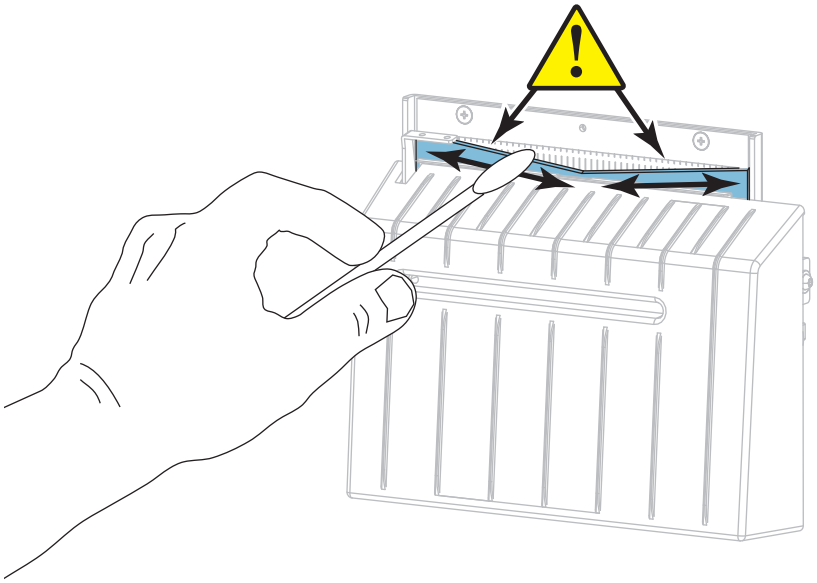

10. When the solvent has evaporated, soak a clean swab in a general-purpose, higher-viscosity silicone or PTFE oil lubricant.

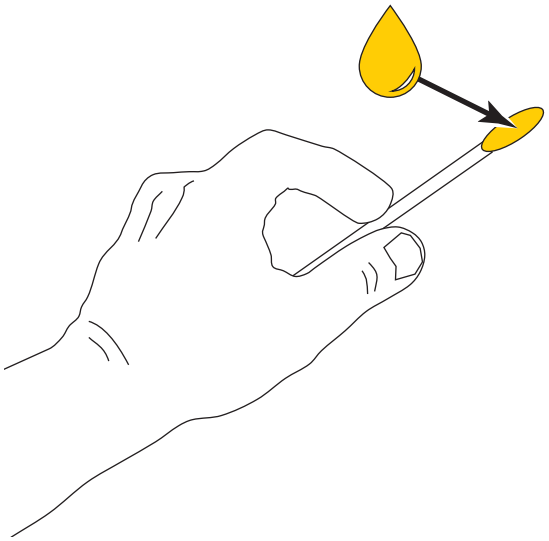

11. Apply an even layer along all exposed surfaces of both cutter blades. Remove any excess oil so that none of it comes in contact with the printhead or platen roller.

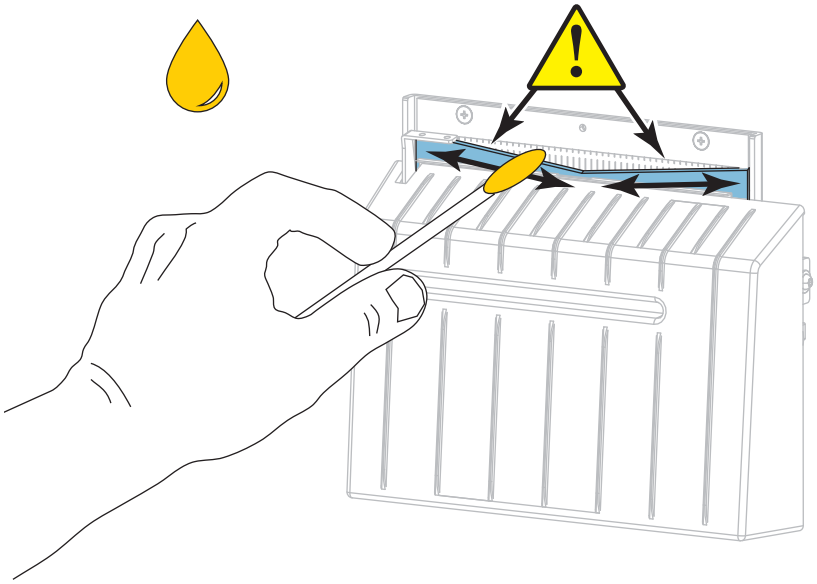

12. **Caution •** The cutter blade is sharp. For operator safety, replace the cutter shield.

Replace the cutter shield and secure it with the thumbscrew and lock washer that you removed earlier.

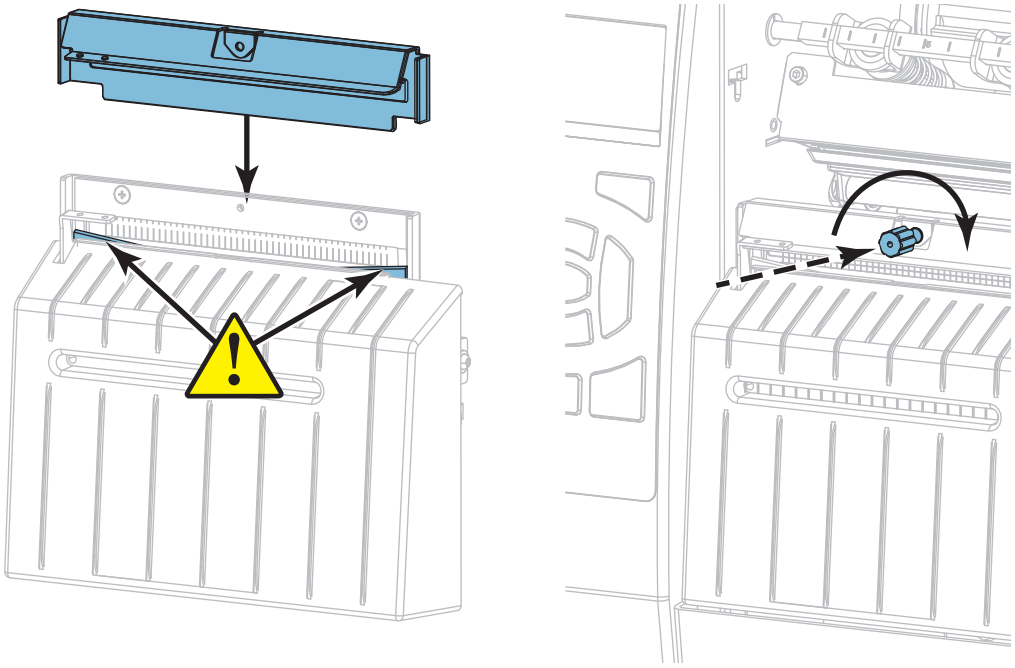

13. Reinstall the media.

14. Close the media door.

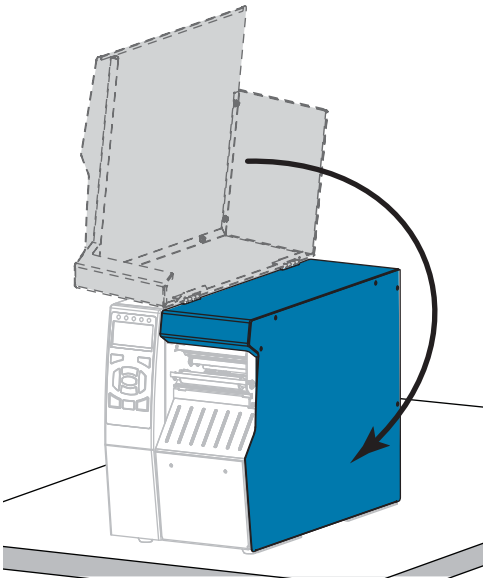

15. Plug the printer into its power source, and then turn on (**I**) the printer.

    The cutter blade returns to its operating position.

16. Reinstall the cutter catch tray (if used).

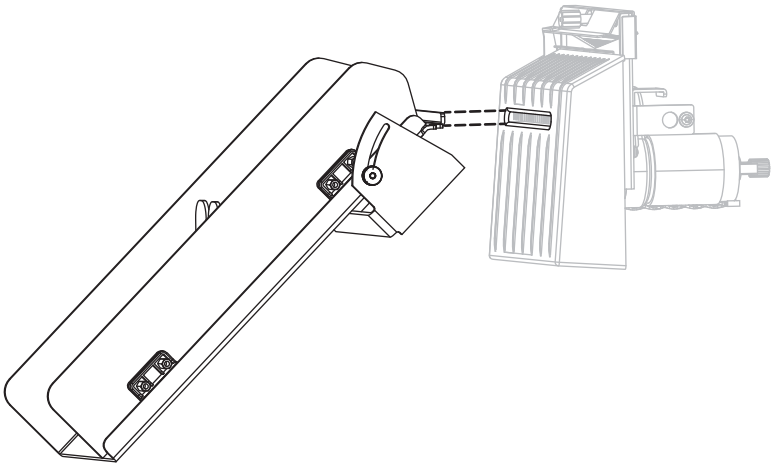

17. If the cutter continues to perform unsatisfactorily, contact an authorized service technician.

Replacing Printer Components

Some printer components, such as the printhead and platen roller, may wear out over time and can be replaced easily. Regular cleaning may extend the life of some of these components. See Table 4 on page 198 for the recommended cleaning intervals.

Ordering Replacement Parts

The ZT500 Series printers are designed to work only with genuine Zebra™ printheads, thus maximizing safety and print quality.

Contact your authorized Zebra reseller for part ordering information.

Recycling Printer Components

The majority of this printer's components are recyclable. The printer's main logic board may include a battery that you should dispose of properly.

Do not dispose of any printer components in unsorted municipal waste. Please dispose of the battery according to your local regulations, and recycle the other printer components according to your local standards. For more information, see http://www.zebra.com/environment.

Ordering Supplies

For optimal printing quality and proper printer performance across our product line, Zebra strongly recommends the use of Zebra Certified Supplies as part of the total solution. A wide range of paper, polypropylene, polyester, and vinyl stock has been specifically engineered to enhance the printing capabilities of the printer and to prevent premature printhead wear. To purchase supplies, go to http://www.zebra.com/supplies.

Lubrication

The only lubrication needed for this printer is for the cutter module. Follow the instructions in *Clean and Lubricate the Cutter Module* on page 204. Do not lubricate any other parts of the printer.

Caution • Some commercially available lubricants will damage the finish and the mechanical parts if used on this printer.

Notes •

5

Diagnostics and Troubleshooting

This section provides diagnostic tests and other information that may help you to optimize printing or to troubleshoot issues with your printer.

For videos of some common procedures, go to http://www.zebra.com/zt500-info.

Contents

QR Codes and QuickHelp Pages . . . 216
Judging Barcode Quality . . . 217
Printer Diagnostic Tests . . . 219
- Print Test Format Option . . . 220
- Optimal Darkness and Speed Test . . . 225
- Communication Diagnostics Test . . . 227
- Sensor Profile . . . 228

Troubleshooting . . . 232
- Indicator Lights . . . 230
- Alerts and Error Messages . . . 232
- Printing Issues . . . 236
- Ribbon Issues . . . 240
- RFID Issues . . . 240
- Communications Issues . . . 242
- Miscellaneous Issues . . . 243

QR Codes and QuickHelp Pages

With many alerts or error messages, the printer includes the option to view a QuickHelp page from a smartphone. When this option is available, the lower right-hand corner of the alert or error message displays QR.

To access a QuickHelp page from an error message, do the following:

1. While the message is on the screen, press RIGHT SELECT to select QR.

   The printer displays a QuickHelp page specific to that error message. This page includes a QR code, such as this.

2. Scan the QR code with a smartphone.

   Your phone accesses either a video specific to that error message or the Zebra support page for your printer.

Judging Barcode Quality

Figure 18 shows how printer settings such as darkness and print speed can affect the quality of barcodes. Set the print darkness to the lowest setting that provides good print quality. Tests such as the *Print Test Format Option* on page 220 and the *Optimal Darkness and Speed Test* on page 225 can be used to help determine the optimal settings for your printer and media.

Figure 18 • Barcode Darkness Comparison

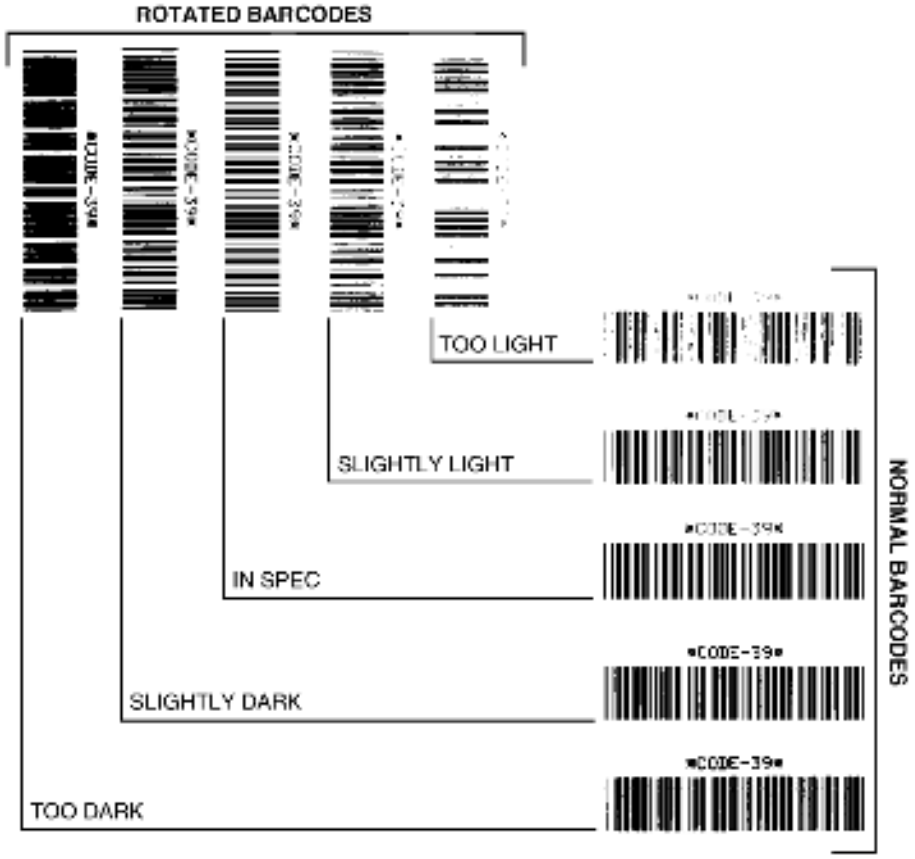

Too Dark Labels that are too dark are fairly obvious. They may be readable but not "in-spec."

- The normal barcode bars increase in size.
- The openings in small alphanumeric characters may fill in with ink.
- Rotated barcode bars and spaces run together.

Slightly Dark Slightly dark labels are not as obvious.

- The normal barcode will be "in-spec."
- Small character alpha numerics will be bold and could be slightly filled in.
- The rotated barcode spaces are small when compared to the "in-spec" code, possibly making the code unreadable.

"In-Spec" The "in-spec" barcode can only be confirmed by a verifier, but it should exhibit some visible characteristics.

- The normal barcode will have complete, even bars and clear, distinct spaces.
- The rotated barcode will have complete, even bars and clear, distinct spaces. Although it may not look as good as a slightly dark barcode, the barcode will be "in-spec."
- In both normal and rotated styles, small alphanumeric characters look complete.

Slightly Light Slightly light labels are, in some cases, preferred to slightly dark ones for "in-spec" barcodes.

- Both normal and rotated barcodes will be in spec, but small alphanumeric characters may not be complete.

Too Light Labels that are too light are obvious.

- Both normal and rotated barcodes have incomplete bars and spaces.
- Small alphanumeric characters are unreadable.

Printer Diagnostic Tests

Diagnostic tests provide specific information about the condition of the printer and its components. The resulting printouts provide information that helps to determine the optimal operating conditions for the printer as well as to troubleshoot any issues.

Important • When performing the diagnostic tests in this section, do not send data to the printer from the host.

Note •

- For best results, use full-width media when performing these diagnostic tests.
- If your media is shorter than the image to be printed, the image extends onto multiple labels.

Print Test Format Option

The option *PRINT TEST FORMAT* on page 136 can be used to print various labels that can assist you with troubleshooting or with making adjustments to your printer. This section describes the selections for this option.

DARKNESS

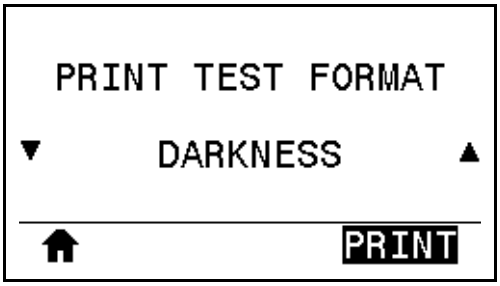

The printer repeats printing an image with incrementing darkness levels. Press CANCEL to stop the printing process at any time when the pattern is clear and legible.

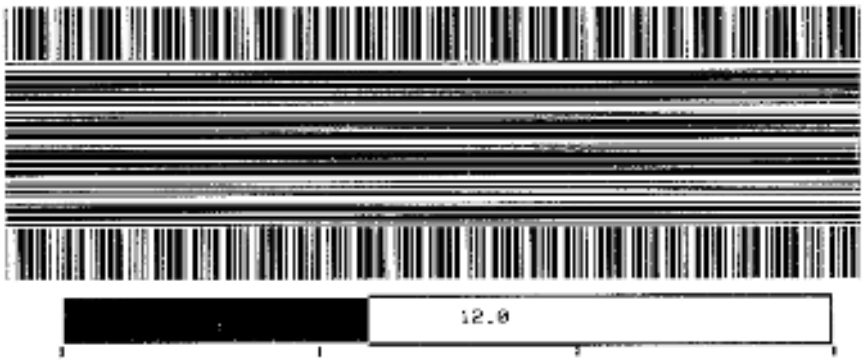

Use the numbers on the images to determine the best print darkness. If necessary, change your darkness setting to the one that gave you the best results on the above labels. (See *DARKNESS* on page 106.)

FIRST DOT LOCATION

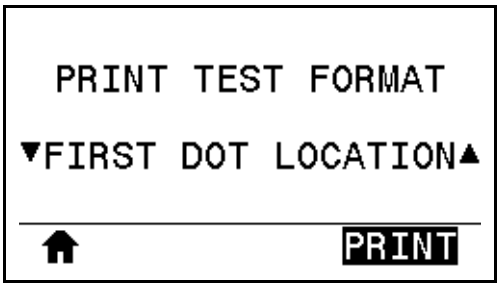

The printer prints an image to assist you with adjusting the position of the image on your labels, if necessary. The lines on the image print from the label top and left edge to identify what should be the top-left corner of the label.

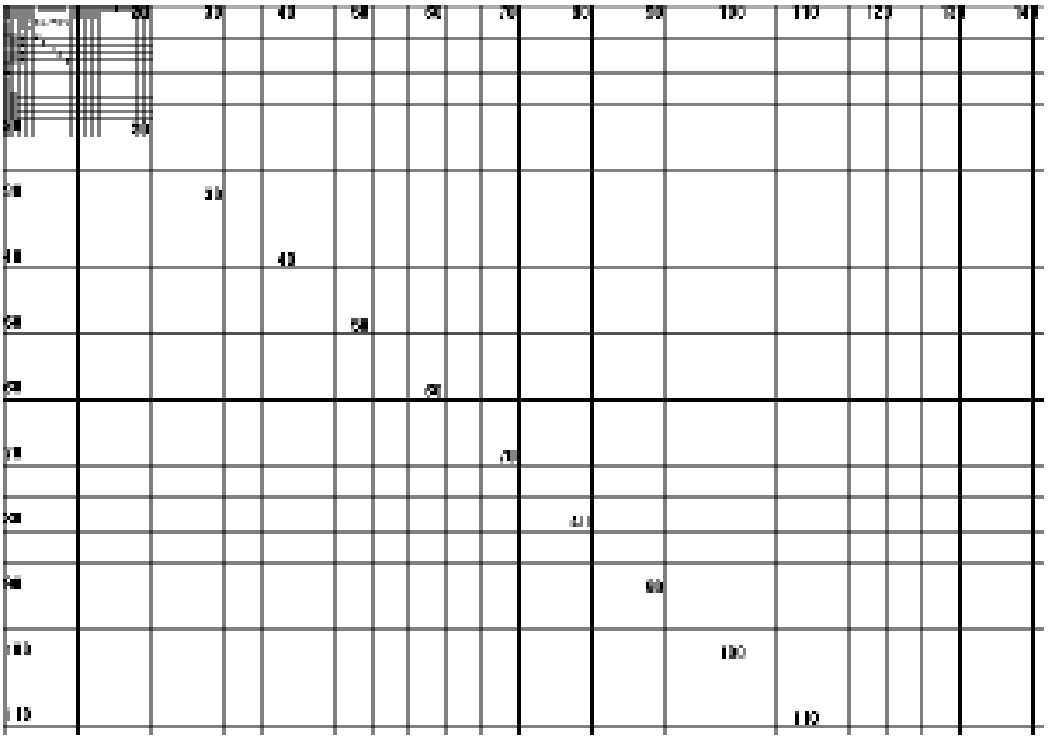

If necessary, use *TEAR OFF* on page 110 and *LEFT POSITION* on page 114 to adjust the image location.

PRINT LINE

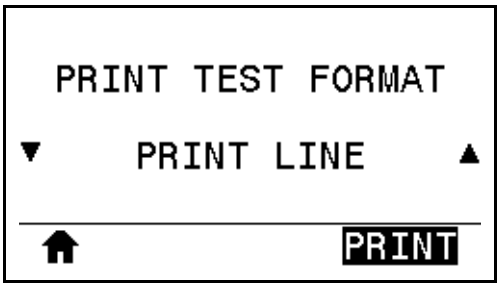

The printer initiates a test sequence that prints an ink/printhead test image multiple times and at varying speeds. These test labels can be used when making adjustments to the printer's mechanical assemblies or to determine if any printhead elements are not working.

During each phase of the test sequence, the printer prints a number of labels at a particular speed and then pauses.

- Press PAUSE to print additional labels at the same speed.
- Press CANCEL to move to the next phase of the test sequence.
- Press and hold CANCEL to exit the test sequence.

Phase	Number of Labels Printed Each Time	Print Speed
1	15 labels	the printer's slowest speed
2	15 labels	6 in. (152 mm) per second
3	50 labels	the printer's slowest speed
4	50 labels	6 in. (152 mm) per second
5	50 labels	the printer's maximum speed

As an alternate way to initiate the PRINT LINE test sequence, reboot the printer while holding PAUSE. Release PAUSE when the first control panel light turns off. (Formerly called a PAUSE self test.)

IMAGE COMPRESSION

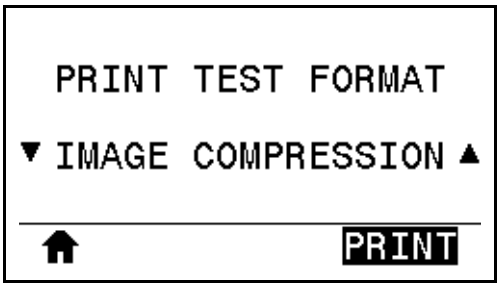

The printer prints an image with diagonal lines, circles, and hash marks at regular intervals around the edges of the image to assist with issues regarding compression or stretching of an image. You can measure the distance between the hash marks or compare the circles and lines to verify if things are being distorted.

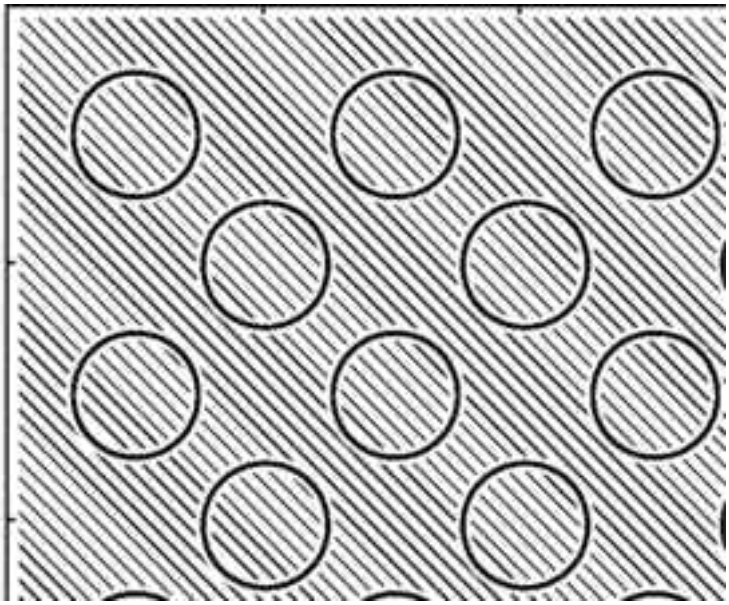

ELEMENT OUT

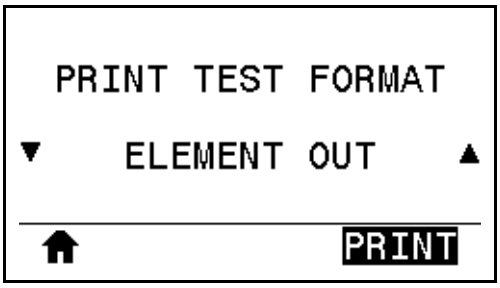

The printer prints a horizontal image designed to show if a printhead element is not functioning.

Optimal Darkness and Speed Test

(This test was formerly called the FEED self test.) Different types of media may require different darkness settings. This section contains a simple but effective method for determining the ideal darkness for printing barcodes that are within specifications.

During this test, labels are printed at different darkness settings and at different print speeds. The relative darkness and the print speed are printed on each label. The barcodes on these labels may be ANSI-graded to check print quality.

The darkness value starts at three settings lower than the printer's current darkness setting (relative darkness of –3) and increase until the darkness is three settings higher than the current darkness value (relative darkness of +3).

To perform the optimal darkness and speed test, complete these steps:

1. Print a configuration label to show the printer's current settings. (See *PRINT INFORMATION* on page 117.)
2. Turn off (**O**) the printer.
3. Press and hold FEED while turning on (**I**) the printer. Hold FEED until the first control panel light turns off.

   The printer prints a series of labels (Figure 19) at various speeds and at darkness settings higher and lower than the darkness value shown on the configuration label.

Figure 19 • Sample Darkness and Speed Test Label

4. See *Judging Barcode Quality* on page 217. Inspect the test labels and determine which one has the best print quality for your application. If you have a barcode verifier, use it to measure bars/spaces and calculate the print contrast. If you do not have a barcode verifier, use your eyes or the system scanner to choose the optimal darkness setting based on the labels printed in this self test.

5. Note the relative darkness value and the print speed printed on the best test label.
6. Add or subtract the relative darkness value from the darkness value specified on the configuration label. The resulting numeric value is the best darkness value for that specific label/ribbon combination and print speed.
7. If necessary, change the darkness value to the darkness value on the best test label.
8. If necessary, change the print speed to the same speed as on the best test label.

Communication Diagnostics Test

The communication diagnostics test is a troubleshooting tool for checking the interconnection between the printer and the host computer. When the printer is in diagnostics mode, it prints all data received from the host computer as straight ASCII characters with the hex values below the ASCII text. The printer prints all characters received, including control codes such as CR (carriage return). Figure 20 shows a typical test label from this test.

Note • The test label prints upside-down.

Figure 20 • Sample Communications Diagnostics Test Label

To use communications diagnostics mode, complete these steps:

1. Set the print width equal to or less than the label width being used for the test. (See *PRINT WIDTH* on page 111.)
2. Set the DIAGNOSTIC MODE option to ENABLED. (See *DIAGNOSTIC MODE* on page 125 for more information.

   The printer enters diagnostics mode and prints any data received from the host computer on a test label
3. Check the test label for error codes. For any errors, check that your communication parameters are correct.

   Errors show on the test label as follows:

   - FE indicates a framing error.
   - OE indicates an overrun error.
   - PE indicates a parity error.
   - NE indicates noise.
4. To exit this self test and return to normal operation, power cycle the printer or set the DIAGNOSTIC MODE option to DISABLED.

Sensor Profile

Use the sensor profile image (which will extend across several actual labels or tags) to troubleshoot the following situations:

- The printer experiences difficulty in determining gaps (web) between labels.
- The printer incorrectly identifies preprinted areas on a label as gaps (web).
- The printer cannot detect ribbon.

With the printer in the Ready state, print a sensor profile in one of these ways:

Using the buttons on the control panel	**a.** Turn off (**O**) the printer. **b.** Press and hold FEED + CANCEL while turning on (**I**) the printer. **c.** Hold FEED + CANCEL until the first control panel light turns off.
Using ZPL	**a.** Send the ~JG command to the printer. See the *Zebra Programming Guide* for more information about this command.
Using the control panel display	**a.** Navigate to the following item under the SENSORS menu. 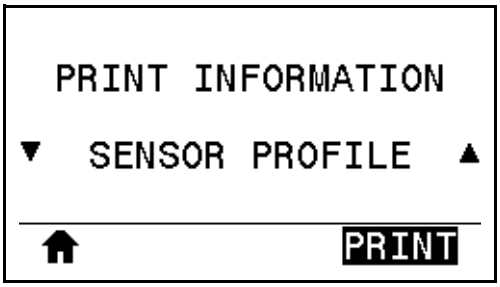 **b.** Press RIGHT SELECT to select PRINT.

Compare your results to the examples shown in this section. If the sensitivity of the sensors must be adjusted, calibrate the printer (see *Calibrate the Ribbon and Media Sensors* on page 177).

Ribbon Sensor Profile The line labeled RIBBON (**1**) on the sensor profile indicates the ribbon sensor readings. The ribbon sensor threshold setting is indicated by OUT (**2**). If the ribbon readings are below the threshold value, the printer does not acknowledge that ribbon is loaded.

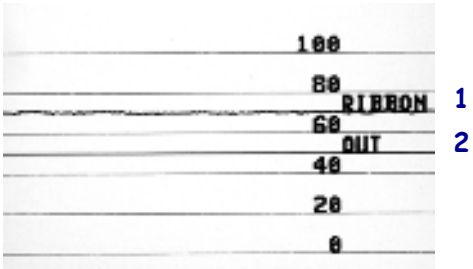

Media Sensor Profile (Figure 21 and Figure 22) The line labeled MEDIA (**1**) on the sensor profile indicates the media sensor readings. The media sensor threshold settings is indicated by WEB (**2**). The media out threshold is indicated by OUT (**3**). The upward or downward spikes (**4**) indicate divisions between labels (the web, notch, or black mark), and the lines between the spikes (**5**) indicate where labels are located.

If you compare the sensor profile printout to a length of your media, the spikes should be the same distance apart as the gaps on the media. If the distances are not the same, the printer may be having difficulty determining where the gaps are located.

Figure 21 • Media Sensor Profile (Gap/Notch Media)

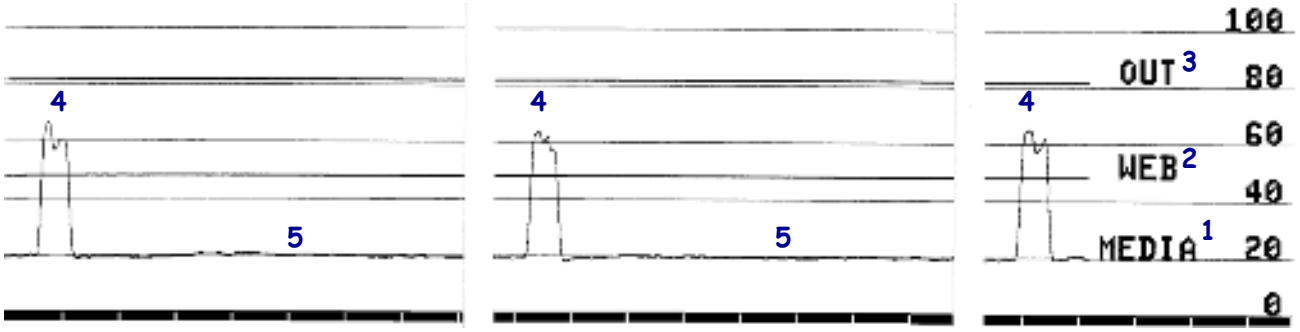

Figure 22 • Media Sensor Profile (Black Mark Media)

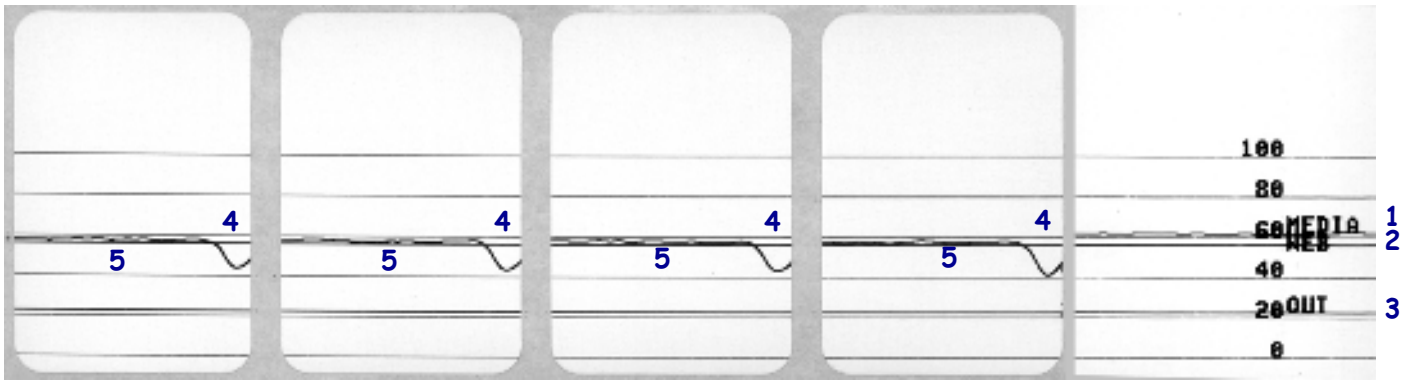

Indicator Lights

Table 5 • Status of Printer As Shown by Indicator Lights

	STATUS light steady green (other lights steady yellow for 2 seconds during printer power-up) The printer is ready.
	PAUSE light steady yellow. The printer is paused.
	STATUS light steady red *SUPPLIES light steady red* The media supply is out. The printer needs attention and cannot continue without user intervention.
	STATUS light steady red *SUPPLIES light flashing red* The ribbon supply is out. The printer needs attention and cannot continue without user intervention.
	STATUS light steady yellow *SUPPLIES light flashing yellow* The printer is in Direct Thermal mode, which does not require ribbon; however, ribbon is installed in the printer.
	STATUS light steady red *PAUSE light steady yellow* The printhead is open. The printer needs attention and cannot continue without user intervention.
	STATUS light steady yellow The printhead is over temperature. **Caution** • The printhead may be hot and could cause severe burns. Allow the printhead to cool.
	STATUS light flashing yellow This indicator light flashing indicates one of the following: • The printhead is under temperature. • The power supply is over temperature. • The main logic board (MLB) is over temperature.
	STATUS light steady red *PAUSE light steady red* *DATA light steady red* The printhead was replaced with one that is not a genuine Zebra™ printhead. Install a genuine Zebra™ printhead to continue.
	STATUS light flashing red The printer is unable to read the dpi setting of the printhead.

Table 5 • Status of Printer As Shown by Indicator Lights (Continued)

Printers with a ZebraNet wired Ethernet option	
	NETWORK light off No Ethernet link is available.
	NETWORK light steady green A 100Base-T link was found.
	NETWORK light steady yellow A 10Base-T link was found.
	NETWORK light steady red An Ethernet error condition exists. The printer is not connected to your network.
Printers with a ZebraNet wireless option	
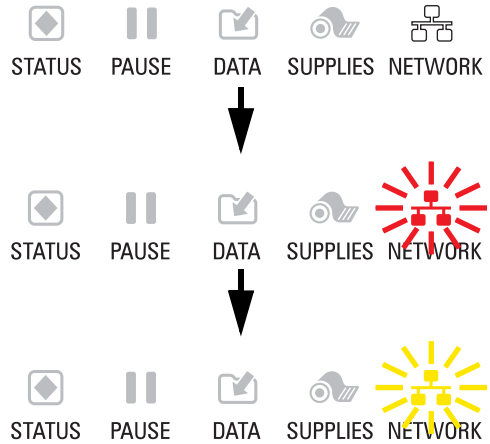	*NETWORK light off* A radio was found during power-up. The printer is attempting to associate with the network. The light flashes red while the printer associates with the network. The light then flashes yellow while the printer is authenticating with the network.
	NETWORK light steady green The radio is associated with your network and authenticated, and the WLAN signal is strong.
	NETWORK light flashing green WLAN—The radio is associated with your network and authenticated, but the WLAN signal is weak.
	NETWORK light steady red A WLAN error condition exists. The printer is not connected to your network.

Troubleshooting

Alerts and Error Messages

Display/ Indicator Lights	Possible Causes	Recommended Solutions
HEAD OPEN CLOSE HEAD STATUS light steady red PAUSE light steady yellow	The printhead is not fully closed.	Close the printhead completely.
	The printhead open sensor is not working properly.	Call a service technician to replace the sensor.
MEDIA OUT LOAD MEDIA STATUS light steady red SUPPLIES light steady red	The media is not loaded or is loaded incorrectly.	Load media correctly. See *Load the Media* on page 30.
	Misaligned media sensor.	Check the position of the media sensor.
	The printer is set for noncontinuous media, but continuous media is loaded.	1. Install the proper media type, or reset printer for the current media type. 2. Calibrate the printer. See *Calibrate the Ribbon and Media Sensors* on page 177.
WARNING RIBBON IN STATUS light steady yellow SUPPLIES light flashing yellow	Ribbon is loaded, but the printer is set for direct thermal mode.	Ribbon is not required with direct thermal media. If you are using direct thermal media, remove the ribbon. This error message will not affect printing.
		If you are using thermal transfer media, which requires ribbon, set the printer for Thermal Transfer mode. See *PRINT METHOD* on page 109.
PH NOT AUTHENTICATED REPLACE PRINTHEAD STATUS light steady red PAUSE light steady red DATA light steady red	The printhead was replaced with one that is not a genuine Zebra™ printhead.	Install a genuine Zebra™ printhead.

Display/ Indicator Lights	Possible Causes	Recommended Solutions
ALERT RIBBON OUT STATUS light steady yellow SUPPLIES light flashing yellow	In thermal transfer mode: • ribbon is not loaded • ribbon is loaded incorrectly • the ribbon sensor is not detecting ribbon • media is blocking the ribbon sensor	1. Load ribbon correctly. See *Load the Ribbon* on page 60. 2. Calibrate the printer. See *Calibrate the Ribbon and Media Sensors* on page 177.
	In thermal transfer mode, the printer did not detect the ribbon even though it is loaded correctly.	1. Print a sensor profile (see *PRINT INFORMATION* on page 117). The ribbon out threshold (**2**) is likely too high, above the line that indicates where the ribbon is detected (**1**). 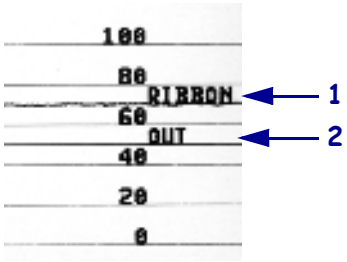 2. Calibrate the printer (see *Calibrate the Ribbon and Media Sensors* on page 177) or load printer defaults (see *LOAD DEFAULTS* on page 122).
	If you are using direct thermal media, the printer is waiting for ribbon to be loaded because it is incorrectly set for thermal transfer mode.	Set the printer for Direct Thermal mode. See *PRINT METHOD* on page 109.

Display/ Indicator Lights	Possible Causes	Recommended Solutions
PRINT HEAD OVERTEMP PRINTING HALTED STATUS light steady yellow	**Caution •** The printhead may be hot enough to cause severe burns. Allow the printhead to cool.	
	The printhead is over temperature.	Allow the printer to cool. Printing automatically resumes when the printhead elements cool to an acceptable operating temperature. If this error persists, consider changing where the printer is located or using a slower print speed.
HEAD COLD PRINTING HALTED THERMISTOR REPLACE PRINTHEAD STATUS light steady yellow The printer shows one of these messages or cycles between them.	**Caution •** An improperly connected printhead data or power cable can cause these error messages. The printhead may be hot enough to cause severe burns. Allow the printhead to cool.	
	The printhead data cable is not properly connected.	Call a service technician to hook up the printhead properly.
	The printhead has a faulty thermistor.	Call a service technician to replace the printhead.
HEAD COLD PRINTING HALTED STATUS light flashing yellow	**Caution •** An improperly connected printhead data or power cable can cause this error message. The printhead may be hot enough to cause severe burns. Allow the printhead to cool.	
	The printhead temperature is approaching its lower operating limit.	Continue printing while the printhead reaches the correct operating temperature. If the error remains, the environment may be too cold for proper printing. Relocate the printer to a warmer area.
	The printhead data cable is not properly connected.	Call a service technician to hook up the printhead properly.
	The printhead has a faulty thermistor.	Call a service technician to replace the printhead.

Display/ Indicator Lights	Possible Causes	Recommended Solutions
CUT ERROR STATUS light steady red PAUSE light steady yellow	**Caution** • The cutter blade is sharp. Do not touch or rub the blade with your fingers.	
	The cutter blade is in the media path.	Turn off the printer power and unplug the printer. Inspect the cutter module for debris and clean as needed following the cleaning instructions in *Clean and Lubricate the Cutter Module* on page 204.
USE USB MEMORY DEVICE? YES NO	The USB host port is disabled, and a USB device was plugged into the port.	To use the USB device, select **YES**, or send the following SGD command to the printer: `! U1 setvar "usb.host.lock_out" "on"`
OUT OF MEMORY STORING GRAPHIC OUT OF MEMORY STORING FORMAT OUT OF MEMORY STORING BITMAP OUT OF MEMORY STORING FONT	There is not enough memory to perform the function specified on the second line of the error message.	Free up some of the printer's memory by adjusting the label format or printer parameters. One way to free up memory is to adjust the print width to the actual width of the label instead of leaving the print width set to the default. See *PRINT WIDTH* on page 111.
		Ensure that the data is not directed to a device that is not installed or is unavailable.
		If the problem persists, call a service technician.

Printing Issues

Barcode Does Not Scan		
Issue	*Possible Cause*	*Recommended Solution*
The barcode printed on a label does not scan.	The barcode is not within specifications because the print is too light or too dark.	Perform the *Optimal Darkness and Speed Test* on page 225. Adjust the darkness or print speed settings as necessary.
	There is not enough blank space around the barcode.	Leave at least 1/8 in. (3.2 mm) between the barcode and other printed areas on the label and between the barcode and the edge of the label.

Print Consistently Too Light or Too Dark		
Issue	*Possible Cause*	*Recommended Solution*
Printing too light or too dark over the entire label	The media or ribbon is not designed for high-speed operation.	Replace supplies with those recommended for high-speed operation. For more information, see http://www.zebra.com/supplies.
	The printer is set at an incorrect darkness level.	For optimal print quality, set the darkness to the lowest possible setting for your application. You may want to perform the *Optimal Darkness and Speed Test* on page 225 to determine the ideal darkness setting. See *DARKNESS* on page 106 for how to change the darkness setting.
	You are using an incorrect combination of media and ribbon for your application.	1. Switch to a different type of media or ribbon to try to find a compatible combination. 2. If necessary, consult your authorized Zebra reseller or distributor for information and advice.
	Incorrect printhead pressure.	Set the printhead pressure to the minimum needed for good print quality. See *Adjust the Printhead Pressure and Toggle Position* on page 183.
Printing too light or too dark on one side of the label	Uneven printhead pressure.	Adjust the printhead pressure as needed for good print quality. See *Adjust the Printhead Pressure and Toggle Position* on page 183.

Poor Print Quality

Issue	*Possible Cause*	*Recommended Solution*
Smudge marks on labels	The media or ribbon is not designed for high-speed operation.	Replace supplies with those recommended for high-speed operation. For more information, see http://www.zebra.com/supplies.
Poor results with thick labels	The print line is not at an optimal position for your media.	Refer to the *Maintenance Manual* for instructions on how to adjust the print line for thick media.
General print quality issues	The printer is set at the incorrect print speed.	For optimal print quality, set the print speed to the lowest possible setting for your application via control panel, the driver, or the software. You may want to perform the *Optimal Darkness and Speed Test* on page 225 to determine the optimal settings for your printer. See *PRINT SPEED* on page 107 for how to change the print speed.
	You are using an incorrect combination of labels and ribbon for your application.	1. Switch to a different type of media or ribbon to try to find a compatible combination. 2. If necessary, consult your authorized Zebra reseller or distributor for information and advice.
	The printer is set at an incorrect darkness level.	For optimal print quality, set the darkness to the lowest possible setting for your application. You may want to perform the *Optimal Darkness and Speed Test* on page 225 to determine the ideal darkness setting. See *DARKNESS* on page 106 for how to change the darkness setting.
	The printhead is dirty.	Clean the printhead and platen roller. See *Clean the Printhead and Platen Roller* on page 200.
	Incorrect or uneven printhead pressure.	Set the printhead pressure to the minimum needed for good print quality. See *Adjust the Printhead Pressure and Toggle Position* on page 183.
	The label format is scaling a font that is not scalable.	Check the label format for font issues.

Angled Gray Lines on Blank Labels

Issue	*Possible Cause*	*Recommended Solution*
Fine, angular gray lines on blank labels	Wrinkled ribbon.	See wrinkled ribbon causes and solutions in *Ribbon Issues* on page 240.

Missing Print		
Issue	*Possible Cause*	*Recommended Solution*
Long tracks of missing print on several labels	Print element damaged.	Call a service technician.
	Wrinkled ribbon.	See wrinkled ribbon causes and solutions in *Ribbon Issues* on page 240.

Loss of Registration		
Issue	*Possible Cause*	*Recommended Solution*
Loss of printing registration on labels. Excessive vertical drift in top-of-form registration.	The platen roller is dirty.	Clean the printhead and platen roller. See *Clean the Printhead and Platen Roller* on page 200.
	Media guides are positioned improperly.	Ensure that the media guides are properly positioned. See *Load the Media* on page 30.
	The media type is set incorrectly.	Set the printer for the correct media type (gap/notch, continuous, or mark). See *MEDIA TYPE* on page 108.
	The media is loaded incorrectly.	Load media correctly. See *Load the Media* on page 30.
Misregistration/skips labels	The printer is not calibrated.	Calibrate the printer. See *Calibrate the Ribbon and Media Sensors* on page 177.
	Improper label format.	Check your label format and correct it as necessary.
Misregistration and misprint of one to three labels	The platen roller is dirty.	Clean the printhead and platen roller. See *Clean the Printhead and Platen Roller* on page 200.
	Media does not meet specifications.	Use media that meets specifications. See *Media Specifications* on page 269.
Vertical drift in top-of-form position	The printer is out of calibration.	Calibrate the printer. See *Calibrate the Ribbon and Media Sensors* on page 177.
	The platen roller is dirty.	Clean the printhead and platen roller. See *Clean the Printhead and Platen Roller* on page 200.

Vertical image or label drift	The printer is using non-continuous labels but is configured in continuous mode.	Set the printer for the correct media type (gap/notch, continuous, or mark—see *MEDIA TYPE* on page 108) and calibrate the printer, if necessary (see *Calibrate the Ribbon and Media Sensors* on page 177).
	The media sensor is calibrated improperly.	Calibrate the printer. See *Calibrate the Ribbon and Media Sensors* on page 177.
	The platen roller is dirty.	Clean the printhead and platen roller. See *Clean the Printhead and Platen Roller* on page 200.
	Improper printhead pressure settings (toggles).	Adjust the printhead pressure to ensure proper functionality. See *Adjust the Printhead Pressure and Toggle Position* on page 183.
	The media or ribbon is loaded incorrectly.	Ensure that the media and ribbon are loaded correctly. See *Load the Ribbon* on page 60 and *Load the Media* on page 30.
	Incompatible media.	You must use media that meets the printer specifications. Ensure that the interlabel gaps or notches are 2 to 4 mm and consistently placed (see *Media Specifications* on page 269).

Ribbon Issues

For videos of some common procedures, go to http://www.zebra.com/zt500-info.

Broken Ribbon		
Issue	*Possible Cause*	*Recommended Solution*
Broken or melted ribbon	Darkness setting too high.	1. Reduce the darkness setting. See *DARKNESS* on page 106 for how to change the darkness setting. 2. Clean the printhead thoroughly. See *Clean the Printhead and Platen Roller* on page 200.
	The ribbon is coated on the wrong side and cannot be used in this printer.	Replace the ribbon with one coated on the correct side. For more information, see *Coated Side of Ribbon* on page 22.
Wrinkled Ribbon		
Issue	*Possible Cause*	*Recommended Solution*
Wrinkled ribbon	Ribbon was loaded incorrectly.	Load the ribbon correctly. See *Load the Ribbon* on page 60.
	Incorrect burn temperature.	For optimal print quality, set the darkness to the lowest possible setting for your application. You may want to perform the *Optimal Darkness and Speed Test* on page 225 to determine the ideal darkness setting. See *DARKNESS* on page 106 for how to change the darkness setting.
	Incorrect or uneven printhead pressure.	Set the printhead pressure to the minimum needed for good print quality. See *Adjust the Printhead Pressure and Toggle Position* on page 183.
	Media not feeding properly; “walking” from side to side.	Make sure that media is snug by adjusting the media guide, or call a service technician.
	The printhead or platen roller may be installed incorrectly.	Call a service technician.

Ribbon Detection Issues		
Issue	*Possible Cause*	*Recommended Solution*
The printer does not detect when the ribbon runs out.	The printer may have been calibrated without ribbon or without the ribbon loaded properly.	**1.** Make sure that ribbon is loaded correctly so that it can be detected by the ribbon sensor. Under the printhead, the ribbon should track all the way back, near the printer's firewall. See *Load the Ribbon* on page 60. **2.** Calibrate the printer. See *Calibrate the Ribbon and Media Sensors* on page 177.
In thermal transfer mode, the printer did not detect the ribbon even though it is loaded correctly.		
The printer indicates that ribbon is out, even though ribbon is loaded correctly.	The printer was not calibrated for the label and ribbon being used.	Calibrate the printer. See *Calibrate the Ribbon and Media Sensors* on page 177.

Communications Issues

Label Formats Not Recognized		
Issue	*Possible Cause*	*Recommended Solution*
A label format was sent to the printer but was not recognized. The DATA light does not flash.	The communication parameters are incorrect.	Check the printer driver or software communications settings (if applicable) for your connection. You may wish to reinstall the printer driver following the instructions in *Install the Printer Driver and Connect the Printer to the Computer* on page 65.
		If you are using serial communication, check the serial port settings. See *PORTS* on page 105.
		If you are using serial communication, make sure that you are using a null modem cable or a null modem adapter.
		Check the printer's handshake protocol setting. The setting used must match the one being used by the host computer. See *HOST HANDSHAKE* on page 169.
A label format was sent to the printer but was not recognized. The DATA light flashes but no printing occurs.	The prefix and delimiter characters set in the printer do not match the ones in the label format.	Verify the prefix and delimiter characters. See *COMMAND CHAR* on page 158 and *DELIMITER CHAR* on page 160.
	Incorrect data is being sent to the printer.	Check the communication settings on the computer. Ensure that they match the printer settings.
		If the problem continues, check the label format.

Labels Stop Printing Correctly		
Issue	*Possible Cause*	*Recommended Solution*
A label format was sent to the printer. Several labels print, then the printer skips, misplaces, misses, or distorts the image on the label.	The serial communication settings are incorrect.	Ensure that the flow control settings match.
		Check the communication cable length. See *General Specifications* on page 262 for requirements.
		Check the printer driver or software communications settings (if applicable).

Miscellaneous Issues

Issues with the Display		
Issue	*Possible Cause*	*Recommended Solution*
The control panel display shows a language that I cannot read	The language parameter was changed through the control panel or a firmware command.	1. On the control panel display, scroll to LANGUAGE Menu. 2. Press OK to access the items in this menu. 3. Use the UP ARROW or DOWN ARROW to scroll through the language selections under the first menu option. The selections for this parameter are displayed in the actual languages to make it easier for you to find one that you are able to read. 4. Select the language that you want to display.
The display is missing characters or parts of characters	The display may need replacing.	Call a service technician.

The USB Host Port Is Not Acknowledging a USB Device		
Issue	*Possible Cause*	*Recommended Solution*
The printer is not acknowledging a USB device or is not reading the files on a USB device that is plugged into the USB host port.	The printer currently supports USB drives only up to 1 TB in size.	Use a USB drive that is 1 TB or smaller.
	The USB device may require its own external power.	If your USB device requires external power, make sure that it is plugged into a working power supply.

Printer Parameters Are Not Set As Expected		
Issue	*Possible Cause*	*Recommended Solution*
Changes in parameter settings did not take effect. OR Some parameters changed unexpectedly.	A firmware setting or command prevented the ability to change the parameter.	Check your label formats or the settings of the software that you use to send formats to the printer. If necessary, refer to the *Programming Guide for ZPL, ZBI, Set-Get-Do, Mirror, and WML* or call a service technician.
	A command in a label format changed the parameter back to the previous setting.	

IP Address Changing

Issue	*Possible Cause*	*Recommended Solution*
My printer reassigns a new IP address to the print server after the printer has been off for a while.	The settings for your network are causing the network to reassign a new IP address.	If the printer changing IP addresses causes issues for you, follow these steps to assign it a static IP address: **1.** Find out what values need to be assigned to the IP address, subnet mask, and gateway for your print server (wired, wireless, or both). **2.** Change the appropriate IP protocol value to PERMANENT. See *WIRED IP PROTOCOL* on page 142 or *WLAN IP PROTOCOL* on page 147. **3.** Change the values for the IP address, subnet mask, and gateway for the appropriate print server to what you want them to remain. Wired: *WIRED IP ADDRESS* on page 139 *WIRED SUBNET MASK* on page 140 *WIRED GATEWAY* on page 141 Wireless: *WLAN IP ADDRESS* on page 144 *WLAN SUBNET MASK* on page 145 *WLAN GATEWAY* on page 146 **4.** Reset the network using *RESET NETWORK* on page 154 to save the changes.

Calibration Issues

Issue	*Possible Cause*	*Recommended Solution*
Auto Calibrate failed.	The media or ribbon is loaded incorrectly.	Ensure that the media and ribbon are loaded correctly. See *Load the Ribbon* on page 60 and *Load the Media* on page 30.
	The sensors could not detect the media or ribbon.	Calibrate the printer manually. See *Calibrate the Ribbon and Media Sensors* on page 177.
	The sensors are dirty or positioned improperly.	Ensure that the sensors are clean and properly positioned.
	The media type is set incorrectly.	Set the printer for the correct media type (gap/notch, continuous, or mark). See *MEDIA TYPE* on page 108.
Non-continuous labels are being treated as continuous labels.	The printer was not calibrated for the media being used.	Calibrate the printer. See *Calibrate the Ribbon and Media Sensors* on page 177.
	The printer is configured for continuous media.	Set the printer for the correct media type (gap/notch, continuous, or mark). See *MEDIA TYPE* on page 108.

Printer Locks Up

Issue	*Possible Cause*	*Recommended Solution*
All indicator lights are on, nothing is on the display, and the printer locks up.	Internal electronic or firmware failure.	Power cycle the printer. If that does not solve the issue, call a service technician.
The printer locks up while booting up.	Main logic board failure.	

Notes •

6

Using a USB Host Port and the NFC Capabilities

This section will help you to learn how to use an optional USB host port on your Zebra printer and how to use the printer's Near Field Communication (NFC) capability. The information is presented in the form of exercises with some SGD commands listed for advanced users.

Note • You are not required to complete these exercises, which may use several tags during printing. The information is included to teach you how the USB host port and NFC capabilities work.

Contents

Items Required for the Exercises 248
Files for Completing the Exercises 248
USB Host 251
Exercise 1: Copy Files to a USB Flash Drive and Perform USB Mirror 251
Exercise 2: Print a Label Format from a USB Flash Drive 253
Exercise 3: Copy Files to/from a USB Flash Drive 254
Exercise 4: Enter Data for a Stored File with a USB Keyboard and Print a Label . . . 256
Near Field Communication (NFC) 257
Exercise 5: Enter Data for a Stored File with a Smart Device and Print a Label 258

Items Required for the Exercises

To perform the exercises in this document, you will need the following:

- a USB Flash drive (sometimes called a “thumb drive” or “memory stick”) that is up to 1 Terabyte (1 TB). The printer will not recognize drives larger than 1 TB.
- a USB keyboard
- the various files attached below
- the free Zebra Utilities app for your smart phone (search for Zebra Tech in the Google Play store)

Files for Completing the Exercises

Most of the actual files that you need to complete the exercises in these section are attached here. Copy these files to your computer before you begin the exercises. Where possible, the contents of the files are shown. The contents of files that contain coded content, which cannot be viewed as text or as an image, are not included.

File 1: ZEBRA.BMP

File 2: SAMPLELABEL.TXT

```
^XA
^FO100,75^XGE:zebra.bmp^FS
^FO100,475^A0N,50,50^FDMirror from USB
Completed^FS
^XZ
```

This simple label format prints the Zebra logo and a line of text at the end of the mirroring exercise.

File 3: LOGO.ZPL

File 4: USBSTOREDFILE.ZPL

```
CT~~CD,~CC^~CT~
^XA~TA012~JSN^LT0^LH0,0^JMA^PR4,4~SD15^LRN^CI0^XZ
~DG000.GRF,07680,024,,[image data]
^XA
^LS0
^SL0
^BY3,3,91^FT35,250^BCN,,Y,N^FC%,{,#^FD%d/%m/%Y^FS
^FT608,325^XG000.GRF,1,1^FS
^FT26,75^A0N,28,28^FH\^FDThis label was printed from a
format stored^FS
^FT26,125^A0N,28,28^FH\^FDon a USB Flash Memory drive. ^FS
^BY3,3,90^FT33,425^BCN,,Y,N
^FD>:Zebra Technologies^FS
^PQ1,0,1,Y^XZ
^XA^ID000.GRF^FS^XZ
```

This label format prints an image and text. This file will be stored on the USB memory device at the root level so that it can be printed.

File 5: VLS_BONKGRF.ZPL

File 6: VLS_EIFFEL.ZPL

File 7: KEYBOARDINPUT.ZPL

```
^XA
^CI28
^BY2,3,91^FT38,184^BCN,,Y,N^FC%,{,#^FD%d/%m/%Y^FS
^FO385,75^XGE:zebra.bmp^FS
^FT40,70^A0N,28,28^FH\^FDThis label was printed using a
keyboard input. ^FS
^FT35,260^A0N,28,28^FH\^FDThis label was printed by:^FS
^FT33,319^A0N,28,28^FN1"Enter Name"^FS
^XZ
```

This label format, used for the USB keyboard input exercise, does the following:

- creates a barcode with the current date, based on your Real-Time Clock (RTC) setting
- prints the Zebra logo graphic
- prints fixed text
- ^FN prompts you to enter your name, and the printer prints what you entered

File 8: SMARTDEVINPUT.ZPL

```
^XA
^CI28
^BY2,3,91^FT38,184^BCN,,Y,N^FC%,{,#^FD%d/%m/%Y^FS
^FO385,75^XGE:zebra.bmp^FS
^FT40,70^A0N,28,28^FH\^FDThis label was printed using a
smart device input. ^FS
^FT35,260^A0N,28,28^FH\^FDThis label was printed by:^FS
^FT33,319^A0N,28,28^FN1"Enter Name"^FS^XZ
```

The same label format as the previous label, only with different text printing. This format is used for the smart device input exercise.

File 9: Firmware File

You may want to download a firmware file for your printer and copy it to your computer for use during the exercises. You may omit doing this if you wish.

You can download the latest firmware file from http://www.zebra.com/firmware.

USB Host

The optional USB host port allows you to connect USB devices—such as a keyboard, scanner, or USB Flash drive—to the printer. The exercises in this section will teach you how to perform USB mirror, how to transfer files to and from the printer, and how to provide information for which you are prompted and then print a label using that information.

Important • When using the USB host port, files should be named only with 1 to 16 alphanumeric characters (A, a, B, b, C, c, ..., 0, 1, 2, 3, ...). Do not use Asian characters, Cyrillic characters, or accented characters in file names.

Some functions may not work properly if there are underscores in a file name. Use periods instead.

Exercise 1: Copy Files to a USB Flash Drive and Perform USB Mirror

1. On your USB Flash Drive, create the following:

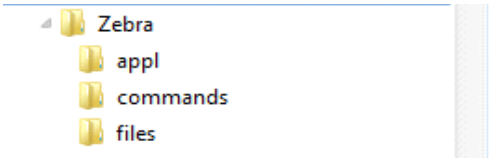

   - a folder called `Zebra`
   - in that folder, three subfolders:
     - `appl`
     - `commands`
     - `files`

2. In the `/appl` folder, place a copy of the latest firmware for your printer.

Note • Some functions may not work properly if there are underscores in a file name. Use periods instead.

3. In the `/files` folder, place the following file:
   - File 1: `ZEBRA.BMP`
4. In the `/commands` folder, place the following files:
   - File 2: `SAMPLELABEL.TXT`
   - File 3: `LOGO.ZPL`
5. Insert the USB Flash drive into a USB host port on the front of your printer.

6. Observe the control panel and wait.

   The following should happen:

   - If the firmware on the USB Flash drive is different than what is on the printer, the firmware downloads to the printer. The printer then restarts and prints a printer configuration label. (If there is no firmware on the USB Flash drive or if the firmware version is the same, the printer skips this action.)
   - The printer downloads the files in the `/files` folder and briefly shows the names of the files that are downloading on the display.
   - The printer executes any files in the `/commands` folder.
   - The printer restarts and then displays the message `MIRROR PROCESSING FINISHED`.

7. Remove the USB Flash drive from the printer.

Advanced User Information

See the *Zebra® Programming Guide* for more information about these commands.

Enable/disable mirroring:

```
! U1 setvar "usb.mirror.enable" "value"
```

Values: `"on"` or `"off"`

Enable/disable automatic mirroring that occurs when a USB Flash drive is inserted into the USB host port:

```
! U1 setvar "usb.mirror.auto" "value"
```

Values: `"on"` or `"off"`

Specify the number of times that the mirror operation will be repeated if it fails:

```
! U1 setvar "usb.mirror.error_retry" "value"
```

Values: `0` to `65535`

Change the path to the location on the USB device from which mirror files are retrieved:

```
! U1 setvar "usb.mirror.appl_path" "new_path"
```

Default: `"zebra/appl"`

Change the path to the location on the printer from which mirror files are retrieved:

```
! U1 setvar "usb.mirror.path" "path"
```

Default: `"zebra"`

Enable/disable the ability to use the USB port:

```
! U1 setvar "usb.host.lock_out" "value"
```

Values: `"on"` or `"off"`

Exercise 2: Print a Label Format from a USB Flash Drive

The Print USB File option allows you to print files from a USB mass storage device, such as a USB Flash drive. Only printable files (`.ZPL` and `.XML`) may be printed from the USB mass storage device, and the files must be located at the root level, not in a directory.

1. Copy the following files to your USB Flash drive:
   - File 4: `USBSTOREDFILE.ZPL`
   - File 5: `VLS_BONKGRF.ZPL`
   - File 6: `VLS_EIFFEL.ZPL`
2. Insert the USB Flash drive into a USB host port on the front of your printer.
3. On the printer's control panel, press the LEFT SELECT button (below the home icon) to access the printer's Home Menu.
4. Use the ARROW buttons to scroll to the Tools menu.
5. Press OK.
6. Use the ARROW buttons to scroll to **PRINT USB FILE**.

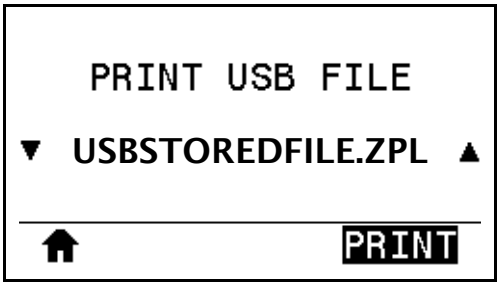

   The printer loads any executable files and processes them. The available files are listed. **SELECT ALL** is available to print all files on the USB Flash drive.
7. If necessary, use the up and down arrow to select `USBSTOREDFILE.zpl`.
8. Press the RIGHT SELECT button to select **PRINT**.

   The label prints.

Exercise 3: Copy Files to/from a USB Flash Drive

The Copy USB File option allows you to copy files from a USB mass storage device to the printer's Flash memory `E:` drive.

1. Copy the following files to the root directory of your USB Flash drive. Do not put these files into a subfolder.
   - File 7: `KEYBOARDINPUT.ZPL`
   - File 8: `SMARTDEVINPUT.ZPL`
2. Insert the USB Flash drive into a USB host port on the front of your printer.
3. On the printer's control panel, press the LEFT SELECT button to access the printer's Home Menu.
4. Use the ARROW buttons to scroll to the Tools menu.
5. Press OK.
6. Use the ARROW buttons to scroll to **COPY USB FILE TO E:**.

   The printer loads any executable files and processes them. The available files are listed. **SELECT ALL** is available to copy all of the available files from the USB Flash drive.
7. If necessary, use the UP or DOWN ARROW to select the file `STOREFMT.ZPL`.
8. Press the RIGHT SELECT button to select **STORE**.

   The printer stores the file in `E:` memory. All file names are converted to uppercase.
9. Repeat this process to select the file `STOREFMTM1.ZPL`.
10. Press the RIGHT SELECT button to select **STORE**.

    The printer stores the file in `E:` memory.

11. Remove the USB Flash drive from the USB host port.

NOTE: You can now copy these files from the printer to a USB Flash drive using the user menu item **STORE E: FILE TO USB**.

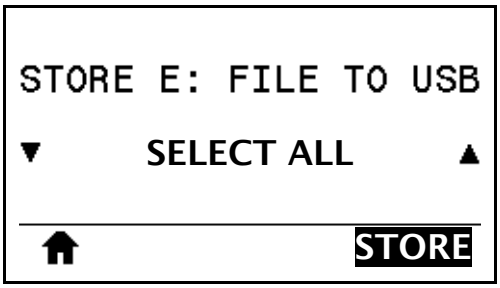

The option **SELECT ALL** is available to store all of the available files from the printer to the USB Flash drive. Any .ZPL file that is copied will be post-processed such that the contents of the file will be suitable to be sent to a printer for normal execution.

Exercise 4: Enter Data for a Stored File with a USB Keyboard and Print a Label

The Print Station feature allows you to use a USB Human Interface Device (HID), such as a keyboard or a barcode scanner, to enter ^FN field data into a *.ZPL template file.

1. After performing the previous exercise, plug a USB keyboard into a USB host port.
2. Use the ARROW buttons to scroll to the Tools menu.
3. Press OK.
4. Use the ARROW buttons to scroll to **PRINT STATION**.

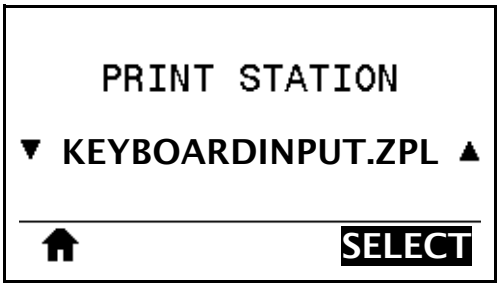

   The printer loads any executable files and processes them. The available files are listed.

5. If necessary, use the UP or DOWN ARROW to select the file KEYBOARDINPUT.ZPL.
6. Press the RIGHT SELECT button to choose **SELECT**.

   The printer accesses the file and prompts you for the information in the ^FN fields in the file. In this case, it prompts you for your name.

7. Type your name, and then press <ENTER>.

   The printer prompts for the number of labels to print.

8. Specify the desired quantity of labels, and then press <ENTER> again.

   The specified number of labels is printed, with your name in the appropriate fields.

Near Field Communication (NFC)

The Zebra Print Touch™ feature allows you to touch an Android™-based, NFC-enabled device (such as a smart phone or tablet) to the printer's NFC logo (Figure 23) to pair the device to the printer. This capability allows you to use your device to provide information for which you are prompted and then print a label using that information.

Important • Some devices may not support NFC communication with the printer until you alter their settings. If you encounter difficulties, consult your service provider or your smart device manufacturer for more information.

Figure 23 • NFC Logo Location

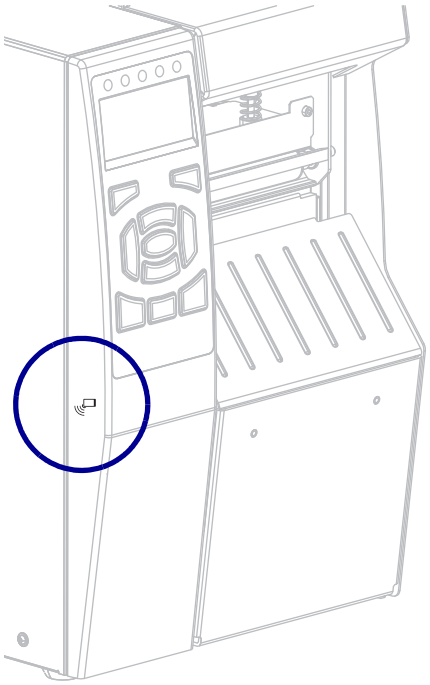

Exercise 5: Enter Data for a Stored File with a Smart Device and Print a Label

Note • The steps in this exercise may vary somewhat based on your smart device, on your service provider, or on whether you already have the free Zebra Utilities app installed on your smart device.

Refer to the *Zebra Bluetooth User Guide* for specific instructions for configuring your printer to use a Bluetooth interface. A copy of this manual is available at http://www.zebra.com/manuals.

1. If you do not have the Zebra Utilities app installed on your device, go to the app store for your device, search for the Zebra Utilities app, and install it.
2. Pair your smart device with the printer by holding the smart device next to the NFC icon on the printer.

   a. If necessary, access the Bluetooth information about your printer using your smart device. For instructions, refer to the manufacturer's documentation for your device.
   b. If necessary, select the Zebra printer's serial number to pair it with the device.
   c. After your smart device has been detected by the printer, the printer may prompt you to accept or reject the pairing. If necessary, press the LEFT SELECT button on the printer to select **ACCEPT**. Some smart devices will pair with the printer without this prompt.

The printer and your device are paired.

3. Start the Zebra Utilities app on your device.
   The Zebra Utilities main menu displays.

4. Perform these steps if you have an Apple device:
   a. Tap the Settings icon in the lower-right corner.
   b. Change the setting for **Get Labels From Printer** to **ON**.
   c. Tap Done.
5. Tap Files.
   The smart device gets data from the printer and displays it.

Note • This retrieval process may take a minute or more to complete.

6. Scroll through the formats shown and select `E:SMARTDEVINPUT.ZPL`.
   Based on the `^FN` field in the label format, the smart device prompts you for your name.
7. Enter your name at the prompt.
8. Change the quantity of labels to print, if desired.
9. Tap **PRINT** to print the label.

Notes •

7

Specifications

This section lists general printer specifications, printing specifications, ribbon specifications, and media specifications.

Contents

General Specifications 262
Power Specifications 265
Power Cord Specifications 266
Wireless Specifications 267
Printing Specifications 268
Media Specifications 269
Ribbon Specifications 270

General Specifications

Height		15.58 in. (395.68 mm)
Width		10.56 in. (268.2 mm)
Depth		20.17 in. (512.3 mm)
Weight		50 lb (22.7 kg)
Temperature	Operating	Thermal Transfer: 40° to 104°F (5° to 40°C) Direct Thermal: 32° to 104°F (0° to 40°C)
	Storage	–22° to 140°F (–30° to 60°C)
Relative Humidity	Operating	20% to 85%, non-condensing
	Storage	20% to 85%, non-condensing
Communication Interface Specifications	Standard	**Bluetooth® LE** Limitations and Requirements Many mobile devices can communicate with the printer within a 30-foot radius of the printer. Connections and Configuration Refer to the *Zebra Bluetooth User Guide* for specific instructions for configuring your printer to use a Bluetooth interface. A copy of this manual is available at http://www.zebra.com/manuals.
		Zebra PrintTouch/Near Field Communication (NFC) See *Using a USB Host Port and the NFC Capabilities* on page 247 for more information. Limitations and Requirements NFC communication must be initiated by touching your device to the appropriate location on the printer. Connections and Configuration Some devices may not support NFC communication with the printer until you alter their settings.
		USB 2.0 Data Interface Limitations and Requirements • Maximum cable length of 16.4 ft (5 m). Connections and Configuration No additional configuration is necessary.
	(Continued on next page.)	

Communication Interfaces (continued)	Standard (continued)	**Wired Gigabit Internal Ethernet Print Server** Limitations and Requirements • The printer must be configured to use your LAN. • A second wired print server can be installed in the bottom option slot. Connections and Configuration Refer to the *ZebraNet Wired and Wireless Print Servers User Guide* for configuration instructions. A copy of this manual is available at http://www.zebra.com/manuals.
		RS-232/C Serial Data Interface • 2400 to 115000 baud • parity, bits/character • 7 or 8 data bit • XON-XOFF, RTS/CTS, or DTR/DSR handshake protocol required • 750mA at 5 V from pins 1 and 9 Limitations and Requirements • You must use a null-modem cable to connect to the printer or a null-modem adapter if using a standard modem cable. • Maximum cable length of 50 ft (15.24 m). • You may need to change printer parameters to match the host computer. Connections and Configuration The baud rate, number of data and stop bits, the parity, and the XON/XOFF or DTR control must match those of the host computer.
	Optional	**Wireless print server** See *Wireless Specifications* on page 267 for more information. Limitations and Requirements • Can print to the printer from any computer on your Wireless Local Area Network (WLAN). • Can communicate with the printer through the printer's web pages. • The printer must be configured to use your WLAN. • Can be installed only in the top option slot. Configuration Refer to the *ZebraNet Wired and Wireless Print Servers User Guide* for configuration instructions. A copy of this manual is available at http://www.zebra.com/manuals.

Communication Interfaces (continued)	Optional (continued)	**USB host port** See *Using a USB Host Port and the NFC Capabilities* on page 247 for more information. Limitations and Requirements You can only plug one device into the USB host port. You cannot use a third device by plugging it into a USB port on one of the devices, nor can you use an adapter to split the USB host port on the printer to accept more than one device at a time. Connections and Configuration No additional configuration is necessary.
		IEEE 1284 Bidirectional Parallel data interface Limitations and Requirements • Maximum cable length of 10 ft (3 m). • Recommended cable length of 6 ft (1.83 m). • No printer parameter changes required to match the host computer. • Can be installed in either the top or bottom option slot. Connections and Configuration No additional configuration is necessary.
		External ZebraNet 10/100 Print Server Requires the parallel data interface option
Memory		1 Gigabyte DRAM (32 MB user available) 2 Gigabyte Flash (512 MB user available on-board Flash)

Power Specifications

Electrical	100–240 VAC, 50-60 Hz
Power consumption	120 VAC, 60 Hz
Inrush Current (Irms)	37.0
Energy Star Off Power (W)	0.05
Energy Star Sleep Power (W)	< 5
Print Power (Watts)	123.0
Print Power (VA)	130.0

Power Cord Specifications

Caution • For personnel and equipment safety, always use an approved three-conductor power cord specific to the region or country intended for installation. This cord must use an IEC 320 female connector and the appropriate region-specific, three-conductor grounded plug configuration.

Depending on how your printer was ordered, a power cord may or may not be included. If one is not included or if the one included is not suitable for your requirements, see Figure 24 for specifications.

Figure 24 • Power Cord Specifications

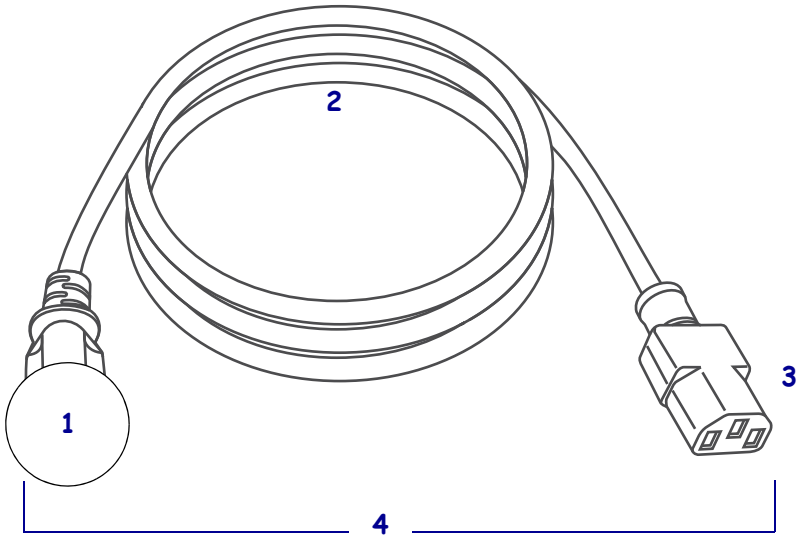

1	AC power plug for your country—This should bear the certification mark of at least one of the known international safety organizations (Figure 25). The chassis ground (earth) **must** be connected to ensure safety and reduce electromagnetic interference.
2	3-conductor HAR cable or other cable approved for your country.
3	IEC 320 connector—This should bear the certification mark of at least one of the known international safety organizations (Figure 25).
4	Length ≤ 9.8 ft. (3 m). Rating 10 Amp, 250 VAC.

Figure 25 • International Safety Organization Certification Symbols

Wireless Specifications

Antenna Information
• Type = Patch; Gain = 3.66dBi @ 2.4GHz; Gain = 3.19dBi @ 5GHz; Impedance = 50 ohms • Type = Omni directional antenna; Gain 3dBi @ 2.4GHz; 5dBi @ 5GHz

WLAN Specifications	
802.11 b • 2.4 GHz • DSSS (DBPSK, DQPSK and CCK) • RF power 17.77 dBm (EIRP) 802.11 g • 2.4 GHz • OFDM (16-QAM and 64-QAM with BPSK and QPSK) • RF power 18.61 dBm (EIRP) 802.11 n • 2.4 GHz • OFDM (16-QAM and 64-QAM with BPSK and QPSK) • RF power 18.62 dBm (EIRP) 802.11 a/n • 5.15-5.25 GHz, 5.25-5.35 GHz, 5.47-5.725 GHz • OFDM (16-QAM and 64-QAM with BPSK and QPSK) • RF power 17.89 dBm (EIRP) 802.11 ac • 5.15-5.25 GHz, 5.25-5.35 GHz, 5.47-5.725 GHz • OFDM (16-QAM and 64-QAM with BPSK and QPSK) • RF power 13.39 dBm (EIRP)	Bluetooth 4.1 + Low Energy (LE) • 2.4 GHz • FHSS(BDR/EDR), GFSK (Bluetooth Low Energy) • RF power 9.22 dBm (EIRP) Bluetooth Low Energy (LE) • 2.4 GHz • FHSS(BDR/EDR), DSSS (Bluetooth LE) • RF power –0.85 dBm (EIRP)

Printing Specifications

Print resolution		203 dpi (dots/in.)/8 dots/mm
		300 dpi/12 dots/mm
Maximum print width		4.09 in. (104 mm)
Programmable constant print speeds (inches per second/ips or millimeters per second)	203 dpi	2 to 12 in. (50.8 to 304.8 mm) per second in 1-in. (25.4 mm) increments
	300 dpi	2 to 10 in. (50.8 to 254.0 mm) per second in 1-in. (25.4 mm) increments
Dot size (nominal) (width x length)	203 dpi	0.0049 in. x 0.0049 in. (0.125 mm x 0.125 mm)
	300 dpi	0.0033 in. x 0.0039 in. (0.084 mm x 0.099 mm)
First dot location (measured from the inside edge of the media)	203 dpi	0.14 in. ±0.05 in. (3.5 mm ±1.25 mm)
	300 dpi	0.08 in. ±0.05 in. (2.1 mm ±1.25 mm)
Barcode modulus (X) dimension		
Picket fence (non-rotated) orientation	203 dpi	4.9 mil to 49 mil
	300 dpi	3.3 mil to 33 mil
Ladder (rotated) orientation	203 dpi	4.9 mil to 49 mil
	300 dpi	3.9 mil to 39 mil
Vertical registration	6 ips	±0.75 mm
	> 6 ips	±1.5 mm
Horizontal registration		±1.5 mm

Media Specifications

Label length MINIMUM	Tear-off	0.7 in. (18 mm)
	Rewind	0.25 in (6 mm)
	Peel-off	0.5 in (13 mm)
	Cutter	1.5 in. (38 mm)
Label length MAXIMUM (non-continuous media)		39 in. (991 mm)
Print length MAXIMUM (continuous media)	200 dpi	150 in. (3810 mm)
	300 dpi	100 in. (2540 mm)
Label width MINIMUM		0.79 in. (20 mm)
Label width MAXIMUM (label and liner)		4.5 in. (114 mm)
Total thickness MINIMUM (includes liner, if any)		0.003 in. (0.076 mm)
Total thickness MAXIMUM (includes liner, if any)	Cutter	0.009 in. (0.23 mm)
	Other	0.012 in. (0.30 mm)
Roll outside diameter MAXIMUM		8 in. (203 mm) on a 3-in. (76-mm) inside diameter core
Inter-label gap	Minimum	0.079 in. (2 mm)
	Preferred	0.118 in. (3 mm)
	Maximum	0.157 in. (4 mm)
Ticket/tag notch size (width x length)		0.25 in. x 0.12 in. (6 mm x 3 mm)
Sensing hole diameter		0.125 in. (3 mm)
Black mark density, in Optical Density Units (ODU)		> 1.0 ODU
Media density MAXIMUM (black mark)		0.5 ODU
Black mark length (parallel to inside media edge)		0.12 to 0.43 in. (3 to 11 mm)
Black mark width (perpendicular to inside media edge)		> 0.43 in. (> 11 mm)
Black mark location		within 0.040 in. (1 mm) of inside media edge

Ribbon Specifications

Standard printers use ribbon that is coated on the outside. An optional ribbon spindle is available to use ribbon that is coated on the inside. Contact your authorized Zebra reseller for ordering information.

Ribbon width MINIMUM*	0.79 in. (20 mm)
Ribbon width MAXIMUM	4.33 in. (110 mm)
Ribbon length MAXIUMUM	1476 ft (450 m)
Ribbon core inside diameter	1 in. (25 mm)
Ribbon roll outside diameter MAXIMUM	3.2 in. (81.3 mm)

* Zebra recommends using ribbon that is at least as wide as the media to protect the printhead from wear.

** Depending on your application, you may be able to use ribbon narrower than 2 in. (51 mm), as long as the ribbon is wider than the media being used. To use a narrower ribbon, test the ribbon's performance with your media to assure that you get the desired results.

Glossary

alphanumeric Indicating letters, numerals, and characters such as punctuation marks.

backfeed When the printer pulls the media and ribbon (if used) backward into the printer so that the beginning of the label to be printed is properly positioned behind the printhead. Backfeed occurs when operating the printer in Tear-Off and Applicator modes.

barcode A code by which alphanumeric characters can be represented by a series of adjacent stripes of different widths. Many different code schemes exist, such as the universal product code (UPC) or Code 39.

black mark media Media with registration marks found on the underside of the print media that act as start-of-label indications for the printer. The reflective media sensor is typically the best choice for use with black mark media.

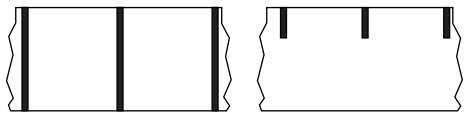

Contrast this with *continuous media* or *gap/notch media*.

calibration (of a printer) A process in which the printer determines some basic information needed to print accurately with a particular media and ribbon combination. To do this, the printer feeds some media and ribbon (if used) through the printer and senses whether to use the direct thermal or thermal transfer print method, and (if using non-continuous media) the length of individual labels or tags.

configuration The printer configuration is a group of operating parameters specific to the printer application. Some parameters are user selectable, while others are dependent on the installed options and mode of operation. Parameters may be switch selectable, control panel programmable, or downloaded as ZPL II commands. A configuration label listing all the current printer parameters may be printed for reference.

continuous media Label or tag-stock media that does not have gaps, holes, notches, or black marks to indicate label separations. The media is one long piece of material wound into a roll. This allows the image to be printed anywhere on the label. Sometimes a cutter is used to cut apart individual labels or receipts. Contrast this with *black mark media* or *gap/notch media*.

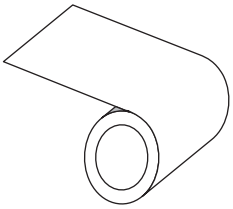

core diameter The inside diameter of the cardboard core at the center of a roll of media or ribbon.

diagnostics Information about which printer functions are not working that is used for troubleshooting printer problems.

die-cut media A type of label stock that has individual labels stuck to a media liner. The labels may be either lined up against each other or separated by a small distance. Typically the material surrounding the labels has been removed. (See *non-continuous media*.)

direct thermal A printing method in which the printhead presses directly against the media. Heating the printhead elements causes a discoloration of the heat-sensitive coating on the media. By selectively heating the printhead elements as the media moves past, an image is printed onto the media. No ribbon is used with this printing method. Contrast this with *thermal transfer*.

direct thermal media Media that is coated with a substance that reacts to the application of direct heat from the printhead to produce an image.

dynamic RAM The memory devices used to store the label formats in electronic form while they are being printed. The amount of DRAM memory available in the printer determines the maximum size and number of label formats that can be printed. This is volatile memory that loses the stored information when power is turned off.

fanfold media Non-continuous media that comes folded in a rectangular stack. Fanfold media is either gap/notch or black mark media. Contrast this with *roll media*.

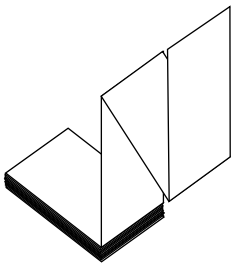

firmware This is the term used to specify the printer's operating program. This program is downloaded to the printer from a host computer and stored in FLASH memory. Each time the printer power is turned on, this operating program starts. This program controls when to feed the media forward or backward and when to print a dot on the label stock.

FLASH memory FLASH memory is non-volatile and maintains the stored information intact when power is off. This memory area is used to store the printer's operating program. In addition, this memory can be used to store optional printer fonts, graphic formats, and complete label formats.

Font A complete set of alphanumeric characters in one style of type. Examples include CG Times™, CG Triumvirate Bold Condensed™.

gap/notch media Media that contains a separation, notch, or hole, indicating where one label/printed format ends and the next one begins. Contrast this with *black mark media* or *continuous media*.

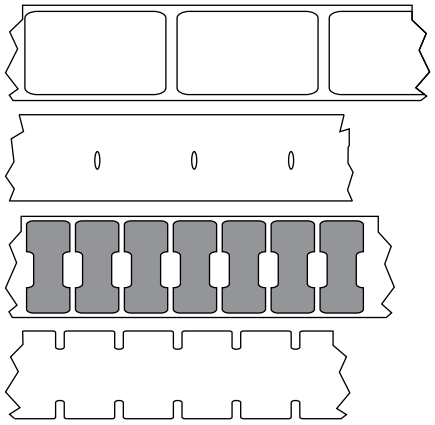

ips (inches-per-second) The speed at which the label or tag is printed. Many Zebra printers can print from 1 ips to 14 ips.

label An adhesive-backed piece of paper, plastic, or other material on which information is printed. A non-continuous label has a defined length, as opposed to a continuous label or a receipt, which can have a varying length.

label backing (liner) The material on which labels are affixed during manufacture and which is discarded or recycled by the end-users.

light emitting diode (LED) Indicators of specific printer status conditions. Each LED is either off, on, or blinking depending on the feature being monitored.

linerless media Linerless media does not use backing to keep the layers of labels on a roll from sticking to one another. It is wound like a roll of tape, with the sticky side of one layer in contact with the non-sticky surface of the one below it. Individual labels may be separated by perforations, or they can be cut apart. Because there is no liner, more labels can potentially fit on a roll, cutting down the need to change media as often. Linerless media is considered an environmentally friendly option because no backing is wasted, and the cost per label can be considerably less than that of standard labels.

liquid crystal display (LCD) The LCD is a back-lit display that provides the user with either operating status during normal operation or option menus when configuring the printer to a specific application.

mark media See *black mark media*.

media Material onto which data is printed by the printer. Types of media include: tag stock, die-cut labels, continuous labels (with and without media liner), non-continuous media, fanfold media, and roll media.

media sensor This sensor is located behind the printhead to detect the presence of media and, for non-continuous media, the position of the web, hole, or notch used to indicate the start of each label.

media supply hanger The stationary arm that supports the media roll.

non-continuous media Media that contains an indication of where one label/printed format ends and the next one begins. Gap/notch media and black mark media are types of non-continuous media. Contrast this with *continuous media*.

non-volatile memory Electronic memory that retains data even when the power to the printer is turned off.

notched media A type of tag stock containing a cutout area that can be sensed as a start-of-label indicator by the printer. This is typically a heavier, cardboard-like material that is either cut or torn away from the next tag. See *gap/notch media*.

peel-off A mode of operation in which the printer peels a printed label away from the backing and allows the user to remove it before another label is printed. Printing pauses until the label is removed.

perforated media Media with perforations that allow the labels or tags to be separated from each other easily. The media may also have black marks or other separations between labels or tags.

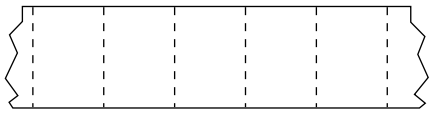

print speed The speed at which printing occurs. For thermal transfer printers, this speed is expressed in terms of ips (inches per second).

printhead wear The degradation of the surface of the printhead and/or the print elements over time. Heat and abrasion can cause printhead wear. Therefore, to maximize the life of the printhead, use the lowest print darkness setting (sometimes called burn temperature or head temperature) and the lowest printhead pressure necessary to produce good print quality. In the thermal transfer printing method, use ribbon that is as wide or wider than the media to protect the printhead from the rough media surface.

receipt A receipt is a variable length printout. One example of a receipt is in retail stores, where each purchased item occupies a separate line on the printout. Therefore, the more items purchased, the longer the receipt.

registration Alignment of printing with respect to the top (vertical) or sides (horizontal) of a label or tag.

Radio frequency identification (RFID) “smart” media
Each RFID label has an RFID transponder (sometimes called an “inlay”), made of a chip and an antenna, embedded between the label and the liner. The shape of the transponder varies by manufacturer and is visible through the label. All “smart” labels have memory that can be read, and many have memory that can be encoded.

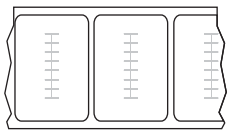

RFID media can be used in a printer that is equipped with an RFID reader/encoder. RFID labels are made from the same materials and adhesives as non-RFID labels.

ribbon Ribbon is a thin film that is coated on one side with wax, resin, or wax resin (usually called “ink”), which is transferred to the media during the thermal transfer process. Ink is transferred onto the media when heated by the small elements within the printhead.

Ribbon is only used with the thermal transfer print method. Direct thermal media does not use ribbon. When ribbon is used, it must be as wide as or wider than the media being used. If the ribbon is narrower than the media, areas of the printhead are unprotected and subject to premature wear. Zebra ribbons have a coating on the back that protects the printhead from wear.

ribbon wrinkle A wrinkling of the ribbon caused by improper alignment or improper printhead pressure. This wrinkle can cause voids in the print and/or the used ribbon to rewind unevenly. This condition should be corrected by performing adjustment procedures.

roll media Media that comes supplied rolled onto a core (usually cardboard). Contrast this with *fanfold media*.

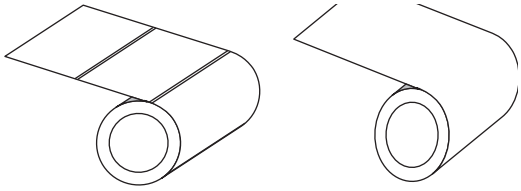

supplies A general term for media and ribbon.

symbology The term generally used when referring to a barcode.

tag stock A type of media having no adhesive backing but featuring a hole or notch by which the tag can be hung on something. Tags are usually made of cardboard or other durable material and are typically perforated between tags. Tag stock can come on rolls or in a fanfold stack. See *gap/notch media*.

tear-off A mode of operation in which the user tears the label or tag stock away from the remaining media by hand.

thermal transfer A printing method in which the printhead presses an ink or resin coated ribbon against the media. Heating the printhead elements causes the ink or resin to transfer onto the media. By selectively heating the printhead elements as the media and ribbon move past, an image is printed onto the media. Contrast this with *direct thermal*.

void A space on which printing should have occurred, but did not due to an error condition such as wrinkled ribbon or faulty print elements. A void can cause a printed barcode symbol to be read incorrectly or not at all.

Notes •

Index

A

adhesive test for ribbon coating, 23
adjustments
  label left position, 114
  label top position, 113
  maximum label length, 116
  media sensors, 188
  print darkness, 106
  print width, 111
  printhead pressure or toggle location, 183
  tear-off position, 110
alternate TCP port number, 153
Asset Visibility Service, 155

B

barcodes
  barcode does not scan, 236
  barcodes label, 117
  determining "in-spec" barcodes, 217
battery disposal, 213
baud rate, 166
black mark media
  selecting media type, 108
  specifications, 269
Bluetooth
  address, 171
  characteristics and limitations, 262
  connection status to paired device, 174
  device type (slave or master), 172
  discovery on/off, 173
  minimum security level, 176
  specification version, 175
  using Print Touch feature, 257
broken ribbon, 240
buttons on control panel, 18

C

calibration
  Auto Calibrate failed, 245
  how to set as head-close action, 121
  how to set as power-up action, 120
  procedure, 177
  SHORT CAL
    how to set for head-close action, 121
    how to set for power-up action, 120
  ways to initiate, 124
Canadian DOC compliance, 4
CANCEL button, 18
CANCEL self test, 118
changing printer parameters, 105
channel (wireless network), 150
cleaning
  cutter module, 204
  exterior of printer, 199
  media compartment, 199
  printhead and platen roller, 200
  recommended cleaning schedule, 198
  sensors, 199
command character, 158
command language, 157
communication diagnostics mode
  how to initiate, 125
  overview, 227
communication interfaces, 65
communications problems, 242

configuration label
print through Zebra Setup Utilities, 100
various ways to print, 117
conformity declaration, 3
connecting printer to computer or network, 65
continuous media, 272
selecting media type, 108
control character, 159
control panel
button function, 18
error messages, 232
location, 14
navigation, 19
customer support, 26
Cutter mode
cleaning the cutter module, 204
CUT ERROR message, 235
final media loading steps, 55
how to select, 112
preliminary media loading steps, 30

D

darkness
adjustments, 106
finding optimal setting, 225
print quality too light or too dark, 236
print test labels, 136, 220
data bits, 167
data cables, 17
data source
connections, 65
site selection considerations, 28
declaration of conformity, 3
default gateway
wired, 141
wireless, 146
default reset, 122
delimiter character, 160
diagnostic mode
how to initiate, 125
overview, 227
diagnostics, 219
Direct Thermal mode
media scratch test, 22
setting, 109
display
display language, 156
how to change from unfamiliar language, 243
location on control panel, 18
missing characters, 243
printing from the display, 134
disposal of printer parts, 213
driver installation, 65

E

electrical specifications, 265
electronics cover, 14
element out test labels
how to print, 136
sample, 224
enable ZBI, 128
Energy Star mode
setting, 126
environmental conditions, 262
error messages, 232
ESSID, 149
Ethernet
connecting to a wired network, 86
connecting to a wireless network, 94
external view of printer, 14

F

factory defaults, 122
fanfold media, 272
loading, 31
FCC compliance, 4
FCC radiation exposure limits, 4
FEED + PAUSE self test, 123
feed a label
FEED button, 18
how to set as head-close action, 121
how to set as power-up action, 120
FEED button
FEED self test, 225
location, 18
first dot location test labels
how to print, 136
sample label, 221
fonts label, 117
formats label, 117

G

gap/notch
media definition, 273
selecting media type, 108
ways to select media sensor type, 163
gateway
wired, 141
wireless, 146

H

HEAD COLD message
  cycling with other messages, 234
  displaying alone, 234
HEAD OPEN message, 232
head-close action, 121
Home menu, 21
horizontal registration, 268
host handshake, 169
Human Input Device (HID) use, 134

I

idle display
  accessing the Home menu from the Idle Display, 19
  how to change what displays, 119
  information shown, 21
image compression test labels
  how to print, 136
  sample, 223
images distorted on labels, 242
images label, 117
indicator lights
  combined with error message, 232
  location, 18
  troubleshooting, 230
initiate manual calibration, 124
inspect for shipping damage, 26
IP addresses
  wired print server, 139
  wireless print server, 144
IP resolution (IP protocol)
  wired, 142
  wireless, 147

L

label left position adjustment, 114
label length
  how to set maximum, 116
  specifications, 269
label sensor sensitivity, 164
label top position adjustment, 113
label width
  how to set, 111
  specifications, 269
labels did not print, 242
language
  how to change from unfamiliar language, 243
  languages supported on display, 156
last saved settings, 122
LCD error messages, 232
LENGTH
  how to set as head-close action, 121
  how to set as power-up action, 120
liability, 2
Liner Take-Up mode
  final media loading steps, 39
  how to select, 112
  preliminary media loading steps, 30
load defaults, 122
location for printer, 28
lubrication, 213

M

MAC address
  wired, 143
  wireless, 148
manual calibration
  procedure, 177
  ways to initiate, 124
maximum label length
  how to set, 116
  specifications, 269
media
  black mark’black mark media
      definition, 271
  continuous, 272
  fanfold, 272
  loading, 30
  ordering, 213
  RFID “smart” labels, 274
  specifications, 269
media door, 14
MEDIA OUT message, 232
media scratch test, 22
media sensor
  adjustments, 188
media sensor calibration
  procedure, 177
  ways to initiate, 124
media sensor selection, 163
media type selection, 108
melted ribbon, 240
memory, 264
menu structure, 105
mirroring, 251
misregistration of labels, 238
missing print on labels, 238

N

navigation, 19
Near Field Communication (NFC), 257
  limitations and requirements, 262
network configuration label
  various ways to print, 117
network defaults, 122
network settings
  load defaults, 122
  reset network, 154
NO MOTION
  how to set as head-close action, 121
  how to set as power-up action, 120
non-continuous media
  problem with labels, 245
  selecting media type, 108

O

operating conditions, 28
ordering replacement parts, 213
ordering ribbon and media, 213
OUT OF MEMORY message, 235

P

parallel port
  characteristics of parallel connection, 264
  connecting the printer to a computer, 78
parity, 168
password, 135
PAUSE button, 18
PAUSE self test, 136
Peel-Off mode
  final media loading steps, 39
  how to select, 112
  preliminary media loading steps, 30
perforated media, 274
PH NOT AUTHENTICATED message, 232
power
  power cord specifications, 266
  site selection, 28
  specifications, 265
Power-On Self Test (POST)
  printer locks up during POST, 245
power-up action, 120
primary TCP port number, 152
print darkness setting, 106
PRINT HEAD OVERTEMP message, 234
print information menu item, 117
print line test labels
  how to print, 136
  sample, 222
print method specification, 109
print mode selection, 112
print quality
  barcode does not scan, 236
  darkness and print speed optimization, 225
  printhead pressure adjustment, 183
  troubleshooting, 236
print server
  channel, 150
  default wired gateways, 141
  default wireless gateways, 146
  ESSID, 149
  IP protocol (wired), 142
  IP protocol (wireless), 147
  network configuration label, 117
  reset network settings, 154
  select primary print server, 138
  signal, 151
  view active print server, 137
  wired IP addresses, 139
  wired MAC address, 143
  wireless IP addresses, 144
  wireless MAC address, 148
print speed
  finding optimal setting, 225
  how to specify, 107
  specifications, 268
PRINT STATION menu item, 134
print test format, 136
Print Touch feature, 257
print width
  adjustment, 111
  specifications, 268
printer configuration label, 117
printer diagnostics, 219
printer driver, 65
printer locks up, 245
printer memory, 264
printer parameters, 105
printer settings
  darkness, 106
  label left position, 114
  label top position, 113
  maximum label length, 116
  media type, 108
  print method, 109
  print mode, 112
  print width, 111
  reprint mode, 115
  settings not taking effect, 243
  tear-off position, 110

printhead
adjust printhead pressure or toggle location, 183
HEAD COLD message
cycling with other messages, 234
displaying alone, 234
how to clean, 200
PH NOT AUTHENTICATED message, 232
PRINT HEAD OVERTEMP message, 234
THERMISTOR PREPLACE PRINTHEAD message, 234

Q

QR codes with error messages, 216
QuickHelp pages, 216

R

radiation exposure limits, 4
recycling printer parts, 213
reflective sensor selection, 163
registration, 268
registration loss during printing, 238
reinitialize printer server, 122
relative humidity
operating, 28
operating and storage, 262
reload last saved settings, 122
replacement parts, 213
report shipping damage, 26
reprint mode, 115
reset network settings, 154
reset printer to default values, 122
reset to defaults, 122
Rewind mode
description and media path, 29
final media loading steps, 47
preliminary media loading steps, 30
RFID “smart” labels, 274
ribbon
adhesive test, 23
broken or melted ribbon, 240
determining coated side, 22
loading, 60
ordering, 213
removal, 191
ribbon not detected correctly, 241
scratch test, 23
setting Thermal Transfer mode, 109
specifications, 270
when to use, 22
wrinkled ribbon, 240
RIBBON IN message, 232
RIBBON OUT message, 233
ribbon sensor calibration
procedure, 177
ways to initiate, 124
roll media
loading, 31
routine cleaning schedule, 198
run a ZBI program, 129

S

scanner input, 134
scratch test
media type, 22
ribbon coated side, 23
self tests, 219
communication diagnostics, 227
FEED, 225
sensor profile, 117
sensor type selection, 163
sensors
interpreting sensor profile, 228
transmissive (media) sensor adjustment, 188
transmissive sensor selection, 163
serial port
connecting the printer to a computer, 78
limitations and requirements, 263
servicing the printer, 26
setup
install the printer driver, 65
unpack the printer, 26
shipping
report damage, 26
reshipping the printer, 27
SHORT CAL
how to set as head-close action, 121
how to set as power-up action, 120
signal, 151
site selection for printer, 28
skipped labels, 242
sleep mode
power consumption, 265
setting Energy Star mode, 126
“smart” labels, 274
smart phone
QuickHelp pages, 216
using Print Touch feature, 257
smudge marks on labels, 237
spacing requirements, 28
stop a ZBI program, 130
storing the printer, 26

subnet mask
  wired, 140
  wireless, 145
supplies, 213
surface for printer, 28

T

take label sensor intensity, 165
TCP port number
  alternate, 153
  primary, 152
Tear-Off mode
  final media loading steps, 34
  how to select, 112
  preliminary media loading steps, 30
tear-off position adjustment, 110
technical support, 26
temperature
  operating, 28
  operating and storage, 262
Thermal Transfer mode
  media scratch test, 22
  setting, 109
THERMISTOR REPLACE PRINTHEAD message, 234
toggle adjustment, 183
transmissive (media) sensor
  adjustment, 188
transmissive sensor selection, 163
troubleshooting
  communications problems, 242
  diagnostic tests, 219
  error messages, 232
  indicator lights, 230
  print quality problems, 236
  ribbon problems, 240

U

unpack the printer, 26
USB host
  copy configuration information to USB device, 127
  copy files and perform USB mirror, 251
  copy files from a Flash drive, 132
  copy files to/from USB Flash drive, 254
  enter data with USB keyboard, 256
  file naming conventions, 251
  files required for exercises, 248
  print a label format from the display, 134
  print label format from USB Flash drive, 253
  printer does not recognize USB device, 243
  store files on a Flash drive, 133
USB keyboard input, 134
USB mirror, 251
USB port
  connecting the printer to a computer, 74
  limitations and requirements, 262
  specifications, 262
USB scanner input, 134
user menus, 105

V

ventilation requirements, 28
vertical drift in top-of-form position, 238
vertical registration, 268
virtual device, 162
Visibility Agent, 155

W

wired print server
  limitations and requirements, 263
  See also print server
Wireless Markup Language (WML) version, 170
wireless print server
  channel, 150
  ESSID, 149
  limitations and requirements, 263
  signal, 151
  specifications, 267
wrinkled ribbon causes, 240

Z

Zebra Basic Interpreter (ZBI)
  enable, 128
  run a ZBI program, 129
  stop a ZBI program, 130
Zebra Global Customer Support, 26
Zebra Printer Connector, 155
Zebra Setup Utilities
  installation, 65
  print a test label, 100
ZebraDesigner, 102
ZPL mode, 161